| DIST | COUNTY | ROUTE | KILOMETER POST TOTAL PROJECT | SHEET No | TOTAL SHEETS |
|---|---|---|---|---|---|
| 04 | SF | 80 | 13.2/13.9 | 208R1 | 1204 |

Caltrans Metric

Jens Erlingsson 12/19/02
REGISTERED ELECTRICAL ENGINEER DATE

12-6-04
PLANS APPROVAL DATE

REGISTERED PROFESSIONAL ENGINEER
JENS ERLINGSSON
No. 8249
Exp. 9/30/06
ELECTRICAL
STATE OF CALIFORNIA

PB POWER, Inc.
A Parsons Brinckerhoff Company
303 Second St., Suite 700N
San Francisco, CA 94107-1317

*The State of California or its officers or agents shall not be responsible for the accuracy or completeness of electronic copies of this plan sheet.*

*Caltrans now has a web site! To get to the web site, go to http://www.dot.ca.gov*

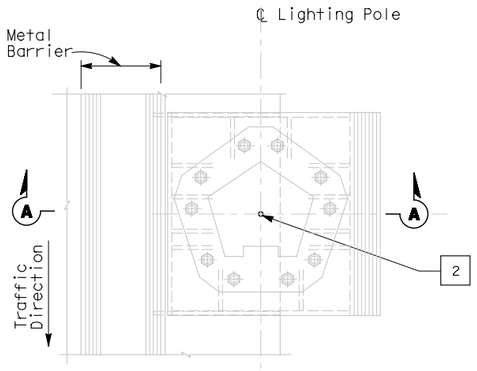


## PLAN
TYPICAL CONDUIT STUB PLAN FOR ROADWAY LIGHTING ON A METAL BASE
SCALE 1:20

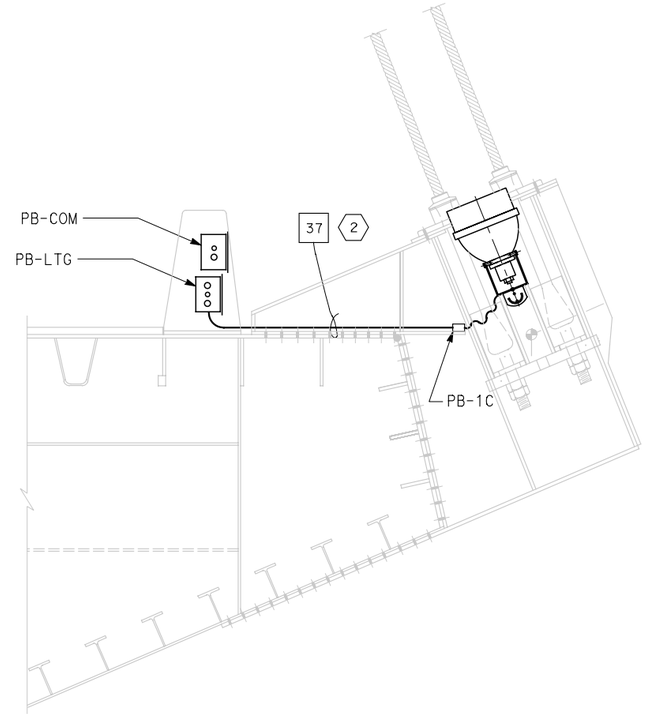


## TYPICAL UPLIGHT CONDUIT LAYOUT
SCALE 1:20

SHEET NOTES:

1. Bond grounding bushing to ground lug of lighting pole with #6 bare copper wire.
2. Conduit shall be clear of all piping and pipe sleeves. Route conduit on top of deck plate, outside of girder box.
3. See Utility Detail No. 1 (Sheet No. 965 of 1204) for conduit penetration through girder plate and lighting pole metal base. The Contractor shall install sealant between the sleeve and conduit for future light pipe, plug and cap sleeve to prevent water or moisture from passing inside the sleeve. (1)

NOTES:

1. References:
   - For lighting pole schedule, see sheet E-168.
   - For location of pull boxes inside girder, see sheets E-181 thru E-186.
   - For luminaire support details, see structural sheets.

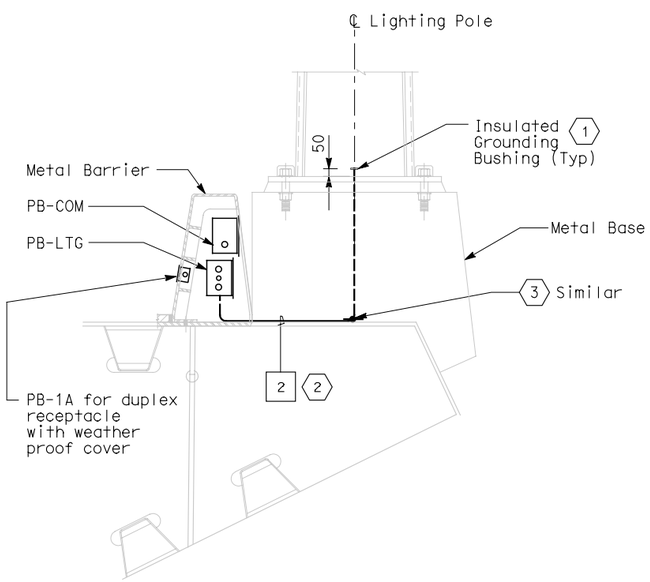


## SECTION A-A
SCALE 1:20

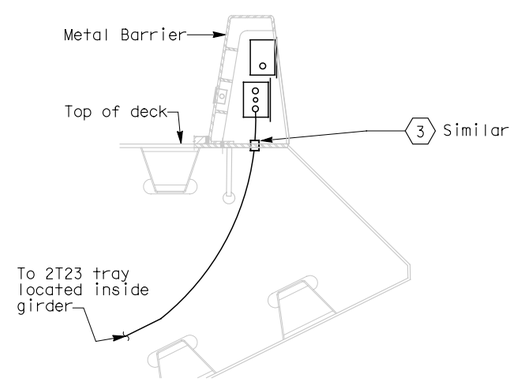


## DETAIL 3
CONDUIT FOR FUTURE LIGHTPIPE CONNECTIONS ON A STEEL STRUCTURE
SCALE 1:20

| MARK | DATE | DESCRIPTIONS | REV | CK | CCO NO. |
|---|---|---|---|---|---|
| 1 | 10/16/06 | Revised sheet notes. | LR | MG | 11 |

REVISIONS

CONTRACT CHANGE ORDER NO. 11
SHEET 12 OF 13

# DETAILS
## SAS SUPERSTRUCTURE ROADWAY EASTBOUND CONDUIT LOCATIONS
SCALE AS NOTED

E-161

ALL DIMENSIONS ARE IN MILLIMETERS UNLESS OTHERWISE SHOWN.

STATE OF CALIFORNIA - DEPARTMENT OF TRANSPORTATION
Caltrans

DESIGN OVERSIGHT: BEHZAD GOLEMOHAMMADI
CALCULATED/DESIGNED BY: KG DATE 10/01
CHECKED BY: AB 11/01
REVISED BY
DATE REVISED

FOR REDUCED PLANS ORIGINAL SCALE IS IN MILLIMETERS 0 20 40 60 80
DGN FILE =>$REQUEST
USERNAME =>$USER
CU 04251
EA 04201F2 0F4
LAST REVISION 00-00-00