DIST	COUNTY	ROUTE	KILOMETER POST TOTAL PROJECT	SHEET No	TOTAL SHEETS
04	SF	80	13.2/13.9	233 R1	1204

REGISTERED ELECTRICAL ENGINEER 12/19/02 DATE

PLANS APPROVAL DATE

REGISTERED PROFESSIONAL ENGINEER JENS ERLINGSSON No. 8249 Exp. 9/30/06 ELECTRICAL STATE OF CALIFORNIA

PB POWER, Inc.
A Parsons Brinckerhoff Company
303 Second St., Suite 700N
San Francisco, CA 94107-1317

The State of California or its officers or agents shall not be responsible for the accuracy or completeness of electronic copies of this plan sheet.

Caltrans now has a web site! To get to the web site, go to http://www.dot.ca.gov

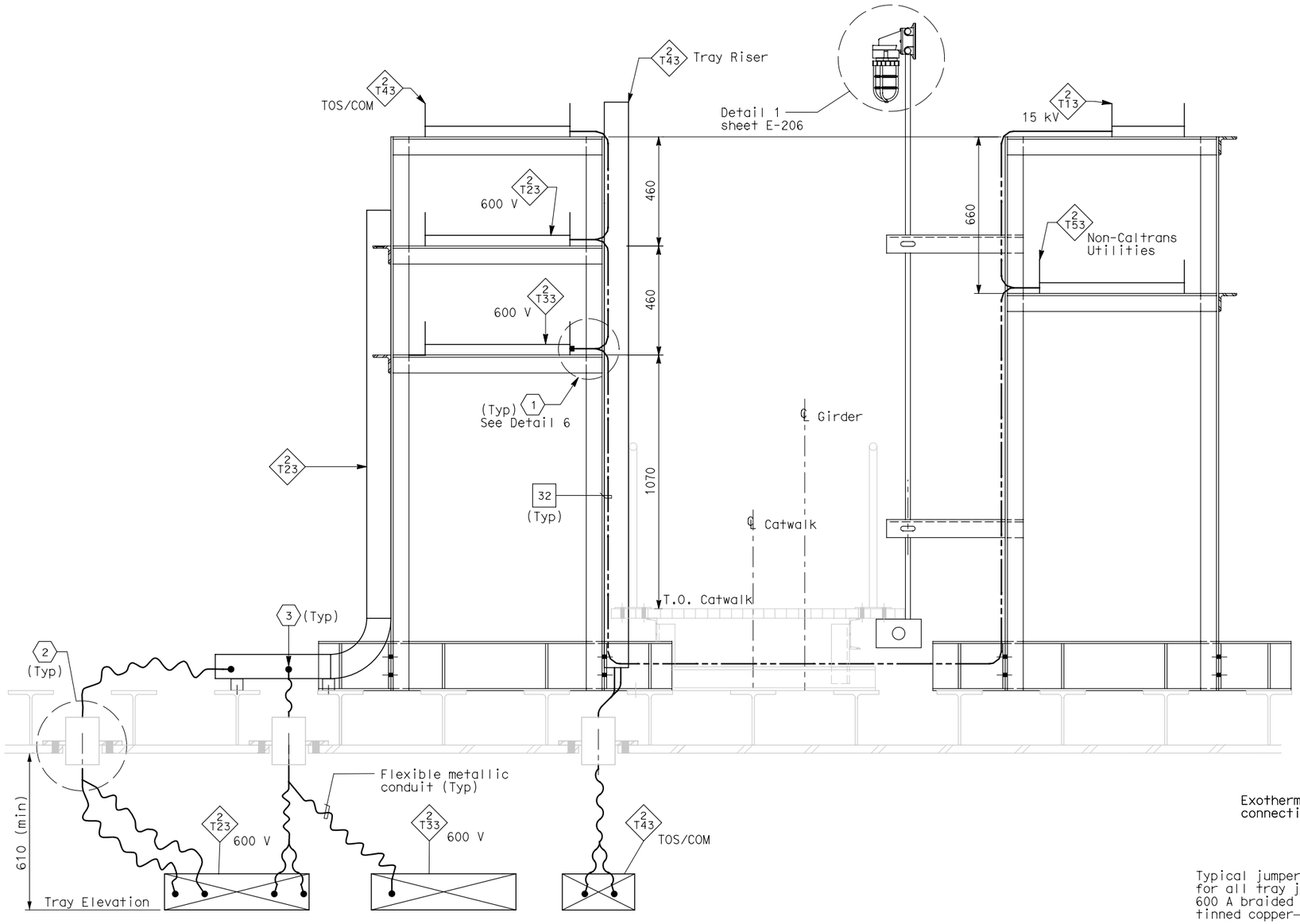

SECTION D-D - TYPICAL CABLE TRAY SUPPORT

SCALE: 1:10

SHEET NOTES:

1. Provide connections to 500 kcmil system ground for all cable trays, every 200 meters.
2. For location of conduit penetrations thru girder plate, see Utility Detail No. 1 and Utility Layout sheets respectively. To prevent moisture from passing inside the sleeve, Contractor shall install sealant after conduit have been installed. Spares shall be plugged and capped.
3. Contractor shall provide hooked conduit support grips for each conduit or groups of conduits passing through the conduit penetrations. Contractor shall provide support for grips as needed.

NOTES:

1. See structural drawings for Catwalk Support Details.
2. For SAS Superstructure Girder access detail #2, see structural dwgs.
3. Ground cable shall be installed along full length of the 15 kV cable tray only. (1)
4. For typical cable tray support details, see AS-sheets.

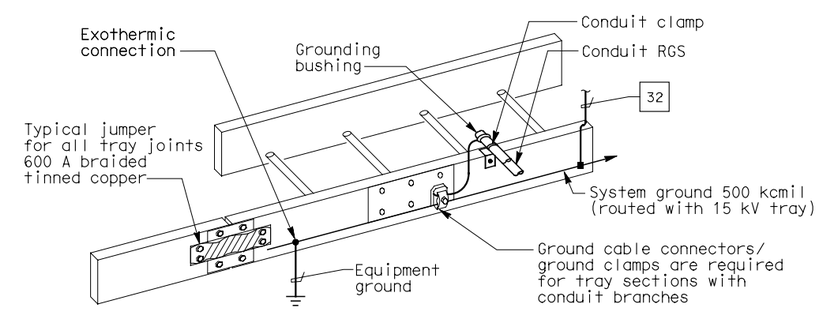

GROUNDING OF METALLIC RACEWAYS

DETAIL 6

MARK	DATE	DESCRIPTIONS	REV	CK	CCO NO.
1	1/10/06	Revised note. Bidder Inquiry #330.	CR	JE	11

REVISIONS

CONTRACT CHANGE ORDER NO. 11
SHEET 13 OF 13

DETAILS
SAS SUPERSTRUCTURE GIRDER EASTBOUND
TYPICAL CABLE TRAY AND GROUNDING INSTALLATION 2

SCALE AS NOTED

E-208

DESIGN OVERSIGHT	CALCULATED/ DESIGNED BY	EDC	DATE 08/02	REVISED BY
BEHZAD GOLEMOHAMMADI	CHECKED BY	CYF	3/04	DATE REVISED

STATE OF CALIFORNIA - DEPARTMENT OF TRANSPORTATION
Caltrans

ALL DIMENSIONS ARE IN MILLIMETERS UNLESS OTHERWISE SHOWN.

FOR REDUCED PLANS ORIGINAL SCALE IS IN MILLIMETERS 0 20 40 60 80

DGN FILE =>$REQUEST
USERNAME =>$USER

CU 04251 EA 0120F1

LAST REVISION 00-00-00 DATE PLOTTED => $DATE TIME PLOTTED => $TIME