DIST	COUNTY	ROUTE	KILOMETER POST TOTAL PROJECT	SHEET No	TOTAL SHEETS
04	SF	80	13.2/13.9	208R1	1204

Caltrans Metric

REGISTERED ELECTRICAL ENGINEER 12/19/02 DATE

12-6-04
PLANS APPROVAL DATE

REGISTERED PROFESSIONAL ENGINEER JENS ERLINGSSON No. 8249 Exp. 9/30/06 ELECTRICAL STATE OF CALIFORNIA

PB POWER, Inc.
A Parsons Brinckerhoff Company
303 Second St., Suite 700N
San Francisco, CA 94107-1317

The State of California or its officers or agents shall not be responsible for the accuracy or completeness of electronic copies of this plan sheet.

Caltrans now has a web site! To get to the web site, go to http://www.dot.ca.gov

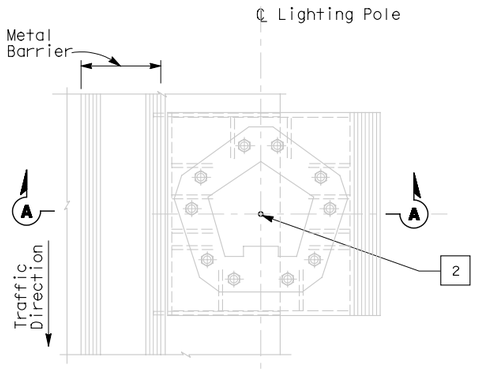

PLAN

TYPICAL CONDUIT STUB PLAN FOR ROADWAY LIGHTING ON A METAL BASE
SCALE 1:20

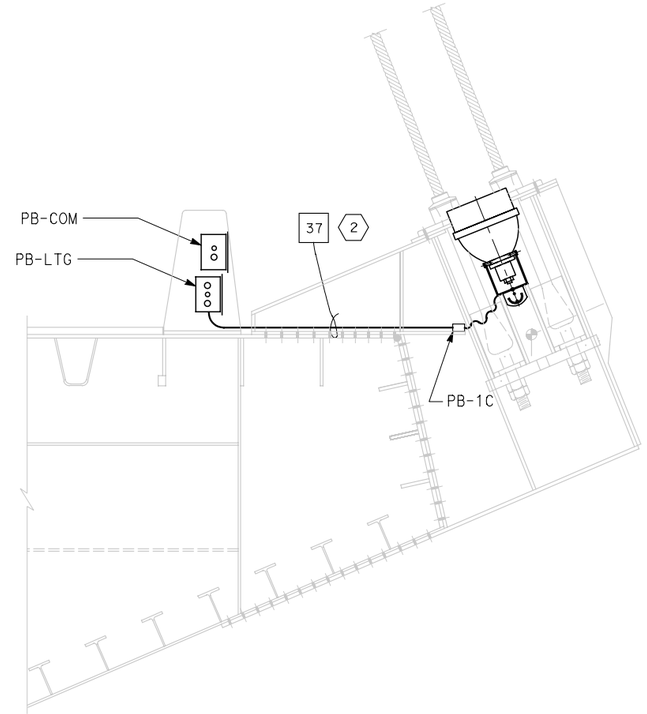

TYPICAL UPLIGHT CONDUIT LAYOUT

SCALE 1:20

SHEET NOTES:

(1) Bond grounding bushing to ground lug of lighting pole with #6 bare copper wire.

(2) Conduit shall be clear of all piping and pipe sleeves. Route conduit on top of deck plate, outside of girder box.

(3) See Utility Detail No. 1 (Sheet No. 965 of 1204) for conduit penetration through girder plate and lighting pole metal base. The Contractor shall install sealant between the sleeve and conduit for future light pipe, plug and cap sleeve to prevent water or moisture from passing inside the sleeve. (1)

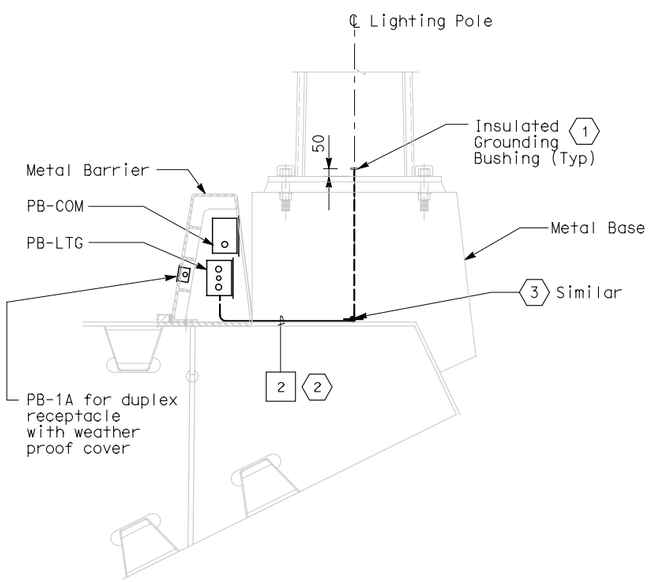

SECTION A-A

SCALE 1:20

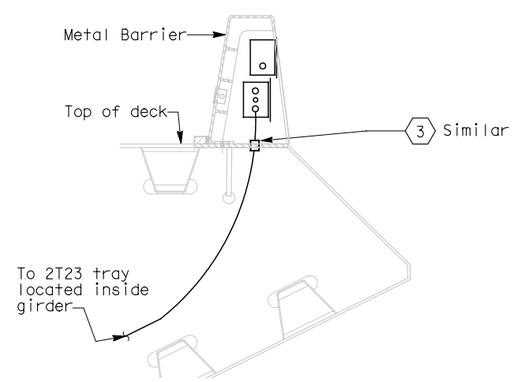

DETAIL 3

CONDUIT FOR FUTURE LIGHTPIPE CONNECTIONS ON A STEEL STRUCTURE
SCALE 1:20

NOTES:

1. References:
   - For lighting pole schedule, see sheet E-168.
   - For location of pull boxes inside girder, see sheets E-181 thru E-186.
   - For luminaire support details, see structural sheets.

MARK	DATE	DESCRIPTIONS	REV	CK	CCO NO.
1	10/16/06	Revised sheet notes.	LR	MG	11
		REVISIONS			

CONTRACT CHANGE ORDER NO. 11
SHEET 12 OF 13

DETAILS

SAS SUPERSTRUCTURE ROADWAY EASTBOUND CONDUIT LOCATIONS

SCALE AS NOTED

E-161

DATE	REVISED BY	DATE	REVISED BY
10/01	KG	11/01	AB

CALCULATED/DESIGNED BY — CHECKED BY

DESIGN OVERSIGHT — BEHZAD GOLEMOHAMMADI

STATE OF CALIFORNIA - DEPARTMENT OF TRANSPORTATION — Caltrans

ALL DIMENSIONS ARE IN MILLIMETERS UNLESS OTHERWISE SHOWN.

FOR REDUCED PLANS ORIGINAL SCALE IS IN MILLIMETERS 0 20 40 60 80

DGN FILE =>$REQUEST
USERNAME =>$USER

CU 04251 EA 0420F2 PM 20F4

LAST REVISION 00-00-00