DIST	COUNTY	ROUTE	KILOMETER POST TOTAL PROJECT	SHEET No	TOTAL SHEETS
04	SF	80	13.2/13.9	132R1	1204

Jens Erlingsson 12/19/02
REGISTERED ELECTRICAL ENGINEER DATE

REGISTERED PROFESSIONAL ENGINEER
JENS ERLINGSSON
No. 8249
Exp. 9/30/06
ELECTRICAL
STATE OF CALIFORNIA

PLANS APPROVAL DATE

PB POWER, Inc.
A Parsons Brinckerhoff Company
303 Second St., Suite 700N
San Francisco, CA 94107-1317

The State of California or its officers or agents shall not be responsible for the accuracy or completeness of electronic copies of this plan sheet.

Caltrans now has a web site! To get to the web site, go to http://www.dot.ca.gov

Caltrans Metric

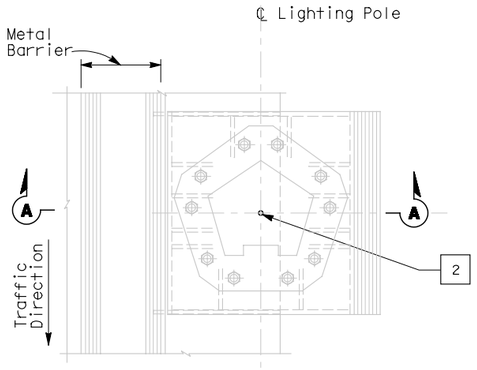

PLAN
CONDUIT STUB-UP PLAN FOR ROADWAY LIGHTING ON A METAL BASE
SCALE 1:20

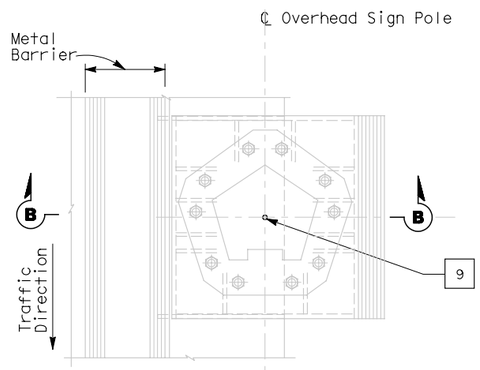

PLAN
CONDUIT STUB-UP PLAN FOR OVERHEAD SIGN ON A METAL BASE
SCALE 1:20

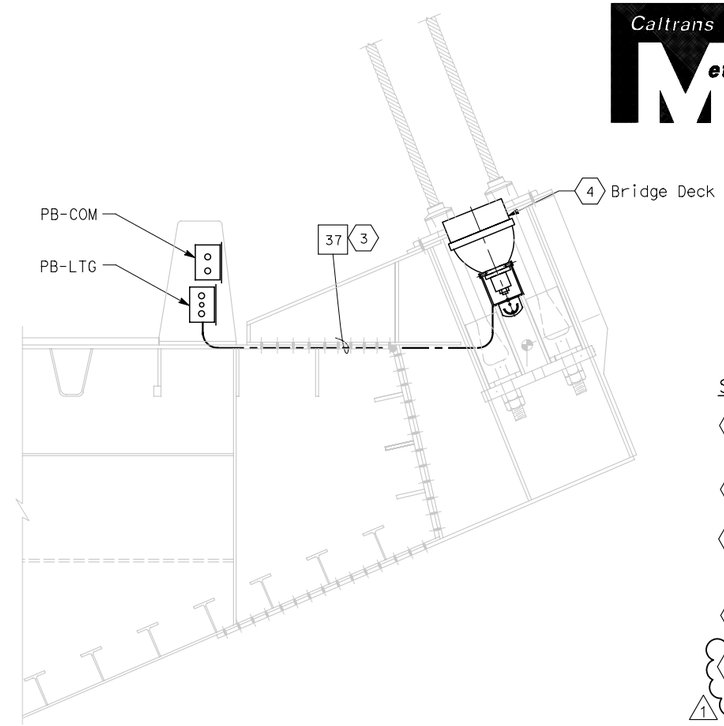

TYPICAL PYLON FLOODLIGHT CONDUIT LAYOUT
SCALE 1:20

SHEET NOTES:

1. Bond grounding bushing to ground lug of lighting pole with #6 bare copper wire.
2. Conduits for future light pipe shall continue from this pull box.
3. Conduit shall be clear of all piping and pipe sleeves. Route conduit on top of deck plate, outside of girder box.
4. For pylon floodlightting layout, see sheets E-47 & E-48.
5. See Utility Detail No. 1 (Sheet No. 965 of 1204) for conduit penetration through girder plate and lighting pole metal base. The Contractor shall install seglant between the sleeve and conduit for future light pipe, plug and cap sleeve to prevent water or moisture from passing inside the sleeve. (1)

MARK	DATE	DESCRIPTIONS	REV	CK	CCO NO.
1	10/16/06	Revised sheet notes.	LR	MG	11

REVISIONS

CONTRACT CHANGE ORDER NO. 11
SHEET 10 OF 13

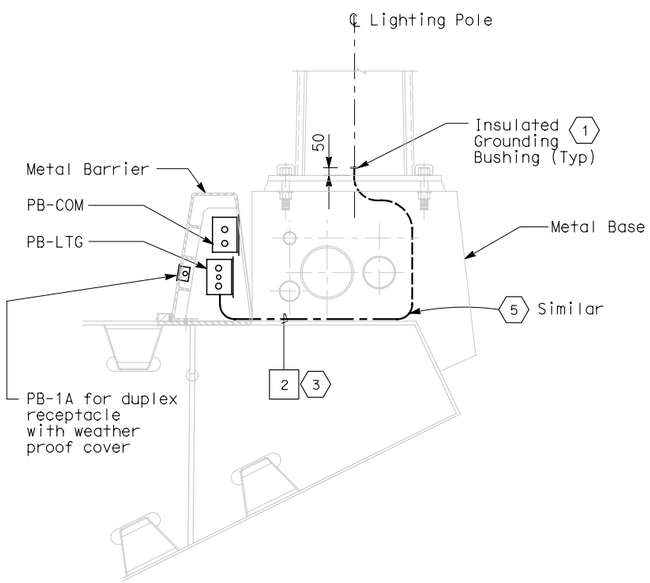

SECTION A-A
SCALE 1:20

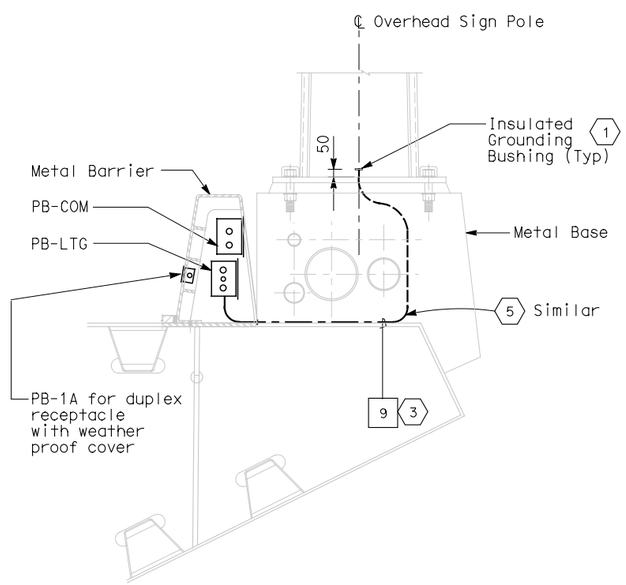

SECTION B-B
SCALE 1:20

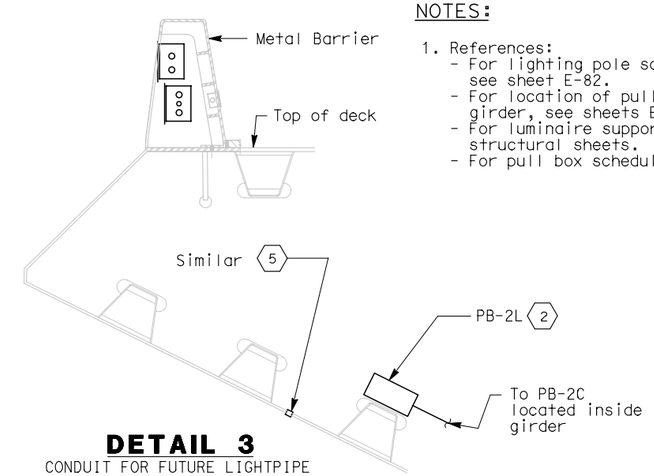

DETAIL 3
CONDUIT FOR FUTURE LIGHTPIPE CONNECTIONS ON A STEEL STRUCTURE
SCALE: 1:20

NOTES:

1. References:
   - For lighting pole schedule, see sheet E-82.
   - For location of pull boxes inside girder, see sheets E-96 thru E-101.
   - For luminaire support details, see structural sheets.
   - For pull box schedule, see sheet E-83.

DETAILS
SAS SUPERSTRUCTURE ROADWAY WESTBOUND CONDUIT LOCATIONS
SCALE AS NOTED

E-67

CALCULATED/ DESIGNED BY	KG	DATE 10/01	REVISED BY	DATE REVISED
CHECKED BY	AB	11/01		

DESIGN OVERSIGHT
BEHZAD GOLEMOHAMMADI

STATE OF CALIFORNIA - DEPARTMENT OF TRANSPORTATION
Caltrans

LAST REVISION 00-00-00

FOR REDUCED PLANS ORIGINAL SCALE IS IN MILLIMETERS 0 20 40 60 80

DGN FILE =>$REQUEST
USERNAME =>$USER

CU 04251 EA 0120F1