| DIST | COUNTY | ROUTE | KILOMETER POST TOTAL PROJECT | SHEET No | TOTAL SHEETS |
|---|---|---|---|---|---|
| 04 | SF | 80 | 13.2/13.9 | 133R1 | 1204 |

REGISTERED ELECTRICAL ENGINEER 12/19/02 DATE

12-6-04
PLANS APPROVAL DATE

REGISTERED PROFESSIONAL ENGINEER JENS ERLINGSSON No. 8249 Exp. 9/30/06 ELECTRICAL STATE OF CALIFORNIA

PB POWER, Inc.
A Parsons Brinckerhoff Company
303 Second St., Suite 700N
San Francisco, CA 94107-1317

*The State of California or its officers or agents shall not be responsible for the accuracy or completeness of electronic copies of this plan sheet.*

*Caltrans now has a web site! To get to the web site, go to http://www.dot.ca.gov*

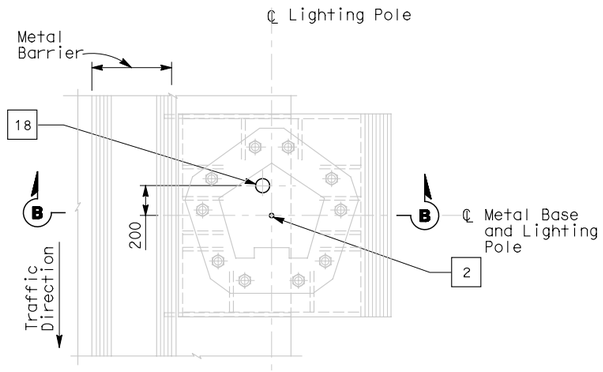


**PLAN**
CONDUIT STUB-UP PLAN FOR ROADWAY LIGHTING AND MVDS ON METAL BASE
SCALE 1:20

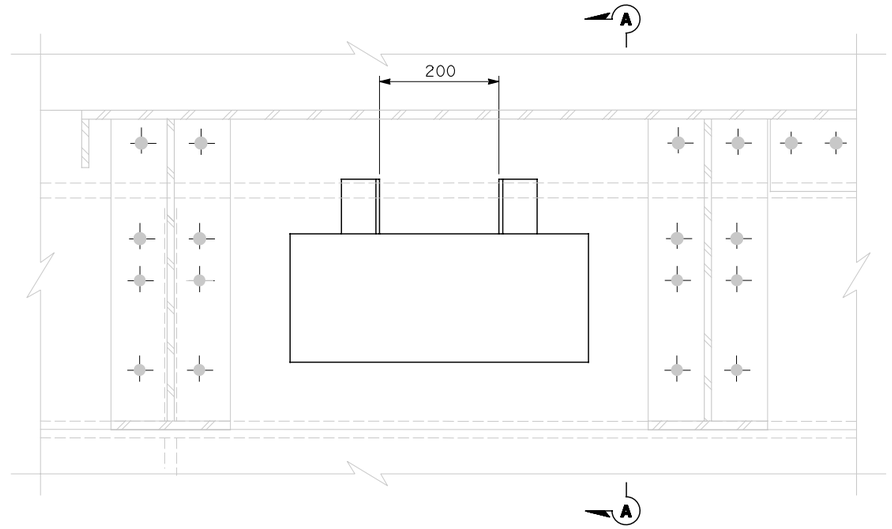


**PLAN**
PULL BOX IN STEEL BARRIER
SCALE 1:5

## SHEET NOTES:

1. Bond grounding bushing to ground lug of lighting pole or overhead sign post with #6 bare copper wire.
2. Conduit shall clear all piping and pipe sleeves. Route conduit on top of deck plate, outside of girder box.
3. See Utility Detail No. 1 (Sheet No. 965 of 1204) for conduit penetration through girder plate and lighting pole metal base. The Contractor shall install sealant between the sleeve and conduit to prevent water or moisture from passing inside the sleeve. (1)

## NOTES:

1. References:
   - For installation and typical details of TOS equipment, see sheets E-344 thru E-357.
   - For pull box schedule, see sheet E-83.
   - For TOS field element locations, see sheet E-341.

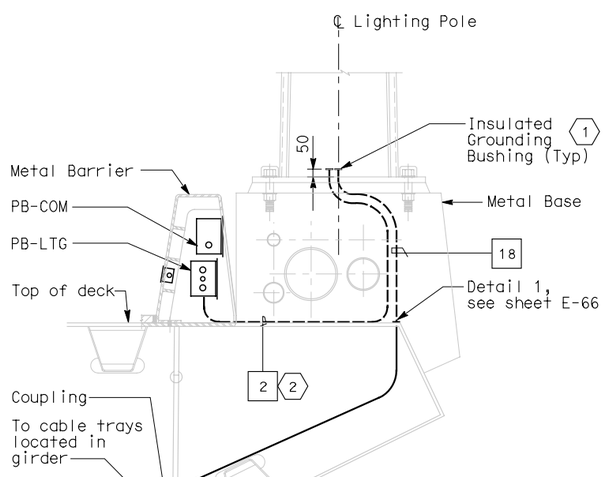


**SECTION B-B**
SCALE 1:20

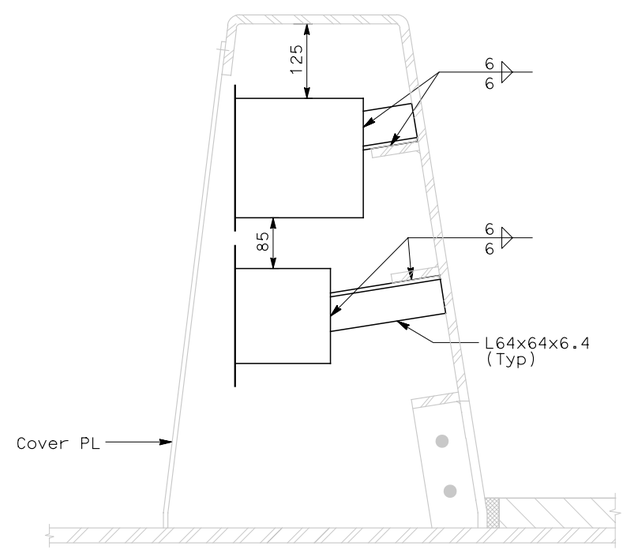


**SECTION A-A**
SCALE 1:5

| MARK | DATE | DESCRIPTIONS | REV | CK | CCO NO. |
|---|---|---|---|---|---|
| 1 | 10/16/06 | Revised sheet notes. | LR | MG | 11 |

REVISIONS

CONTRACT CHANGE ORDER NO. 11
SHEET 11 OF 13

# DETAILS
## SAS SUPERSTRUCTURE ROADWAY WESTBOUND CONDUIT LOCATIONS
SCALE AS NOTED

**E-68**

| CALCULATED/ DESIGNED BY | KG | DATE 10/01 | REVISED BY | DATE REVISED |
|---|---|---|---|---|
| CHECKED BY | AB | 11/01 | | |

DESIGN OVERSIGHT: BEHZAD GOLEMOHAMMADI

STATE OF CALIFORNIA - DEPARTMENT OF TRANSPORTATION
Caltrans

LAST REVISION 00-00-00 | DATE PLOTTED => $DATE | TIME PLOTTED => $TIME

FOR REDUCED PLANS ORIGINAL SCALE IS IN MILLIMETERS 0 20 40 60 80

DGN FILE =>$REQUEST
USERNAME =>$USER

CU 04251 | EA 0120F1