DRAFT

FRAMING REQUIREMENTS FOR SINGLE SHEET ALUMINUM SIGNS

SIGN LENGTH	SIGN HEIGHT	PANEL THICKNESS	# OF HORIZ. MEMBERS	# OF VERT. MEMBERS	MEMBER TYPE	MEMBER TYPE
Up to 47"(1194)		0.063(1.6)	No Frame Required			
48"(1219) to 55"(1397)		0.080(2.0)	No Frame Required			
56"(1422) to 70"(1778)	12"(305) to 24"(610)	0.063(1.6)	2	-	A	-
	25"(635) to 36"(914)	0.063(1.6)	2	2	A	A
	37"(940) to 48"(1219)	0.063(1.6)	2	3	A	A
	49"(1245) to 96"(2438)	0.063(1.6)	3	3	B	A
72"(1829) to 78"(1981)	12"(305) to 24"(610)	0.063(1.6)	2	-	A	-
	25"(635) to 36"(914)	0.063(1.6)	2	2	A	A
	37"(940) to 48"(1219)	0.063(1.6)	2	3	A	A
	49"(1245) to 72"(1829)	0.063(1.6)	3	3	B	B
	73"(1854) to 96"(2438)	0.063(1.6)	3	3	C	C
80"(2032) to 90"(2286)	18"(457) to 48"(1219)	0.080(2.0)	2	3	B	B
	49"(1245) to 72"(1829)	0.080(2.0)	3	3	B	B
	73"(1854) to 96"(2438)	0.080(2.0)	3	3	C	C
92"(2337) to 102"(2591)	18"(457) to 48"(1219)	0.080(2.0)	2	3	B	B
	49"(1245) to 96"(2438)	0.080(2.0)	3	3	C	C
104"(2642) to 114"(2896)	18"(457) to 48"(1219)	0.080(2.0)	2	3	B	B
	49"(1245) to 96"(2438)	0.080(2.0)	3	3	C	C
116"(2946) to 132"(3353)	18"(457) to 48"(1219)	0.080(2.0)	2	3	C	C
	49"(1245) to 96"(2438)	0.080(2.0)	3	3	C	C
	97"(2464) to 132"(3353)	0.080(2.0)	4	3	C	C
Diamond						
Less than	48"(1219) x 48"(1219)	0.063(1.6)			No Frame Required	
	48"(1219) x 48"(1219)	0.080(2.0)			No Frame Required	
	60"(1524) to 60"(1524)	0.080(2.0)			See Drawing #5	
	72"(1829) x 72"(1829)	0.080(2.0)			See Drawing #6	
	96"(2438) x 96"(2438)	0.080(2.0)			See Drawing #7	

NOTE: Type A - 1-1/4"x1-1/4"x1/8" (31.8x31.8x3.2) channel to be aluminum alloy 6063-T5
Type B* - 2-3/8"x1-1/4"x3/16" (60.3x31.8x4.8) channel to be aluminum alloy 6063-T6
Type C* - 2"x2"x1/4" (50.8x50.8x6.4) channel to be aluminum alloy 6063-T6

* 1-3/4"x1-1/2"x1/8" (44.5x38.1x3.2) rectangular tubing aluminum alloy 6063-T6 may be substituted for Types B and C, but more than one type of framing material used on one sign is unacceptable.

POST SPACING

SIGN WIDTH	CENTERLINE SPACING
56"(1422) to 68"(1727)	42"(1067)
70"(1778) to 80"(2032)	48"(1219)
82"(2083) to 92"(2337)	54"(1372)
94"(2388) to 98"(2489)	60"(1524)
100"(2540) to 104"(2642)	62"(1575)
106"(2692) to 110"(2794)	64"(1626)
112"(2845) to 116"(2946)	68"(1727)
118"(2997) to 122"(3099)	72"(1829)
124"(3150) to 130"(3302)	78"(1981)
131"(3327) to 132"(3353)	84"(2134)

DRAFT

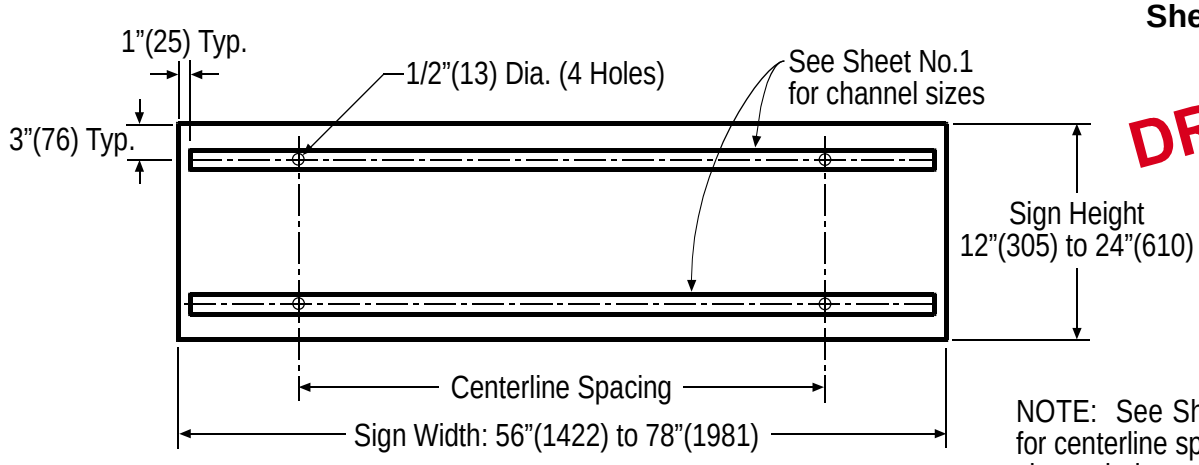

NOTE: See Sheet No. 1 for centerline spacing and channel size. See Rivet Detail for rivet spacing.

DRAWING NO. 1

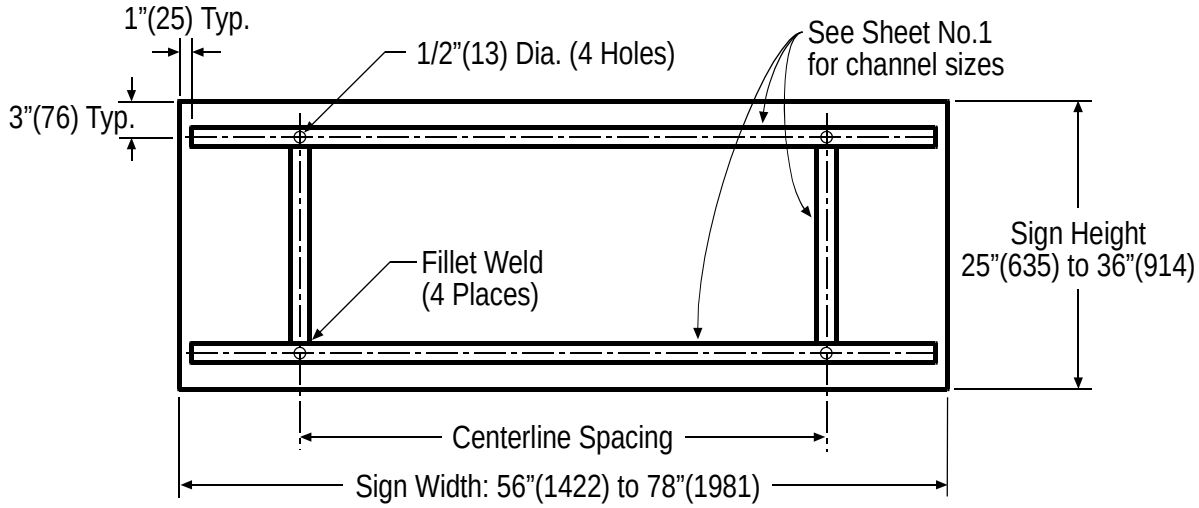

DRAWING NO. 2

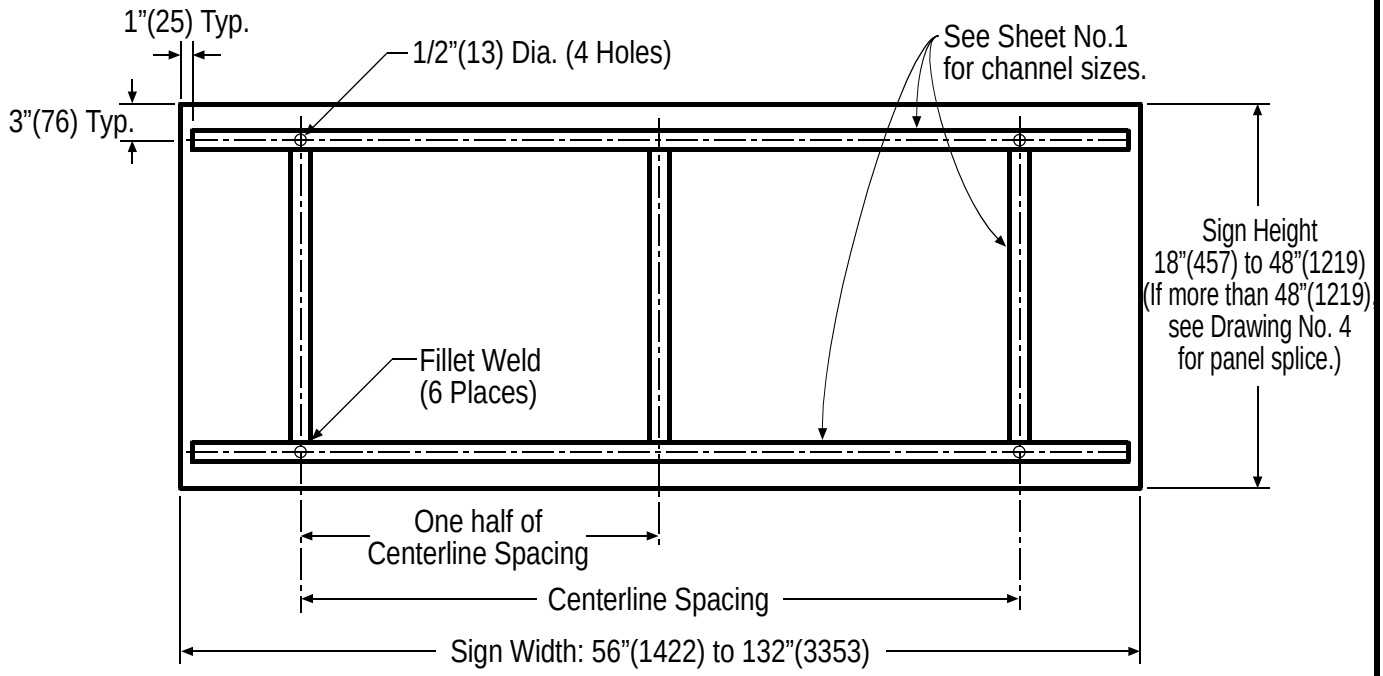

DRAWING NO. 3

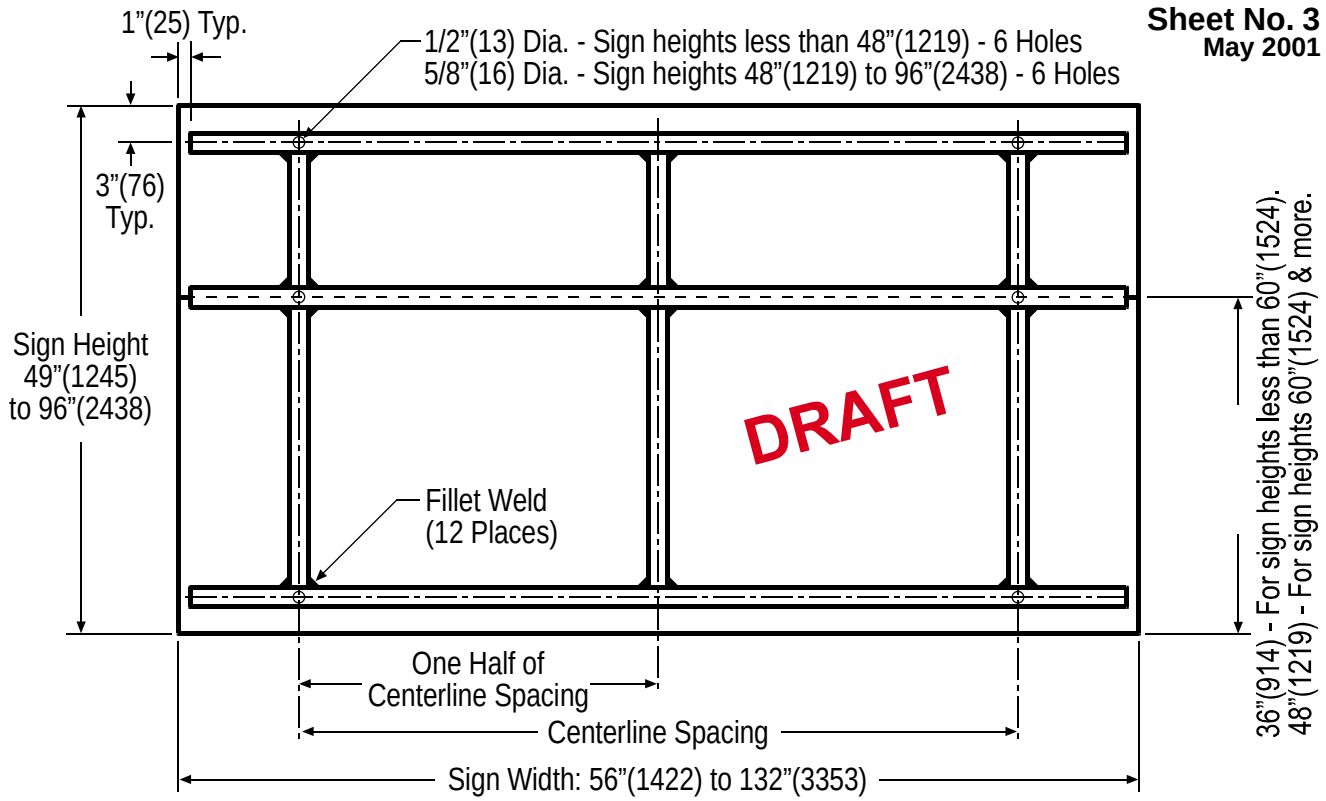

DRAWING NO. 4

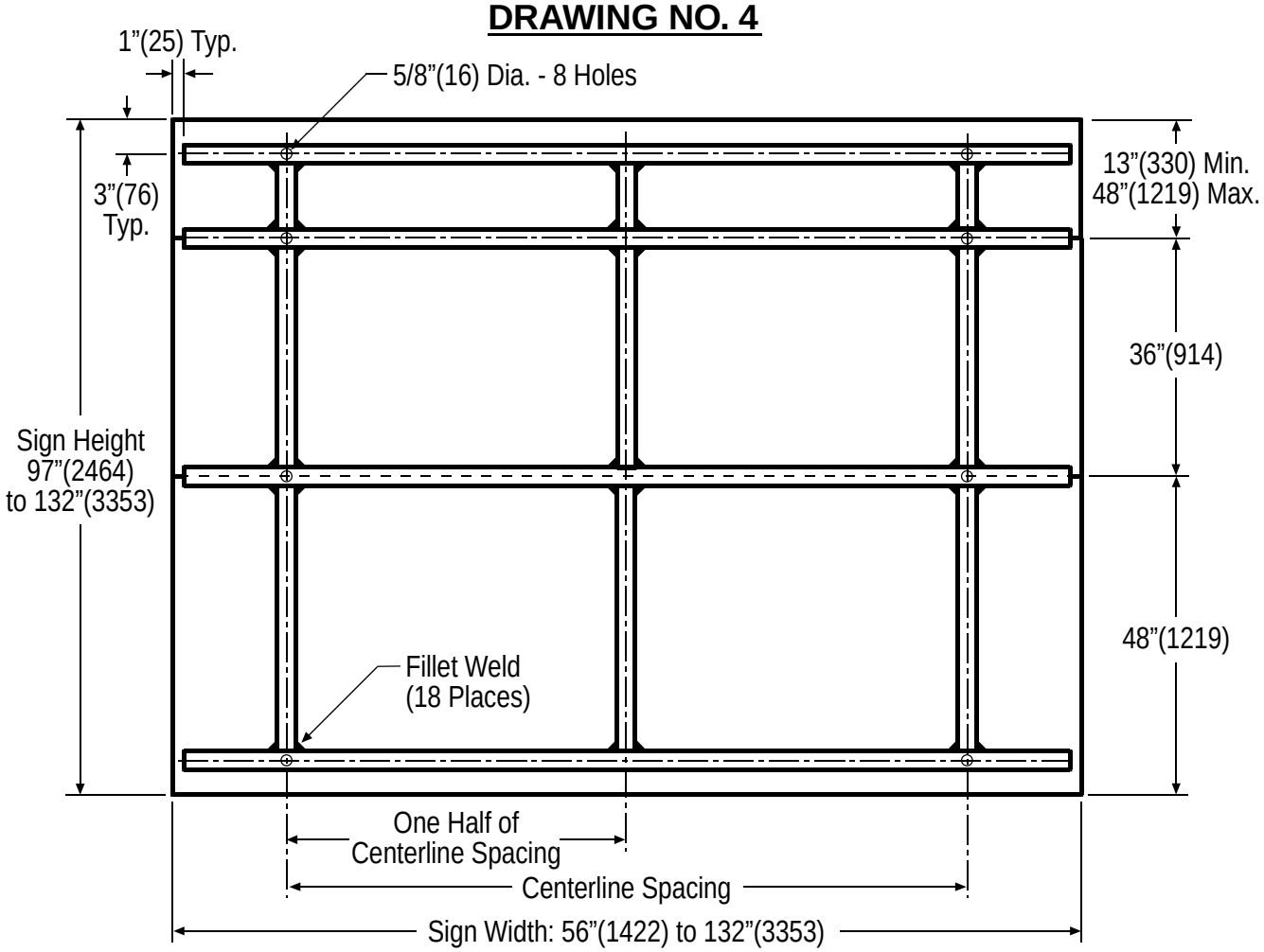

DRAWING NO. 4a

DRAFT

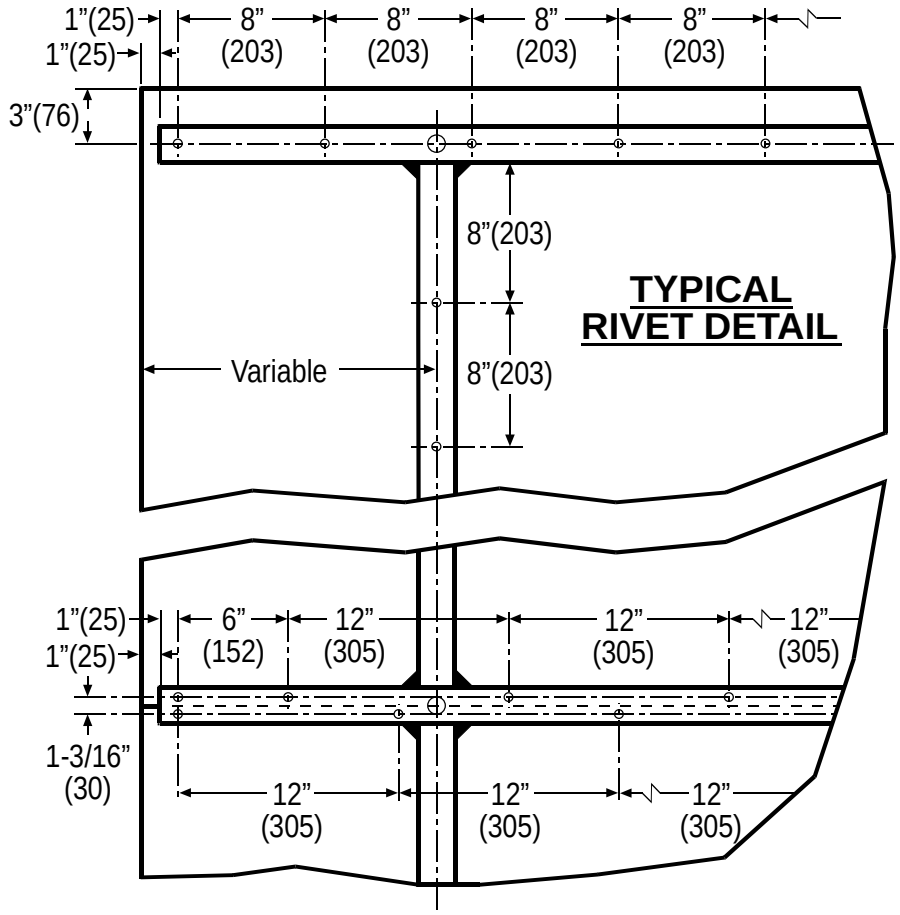

TYPICAL RIVET DETAIL

RIVET DETAIL AT SPLICE

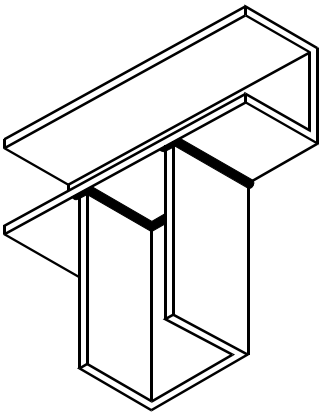

WELD DETAIL

Fillet weld all around in and
out on material 2"(51) and larger.
Grind beads flush, front and back.
Weld around outside only on 1"(25) material.

For rectangular tubing,
weld all around and grind
where weld contacts sign panel.

DRAFT

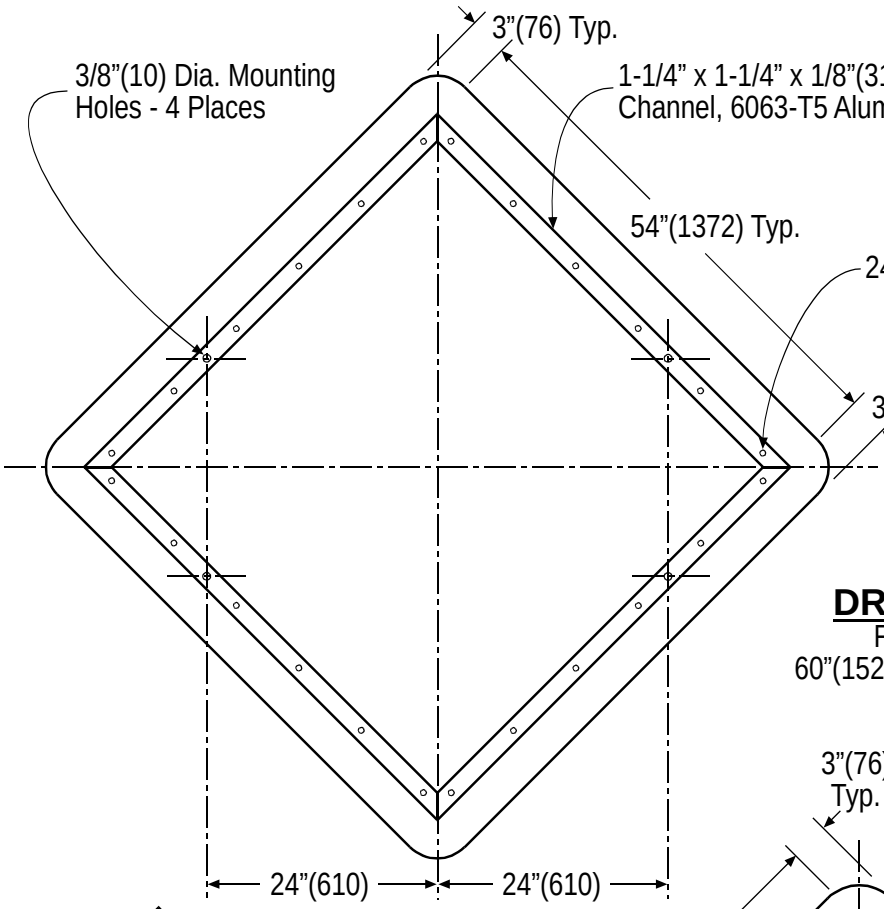

DRAWING NO. 5

Framing Detail for
60"(1524) x 60"(1524) Diamond

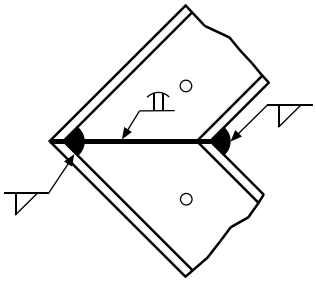

TYPICAL WELD DETAIL

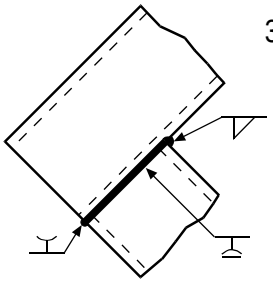

ALTERNATE WELD DETAIL

Weld all around outside.

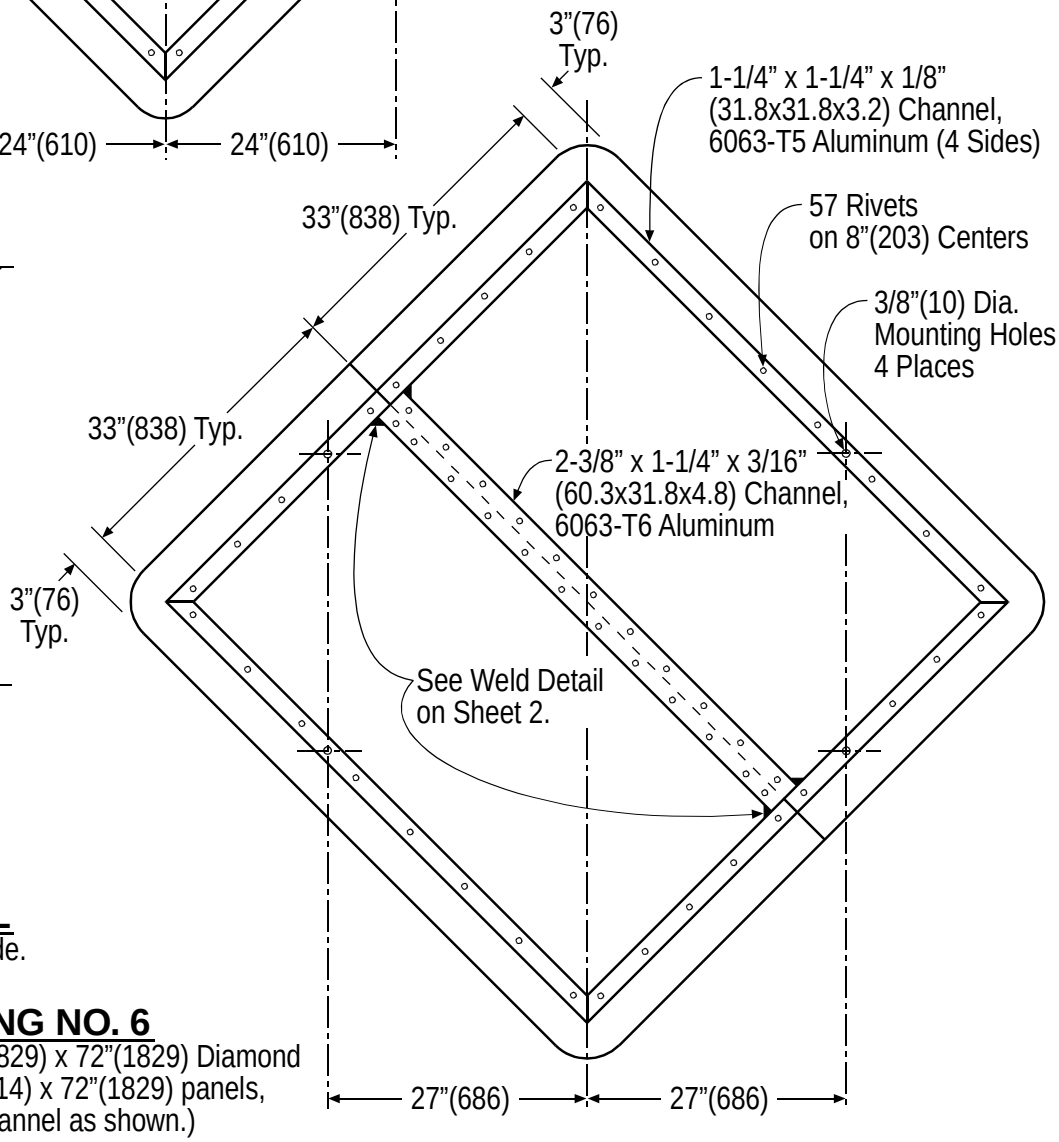

DRAWING NO. 6

Framing Detail for 72"(1829) x 72"(1829) Diamond
(Made from 2 - 36"(914) x 72"(1829) panels,
spliced by a channel as shown.)

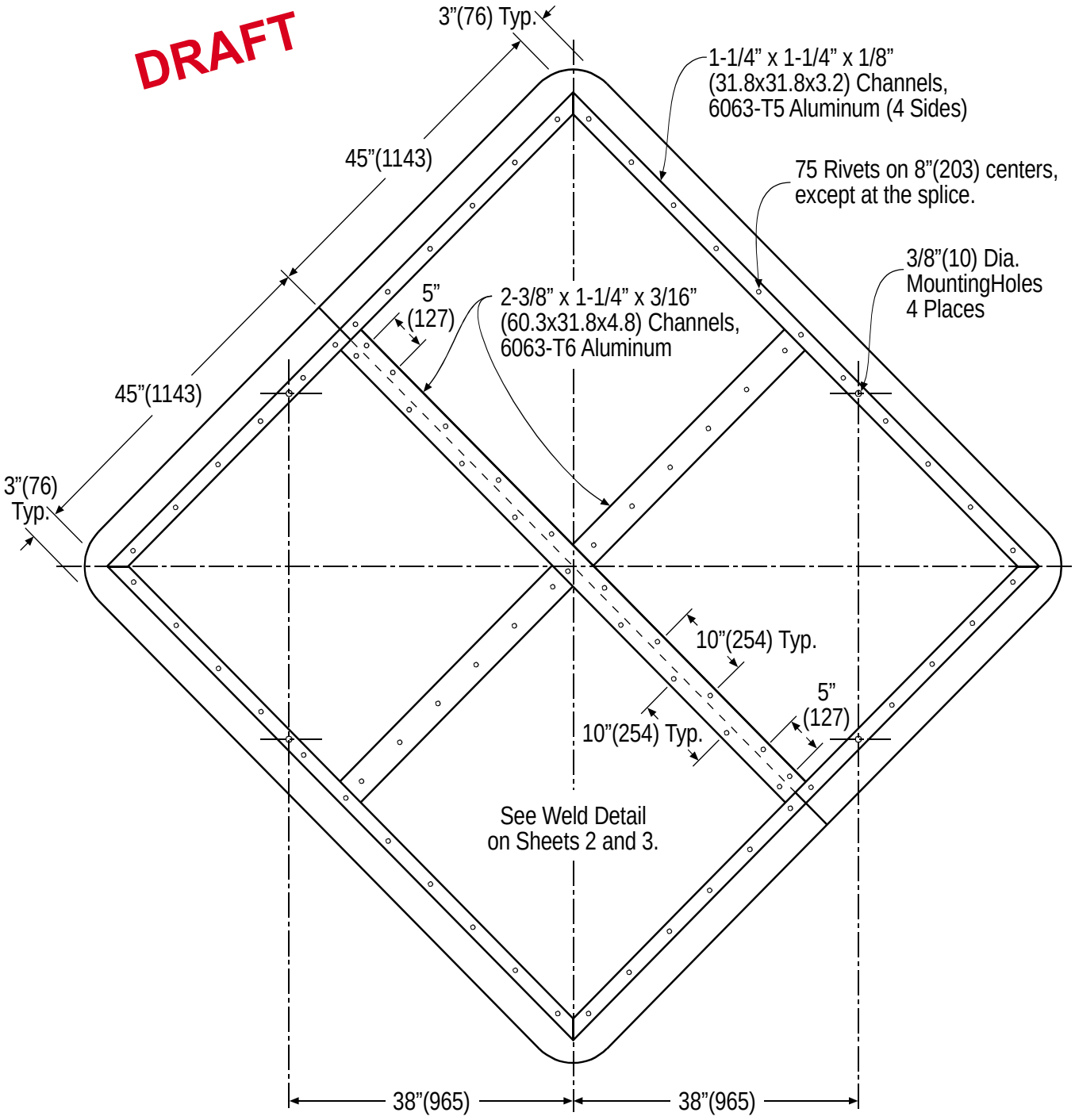

DRAWING NO. 7

Framing Detail for 96"(2438) x 96"(2438) Diamond
(Made from 2 - 48"(1219) x 96"(2438) panels,
spliced and braced by channels as shown.)

DRAFT

Opaque Colors

Sheet No. 7
May 2001

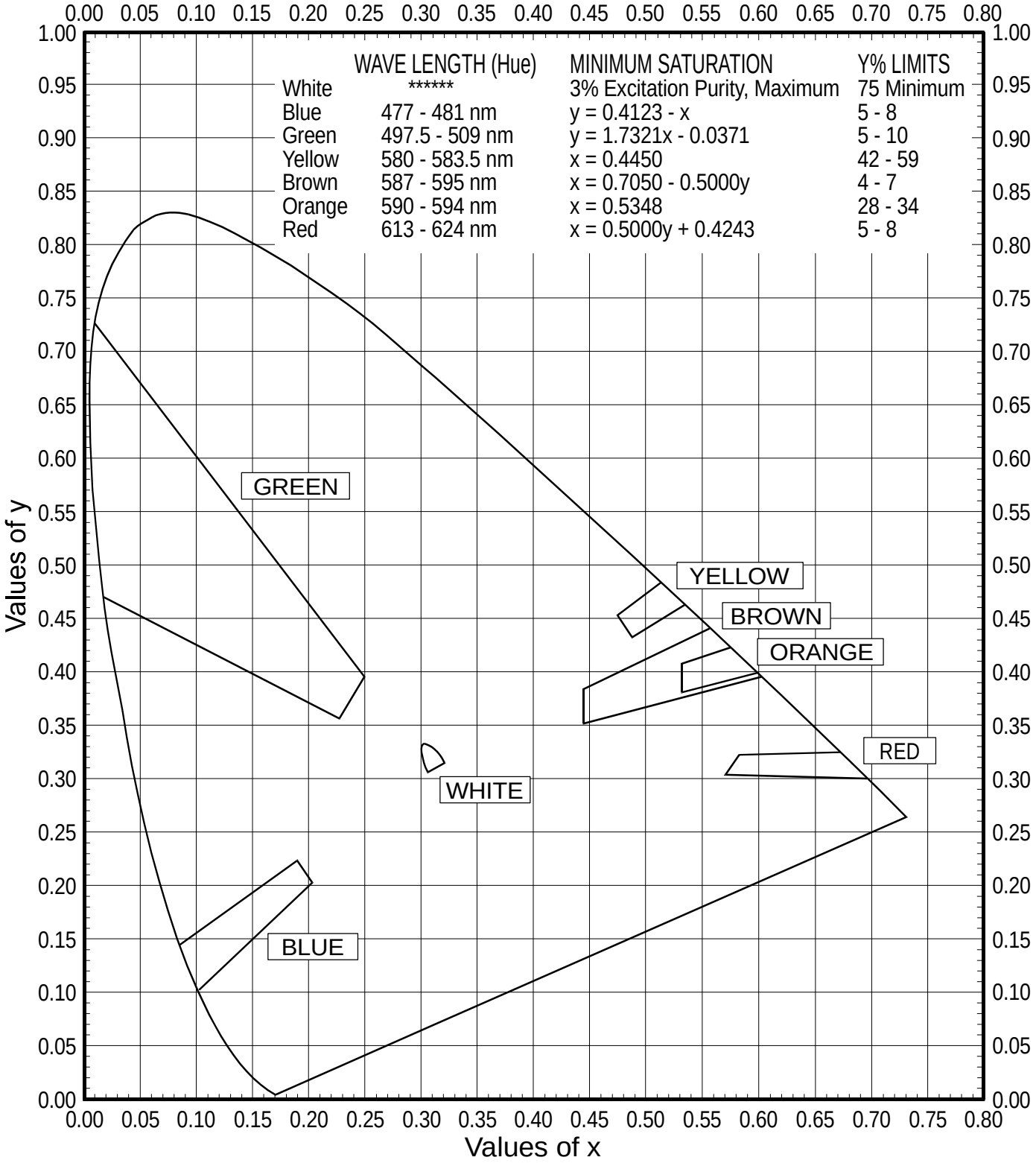

Chromaticity Specifications

CIE 2-Degree Observer and Illuminant “C”
California Test 660

August 1994 (Rev. 1/2000)

DRAFT

Reflective Sheeting Colors

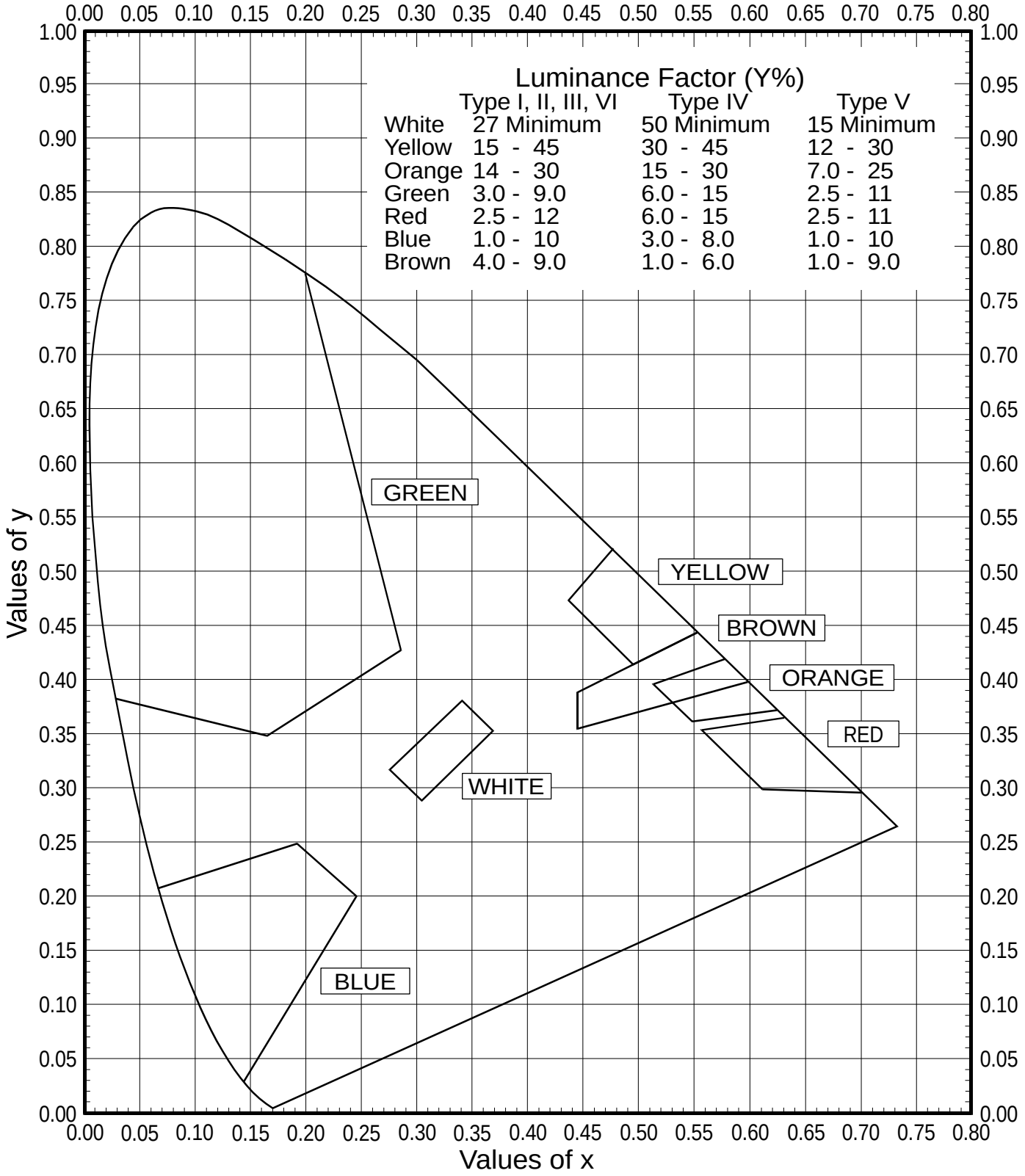

Chromaticity Specifications

CIE 2-Degree Observer and Illuminant “C”

California Test 660 AASHTO Designation: M268-93