Figure 7-6b
ADJUSTABLE HEIGHT GUARDRAIL (3-HOLE POST)

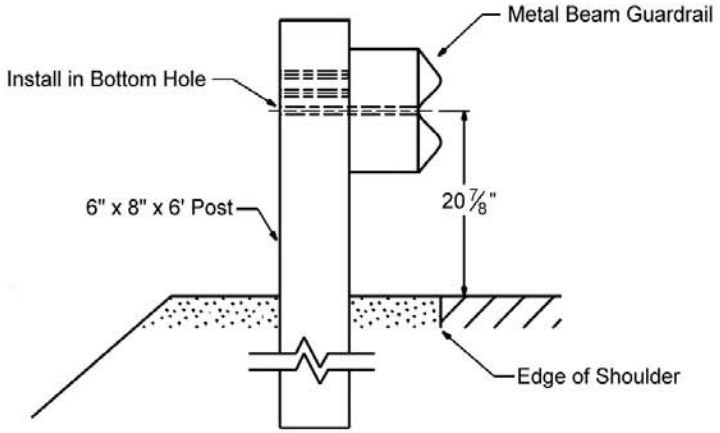

Initial Installation

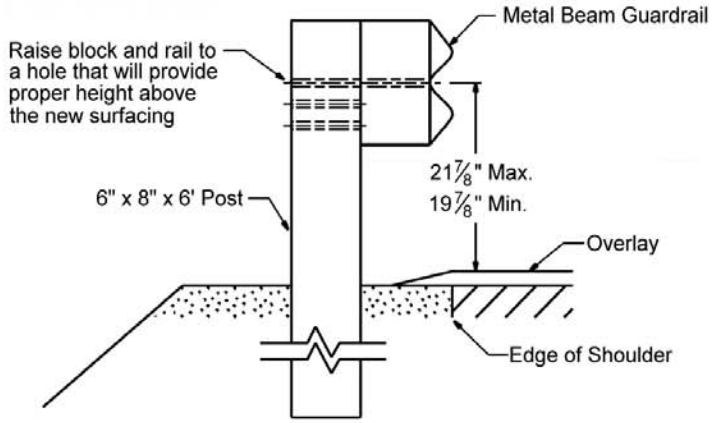

Adjusted Rail Height

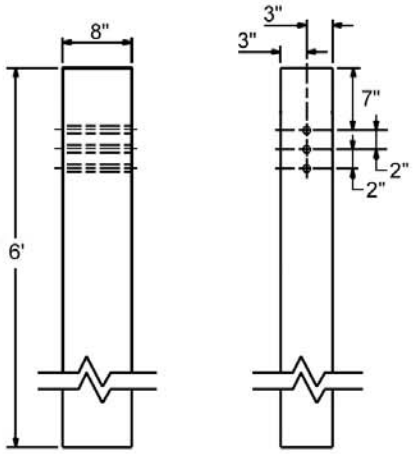

3-Hole Post Detail

NOTES:

1. All holes in wood posts and blocks shall be 3/4" diameter ± 1/16"
2. For additional details, see Standard Plans.