04-SF-101-2.0
20.10.201.110
EA 3G620K
September 2011

PROJECT SCOPE SUMMARY REPORT (STRUCTURE REHABILITATION) To Request Programming in the 2012 SHOPP

On Route 101 At Alemany Circle Undercrossing

I have reviewed the right of way information contained in this Project Scope Summary Report and the R/W Data Sheet attached hereto, and find the data to be complete, current and accurate:

MARK L. WEAVER,
DEPUTY DISTRICT DIRECTOR – RIGHT OF WAY AND LAND SURVEYS

APPROVAL RECOMMENDED:

SOMCHAI CHONGCHAIKIT, PROJECT MANAGER

APPROVED:

BIJAN SARTIPI, DISTRICT DIRECTOR

9/22/11
DATE

04-SF-101-2.0
20.10.201.110
EA 3G620K
September 2011

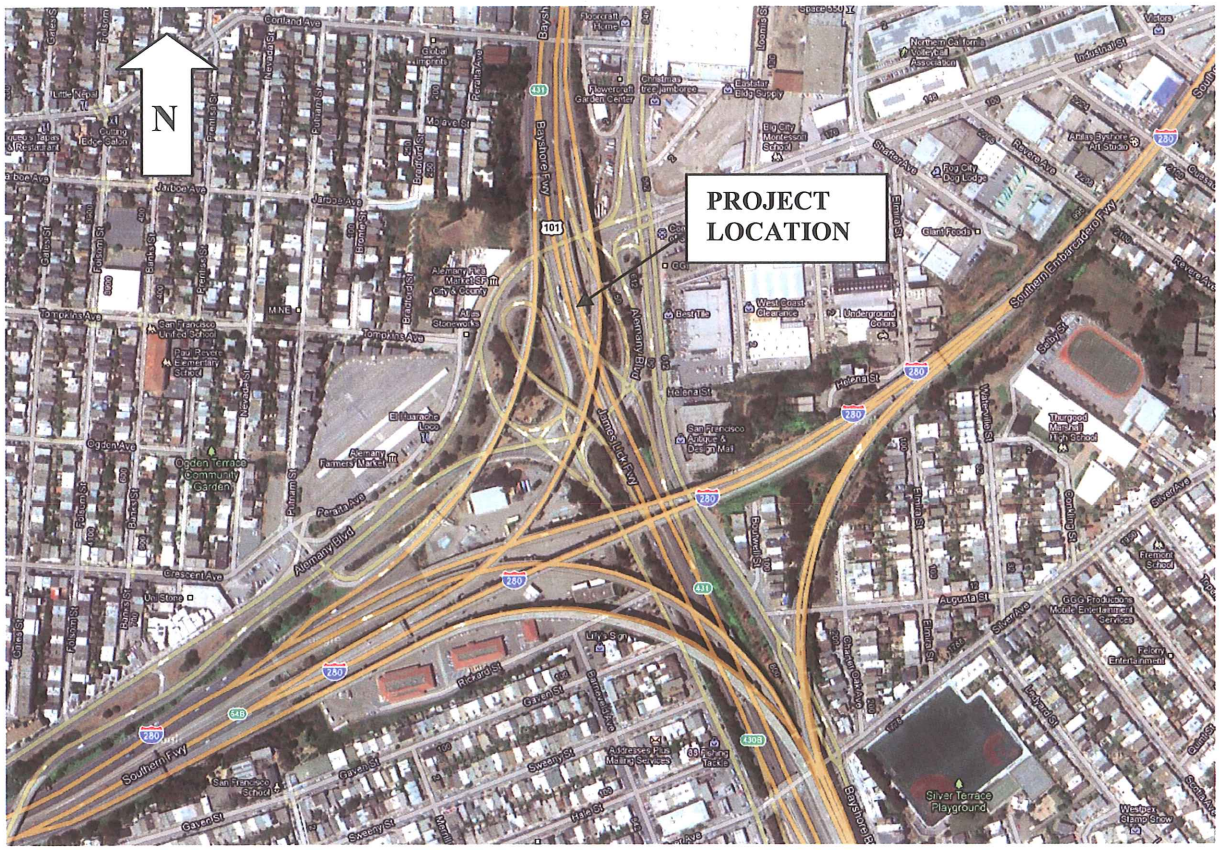

In the City and County of San Francisco
On Route 101 At Alemany Circle Undercrossing

04-SF-101-2.0
20.10.201.110
EA 3G620K
September 2011

This Project Scope Summary Report has been prepared under the direction of the following registered civil engineer. The registered civil engineer attests to the technical information contained herein and the engineering data upon which recommendations, conclusions, and decisions are based.

Gamini S. Randeni 9/13/11

REGISTERED CIVIL ENGINEER *DATE*

REGISTERED PROFESSIONAL ENGINEER
GAMINI I. RANDENI
C 053573
Exp. 6/30/13
CIVIL
STATE OF CALIFORNIA

Table of Contents

1.	INTRODUCTION AND BACKGROUND	1
2.	RECOMMENDATION	1
3.	PURPOSE AND NEED STATEMENT	2
4.	EXISTING FACILITY, DEFICIENCIES AND TRAFFIC DATA	2
5.	CORRIDOR AND SYSTEM COORDINATION	4
6.	ALTERNATIVES	5
7.	TRANSPORTATION MANAGEMENT	9
8.	RISK ASSESSMENT	10
9.	ENVIRONMENTAL DETERMINATION/DOCUMENT	10
10.	FUNDING/SCHEDULING	11
11.	FEDERAL COORDINATION	13
12.	SCOPING TEAM FIELD REVIEW ATTENDANCE ROSTER	14
13.	PROJECT REVIEWED BY	14
14.	ATTACHMENTS	14

1. INTRODUCTION AND BACKGROUND

Brief Project Description:

It is proposed to replace the concrete deck of Alemany Circle Undercrossing (Bridge No. 34-0033) on State Highway Route 101 in the City and County of San Francisco. Route 101 is part of the National Highway System, and is classified as an urban, principal arterial route. See Attachment A – Location Map.

See the Cost Estimate (Section 10A) for specific work items included in this project.

Project Limits [Dist., Co., Rte., PM]	04-SF-101-2.0
Capital Costs:	$14,358,000 $18,167,000 escalated to mid-construction in 2017
Right of way Costs:	$5,000
Funding Source:	20.10.201.110
Number of Alternatives:	Two
Recommended Alternative (for programming and scheduling):	Build (Alternative 2)
Type of Facility (conventional, expressway, freeway):	Freeway
Number of Structures:	One
Anticipated Environmental Determination/Document:	Initial Study or Focused Initial Study with proposed Negative Declaration or Mitigated Negative Declaration/Categorical Exclusion
Legal Description	In the City and County of San Francisco on Route 101 at Alemany Circle UC # 34-0033. Deck Replacement.

2. RECOMMENDATION

It is recommended that the project be approved, and that the project proceed to the next phase.

3. PURPOSE AND NEED STATEMENT

Need:

According to the Bridge Inspection Report, the existing structure was built over 60 years ago and currently has many localized deck failures, a severe size and density of deck cracking, and an active corrosion of deck reinforcement.

Purpose:

This project will restore the deck to a state of good repair, extend its service life, and improve ride quality.

4. EXISTING FACILITY, DEFICIENCIES AND TRAFFIC DATA

4A. Roadway Geometric Information

	Facility (1)	Min.	Through Traffic Lanes (2)			Paved Shoulder Width (3)		Median (4)	Shoulder is a Bicycle Lane (Y/N) (5)	Other Bicycle Lane Width (6)	Bicycle Route (7)	Facilities Adjacent to the Roadbed (8)
	Location	Curve Radius	No. of Lanes	Lane Width	Type (Flex, Rigid, or Compo-site)	Left	Right	Width	Width	Width	(Y/N)	(Code/ Width)
Existing	PM 2.0	2600 '	6	12'	Compo-site	3'	1'	8'	N	N/A	N	N/A
Proposed	PM 2.0	2600 '	6	12'	Compo-site	3'	2.5'	8'	N	N/A	N	N/A
	Min. 3R Stds.	2100'		12'		10'	10'	22'				

N/A – Not applicable.

Remarks: Per the guidance in Design Information Bulletin 79, Safety Screening and 2R Certification dated 9/19/2011 determined that this project be scoped and designed as a 2R project. The geometric features of the facility will not be degraded, and Design Exception fact sheet will not be required.

4B. Condition of Existing Facility (Repeat info for each homogeneous segment):

(1) Pedestrian Facility Data

Facility Type and Location(s)	**Meets ADA Standards?**	**If Facility does not meet ADA Standards, what feature(s) are not ADA compliant?**	**Status of Each Noncompliant Location**
Sidewalks:	*N/A*		
Curb Ramps:			
Crosswalks:			
Driveways:			
Shared bicycle/ pedestrian path:			
Others:			

Remarks: The Alemany Circle UC does not contain any pedestrian facility.

(2) Bicycle Path Data

Deficiency	Location *(Station, post mile limits or other reference points)*
N/A	

Remarks: The Alemany Circle UC does not contain any bicycle path.

4C. Structures Information

Structures	Width Between Curbs			Replace Bridge Railings	Vertical Clearance			Work Identified in STRAIN	Replace Bridge Approach Rail	Replace Bridge Approach Slab	
Name/No.	Exist	3R Std	Prop	(Y or N)	Exist	3R Std	Prop	(Y or N)	(Y or N)	(Y/N)	#
Alemany Circle UC/ 34-0033	38'	42' SB 50' NB	39.5'	Y	N/A			Y	Y	N	

Remarks

4D. Vehicle Traffic Data

Present Year ADT	160,806		
Construction Year ADT	167,130	10-Year ADT	177,670
DHV	11,283	20-Year ADT	188,210
D	0.58	% Trucks	2.46
T.I. (10-Year)	11.0	ESAL (10-Year)	5,391,000
T.I. (20-Year)	12.0	ESAL (20-Year)	11,142,000

Safety Field-Review August 24, 2011

Latest 3-Year Accident Data between June 1, 2007 and May 31, 2010:

Accidents Per Million Vehicle Miles (ACCS/MVM)					
Actual Rate			Average Rate		
Fatal	Fatal + Injury	Total	Fatal	Fatal + Injury	Total
0.000	0.16	0.40	0.017	0.52	1.70

Location of Accident Concentration: There were no locations of accident concentration. However, an investigation revealed that all the accidents involved rear-end collisions. 80% of these were caused by speeding and 20% by other violations by the driver not specified in the collision reports.

Corrective Strategy: Deck replacement will mitigate accidents with improved deck friction.

5. CORRIDOR AND SYSTEM COORDINATION

The following projects are planned in the vicinity:

Project	Location	Scope	Construction
ID: 0400000496 EA: 04-1A5511	SF-280-4.1/4.4	Upgrade bridge rails	Begin: Spring 2014 End: Summer 2015
ID: 0400000827 EA: 04-2A4901	SF-280-4.2/6.6	Bridge rehabilitation and drainage repair	Begin: Summer 2014 End: Fall 2015

6. ALTERNATIVES

6A. Rehabilitation Strategy:

There are two alternatives for this rehabilitation project.

1) No Build Alternative.

This alternative would lead to continued deterioration of the deck, continued repairs, decreased ride quality, and potentially decreased mobility and safety. Rehabilitation would still be required in the future.

2) Build Alternative.

Structure work includes replacement of existing concrete deck and barriers, modification of approach slabs and abutments, connection to steel girders, joint seal, and steel cleaning and painting. The Advanced Planning Study (APS) (See Attachment B) includes the following three construction staging alternatives, all involving major traffic impacts and will likely cause significant traffic delay:

i. Two lanes open and one lane closed in each direction for the duration of over a year. In each direction, one of the stages would close the number 2 lane while traffic would be diverted to the adjacent number 1 and 3 lanes (split traffic).

ii. Two lanes open and one lane closed in each direction for the duration of over a year. The median barrier would be removed to allow traffic crossing. During some construction stages, the 2 lanes of traffic would be diverted to the opposite direction (split roadway) in one side to allow work on the other side.

iii. Full freeway closure for the duration of two to three months.

Roadway work includes modification of roadway pavement, median barrier, and drainage features; traffic control system, traffic management measures, and ADA compliant features (such as curb ramps) on roadways under Alemany Circle Undercrossing.

6B. Design Exceptions:

Per the guidance in Design Information Bulletin 79, Safety Screening and 2R Certification dated 9/19/2011 determined this project to be scoped and designed as a 2R project. The geometric features of the facility will not be degraded, and Design Exception fact sheet will not be required.

6C. Environmental Compliance:

A Preliminary Environmental Analysis Report (PEAR) has been prepared for this project and is included as Attachment C.

6D. Hazardous waste disposal site required? If yes, where are sites?

An asbestos survey will be conducted during the design phase. Any material containing asbestos, lead and/or chromium will require special handling during removal and subsequent disposal. A special provision to address this concern will be included in the PS&E package.

6E. Other Agencies Involved (Permits/Approvals from Fish & Game, Corps of Engineers, Coastal Commission, etc.):

Coordination with City of San Francisco regarding issues that will affect local streets such as traffic detour routes and other TMP measures will likely be required.

6F. Materials and or disposal site needs and availability?

Any material that cannot be salvaged shall become the property of the contractor and be disposed of outside the State right of way in accordance with Caltrans standards and specifications.

6G. Highway planting and irrigation:

There are little existing vegetation and irrigation within the project limits. Impacts to highway planting and irrigation will be minimized through the installation of ESA fencing. Further investigations into the limits of staging operations outside of the bridge footprint will be investigated during the design phase. Modifications to the irrigation system to maintain water or removal of vegetation to accommodate construction will be limited as much as feasible.

6H. Roadside Design and Management:

Roadside design and management are not proposed for this project.

6I. Stormwater Compliance:

The Project will comply with the conditions of the Caltrans statewide National Pollutant Discharge Elimination System permit and the State Water Resources Control Board Construction General Permit. These permits require addressing the temporary water quality impacts resulting from construction activities and the post construction water quality impacts resulting from routine operations of the highway system.

To address the temporary water quality impacts resulting from the construction activities in this project, plans, special provisions, and estimate will be prepared and included in the contract documents for Water Pollution Control. Water Pollution Control consists of various temporary measures implemented during construction to control sedimentation, erosion and the discharge of other pollutants throughout the project limits. Special Provision(s) will require the contractor to prepare a Water Pollution Control Program and implement construction site Best Management Practices which may include; Sediment Control Practices, Soil Stabilization Practices, Wind Erosion Control, Tracking Control, Non-storm Water Management and Waste Management and Materials Pollution Controls. Plans and construction details, special provisions, and estimate will be prepared and included in the contract documents for "Water Pollution Control" for the construction contract.

To address post construction water quality impacts, all graded and disturbed soil areas, and staged construction areas, will be provided with permanent erosion control treatments, as referenced in the Caltrans Storm Water Quality Handbooks—Project Planning and Design Guide. Erosion Control consists of permanent vegetated or hard surface treatments to stabilize slopes and disturbed soil areas. Erosion Control measures will be provided on all disturbed soil areas resulting from the construction activities in this project.

Storm drain inlets accessible to pedestrians or bicyclists that have not already been stenciled with messages to assist in educating the public about storm water run-off pollution will be stenciled.

A Storm Water Data Report has been prepared and is included as Attachment D.

6J. Right of way Issues: include in guidance:

Right of way acquisition is not required. Field visit did not reveal existing utilities under the structure. However, utility verification will be needed. A Right of Way Data Sheet has been prepared and is included as Attachment E.

6K. Railroad Involvement:

There are no railroads within the project limits.

6L. Salvaging and recycling of hardware and other non-renewable resources:

There are no major items for salvaging and recycling. Materials reused or salvaged during construction should match with Caltrans standards.

6M. Prolonged temporary ramp closures:

Prolonged temporary ramp closures are not expected.

6N. Recycled Materials:

There are no major items to be recycled.

6O. Local and Regional Input:

Local and regional coordination will be necessary as part of traffic management.

6P. What are the consequences of not doing this entire project?

The existing deck will continue to deteriorate, resulting in decreased ride quality and increased maintenance costs; thereby impacting mobility. The scope of this project will eventually need to be undertaken, presumably at an even greater capital cost.

6Q. List all alternatives studied, cost, reasons not recommended, etc.:

To mitigate impacts and delays to motorists, the following construction methods or staging options were considered. Though not recommended at this time, they as well as other options will be explored and further studied in the next phase, and could be refined to be viable options.

Maintaining five traveled lanes with movable barrier and one flexible lane to change to either direction. The existing structure is constrained transversely at both sides by the connector bents and ramp structures, and cannot be widened without a major reconstruction of the adjacent structures. Without structure widening, 5 contiguous lanes could not be maintained during staged construction.

Rapid strength concrete (RSC). The use of RSC is not recommended for large deck replacement work due to well documented constructability concerns. Quality control for the RSC will be difficult, and the desired quality of the finished product is not guaranteed and may not meet the design criteria.

Precast panels. This is not recommended due to field construction difficulties and factors complicating the work. These include stud connector employment, skew magnitude and variability, super-elevation surface change, variable fillets at girders, cast-in-place connections, structure approach work, and profile grade change affecting the roadway approaches.

7. TRANSPORTATION MANAGEMENT

7A. Transportation Management Plan (TMP)

TMP will be developed as significant traffic delays are anticipated on the freeways and local streets. TMP measures include Public Information (rideshare, transit enhancement, advertising, and re-route of other impacted courier service coordination), additional signage (coordination of Changeable Message Sign and portable ones), incident management (Construction Zone Enhanced Enforcement Program, Freeway Service Patrol, and Traffic Management Team), additional construction strategies (flagging, coordination, and additional detours), demand management (funds for local and regional transit enhancement such as extra service and other support cost), and alternate route strategies (local facility improvements needed). A TMP Data Sheet has been prepared and is included as Attachment F.

Public Information will be emphasized through expanded efforts on public outreach. The available detour routes include the Alemany off-ramps and on-ramps north and south of the structure as "bypass", the northbound Third Street off-ramp, and the connectors to northbound and southbound Route 280. A quantitative analysis will be performed with the necessary traffic data to evaluate the traffic impacts.

7B. Vehicle Detection Systems

There are Traffic Operation System (TOS) elements such as Closed Circuit Television (CCTV) Camera and Traffic Monitoring Stations (TMS) with loop detectors embedded on the roadway in the project vicinity. Damage to these elements and associated supporting elements such as conduits, cables, and cabinets during construction will be required to be replaced. All existing TOS elements will be kept operational throughout the construction phase in accordance with Special Provision 86-031. Any TOS or ramp metering elements affected by this project will be relocated, modified, or fully replaced as necessary.

8. RISK ASSESSMENT

The major risk is the construction impacts on traffic mobility on a heavily traveled route. This could be mitigated with implementation of a comprehensive TMP as stated above. Additional measures might be necessary during the design and construction phases. For example, the City's demand for improvements to local detour roads could be mitigated with detailed traffic handling/detour plans through close coordination and good relationship working with City staff.

9. ENVIRONMENTAL DETERMINATION/DOCUMENT

A Preliminary Environmental Analysis Report (PEAR) was prepared and approved for the proposed project in conjunction with preparation of this Project Scope Summary Report - Structure Rehabilitation. A PEAR is not an environmental determination or document. The preliminary analysis, determinations, estimates and conclusions in the PEAR are approximate and are based on cursory analyses of probable effects of the proposed project as identified in this report.

The PEAR anticipates an Initial Study or Focused Initial Study with proposed Negative Declaration (ND) or Mitigated ND in compliance with California Environmental Quality Act (CEQA), and a Categorical Exclusion in compliance with National Environmental Policy Act (NEPA).

10. FUNDING/SCHEDULING

10A. Cost Estimate:

Proposed funding This project is being proposed as a candidate for the 2012 SHOPP to be funded from the Bridge Rehabilitation Program (201.110) for the 2015/2016 fiscal year.

STRAIN and other Structural Work (by Structure)			Yes/No	Cost($ x1000)
(A)	Replace			———
(B)	Rehab			–
	(a)	Deck	Yes	6,889
	(b)	Superstructure		———
	(c)	Substructure		———
	(d)	Joints	Yes	*
	(e)	Bearings		———
	(f)	Other		———
(C)	Scour Correction			———
(D)	Painting		Yes	*
(E)	Widening			———
(F)	Rail Replacement (without widening)		Yes	*
(G)	Strengthen			———
(H)	Seismic Retrofit			———
(I)	Vertical Clearance Adjustment			———
(J)	Drainage Rehab		Yes	*
(K)	Approach Slabs		Yes	*
STRUCTURE COSTS SUBTOTALS**				6,889

Notes: * included in the structure cost total
** assuming the most probable staging alternative ii

District Work

(A)	Traffic Control	Yes	1,500
(B)	Pavement (include remove and replace)	Yes	800
(C)	Bridge Approach Slab		____
(D)	Bridge Approach Guardrail		____
(E)	Drainage Adjustment and Rehab	Yes	200
(F)	Rock Slope Protection		____
(G)	Utility Relocation	Yes	5
(H)	Railroad Agreements		____
(I)	Right of Way		____
(J)	Environmental Compliance	Yes	125
(K)	Stormwater Compliance/Water Quality	Yes	175
(L)	Roadside Management		
	Gore Area Pavement		
	Pavement beyond Gore Area		____
	Miscellaneous Paving		____
	Maintenance Vehicle Pull outs		____
	Off-Freeway Access (gates, stairways, etc.)		____
	Roadside Facilities		____

(M) Other

Hazardous Waste Compliance	Yes	25
Highway Planting and Irrigation	Yes	25
ADA Compliance	Yes	100
Electrical	Yes	350
TMP	Yes	1,940
Public Info/Outreach	Yes	500
30% Contingency (including TRO and Mobilization)	Yes	1,724

DISTRICT COSTS SUBTOTALS 7,469

SUM OF SUBTOTALS (CURRENT)	14,358
Escalation 4% per year for 6 years to mid-construction 2017	3,809
TOTAL PROJECT COST (ESCALATED TO YEAR 2017)	18,167

10B. Project Support:

Support Cost Unit	PROJECT SUPPORT COMPONENTS								
	PA&ED 0 Phase		Design 1 Phase		Right of Way 2 Phase		Construction 3 Phase		Total
	Dist	DES	Dist	DES	Dist	DES	Dist	DES	
PY's	1.6	0.3	4.4	7.3	0.1	0	6.2	8.3	28.1
PS ($1000's)	280	50	790	1,310	20	0	1,120	1,500	5,070
PYE ($1000's)	0	0	250	0	0	0	0	0	250
Total Cost ($1000's)	280	50	1,040	1,310	20	0	1,120	1,500	5,320

10C. Project Schedule:

Milestones	Delivery Date (Month, Day, Year)
Begin Environmental	July 1, 2012
Notice of Intent (NOI)	N/A
Circulate DED	N/A
PA & ED	January 1, 2014
Regular Right of way	March 1, 2014
Project PS&E	September 1, 2015
Right of way Certification	January 1, 2016
Ready to List	February 1, 2016
Approve Contract	October 1, 2016
Contract Acceptance	April 1, 2018
End Project	April 1, 2020

11. FEDERAL COORDINATION

Federal Highway Administration (FHWA) involvement is delegated to Caltrans based on the Joint Stewardship and Oversight Agreement between Caltrans and FHWA dated October 14, 2010. Per SAFETEA-LU, this project is eligible for federal-aid funding and is considered to be STATE AUTHORIZED under current FHWA-Caltrans Stewardship Agreements.

12. SCOPING TEAM FIELD REVIEW ATTENDANCE ROSTER:

Attachment G Date 8/25/11

13. REVIEWS

Scoping team field review attendance roster (see above).

Project Reviewed by:

District Maintenance	Steven Rouse	Date 8/25/11
District Safety	John Thomas	Date 8/25/11
HQ Division of Design	Mike Van De Pol	Date 9/8/11
HQ Program Advisor	Takako Fujioka	Date 9/12/11
FHWA	N/A	Date_____
Others	N/A	Date_____

14. ATTACHMENTS

A - Location Map
B - Advance Planning Study/Typical Sections
C - PEAR
D - Storm Water Data Report
E - Right of Way Data Sheet
F - Transportation Management Plan Data Sheet
G - Scoping Team Field Review Attendance Roster

ATTACHMENT A

LOCATION MAP

INDEX OF PLANS

STATE OF CALIFORNIA

DEPARTMENT OF TRANSPORTATION

PROJECT PLANS FOR CONSTRUCTION ON

STATE HIGHWAY

IN THE CITY AND COUNTY OF SAN FRANCISCO AT THE ALEMANY CIRCLE UNDERCROSSING

TO BE SUPPLEMENTED BY STANDARD PLANS DATED MAY 2006

Dist	COUNTY	ROUTE	POST MILES TOTAL PROJECT	SHEET No.	TOTAL SHEETS
04	SF	101	2.03		

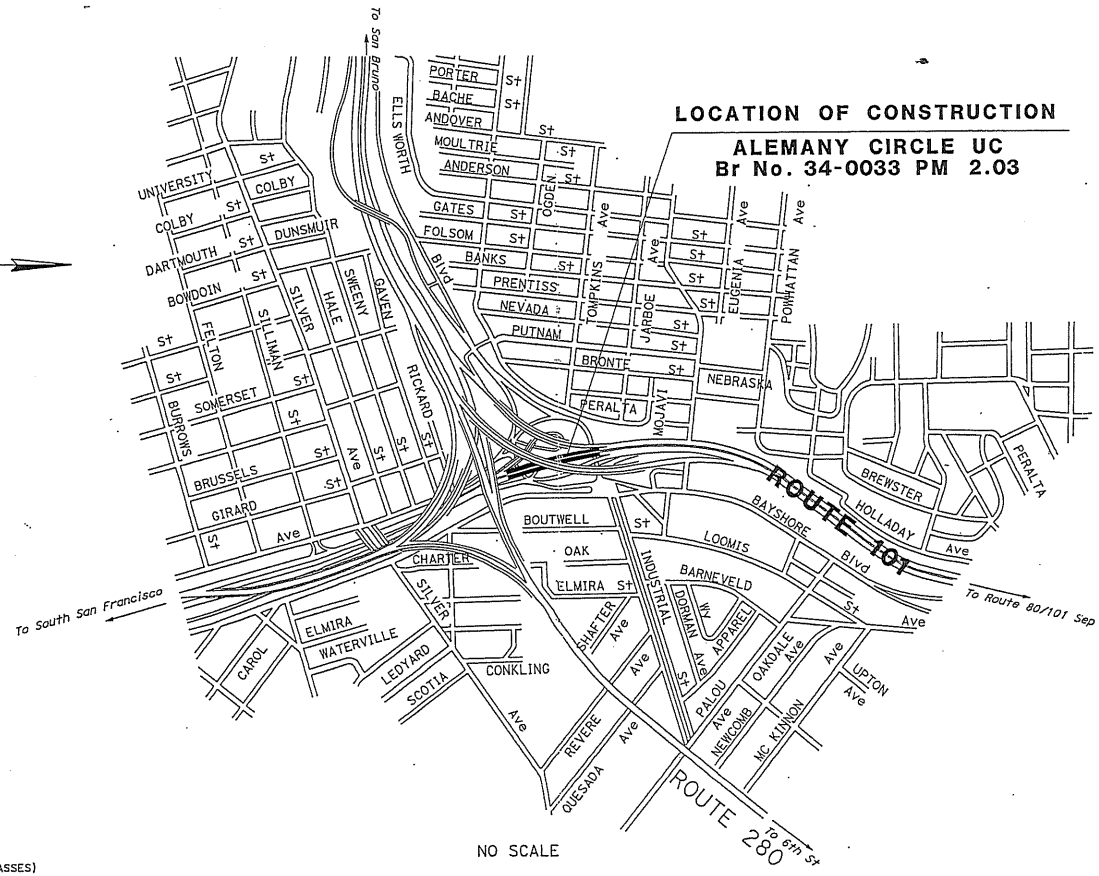

NO SCALE

ATTACHMENT A

PROJECT ENGINEER DATE
REGISTERED CIVIL ENGINEER

REGISTERED PROFESSIONAL ENGINEER No. Exp. CIVIL STATE OF CALIFORNIA

PLANS APPROVAL DATE

THE STATE OF CALIFORNIA OR ITS OFFICERS OR AGENTS SHALL NOT BE RESPONSIBLE FOR THE ACCURACY OR COMPLETENESS OF SCANNED COPIES OF THIS PLAN SHEET.

CONTRACT No.	04-3G620K
PROJECT ID	0000000000

PROJECT MANAGER

DESIGN ENGINEER

THE CONTRACTOR SHALL POSSESS THE CLASS (OR CLASSES) OF LICENSE AS SPECIFIED IN THE "NOTICE TO BIDDERS."

LAST REVISION 08-19-11 DATE PLOTTED => 12-SEP-2011 TIME PLOTTED => 13:32

RELATIVE BORDER SCALE 0 1 2 3 USERNAME => s118006

UNIT 0707 PROJECT NUMBER & PHASE 00000000001

ATTACHMENT B

ADVANCE PLANNING STUDY/TYPICAL SECTIONS

STATE OF CALIFORNIA - DEPARTMENT OF TRANSPORTATION - DIVISION OF STRUCTURES

DIST	COUNTY	ROUTE	POST MILE
04	SF	101	2.03

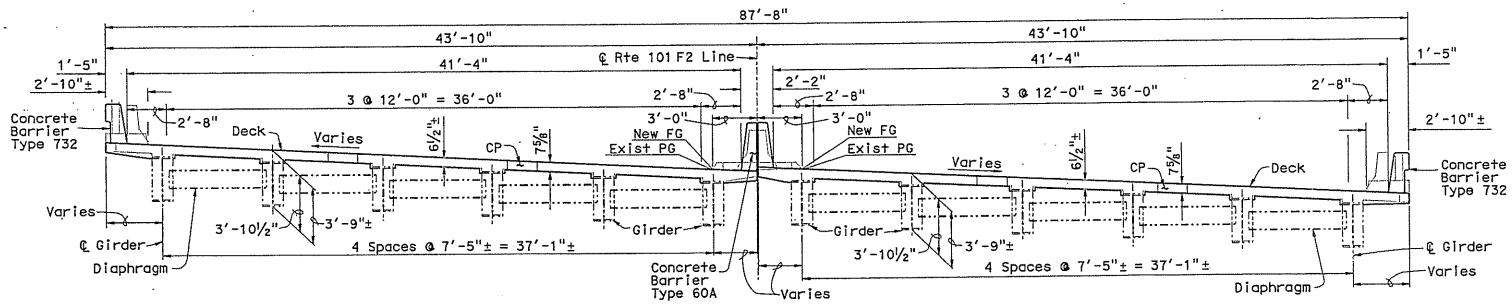

TYPICAL SECTION

1" = ⅛"

Permanent Steel Deck Forms Not Shown

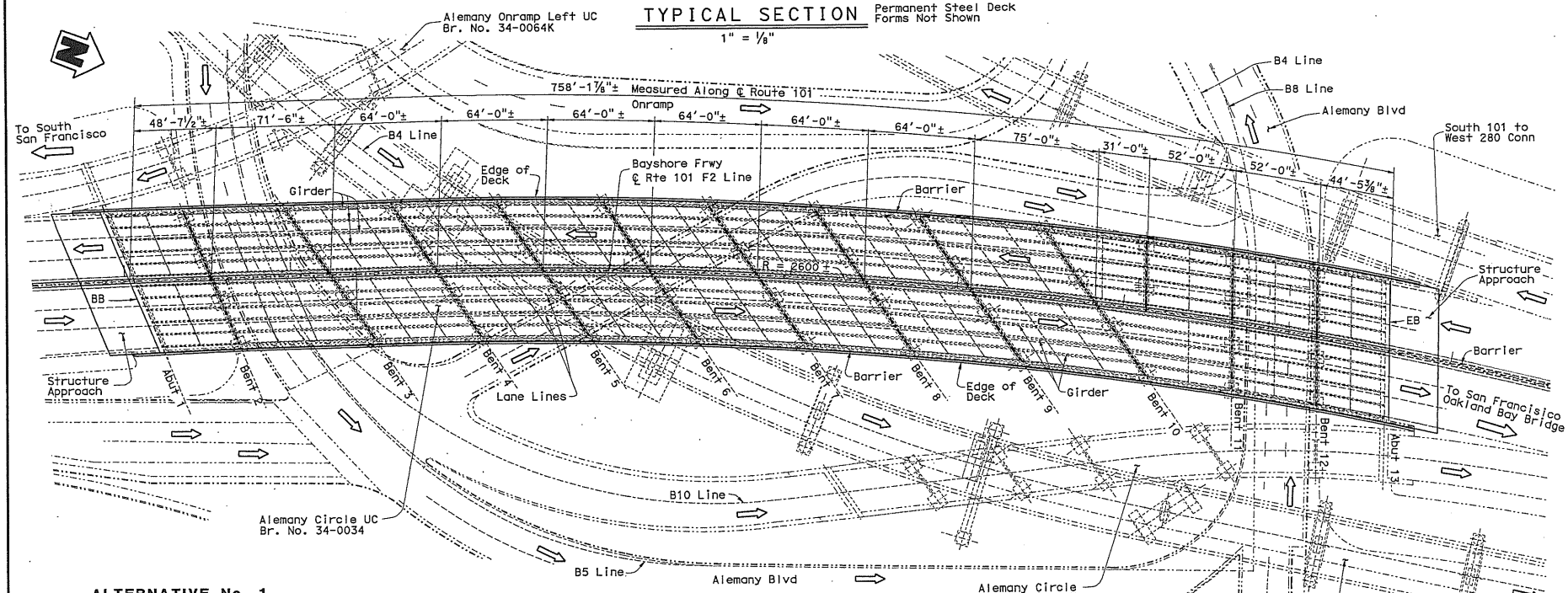

PLAN

1" = 60'

ALTERNATIVE No. 1

DATE OF ESTIMATE		09-06-2011
BRIDGE REMOVAL	=	
STRUCTURE DEPTH	=	3'-10½"
STRUCTURE LENGTH	=	758'-1⅞"±
STRUCTURE WIDTH	=	87'-10"±
AREA	=	66627 SQFT±
COST INCLUDING 10% MOBILIZATION & 40% CONTINGENCY	=	$6,614,000
COST/AREA	=	99.27 $/SQFT

For Stage Construction Details, see Sheets 2 Through 7 of 8

Bridge Elevation Not Shown

For Notes and Assumptions, see Sheet 8 of 8

Skew Varies
CP = Closure Pour
-·-·-·- Denotes Existing
——— Denotes New Construction

DESIGNED BY	M. Van De Pol	DATE	8/2011
DRAWN BY	M. Van De Pol	DATE	8/2011
CHECKED BY	J. O'Brien	DATE	8/2011
APPROVED	G. Danke	DATE	8/2011

STRUCTURE DESIGN BRANCH 9

PLANNING STUDY

ALEMANY CIRCLE UNDERCROSSING

DECK REPLACEMENT

BRIDGE NO. 34-0033 | UNIT: 04

SCALE: Varies | PROJECT NUMBER & PHASE: 0412000141 K

ALTERNATIVE No. 1

FILE => 04-0E0901-alemanyapsalt101.dgn

CONTRACT NO.: 0412000141 K

SHEET 1 OF 8

STRUCTURES DESIGN ADVANCE PLANNING STUDY SHEET (ENGLISH) (REV. 08-09-10)

USERNAME => s110089 DATE PLOTTED => 09-SEP-2011 TIME PLOTTED => 12:22

ATTACHMENT B

STATE OF CALIFORNIA - DEPARTMENT OF TRANSPORTATION - DIVISION OF STRUCTURES

DIST	COUNTY	ROUTE	POST MILE
04	SF	101	2.03

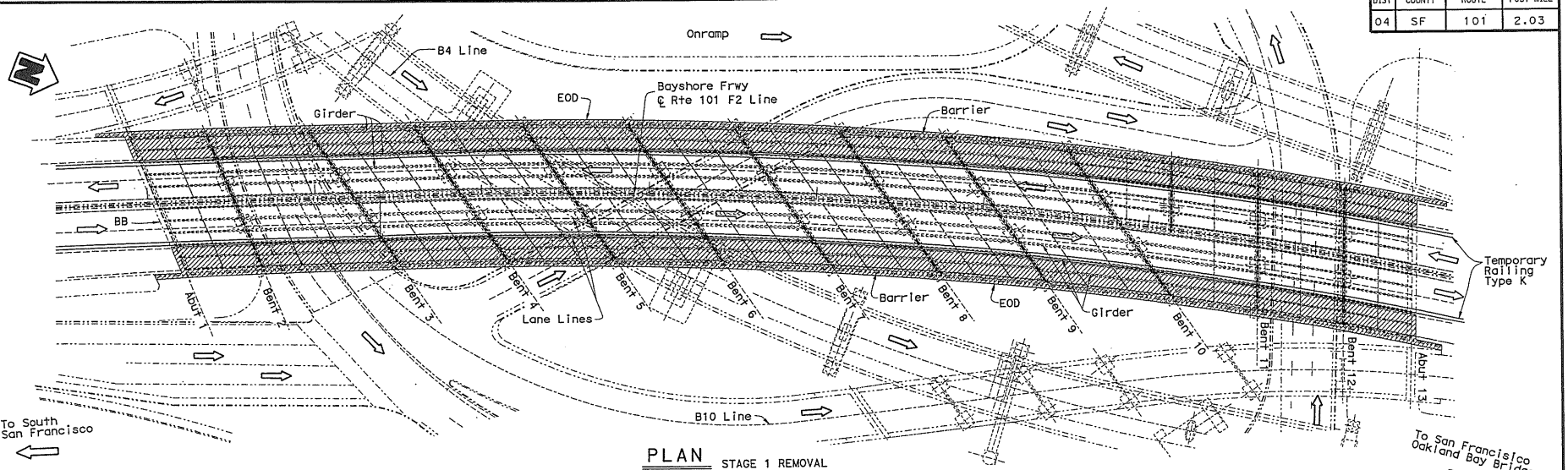

PLAN
1" = 60'
STAGE 1 REMOVAL

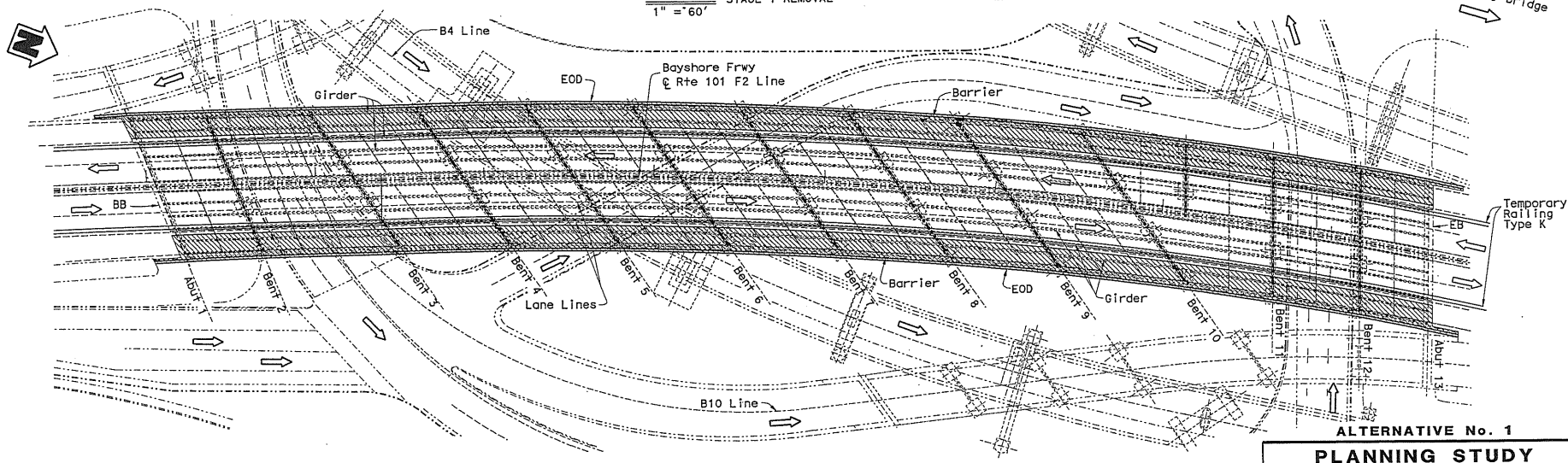

PLAN
1" = 60'
STAGE 1 CONSTRUCTION

Denotes Limits of Removal of Existing Deck

Denotes Limits of Construction of Existing Deck

Approach Slabs Not Shown

For Notes and Assumptions, see Sheet 8 of 8

For Typical Sections Associated With This Stage, see Sheet 3 of 8

Denotes Existing

Denotes New Construction

ALTERNATIVE No. 1

DESIGNED BY M. Van De Pol	DATE 8/2011	STRUCTURE DESIGN BRANCH 9	PLANNING STUDY
DRAWN BY M. Van De Pol	DATE 8/2011		ALEMANY CIRCLE UNDERCROSSING
CHECKED BY J. O'Brien	DATE 8/2011		DECK REPLACEMENT
APPROVED G. Danke	DATE 8/2011		BRIDGE NO. 34-0033 / UNIT: 04
			SCALE: Varies / PROJECT NUMBER & PHASE: 0412000141 K

FILE => 04-0E0901-alemanyapsalt102.dgn

CONTRACT NO.: 0412000141 K

SHEET 2 OF 8

USERNAME => s110089 DATE PLOTTED => 09-SEP-2011 TIME PLOTTED => 12:22

STRUCTURES DESIGN ADVANCE PLANNING STUDY SHEET (ENGLISH) (REV. 08-09-10)

STATE OF CALIFORNIA - DEPARTMENT OF TRANSPORTATION - DIVISION OF STRUCTURES

DIST	COUNTY	ROUTE	POST MILE
04	SF	101	2.03

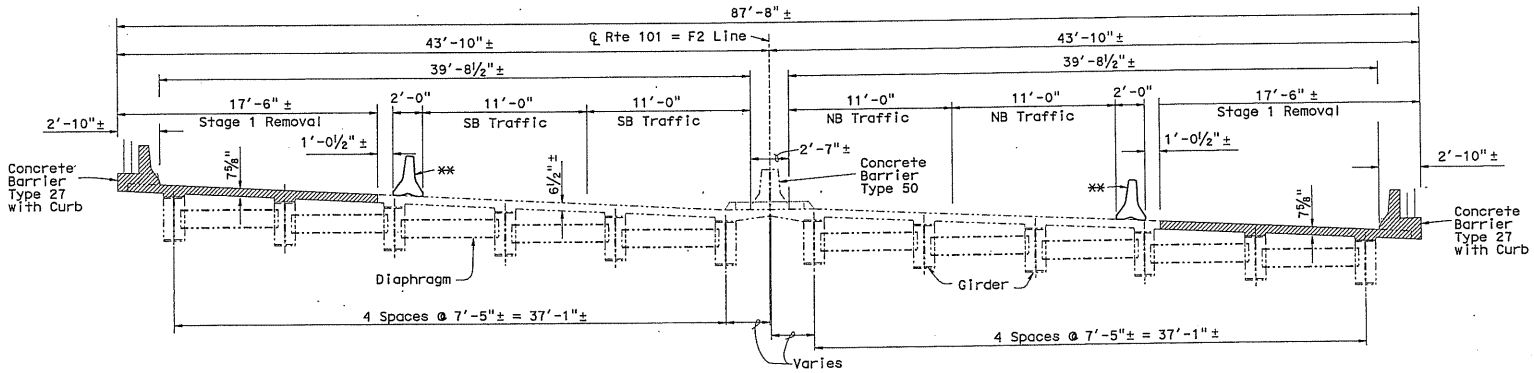

TYPICAL SECTION STAGE 1 REMOVAL

1" = ⅛"

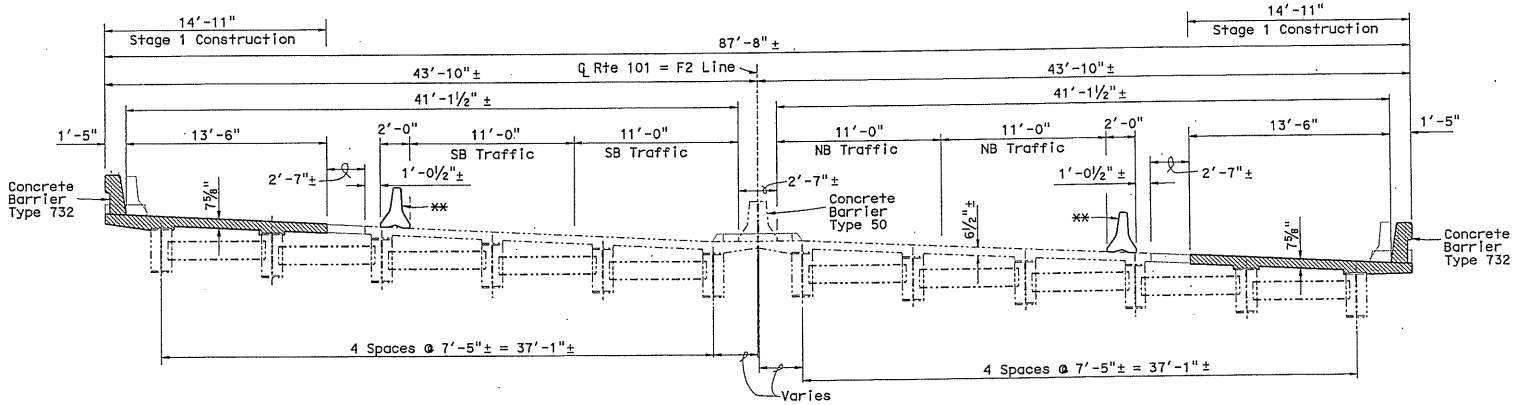

TYPICAL SECTION STAGE 1 CONSTRUCTION

1" = ⅛"

Denotes Limits of Removal of Existing Deck

Denotes Limits of Construction of Existing Deck

Permanent Steel Deck Forms Not Shown

For Notes and Assumptions, see Sheet 8 of 8

For Plans Associated With This Stage, see Sheet 2 of 8

** Temporary Railing Type K

------- Denotes Existing

——— Denotes New Construction

ALTERNATIVE No. 1

PLANNING STUDY

ALEMANY CIRCLE UNDERCROSSING

DECK REPLACEMENT

DESIGNED BY M. Van De Pol	DATE 8/2011	STRUCTURE DESIGN BRANCH 9	BRIDGE NO. 34-0033 / UNIT: 04
DRAWN BY M. Van De Pol	DATE 8/2011		
CHECKED BY J. O'Brien	DATE 8/2011		SCALE: Varies / PROJECT NUMBER & PHASE: 0412000141 K
APPROVED G. Danke	DATE 8/2011		

FILE => 04-OE0901-alemanyapsalt103.dgn

CONTRACT NO.: 0412000141 K

SHEET 3 OF 8

STRUCTURES DESIGN ADVANCE PLANNING STUDY SHEET (ENGLISH) (REV. 08-09-10)

USERNAME => s110089 DATE PLOTTED => 09-SEP-2011 TIME PLOTTED => 12:23

STATE OF CALIFORNIA - DEPARTMENT OF TRANSPORTATION - DIVISION OF STRUCTURES

DIST	COUNTY	ROUTE	POST MILE
04	SF	101	2.03

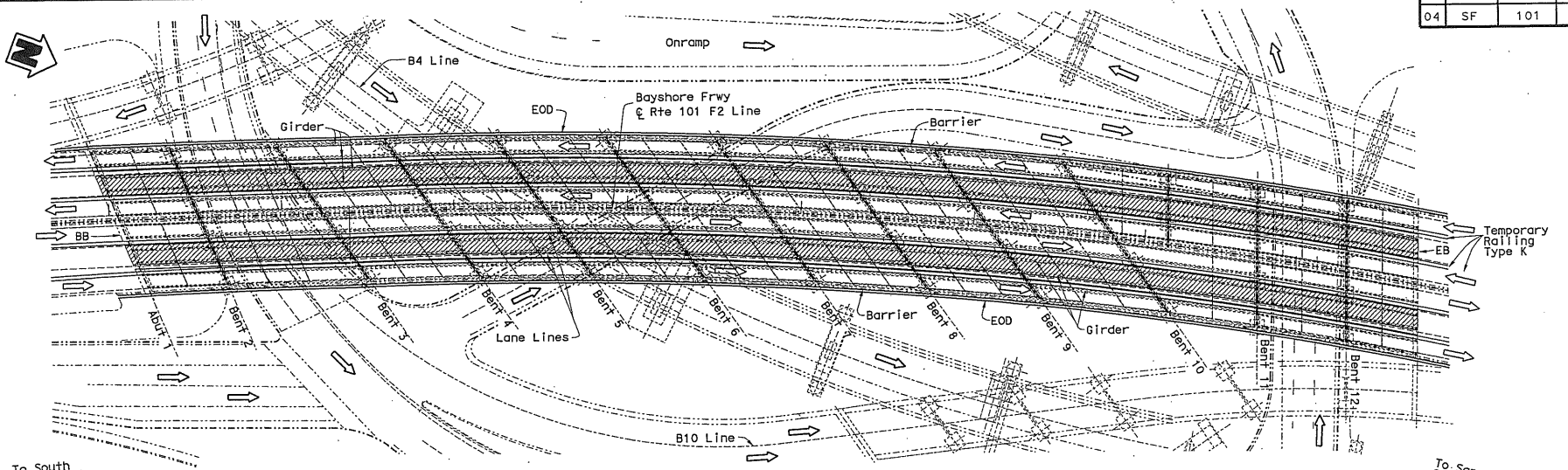

PLAN STAGE 2 REMOVAL
1" = 60'

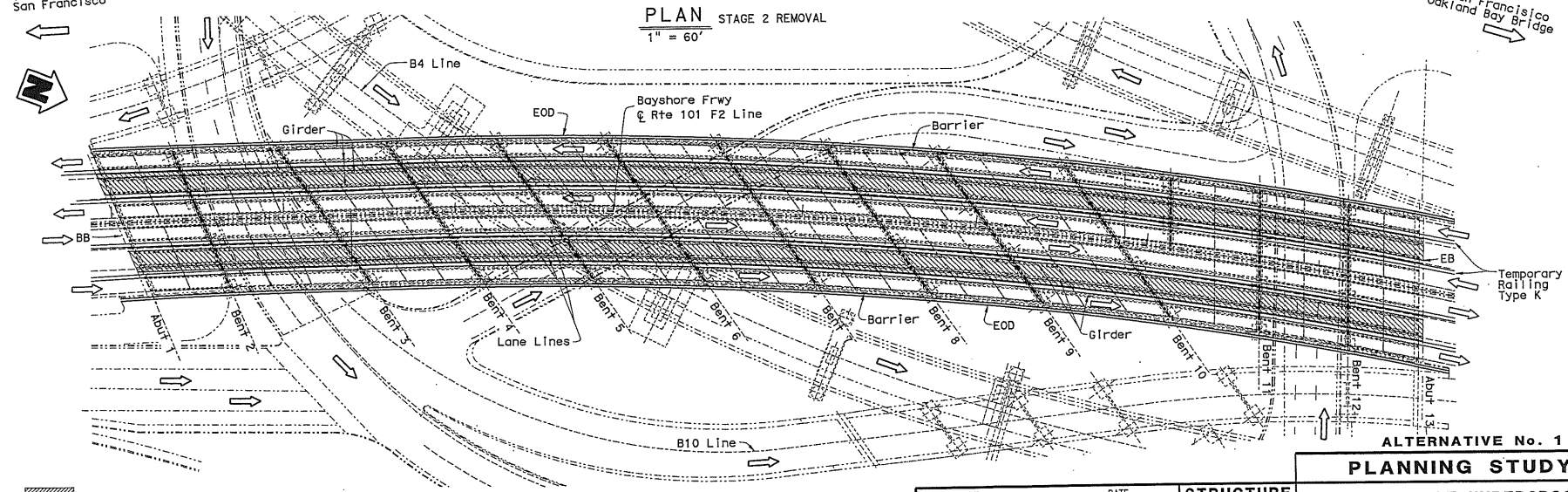

ALTERNATIVE No. 1

Denotes Limits of Removal of Existing Deck

Denotes Limits of Construction of Existing Deck

Approach Slabs Not Shown

For Notes and Assumptions, see Sheet 8 of 8

For Typical Sections Associated With This Stage, see Sheet 5 of 8

PLAN STAGE 2 CONSTRUCTION
1" = 60'

-·-·-·- Denotes Existing

——— Denotes New Construction

DESIGNED BY M. Van De Pol	DATE 8/2011	STRUCTURE DESIGN BRANCH 9	PLANNING STUDY
DRAWN BY M. Van De Pol	DATE 8/2011		ALEMANY CIRCLE UNDERCROSSING
CHECKED BY J. O'Brien	DATE 8/2011		DECK REPLACEMENT
APPROVED G. Danke	DATE 8/2011		BRIDGE NO. 34-0033 / UNIT: 04
			SCALE: Varies / PROJECT NUMBER & PHASE: 0412000141 K

FILE => 04-0E0901-alemanyapsalt104.dgn

CONTRACT NO.: 0412000141 K

SHEET 4 OF 8

USERNAME => s110089 DATE PLOTTED => 09-SEP-2011 TIME PLOTTED => 12:23

STRUCTURES DESIGN ADVANCE PLANNING STUDY SHEET (ENGLISH) (REV. 08-09-10)

STATE OF CALIFORNIA - DEPARTMENT OF TRANSPORTATION - DIVISION OF STRUCTURES

DIST	COUNTY	ROUTE	POST MILE
04	SF	101	2.03

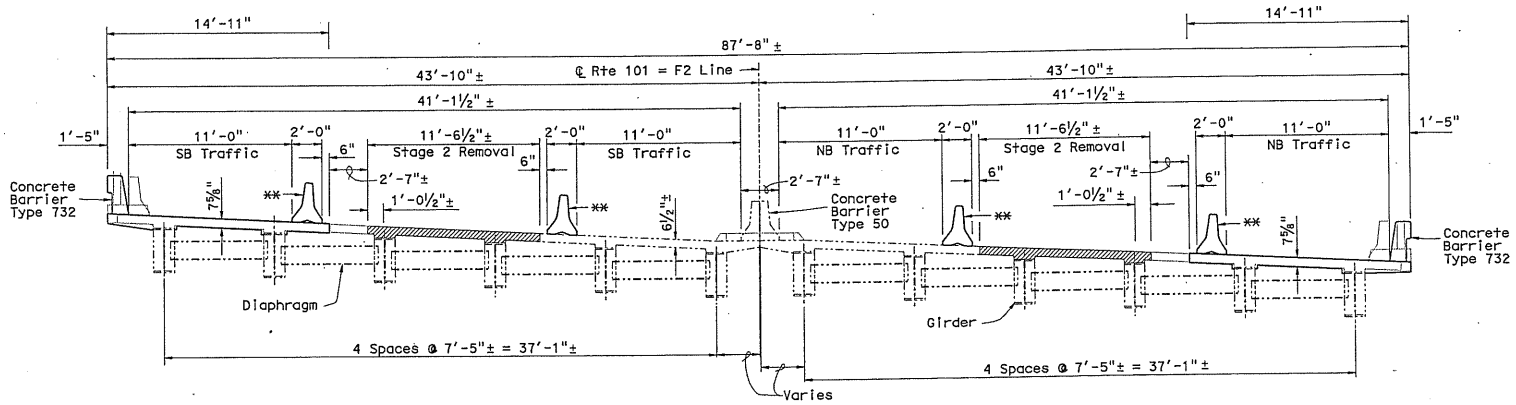

TYPICAL SECTION STAGE 2 REMOVAL

1" = ⅛"

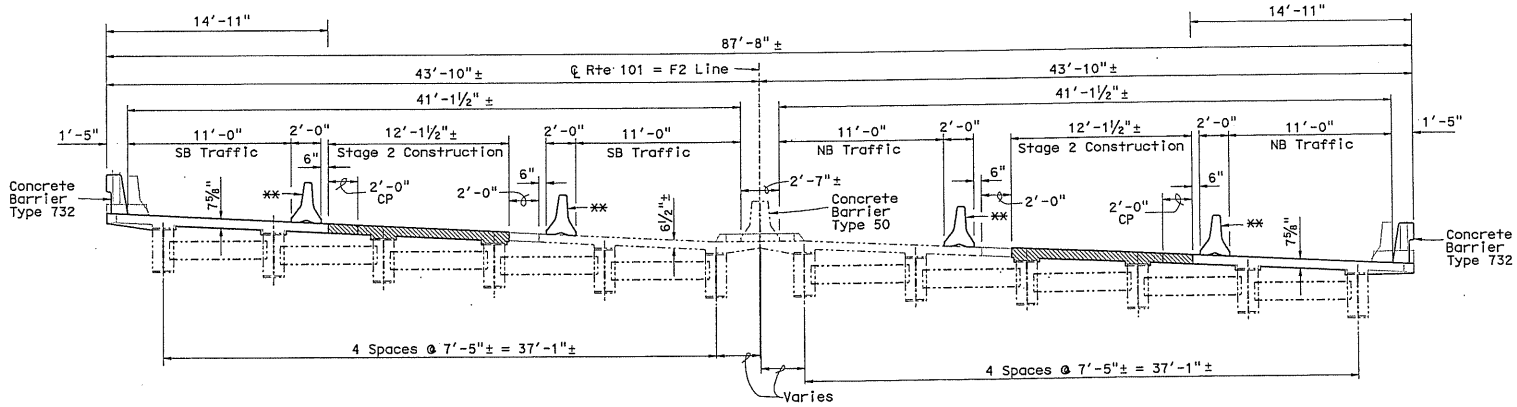

TYPICAL SECTION STAGE 2 CONSTRUCTION

1" = ⅙"

Denotes Limits of Removal of Existing Deck

Denotes Limits of Construction of Existing Deck

Permanent Steel Deck Forms Not Shown

For Notes and Assumptions, see Sheet 8 of 8

For Plans Associated With This Stage, see Sheet 4 of 8

CP = Closure Pour

** Temporary Railing Type K

-·-·-·- Denotes Existing

——— Denotes New Construction

DESIGNED BY	M. Van De Pol	DATE	8/2011
DRAWN BY	M. Van De Pol	DATE	8/2011
CHECKED BY	J. O'Brien	DATE	8/2011
APPROVED	G. Danke	DATE	8/2011

STRUCTURE DESIGN BRANCH 9

ALTERNATIVE No. 1

PLANNING STUDY

ALEMANY CIRCLE UNDERCROSSING

DECK REPLACEMENT

BRIDGE NO. 34-0033 | UNIT: 04

SCALE: Varies | PROJECT NUMBER & PHASE: 0412000141 K

FILE => 04-0E0901-alemanyapsalt105.dgn

CONTRACT NO.: 0412000141 K

SHEET 5 OF 8

USERNAME => s110089 DATE PLOTTED => 09-SEP-2011 TIME PLOTTED => 12:23

STRUCTURES DESIGN ADVANCE PLANNING STUDY SHEET (ENGLISH) (REV. 08-09-10)

STATE OF CALIFORNIA - DEPARTMENT OF TRANSPORTATION - DIVISION OF STRUCTURES

DIST	COUNTY	ROUTE	POST MILE
04	SF	101	2.03

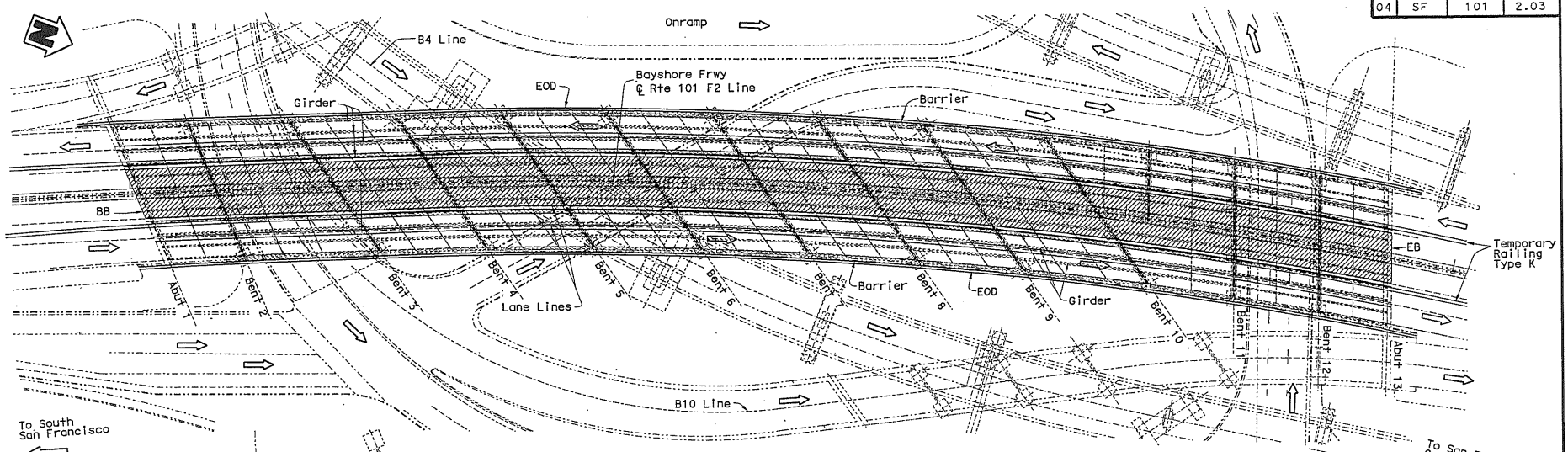

PLAN STAGE 3 REMOVAL
1" = 60'

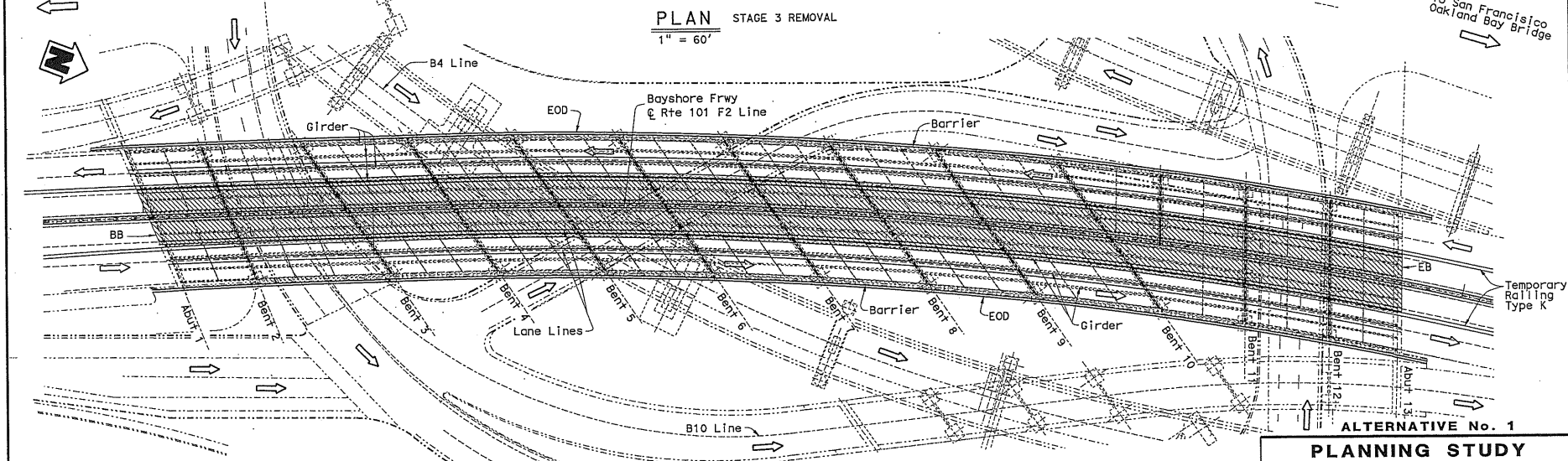

PLAN STAGE 3 CONSTRUCTION
1" = 60'

ALTERNATIVE No. 1

Denotes Limits of Removal of Existing Deck

Denotes Limits of Construction of Existing Deck

Structure Approach Not Shown

For Notes and Assumptions, see Sheet 8 of 8

For Typical Sections Associated With This Stage, see Sheet 7 of 8

Denotes Existing

Denotes New Construction

DESIGNED BY M. Van De Pol	DATE 8/2011	STRUCTURE DESIGN BRANCH 9	PLANNING STUDY
DRAWN BY M. Van De Pol	DATE 8/2011		ALEMANY CIRCLE UNDERCROSSING
CHECKED BY J. O'Brien	DATE 8/2011		DECK REPLACEMENT
APPROVED G. Danke	DATE 8/2011		BRIDGE NO. 34-0033 / UNIT: 04
			SCALE: Varies / PROJECT NUMBER & PHASE: 0412000141 K

FILE => 04-0E0901-alemanyapsal1106.dgn

CONTRACT NO.: 0412000141 K

SHEET 6 OF 8

STRUCTURES DESIGN ADVANCE PLANNING STUDY SHEET (ENGLISH) (REV. 08-09-10)

USERNAME => a110089 DATE PLOTTED => 09-SEP-2011 TIME PLOTTED => 12:23

STATE OF CALIFORNIA - DEPARTMENT OF TRANSPORTATION - DIVISION OF STRUCTURES

DIST	COUNTY	ROUTE	POST MILE
04	SF	101	2.03

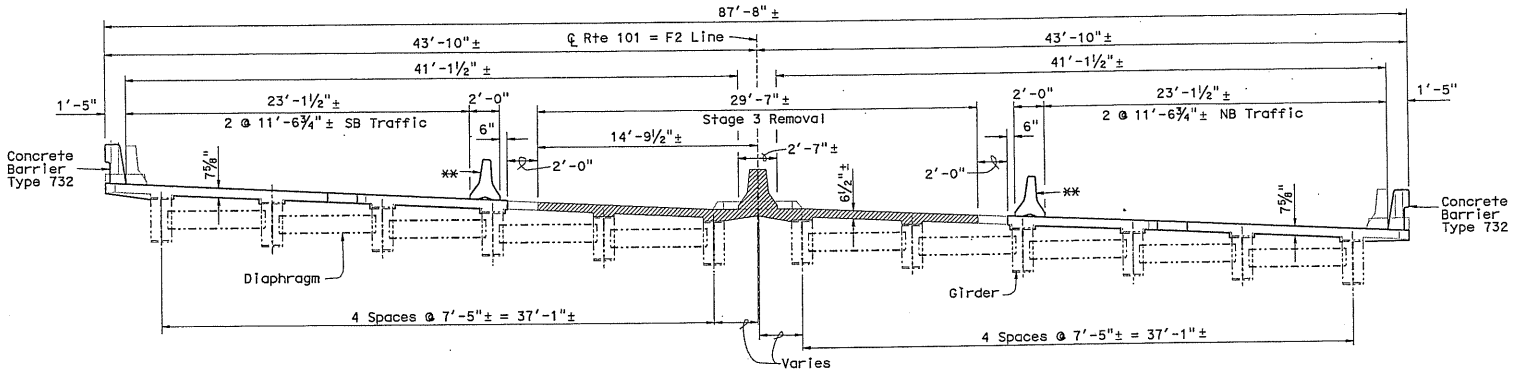

TYPICAL SECTION STAGE 3 REMOVAL

1" = ⅛"

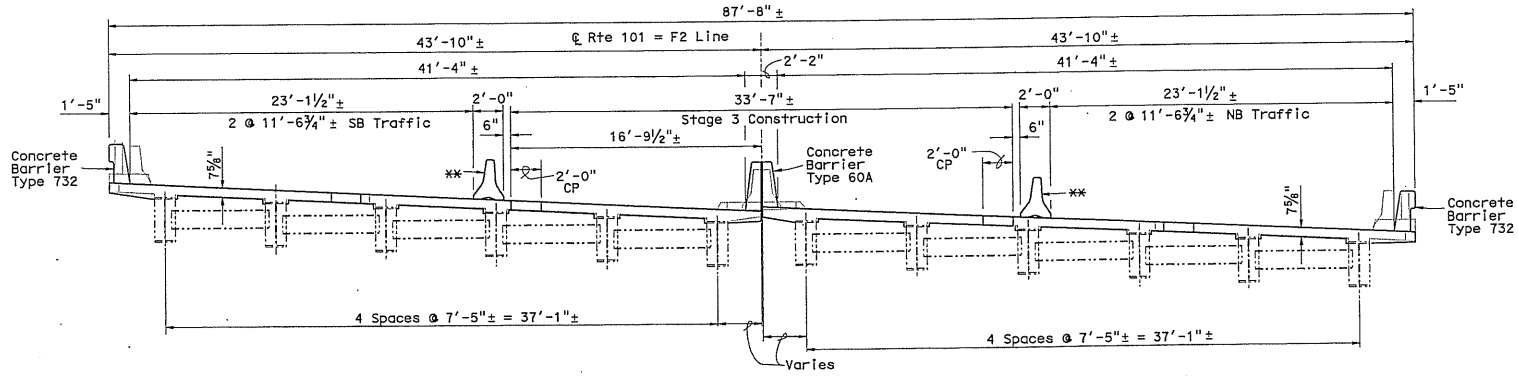

TYPICAL SECTION STAGE 3 CONSTRUCTION

1" = ⅛"

Denotes Limits of Removal of Existing Deck

Denotes Limits of Construction of Existing Deck

Permanent Steel Deck Forms Not Shown

For Notes and Assumptions, see Sheet 8 of 8

For Plans Associated With This Stage, see Sheet 6 of 8

CP = Closure Pour

** Temporary Railing Type K

------ Denotes Existing

——— Denotes New Construction

DESIGNED BY M. Van De Pol	DATE 8/2011	STRUCTURE DESIGN BRANCH 9	ALTERNATIVE No. 1
DRAWN BY M. Van De Pol	DATE 8/2011		PLANNING STUDY
CHECKED BY J. O'Brien	DATE 8/2011		ALEMANY CIRCLE UNDERCROSSING
APPROVED G. Danke	DATE 8/2011		DECK REPLACEMENT
			BRIDGE NO. 34-0033 / UNIT: 04
			SCALE: Varies / PROJECT NUMBER & PHASE: 0412000141 K

FILE => 04-0E0901-alemanyapsalt107.dgn

CONTRACT NO.: 0412000141 K

SHEET 7 OF 8

USERNAME => s110089 DATE PLOTTED => 09-SEP-2011 TIME PLOTTED => 12:23

STRUCTURES DESIGN ADVANCE PLANNING STUDY SHEET (ENGLISH) (REV. 08-09-10)

STATE OF CALIFORNIA - DEPARTMENT OF TRANSPORTATION - DIVISION OF STRUCTURES

DIST	COUNTY	ROUTE	POST MILE
04	SF	101	2.03

DESIGN AND CONSTRUCTION NOTES AND ASSUMPTIONS

1. Traffic will pass under and over the structure during construction
2. Traffic will pass on the structure during construction
3. Lane closures and width reductions will be required for construction
4. Minimum of three stages of construction will be required
5. Falsework will not be required for construction
6. Temporary K-Rail will be required for traffic handling
7. No substructure work will be performed as part of this study
8. Shoring will not be required for construction
9. Temporary Night closure will be required for removal and construction
10. Contaminated/hazardous materials is anticipated
11. Epoxy coated reinforcement will be required
12. Construction access difficulties are anticipated at deck level
13. Utilities assumed to be in present with construction operations
14. Vertical clearance is not considered to be an issue
15. Seasonal and daily construction time restrictions anticipated
16. R/W issues are not anticipated
17. Night work along with temporary lane closures will be needed.
18. Construction equipment size and placement could be issues of concern
19. Construction equipment and materials storage space not an issue
20. No subsurface investigations will be required for design
21. Structure drainage system incorporated into study
22. Accelerated construction schedule anticipated
23. Architectural treatment not anticipated
24. Noise restrictions not anticipated
25. No Liquefaction potential considered in design
26. Detour will not be required for construction
27. Temporary supports will not be required for construction
28. Shoring will not be required for staged removal
29. Multiple K-Rail configurations/shifts will be required for construction
30. Staged structure removal difficulties anticipated
31. Protective covers required for structure removal
32. Profile grade modifications will occur due to deck thickness change
33. Superelevation modifications is anticipated
34. Assume two lanes of traffic each way during construction
35. Structure Approach Slabs incorporated into study
36. Small cranes to be employed for deck lifting
37. Slope Paving not incorporated into the study
38. No slope benching anticipated
39. Excavation anticipated for structure approach slab work only
40. Joint seal replacement incorporated in the study
41. Approach work up to structure approach slabs by District
42. Median barrier work limits defined by ends of structure approach slabs
43. Edge of deck barrier work limits defined by end of wingwalls
44. Median barrier work limits defined by ends of structure approach slabs
45. Survey of structure girder elevations incorporated into study
46. Protection system for deck removal included in study
47. Spot blast and clean girders included in study
48. Clean and paint structural steel included in study
49. Earthquake retofit work considered unnecessary for this study
50. Consider all structure work performed from deck level
51. No dropping of concrete to surfaces below allowed
52. Special deck removal operations considered. See sequence
53. Prefabricated deck rebar cage use anticipated
54. No new chain link railing anticipated on structure
55. No special high strength concrete anticipated for use
56. Stud connectors to be employed to make the deck composite
57. Epoxy coated rebar employed for all applications
58. Equipment access difficulties anticipated at deck level
59. Drill and bond dowels to be employed at abutments
60. Paving notch extensions incorporated for structure approaches
61. Existing lead paint anticipated, with associated containment system
62. Existing utility temporary support system required
63. Conduits incorporated into new barriers at edge of decks
64. Drainage system work incorporated into study

GENERAL COMMENT

Deck replacement for this structure will be a complicated undertaking. Multiple constraints imposed, place limits on the design and construction operations to be employed. A large number of deck replacement alternatives were evaluated as part of this study. The removal and construction design and details shown herein, represent one selected alternative. Additional traffic handling studies are required to address remaining concerns.

APPROXIMATE CONSTRUCTION SEQUENCE

Longitudinal Progression of Work Along Length of Structure
Typical Per Stage Shown

1. Remove barrier
2. Saw cut existing deck total depth into segments
3. Core holes in existing deck for segment lifting
4. Lift deck segments off girders
5. Chip retained deck concrete from girder flanges
6. Remove abutment portions and approach sections
7. Spot blast and clean girders
8. Place permanent steel deck forms
9. Place stud connectors on girders
10. Place deck and abutment reinforcement
11. Cast deck and abutment concrete and cure
12. Place barrier reinforcement
13. Cast barrier concrete and cure
14. Grade for structure approaches
15. Place structure approach reinforcement
16. Cast structure approach concrete and cure
17. Place joint seals
18. Clean and paint structural steel

ESTIMATING NOTES AND ASSUMPTIONS

1. Three stage approach with long-term closures
2. Split traffic lanes employed.
3. Alternative 3 used as a base case for unit prices
4. Alternative 3 unit prices increased by 20%
5. Unit prices derived from 04-1A3201 BEES- similar project
6. Temporary Railing Type K not included in estimate
7. Roadway approach work not included in estimate
8. Barrier transitions not included in estimate
9. No bridge mounted utility work included in estimate
10. No bridge mounted light standards included in estimate
11. Lightweight concrete not considered for employment
12. Epoxy reinforcement employed in deck and barriers
13. Protection system employed- unit price based deck area
14. Girder survey - unit price based off concrete price

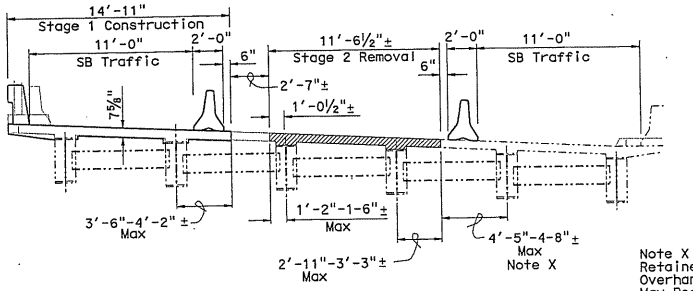

Note X
Retained Existing Deck Overhang During Stage May Require Temporary Intermediate Supports.

STAGE 2 REMOVAL

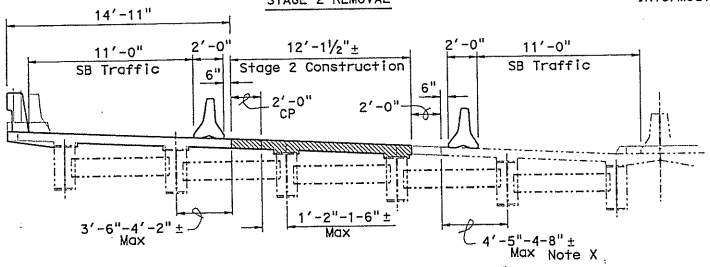

STAGE 2 CONSTRUCTION

PART TYPICAL SECTIONS

1" = ⅛"

Temporary Deck Overhang Dimensions
Deck Forms Not Shown

Denotes Existing
Denotes New Construction

ALTERNATIVE No. 1

PLANNING STUDY

ALEMANY CIRCLE UNDERCROSSING

DECK REPLACEMENT

DESIGNED BY M. Van De Pol	DATE 8/2011	STRUCTURE DESIGN BRANCH 9	BRIDGE No. 34-0033 / UNIT: 04
DRAWN BY M. Van De Pol	DATE 8/2011		
CHECKED BY J. O'Brien	DATE 8/2011		SCALE: Varies / PROJECT NUMBER & PHASE: 0412000141 K
APPROVED G. Danke	DATE 8/2011		

FILE => 04-0E0901-alemanyapsalt108xtroestlmnotes.dgn
CONTRACT NO.: 0412000141 K
SHEET 8 OF 8

USERNAME => s110089 DATE PLOTTED => 09-SEP-2011 TIME PLOTTED => 12:23

STRUCTURES DESIGN ADVANCE PLANNING STUDY SHEET (ENGLISH) (REV. 08-09-10)

STATE OF CALIFORNIA - DEPARTMENT OF TRANSPORTATION - DIVISION OF STRUCTURES

DIST	COUNTY	ROUTE	POST MILE
04	SF	101	2.03

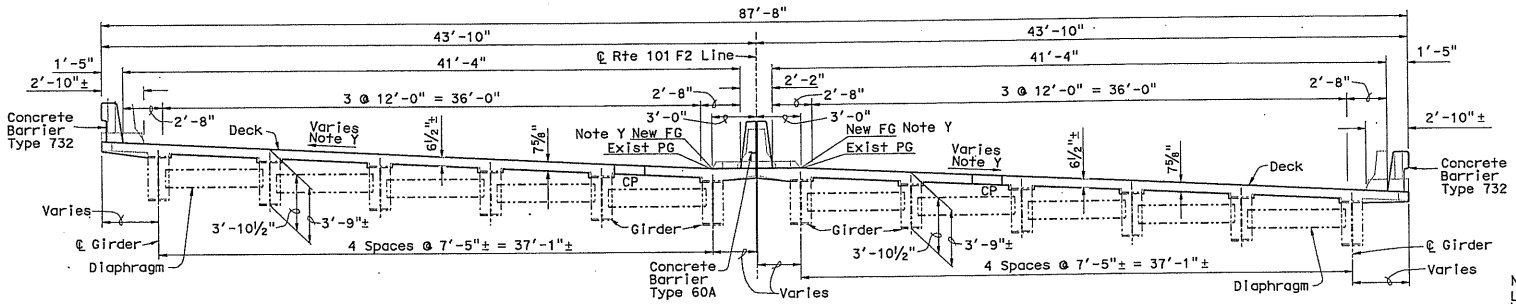

TYPICAL SECTION

1" = ⅛"

Permanent Steel Deck Forms Not Shown

Note Y
Level Deck Grades May be Maintained, or the Entire Structure Superelevation May Have to be Adjusted to Facilitate Deck Conformance at Centerline to Facilitate Traffic in Stage 3

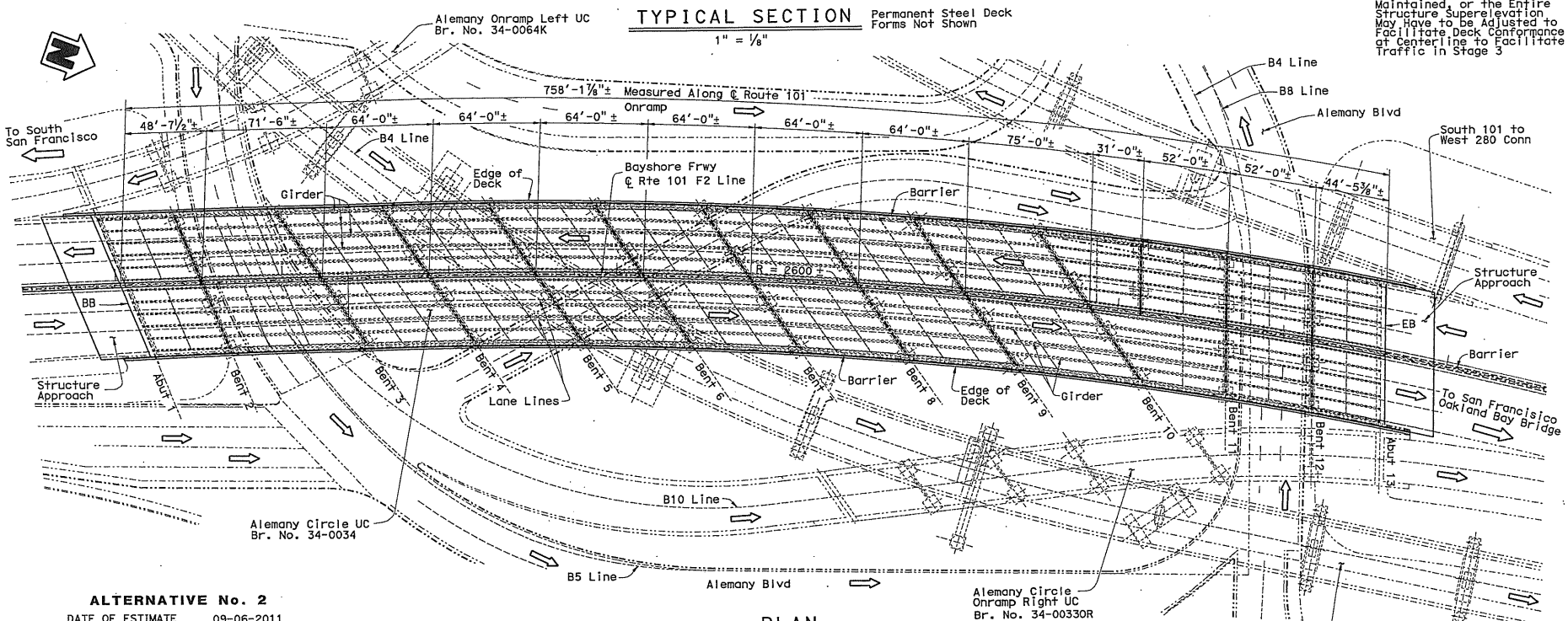

PLAN

1" = 60'

ALTERNATIVE No. 2

DATE OF ESTIMATE		09-06-2011
BRIDGE REMOVAL	=	
STRUCTURE DEPTH	=	3'-10½"
STRUCTURE LENGTH	=	758'-1⅞"±
STRUCTURE WIDTH	=	87'-10"±
AREA	=	66627 SQFT±
COST INCLUDING 10% MOBILIZATION & 40% CONTINGENCY	=	$6,889,000
COST/AREA	=	103.40 $/SQFT

For Stage Construction Details, see Sheets 2 Through 9 of 10

Bridge Elevation Not Shown

For Notes and Assumptions, see Sheet 10 of 10

Skew Varies
CP = Closure Pour
------- Denotes Existing
——— Denotes New Construction

DESIGNED BY	M. Van De Pol	DATE	8/2011
DRAWN BY	M. Van De Pol	DATE	8/2011
CHECKED BY	J. O'Brien	DATE	8/2011
APPROVED	G. Danke	DATE	8/2011

STRUCTURE DESIGN BRANCH 9

PLANNING STUDY

ALEMANY CIRCLE UNDERCROSSING

DECK REPLACEMENT

BRIDGE NO. 34-0033 | UNIT: 04

SCALE: Varies | PROJECT NUMBER & PHASE: 0412000141 K

ALTERNATIVE No. 2

USERNAME => s110089 DATE PLOTTED => 09-SEP-2011 TIME PLOTTED => 12:34

STRUCTURES DESIGN ADVANCE PLANNING STUDY SHEET (ENGLISH) (REV. 08-09-10)

FILE => 04-OEO901-alemanyapsalt201.dgn

CONTRACT NO.: 0412000141 K

SHEET 1 OF 10

STATE OF CALIFORNIA - DEPARTMENT OF TRANSPORTATION - DIVISION OF STRUCTURES

DIST	COUNTY	ROUTE	POST MILE
04	SF	101	2.03

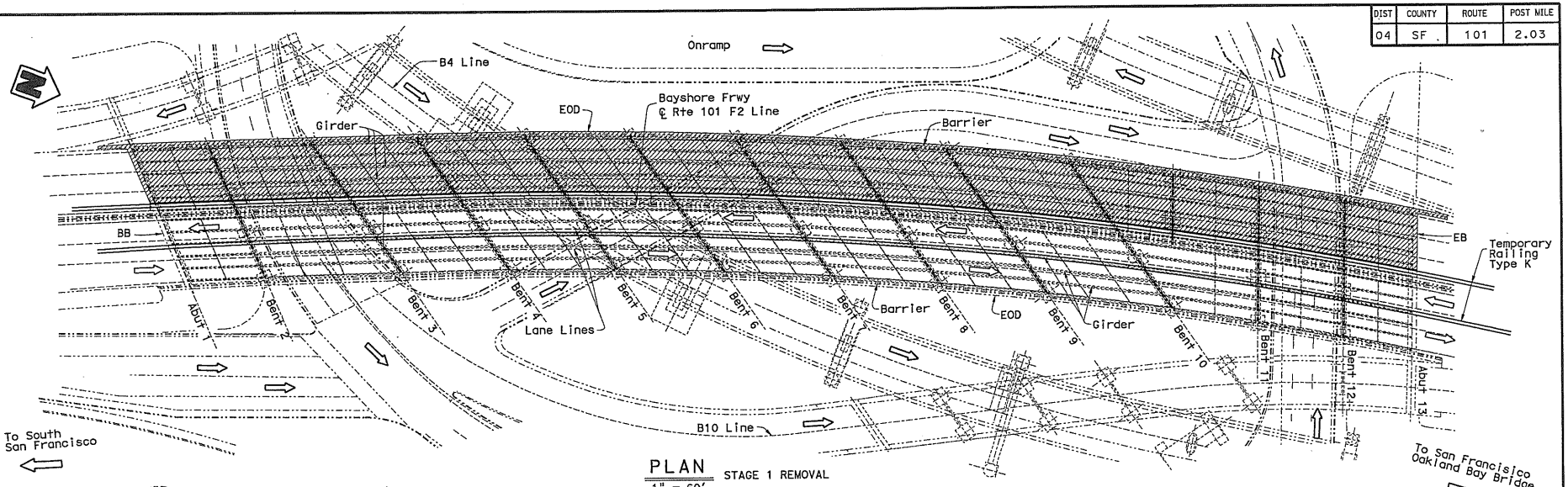

PLAN
4" = 60'
STAGE 1 REMOVAL

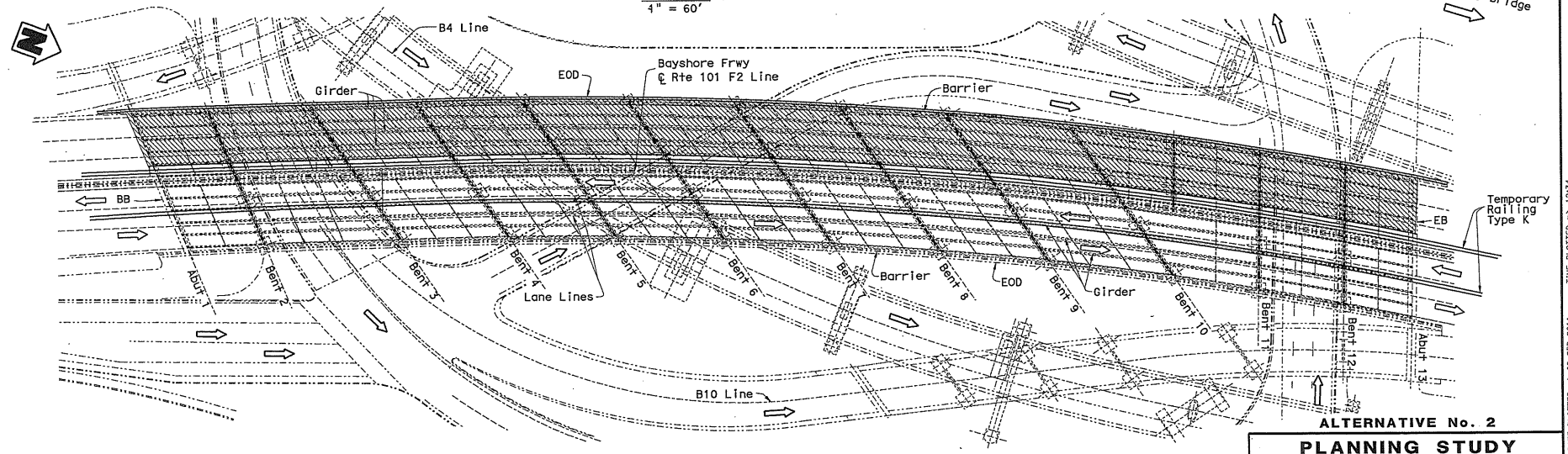

PLAN
1" = 60'
STAGE 1 CONSTRUCTION

Denotes Limits of Removal of Existing Deck

Denotes Limits of Construction of Existing Deck

Approach Slabs Not Shown

For Notes and Assumptions, see Sheet 10 of 10

For Typical Sections Associated With This Stage, see Sheet 3 of 10

Denotes Existing

Denotes New Construction

ALTERNATIVE No. 2

DESIGNED BY M. Van De Pol	DATE 8/2011	STRUCTURE DESIGN BRANCH 9	PLANNING STUDY
DRAWN BY M. Van De Pol	DATE 8/2011		ALEMANY CIRCLE UNDERCROSSING
CHECKED BY J. O'Brien	DATE 8/2011		DECK REPLACEMENT
APPROVED G. Danke	DATE 8/2011		BRIDGE NO. 34-0033 / UNIT: 04
			SCALE: Varies / PROJECT NUMBER & PHASE: 0412000141 K

USERNAME => s110089 DATE PLOTTED => 09-SEP-2011 TIME PLOTTED => 12:34

STRUCTURES DESIGN ADVANCE PLANNING STUDY SHEET (ENGLISH) (REV. 08-09-10)

FILE => 04-0E0901-alemanyapsalt202.dgn

CONTRACT NO.: 0412000141 K

SHEET 2 OF 10

STATE OF CALIFORNIA - DEPARTMENT OF TRANSPORTATION - DIVISION OF STRUCTURES

DIST	COUNTY	ROUTE	POST MILE
04	SF	101	2.03

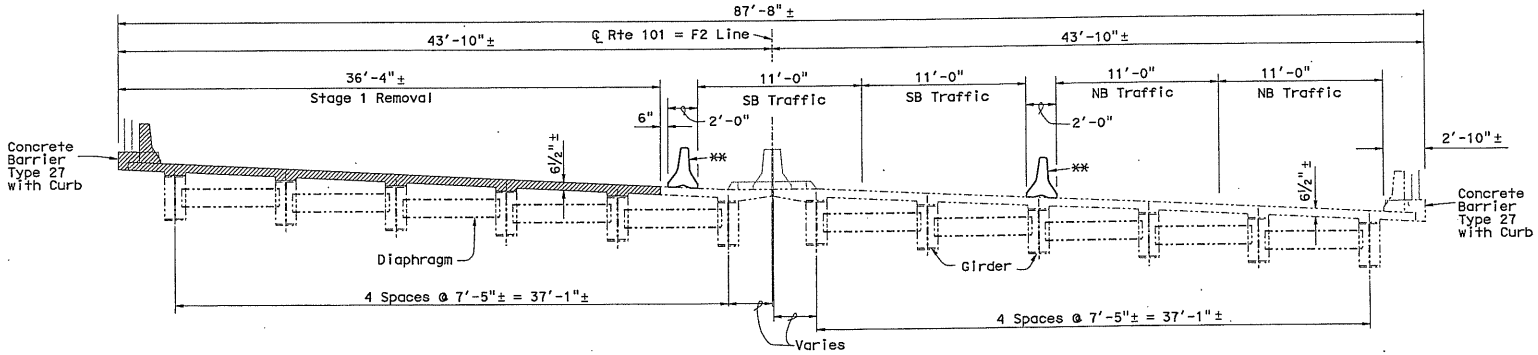

TYPICAL SECTION STAGE 1 REMOVAL

1" = ⅛"

First Stage of Work Involves Median Barrier Removal and Deck Preparation, to Facilitate Traffic Shifts in Subsequent Stages. First Stage Not Shown

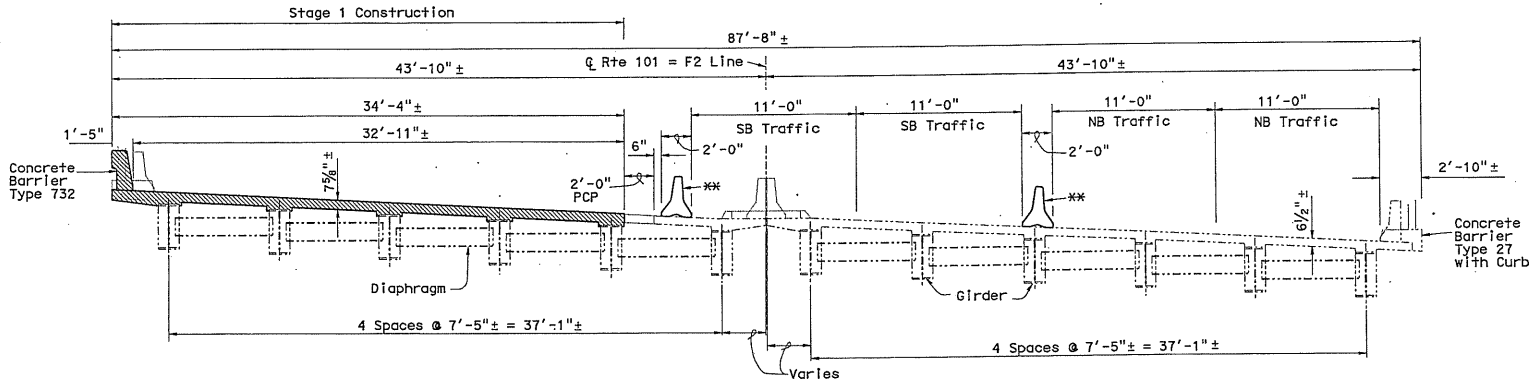

TYPICAL SECTION STAGE 1 CONSTRUCTION

1" = ⅛"

Denotes Limits of Removal of Existing Deck

Denotes Limits of Construction of Existing Deck

Permanent Steel Deck Forms Not Shown

For Notes and Assumptions, see Sheet 10 of 10

For Plans Associated With This Stage, see Sheet 2 of 10

PCP = Pending Closure Pour

** Temporary Railing Type K

-·-·-·- Denotes Existing

——— Denotes New Construction

ALTERNATIVE No. 2

PLANNING STUDY

ALEMANY CIRCLE UNDERCROSSING

DECK REPLACEMENT

DESIGNED BY M. Van De Pol	DATE 8/2011	STRUCTURE DESIGN BRANCH 9	BRIDGE NO. 34-0033 / UNIT: 04
DRAWN BY M. Van De Pol	DATE 8/2011		SCALE: Varies / PROJECT NUMBER & PHASE: 0412000141 K
CHECKED BY J. O'Brien	DATE 8/2011		
APPROVED G. Danke	DATE 8/2011		

STRUCTURES DESIGN ADVANCE PLANNING STUDY SHEET (ENGLISH) (REV. 08-09-10)

FILE => 04-0E0901-alemanyapsalt203.dgn

CONTRACT NO.: 0412000141 K

SHEET 3 OF 10

USERNAME => s110089 DATE PLOTTED => 09-SEP-2011 TIME PLOTTED => 12:34

STATE OF CALIFORNIA - DEPARTMENT OF TRANSPORTATION - DIVISION OF STRUCTURES

DIST	COUNTY	ROUTE	POST MILE
04	SF	101	2.03

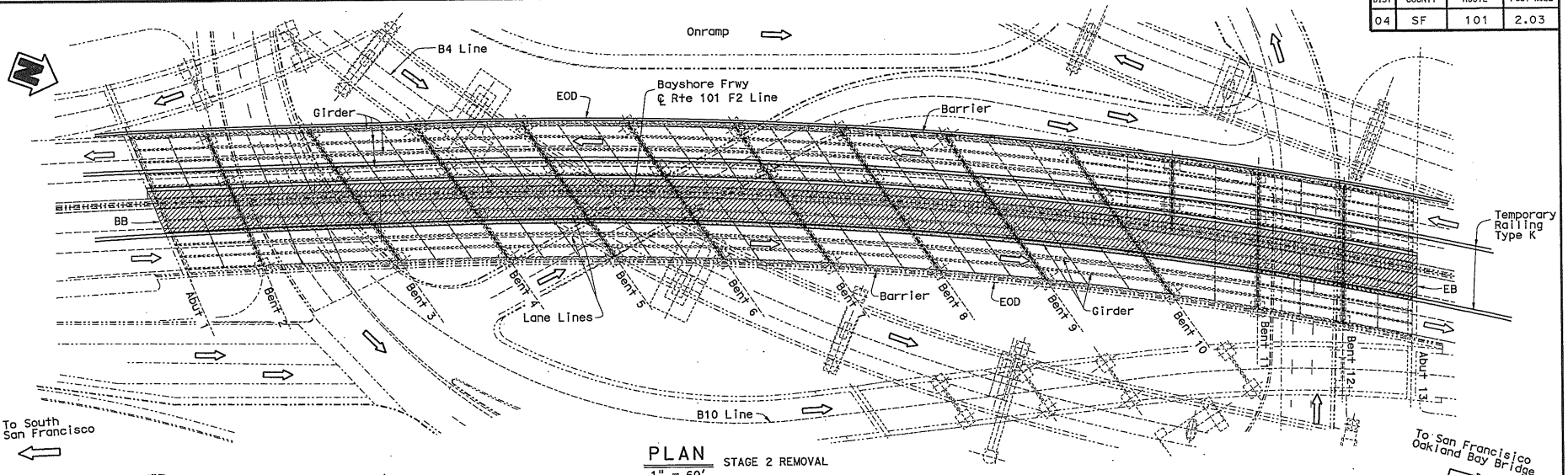

PLAN
1" = 60'
STAGE 2 REMOVAL

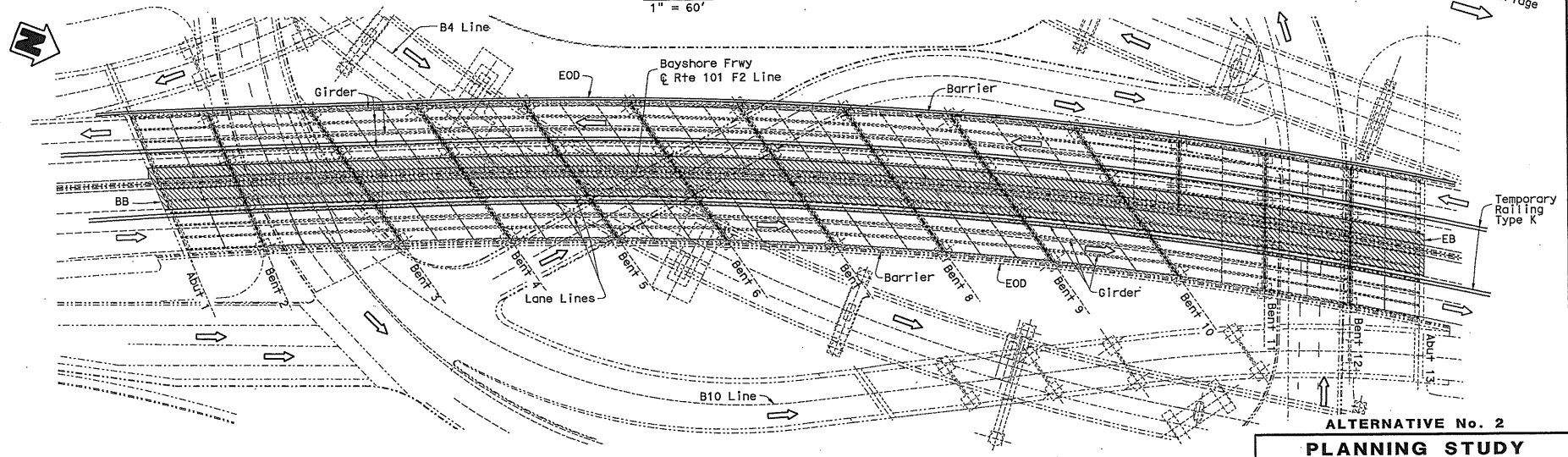

ALTERNATIVE No. 2

PLAN
1" = 60'
STAGE 2 CONSTRUCTION

Denotes Limits of Removal of Existing Deck

Denotes Limits of Construction of Existing Deck

Approach Slabs Not Shown

For Notes and Assumptions, see Sheet 10 of 10

For Typical Sections Associated With This Stage, see Sheet 5 of 10

------- Denotes Existing

——— Denotes New Construction

DESIGNED BY	M. Van De Pol	DATE	8/2011
DRAWN BY	M. Van De Pol	DATE	8/2011
CHECKED BY	J. O'Brien	DATE	8/2011
APPROVED	G. Danke	DATE	8/2011

STRUCTURE DESIGN BRANCH 9

PLANNING STUDY

ALEMANY CIRCLE UNDERCROSSING

DECK REPLACEMENT

BRIDGE NO. 34-0033	UNIT: 04
SCALE: Varies	PROJECT NUMBER & PHASE: 0412000141 K

CONTRACT NO.: 0412000141 K

SHEET 4 OF 10

FILE => 04-0E0901-alemanyapsalt204.dgn

STRUCTURES DESIGN ADVANCE PLANNING STUDY SHEET (ENGLISH) (REV. 08-09-10)

USERNAME => s110089 DATE PLOTTED => 09-SEP-2011 TIME PLOTTED => 12:34

STATE OF CALIFORNIA - DEPARTMENT OF TRANSPORTATION - DIVISION OF STRUCTURES

DIST	COUNTY	ROUTE	POST MILE
04	SF	101	2.03

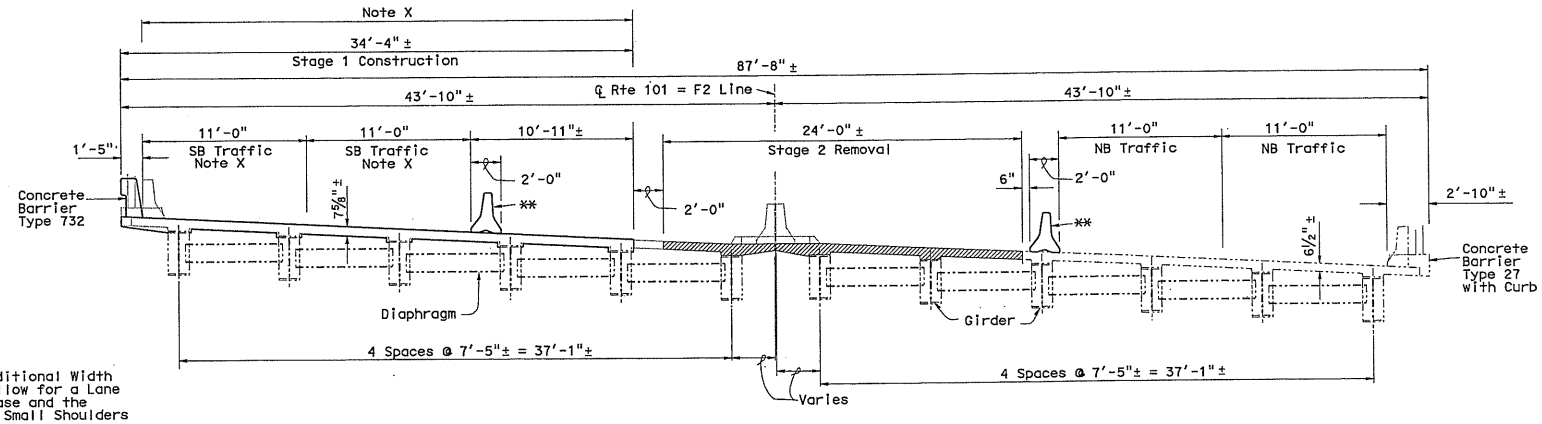

TYPICAL SECTION STAGE 2 REMOVAL

1" = ⅛"

Note X
Adequate Additional Width Exists to Allow for a Lane Width Increase and the Addition of Small Shoulders

Note Y
Level Deck Grades May be Maintained, or the Entire Structure Superelevation May Have to be Adjusted to Facilitate Deck Conformance at Centerline to Facilitate Traffic in Stage 3

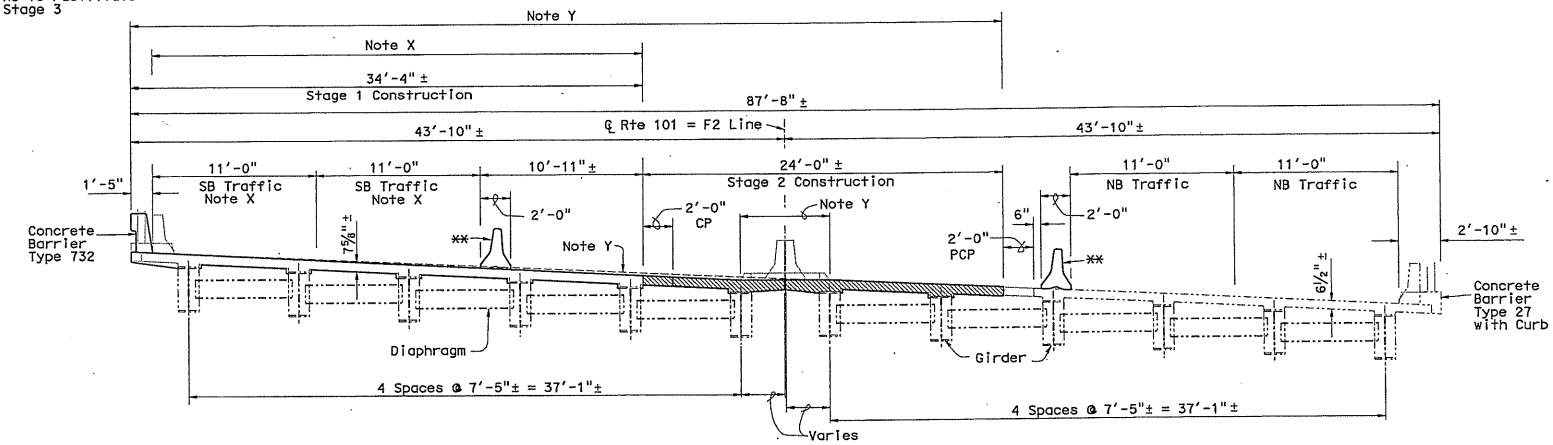

TYPICAL SECTION STAGE 2 CONSTRUCTION

1" = ⅛"

Denotes Limits of Removal of Existing Deck

Denotes Limits of Construction of Existing Deck

Permanent Steel Deck Forms Not Shown

For Notes and Assumptions, see Sheet 10 of 10

For Plans Associated With This Stage, see Sheet 4 of 10

CP = Closure Pour
PCP = Pending Closure Pour
** Temporary Railing Type K
-------- Denotes Existing
——— Denotes New Construction

DESIGNED BY	M. Van De Pol	DATE	8/2011
DRAWN BY	M. Van De Pol	DATE	8/2011
CHECKED BY	J. O'Brien	DATE	8/2011
APPROVED	G. Danke	DATE	8/2011

STRUCTURE DESIGN BRANCH 9

ALTERNATIVE No. 2

PLANNING STUDY

ALEMANY CIRCLE UNDERCROSSING

DECK REPLACEMENT

BRIDGE NO. 34-0033	UNIT: 04
SCALE: Varies	PROJECT NUMBER & PHASE: 0412000141 K

CONTRACT NO.: 0412000141 K

SHEET 5 OF 10

USERNAME => s110089 DATE PLOTTED => 09-SEP-2011 TIME PLOTTED => 12:34

FILE => 04-0E0901-alemanyapsalt205.dgn

STRUCTURES DESIGN ADVANCE PLANNING STUDY SHEET (ENGLISH) (REV. 08-09-10)

STATE OF CALIFORNIA - DEPARTMENT OF TRANSPORTATION - DIVISION OF STRUCTURES

DIST	COUNTY	ROUTE	POST MILE
04	SF	101	2.03

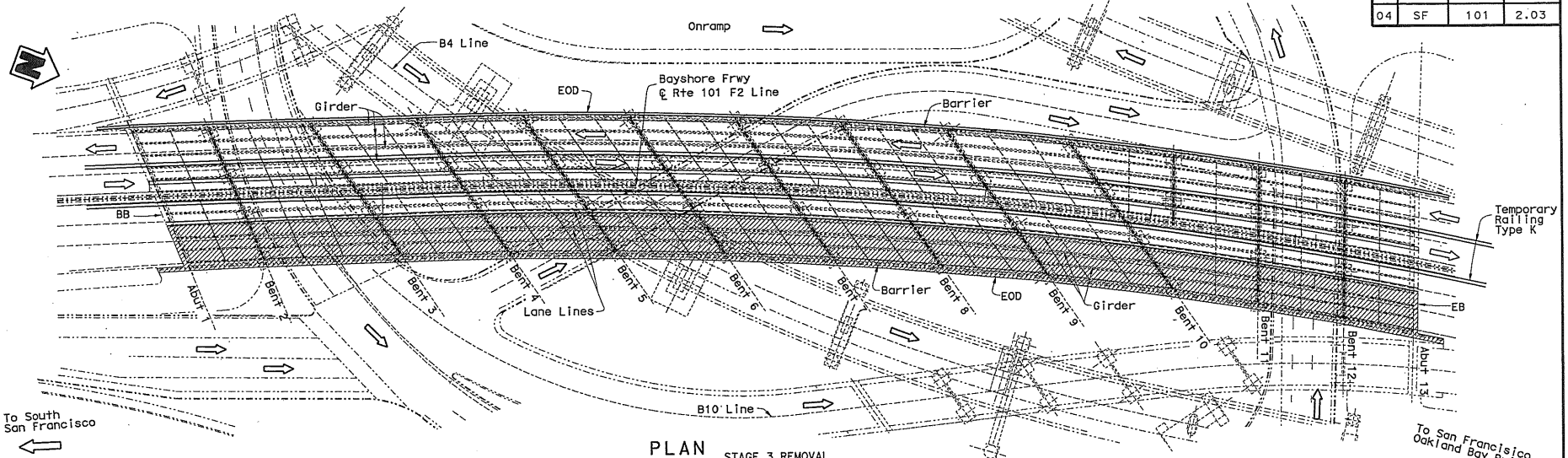

PLAN
1" = 60'
STAGE 3 REMOVAL

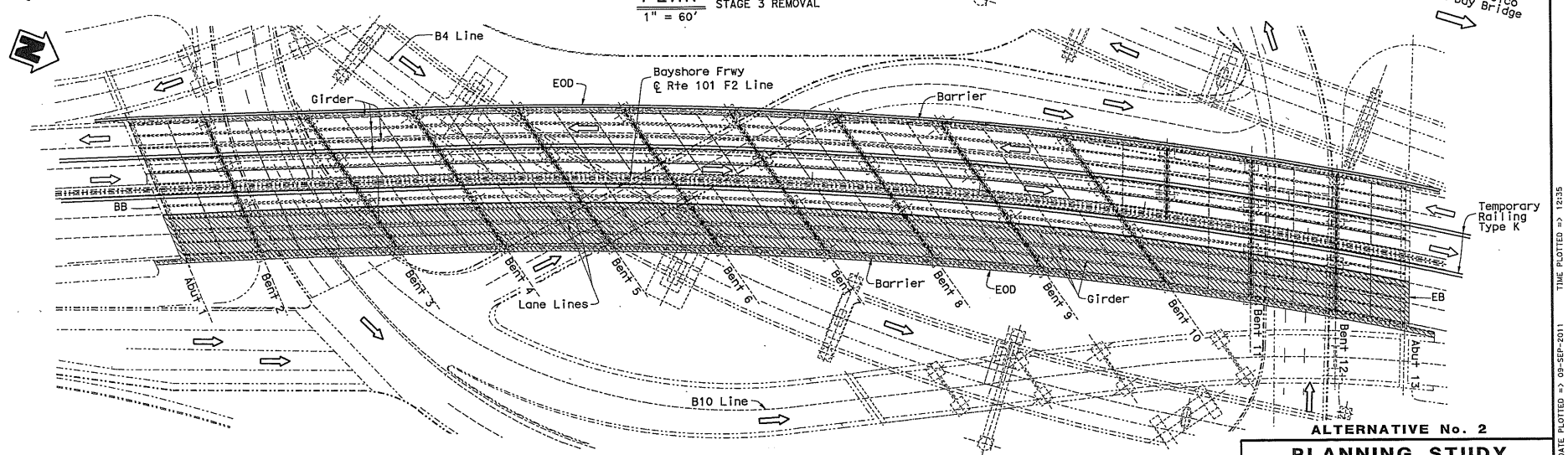

ALTERNATIVE No. 2

PLAN
1" = 60'
STAGE 3 CONSTRUCTION

Denotes Limits of Removal of Existing Deck

Denotes Limits of Construction of Existing Deck

Approach Slabs Not Shown

For Notes and Assumptions, see Sheet 10 of 10

For Typical Sections Associated With This Stage, see Sheet 7 of 10

-------- Denotes Existing

——— Denotes New Construction

DESIGNED BY M. Van De Pol	DATE 8/2011	STRUCTURE DESIGN BRANCH 9	PLANNING STUDY
DRAWN BY M. Van De Pol	DATE 8/2011		ALEMANY CIRCLE UNDERCROSSING
CHECKED BY J. O'Brien	DATE 8/2011		DECK REPLACEMENT
APPROVED G. Danke	DATE 8/2011		BRIDGE NO. 34-0033 / UNIT: 04
			SCALE: Varies / PROJECT NUMBER & PHASE: 0412000141 K

USERNAME => s110089 DATE PLOTTED => 09-SEP-2011 TIME PLOTTED => 12:35

STRUCTURES DESIGN ADVANCE PLANNING STUDY SHEET (ENGLISH) (REV. 08-09-10)

FILE => 04-DE0901-alemanyapsalt206.dgn

CONTRACT NO.: 0412000141 K

SHEET 6 OF 10

STATE OF CALIFORNIA - DEPARTMENT OF TRANSPORTATION - DIVISION OF STRUCTURES

DIST	COUNTY	ROUTE	POST MILE
04	SF	101	2.03

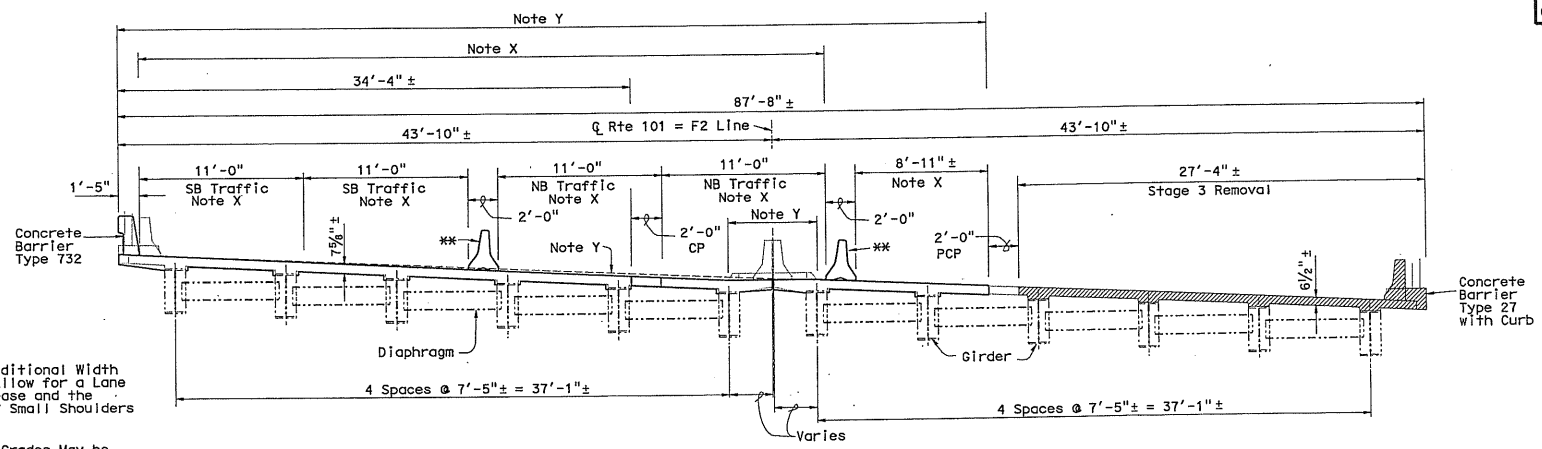

Note X
Adequate Additional Width Exists to Allow for a Lane Width Increase and the Addition of Small Shoulders

Note Y
Level Deck Grades May be Maintained, or the Entire Structure Superelevation May Have to be Adjusted to Facilitate Deck Conformance at Centerline to Facilitate Traffic in Stage 3

TYPICAL SECTION STAGE 3 REMOVAL

1" = ⅛"

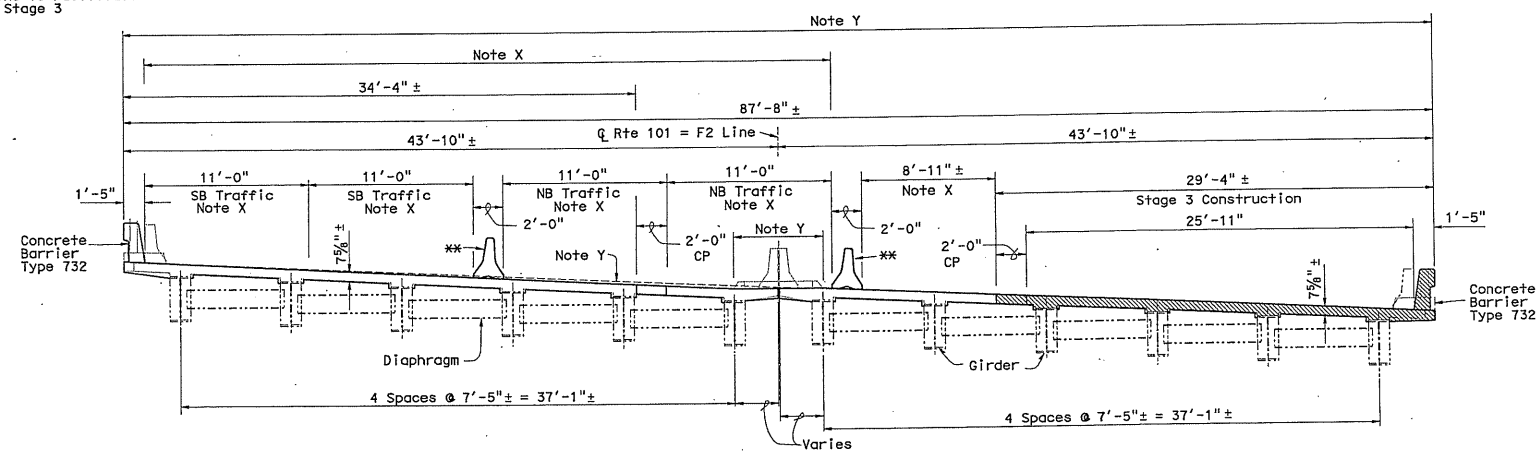

TYPICAL SECTION STAGE 3 CONSTRUCTION

1" = ⅛"

Denotes Limits of Removal of Existing Deck

Denotes Limits of Construction of Existing Deck

Permanent Steel Deck Forms Not Shown

For Notes and Assumptions, see Sheet 10 of 10

For Plans Associated With This Stage, see Sheet 6 of 10

CP = Closure Pour
PCP = Pending Closure Pour
** Temporary Railing Type K
Denotes Existing
Denotes New Construction

ALTERNATIVE No. 2

DESIGNED BY M. Van De Pol	DATE 8/2011	STRUCTURE DESIGN BRANCH 9	PLANNING STUDY
DRAWN BY M. Van De Pol	DATE 8/2011		ALEMANY CIRCLE UNDERCROSSING
CHECKED BY J. O'Brien	DATE 8/2011		DECK REPLACEMENT
APPROVED G. Danke	DATE 8/2011		BRIDGE NO. 34-0033 / UNIT: 04
			SCALE: Varies / PROJECT NUMBER & PHASE: 0412000141 K

FILE => 04-0E0901-alemanyapsalt207.dgn

CONTRACT NO.: 0412000141 K

SHEET 7 OF 10

USERNAME => s110089 DATE PLOTTED => 09-SEP-2011 TIME PLOTTED => 12:35

STRUCTURES DESIGN ADVANCE PLANNING STUDY SHEET (ENGLISH) (REV. 08-09-10)

STATE OF CALIFORNIA - DEPARTMENT OF TRANSPORTATION - DIVISION OF STRUCTURES

DIST	COUNTY	ROUTE	POST MILE
04	SF	101	2.03

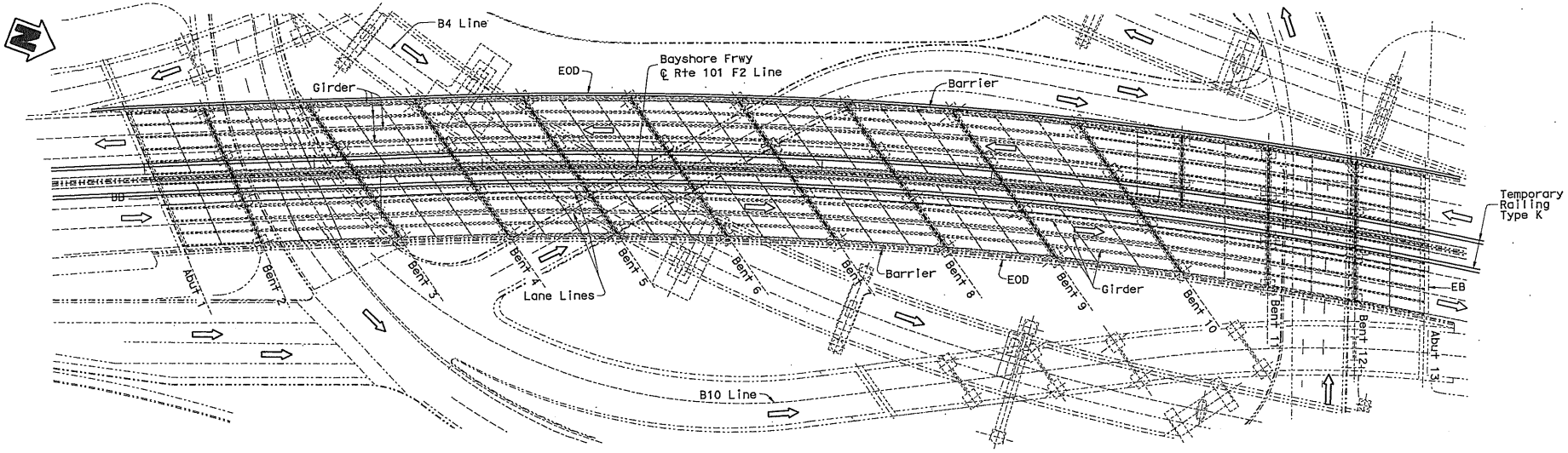

PLAN
1" = 60'
STAGE 4 CONSTRUCTION

Denotes Limits of Removal of Existing Deck

Denotes Limits of Construction of Existing Deck

Approach Slabs Not Shown

For Notes and Assumptions, see Sheet 10 of 10

For Typical Sections Associated With This Stage, see Sheet 9 of 10

-------- Denotes Existing

——— Denotes New Construction

DESIGNED BY	M. Van De Pol	DATE	8/2011
DRAWN BY	M. Van De Pol	DATE	8/2011
CHECKED BY	J. O'Brien	DATE	8/2011
APPROVED	G. Danke	DATE	8/2011

STRUCTURE DESIGN BRANCH 9

ALTERNATIVE No. 2

PLANNING STUDY

ALEMANY CIRCLE UNDERCROSSING

DECK REPLACEMENT

BRIDGE NO. 34-0033	UNIT: 04
SCALE: Varies	PROJECT NUMBER & PHASE: 0412000141 K

FILE => 04-0E0901-alemanyapsalt208.dgn

CONTRACT NO.: 0412000141 K

SHEET 8 OF 10

USERNAME => s110089 DATE PLOTTED => 09-SEP-2011 TIME PLOTTED => 12:35

STRUCTURES DESIGN ADVANCE PLANNING STUDY SHEET (ENGLISH) (REV. 08-09-10)

STATE OF CALIFORNIA - DEPARTMENT OF TRANSPORTATION - DIVISION OF STRUCTURES

DIST	COUNTY	ROUTE	POST MILE
04	SF	101	2.03

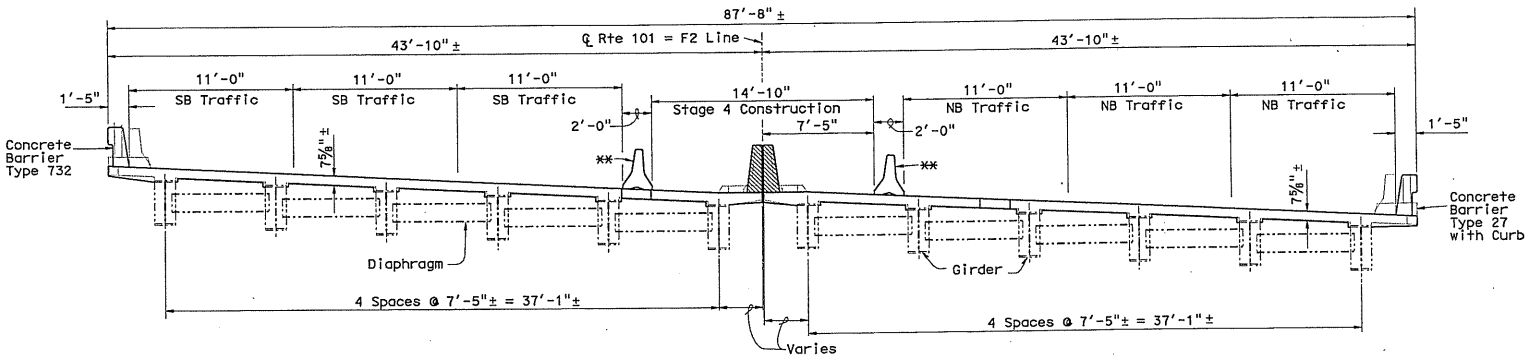

TYPICAL SECTION

STAGE 4 CONSTRUCTION

1" = ⅛"

Denotes Limits of Construction of Existing Deck

Permanent Steel Deck Forms Not Shown

For Notes and Assumptions, see Sheet 10 of 10

For Plans Associated With This Stage, see Sheet 8 of 10

** Temporary Railing Type K

-·-·-·- Denotes Existing

——— Denotes New Construction

DESIGNED BY	M. Van De Pol	DATE	8/2011
DRAWN BY	M. Van De Pol	DATE	8/2011
CHECKED BY	J. O'Brien	DATE	8/2011
APPROVED	G. Danke	DATE	8/2011

STRUCTURE DESIGN BRANCH 9

ALTERNATIVE No. 2

PLANNING STUDY

ALEMANY CIRCLE UNDERCROSSING

DECK REPLACEMENT

BRIDGE NO. 34-0033 | UNIT: 04

SCALE: Varies | PROJECT NUMBER & PHASE: 0412000141 K

USERNAME => s110089 DATE PLOTTED => 09-SEP-2011 TIME PLOTTED => 12:35

STRUCTURES DESIGN ADVANCE PLANNING STUDY SHEET (ENGLISH) (REV. 08-09-10)

FILE => 04-OEO901-alemanyapsalt209.dgn

CONTRACT NO.: 0412000141 K

SHEET 9 OF 10

STATE OF CALIFORNIA - DEPARTMENT OF TRANSPORTATION - DIVISION OF STRUCTURES

DIST	COUNTY	ROUTE	POST MILE
04	SF	101	2.03

NOTES AND ASSUMPTIONS

1. Traffic will pass under and over the structure during construction
2. Traffic will pass on the structure during construction
3. Lane closures and width reductions will be required for construction
4. Minimum of four stages of construction will be required
5. Falsework will not be required for construction
6. Temporary K-Rail will be required for traffic handling
7. No substructure work will be performed as part of this study
8. Shoring will not be required for construction
9. Temporary Night closure will be required for removal and construction
10. Contaminated/hazardous materials is anticipated
11. Epoxy coated reinforcement will be required
12. Construction access difficulties are anticipated at deck level
13. Utilities assumed to be in present with construction operations
14. Vertical clearance is not considered to be an issue
15. Seasonal and daily construction time restrictions anticipated
16. R/W issues are not anticipated
17. Night work along with temporary lane closures will be needed.
18. Construction equipment size and placement could be issues of concern
19. Construction equipment and materials storage space not an issue
20. No subsurface investigations will be required for design
21. Structure drainage system incorporated into study
22. Accelerated construction schedule anticipated
23. Architectural treatment not anticipated
24. Noise restrictions not anticipated
25. No Liquefaction potential considered in design
26. Detour will not be required for construction
27. Temporary supports will not be required for construction
28. Shoring will not be required for staged removal
29. Multiple K-Rail configurations/shifts will be required for construction
30. Staged structure removal difficulties anticipated
31. Protective covers required for structure removal
32. Profile grade modifications will occur due to deck thickness change
33. Superelevation modifications may be required
34. Assume two lanes of traffic each way during construction
35. Structure Approach Slabs incorporated into study
36. Small cranes to be employed for deck lifting
37. Slope Paving not incorporated into the study
38. No slope benching anticipated
39. Excavation anticipated for structure approach slab work only
40. Joint seal replacement incorporated in the study
41. Approach work up to structure approach slabs by District
42. Median barrier work limits defined by ends of structure approach slabs
43. Edge of deck barrier work limits defined by end of wingwalls
44. Median barrier work limits defined by ends of structure approach slabs
45. Survey of structure girder elevations incorporated into study
46. Protection system for deck removal included in study
47. Spot blast and clean girders included in study
48. Clean and paint structural steel included in study
49. Earthquake retofit work considered unnecessary for this study
50. Consider all structure work performed from deck level
51. No dropping of concrete to surfaces below allowed
52. Special deck removal operations considered. See sequence
53. Prefabricated deck rebar cage use anticipated
54. No new chain link railing anticipated on structure
55. No special high strength concrete anticipated for use
56. Stud connectors to be employed to make the deck composite
57. Epoxy coated rebar employed for all applications
58. Equipment access difficulties anticipated at deck level
59. Drill and bond dowels to be employed at abutments
60. Paving notch extensions incorporated for structure approaches
61. Existing lead paint anticipated, with associated containment system
62. Existing utility temporary support system required
63. Conduits incorporated into new barriers at edge of decks
64. Drainage system work incorporated into study

GENERAL COMMENT

Deck replacement for this structure will be a complicated undertaking. Multiple constraints imposed, place limits on the design and construction operations to be employed. A large number of deck replacement alternatives were evaluated as part of this study. The removal and construction design and details shown herein, represent one selected alternative. Additional traffic handling studies are required to address remaining concerns.

APPROXIMATE CONSTRUCTION SEQUENCE

Longitudinal Progression of Work Along Length of Structure
Typical Per Stage Shown

1. Remove barrier
2. Saw cut existing deck total depth into segments
3. Core holes in existing deck for segment lifting
4. Lift deck segments off girders
5. Chip retained deck concrete from girder flanges
6. Remove abutment portions and approach sections
7. Spot blast and clean girders
8. Place permanent steel deck forms
9. Place stud connectors on girders
10. Place deck and abutment reinforcement
11. Cast deck and abutment concrete and cure
12. Place barrier reinforcement
13. Cast barrier concrete and cure
14. Grade for structure approaches
15. Place structure approach reinforcement
16. Cast structure approach concrete and cure
17. Place joint seals
18. Clean and paint structural steel

ESTIMATING NOTES AND ASSUMPTIONS

1. Four stage approach with long-term closures
2. Non-split traffic lanes employed.
3. Alternative 3 used as a base case for unit prices
4. Alternative 3 unit prices increased by 20%
5. Unit prices derived from 04-1A3201 BEES- similar project
6. Temporary Railing Type K not included in estimate
7. Roadway approach work not included in estimate
8. Barrier transitions not included in estimate
9. No bridge mounted utility work included in estimate
10. No bridge mounted light standards included in estimate
11. Lightweight concrete not considered for employment
12. Epoxy reinforcement employed in deck and barriers
13. Protection system employed- unit price based deck area
14. Girder survey - unit price based off concrete price

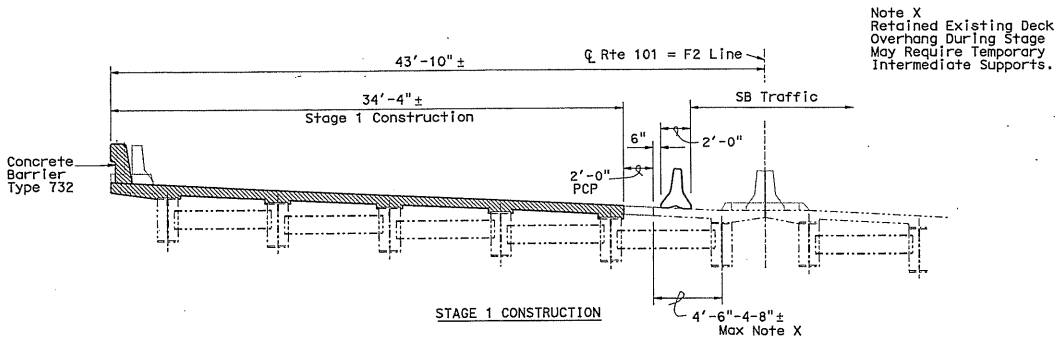

PART TYPICAL SECTIONS

1" = 1/8"

Temporary Deck
Overhang Dimensions
Deck Forms Not Shown

-------- Denotes Existing
——— Denotes New Construction

ALTERNATIVE No. 2

PLANNING STUDY

ALEMANY CIRCLE UNDERCROSSING

DECK REPLACEMENT

DESIGNED BY M. Van De Pol	DATE 8/2011	STRUCTURE DESIGN BRANCH 9	BRIDGE NO. 34-0033 / UNIT: 04
DRAWN BY M. Van De Pol	DATE 8/2011		
CHECKED BY J. O'Brien	DATE 8/2011		SCALE: Varies / PROJECT NUMBER & PHASE: 0412000141 K
APPROVED G. Danke	DATE 8/2011		

USERNAME => s110089 DATE PLOTTED => 09-SEP-2011 TIME PLOTTED => 12:35

STATE OF CALIFORNIA - DEPARTMENT OF TRANSPORTATION - DIVISION OF STRUCTURES

DIST	COUNTY	ROUTE	POST MILE
04	SF	101	2.03

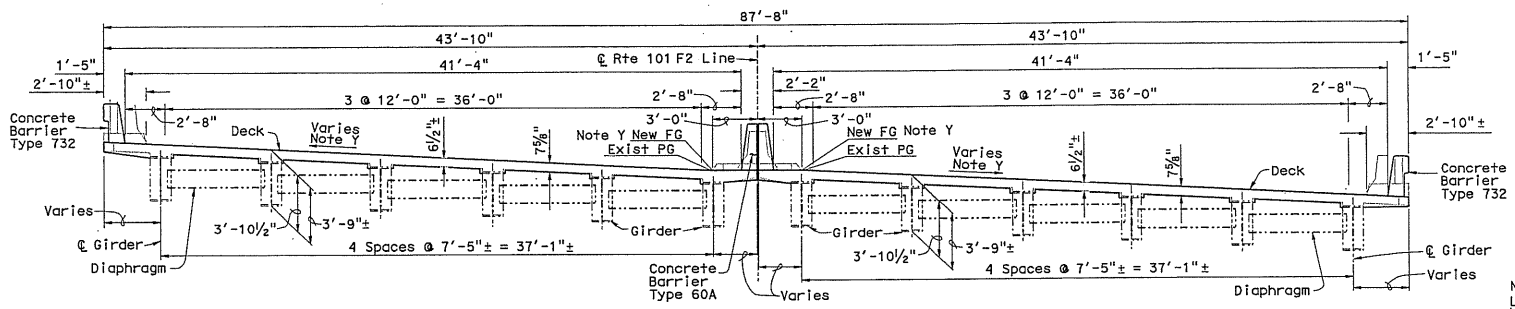

TYPICAL SECTION

1" = ⅛"

Permanent Steel Deck Forms Not Shown

Note Y
Level Deck Grades May be Maintained, or the Entire Structure Superelevation May Have to be Adjusted to Facilitate Deck Conformance at Centerline to Facilitate Traffic in Stage 3

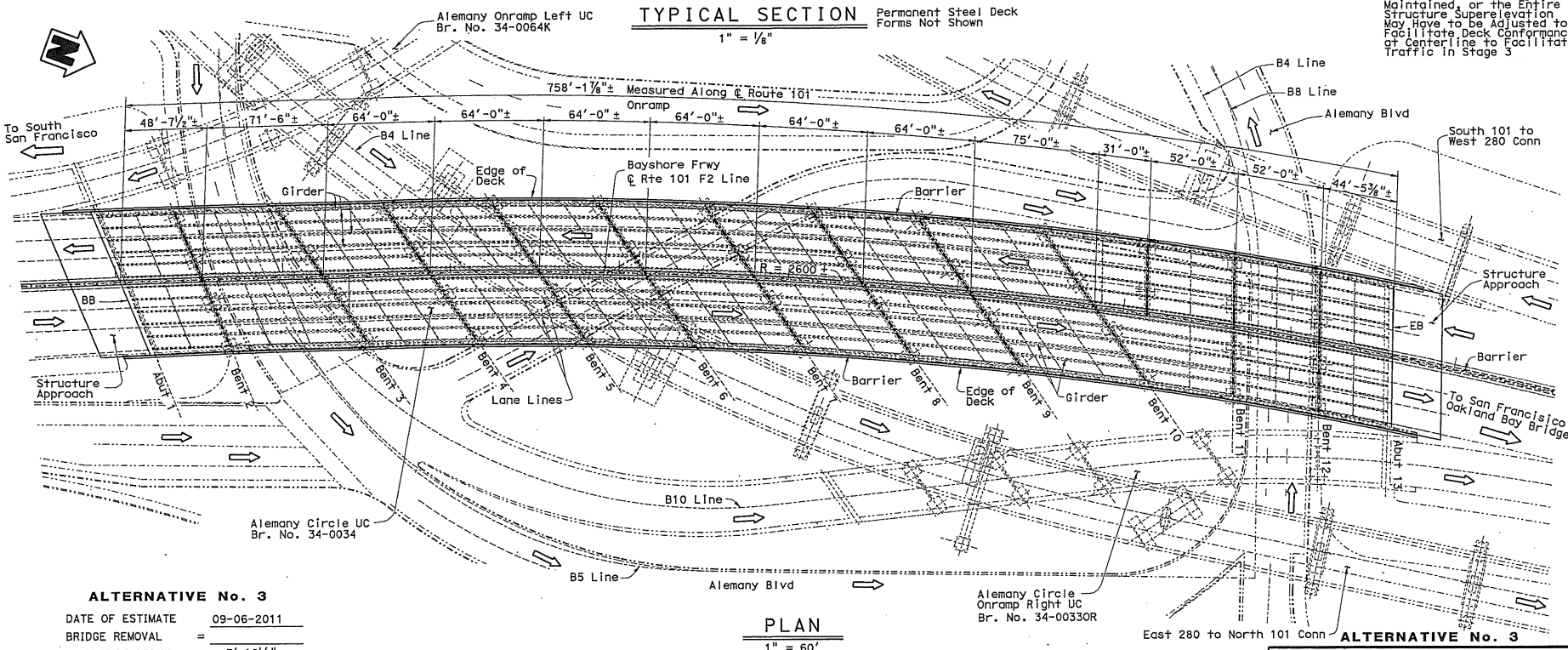

PLAN

1" = 60'

ALTERNATIVE No. 3

DATE OF ESTIMATE		09-06-2011
BRIDGE REMOVAL	=	
STRUCTURE DEPTH	=	3'-10½"
STRUCTURE LENGTH	=	758'-1⅞"±
STRUCTURE WIDTH	=	87'-10"±
AREA	=	66627 SQFT±
COST INCLUDING 10% MOBILIZATION & 40% CONTINGENCY	=	$5,495,000
COST/AREA	=	82.47 $/SQFT

For Stage Construction Details, see Sheets 2 Through 3 of 4

Bridge Elevation Not Shown

For Notes and Assumptions, see Sheet 4 of 4

Skew Varies

-·-·-·- Denotes Existing

——— Denotes New Construction

DESIGNED BY	M. Van De Pol	DATE	8/2011
DRAWN BY	M. Van De Pol	DATE	8/2011
CHECKED BY	J. O'Brien	DATE	8/2011
APPROVED	G. Danke	DATE	8/2011

STRUCTURE DESIGN BRANCH 9

PLANNING STUDY

ALEMANY CIRCLE UNDERCROSSING

DECK REPLACEMENT

BRIDGE NO. 34-0033	UNIT: 04
SCALE: Varies	PROJECT NUMBER & PHASE: 0412000141 K

ALTERNATIVE No. 3

USERNAME => s110089 DATE PLOTTED => 09-SEP-2011 TIME PLOTTED => 12:27

STRUCTURES DESIGN ADVANCE PLANNING STUDY SHEET (ENGLISH) (REV. 08-09-10)

FILE => 04-0E0901-alemanyapsalt301.dgn

CONTRACT NO.: 0412000141 K

SHEET 1 OF 4

STATE OF CALIFORNIA - DEPARTMENT OF TRANSPORTATION - DIVISION OF STRUCTURES

DIST	COUNTY	ROUTE	POST MILE
04	SF	101	2.03

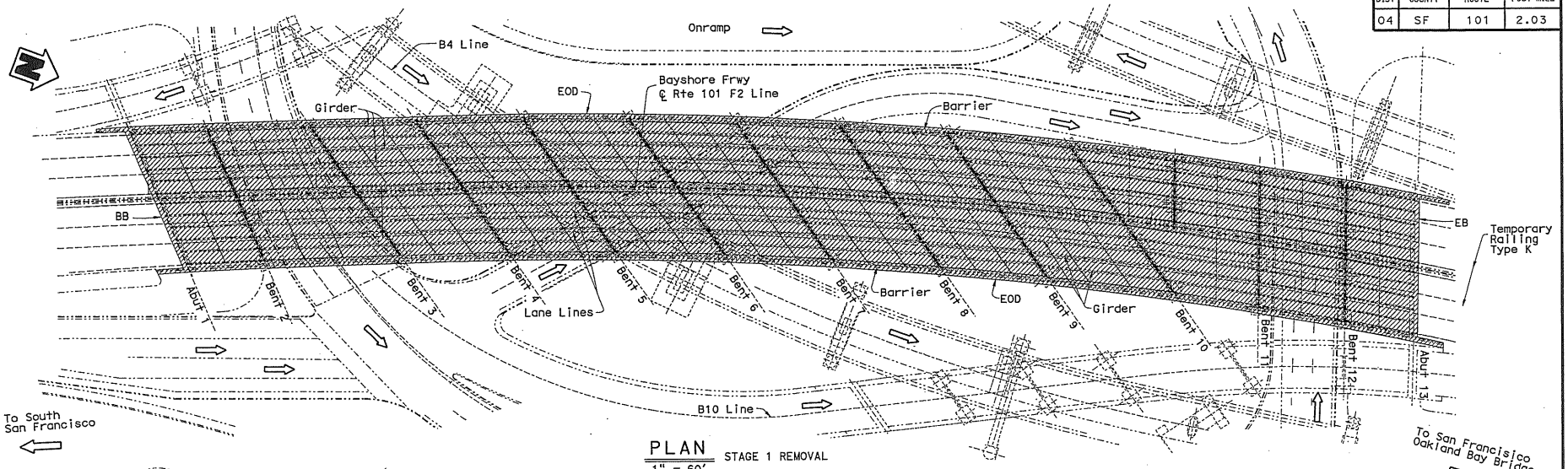

PLAN
1" = 60'
STAGE 1 REMOVAL

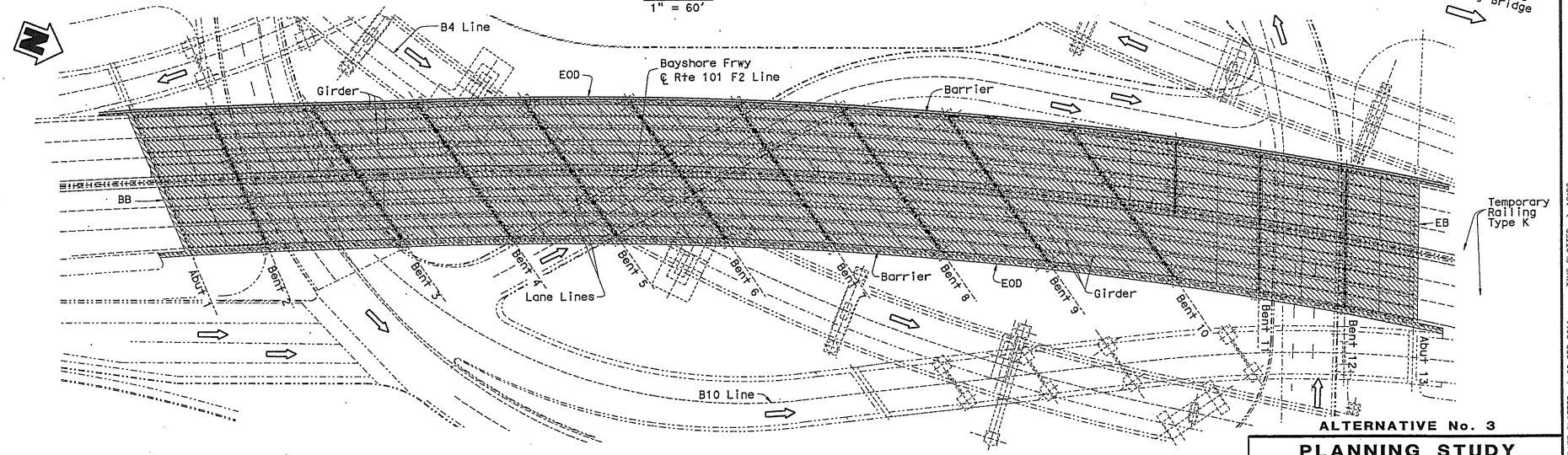

ALTERNATIVE No. 3

PLAN
1" = 60'
STAGE 1 CONSTRUCTION

Denotes Limits of Removal of Existing Deck

Denotes Limits of Construction of Existing Deck

Approach Slabs Not Shown

For Notes and Assumptions, see Sheet 4 of 4

For Typical Sections Associated With This Stage, see Sheet 3 of 4

-·-·-·- Denotes Existing

——— Denotes New Construction

DESIGNED BY	M. Van De Pol	DATE	8/2011
DRAWN BY	M. Van De Pol	DATE	8/2011
CHECKED BY	J. O'Brien	DATE	8/2011
APPROVED	G. Danke	DATE	8/2011

STRUCTURE DESIGN BRANCH 9

PLANNING STUDY

ALEMANY CIRCLE UNDERCROSSING

DECK REPLACEMENT

BRIDGE NO. 34-0033 | UNIT: 04

SCALE: Varies | PROJECT NUMBER & PHASE: 0412000141 K

USERNAME => s110089 DATE PLOTTED => 09-SEP-2011 TIME PLOTTED => 12:28

STATE OF CALIFORNIA - DEPARTMENT OF TRANSPORTATION - DIVISION OF STRUCTURES

DIST	COUNTY	ROUTE	POST MILE
04	SF	101	2.03

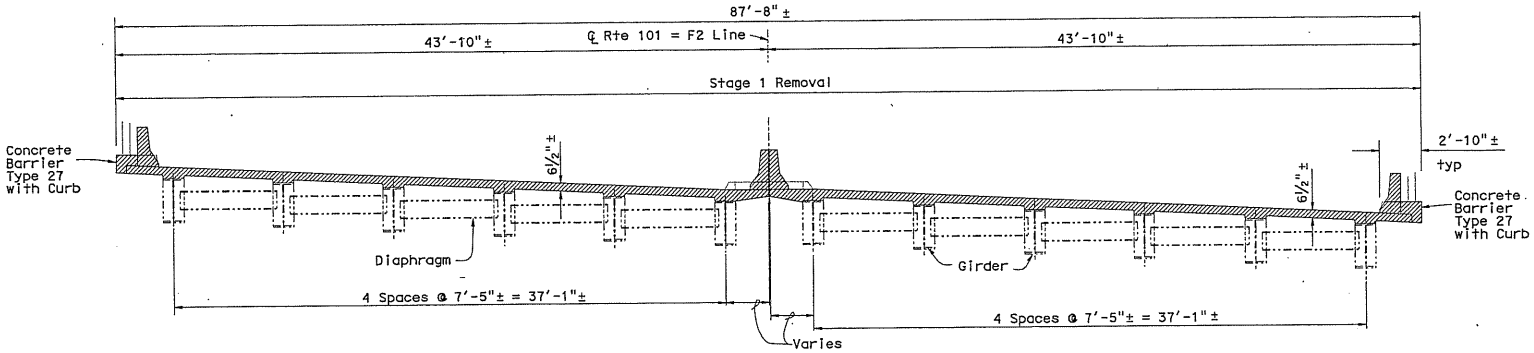

TYPICAL SECTION STAGE 1 REMOVAL

1" = ⅛"

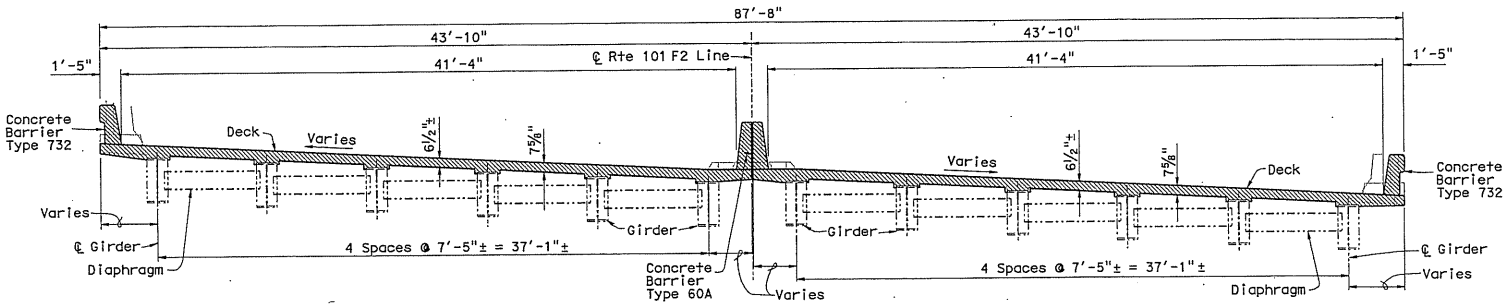

TYPICAL SECTION STAGE 1 CONSTRUCTION

1" = ⅛"

Denotes Limits of Removal of Existing Deck

Denotes Limits of Construction of Existing Deck

Permanent Steel Deck Forms Not Shown

For Notes and Assumptions, see Sheet 4 of 4

For Plans Associated With This Stage, see Sheet 2 of 4

Denotes Existing

Denotes New Construction

ALTERNATIVE No. 3

PLANNING STUDY

ALEMANY CIRCLE UNDERCROSSING

DECK REPLACEMENT

DESIGNED BY	M. Van De Pol	DATE	8/2011
DRAWN BY	M. Van De Pol	DATE	8/2011
CHECKED BY	J. O'Brien	DATE	8/2011
APPROVED	G. Danke	DATE	8/2011

STRUCTURE DESIGN BRANCH 9

BRIDGE NO. 34-0033 | UNIT: 04

SCALE: Varies | PROJECT NUMBER & PHASE: 0412000141 K

USERNAME => s110089 DATE PLOTTED => 09-SEP-2011 TIME PLOTTED => 12:28

FILE => 04-0E0901-alemanyapsalt303.dgn

CONTRACT NO.: 0412000141 K

SHEET 3 OF 4

STRUCTURES DESIGN ADVANCE PLANNING STUDY SHEET (ENGLISH) (REV. 08-09-10)

DIST	COUNTY	ROUTE	POST MILE
04	SF	101	2.03

NOTES AND ASSUMPTIONS

1. Traffic will pass under and over the structure during construction
2. Traffic will not pass on the structure during construction
3. Route 101 Traffic will be Detoured During Removal and Construction
4. One stage of construction will be required
5. Falsework will not be required for construction
6. Temporary K-Rail will not be required for traffic handling
7. No substructure work will be performed as part of this study
8. Shoring will not be required for construction
7. Contaminated/hazardous materials is anticipated
8. Epoxy coated reinforcement will be required
9. Utilities assumed to be in present with construction operations
10. Vertical clearance is not considered to be an issue
11. R/W issues are not anticipated
12. No subsurface investigations will be required for design
13. Structure drainage system incorporated into study
14. Architectural treatment not anticipated
15. Noise restrictions not anticipated
16. No Liquefaction potential considered in design
17. Temporary supports will not be required for construction
18. Shoring will not be required for staged removal
19. Protective covers required for structure removal
20. Profile grade modifications will occur due to deck thickness change
21. Superelevation modifications may be required
22. Structure Approach Slabs incorporated into study
23. Small cranes to be employed for deck lifting
24. Slope Paving not incorporated into the study
25. No slope benching anticipated
26. Excavation anticipated for structure approach slab work only
27. Joint seal replacement incorporated in the study
28. Approach work up to structure approach slabs by District
29. Median barrier work limits defined by ends of structure approach slabs
30. Edge of deck barrier work limits defined by end of wingwalls
31. Median barrier work limits defined by ends of structure approach slabs
32. Survey of structure girder elevations incorporated into study
33. Protection system for deck removal included in study
34. Spot blast and clean girders included in study
35. Clean and paint structural steel included in study
36. Earthquake retofit work considered unnecessary for this study
37. Consider all structure work performed from deck level
38. No dropping of concrete to surfaces below allowed
39. Special deck removal operations considered. See sequence
40. Prefabricated deck rebar cage use anticipated
41. No new chain link railing anticipated on structure
42. No special high strength concrete anticipated for use
43. Stud connectors to be employed to make the deck composite
44. Epoxy coated rebar employed for all applications
45. Drill and bond dowels to be employed at abutments
46. Paving notch extensions incorporated for structure approaches
47. Existing lead paint anticipated, with associated containment system
48. Existing utility temporary support system required
49. Conduits incorporated into new barriers at edge of decks
50. Drainage system work incorporated into study

GENERAL COMMENT

Deck replacement for this structure will be a complicated undertaking. Multiple constraints imposed, place limits on the design and construction operations to be employed. A large number of deck replacement alternatives were evaluated as part of this study. The removal and construction design and details shown herein, represent one selected alternative. Additional traffic handling studies are required to address remaining concerns.

APPROXIMATE CONSTRUCTION SEQUENCE

Longitudinal Progression of Work Along Length of Structure

1. Remove barrier
2. Saw cut existing deck total depth into segments
3. Core holes in existing deck for segment lifting
4. Lift deck segments off girders
5. Chip retained deck concrete from girder flanges
6. Remove abutment portions and approach sections
7. Spot blast and clean girders
8. Place permanent steel deck forms
9. Place stud connectors on girders
10. Place deck and abutment reinforcement
11. Cast deck and abutment concrete and cure
12. Place barrier reinforcement
13. Cast barrier concrete and cure
14. Grade for structure approaches
15. Place structure approach reinforcement
16. Cast structure approach concrete and cure
17. Place joint seals
18. Clean and paint structural steel

ESTIMATING NOTES AND ASSUMPTIONS

1. Single stage approach with long-term closure
2. Traffic detoured away from structure.
3. Unit prices derived from 04-1A3201 BEES- similar project
4. Temporary Railing Type K not included in estimate
5. Roadway approach work not included in estimate
6. Barrier transitions not included in estimate
7. No bridge mounted utility work included in estimate
8. No bridge mounted light standards included in estimate
9. Lightweight concrete not considered for employment
10. Epoxy reinforcement employed in deck and barriers
11. Protection system employed- unit price based deck area
12. Girder survey - unit price based off concrete price

-------- Denotes Existing
——— Denotes New Construction

ALTERNATIVE No. 3

PLANNING STUDY

ALEMANY CIRCLE UNDERCROSSING

DECK REPLACEMENT

DESIGNED BY M. Van De Pol	DATE 8/2011	STRUCTURE DESIGN BRANCH 9	BRIDGE NO. 34-0033 / UNIT: 04
DRAWN BY M. Van De Pol	DATE 8/2011		
CHECKED BY J. O'Brien	DATE 8/2011		SCALE: Varies / PROJECT NUMBER & PHASE: 0412000141 K
APPROVED G. Danke	DATE 8/2011		

ATTACHMENT C

PEAR

PRELIMINARY ENVIRONMENTAL ANALYSIS REPORT

Project Information

District 04	County SF	Route 101	PM 2.03	EA 3G620K
Project Title Bridge Deck Replacement				
Project Manager Somchai Chongchaikit			Phone # 510.622.8868	
Project Engineer Gamini Randeni			Phone # 510.286.4918	
Environmental Office Chief/Manager Melanie Brent			Phone # 510.286.5231	
PEAR Preparer Peter Frey			Phone # 510.622.8835	

Project Description

Purpose and Need

The purpose of this project is to restore the facility to the state of good repair and to extend its service life. The need is to improve the structural deficiencies and functional obsolescence of the existing facilities, and improve safety.

Description of work

The project is located in San Francisco County in the city of San Francisco on Route 101 at the Alemany Circle Undercrossing Bridge No. 34-0033 (PM 20.3). This project proposes to replace the concrete deck. Additionally, drainage work may be required.

Alternatives
The build alternative includes the elements described above. The no build alternative leaves the existing facility unchanged.

ATTACHMENT C

Anticipated Environmental Approval

CEQA		NEPA	
Environmental Determination			
Statutory Exemption	☐		
Categorical Exemption	☐	Categorical Exclusion	☒
Environmental Document			
Initial Study or Focused Initial Study with proposed Negative Declaration (ND) or Mitigated ND	☒	Routine Environmental Assessment with proposed Finding of No Significant Impact Complex Environmental Assessment with proposed Finding of No Significant Impact	☐ ☐
Environmental Impact Report	☐	Environmental Impact Statement	☐
CEQA Lead Agency (if determined): The California Department of Transportation (Caltrans) is the lead CEQA Agency for the project. FHWA assigned, and Caltrans has assumed, all of the United States Department of Transportation (USDOT) Secretary's responsibilities under NEPA.			
Estimated length of time (months) to obtain environmental approval:			18
Estimated person hours to complete identified tasks:			1687

PEAR Technical Summaries

Community Impacts: The proposed project will not result in adverse impacts on population growth/sprawl, local economy, municipal or community services, utility services, community character, or existing or proposed land use. There are no Title VI issues, adverse impacts to minority and low-income populations expected.

Visual/Aesthetics: The proposed project is not expected to adversely affect any scenic or visual resources.

Cultural Resources: This location is highly sensitive for buried archaeological deposits. This estimate is a worst case scenario, as it is unclear from the currently provided project description how much ground disturbing activity will occur. Therefore, this PEAR assumes much ground disturbance. Because the area is highly sensitive, an ASR and XP1 will be required. A record search will be necessary as well as native American consultation. No concerns re: architectural history.

Water Quality and Storm Water Runoff: This project must comply with the Department Statewide National Pollutant Discharge Elimination System (NPDES) Permit (Order No.: 99-06-DWQ) and the Construction General Permit (Order No.: 2009-0009-DWQ), both issued by the State Water Resources Control Board (SWRCB). Under the auspices of the SWRCB, the San Francisco Bay Regional Water Quality Control Board (Region 2) has authority to enforce NPDES and Construction General Permit requirements. To comply with these permits, the Department shall consider and incorporate temporary and permanent Best Management Practices (BMPs) using Best Available Technology (BAT) to the Maximum Extent Practicable (MEP), in order to minimize, or prevent, any potential increased impact to existing water quality.
Per the Construction General Permit, development and implementation of a Storm Water Pollution Prevention Plan (SWPPP) is required; this shall be prepared per Department Standard Special Provision (SSP) 07-345. The SWPPP is developed by the Contractor, and approved by the Department, prior to commencement of construction.

Hazardous Waste/Materials: The proposed project will require testing of the structure for asbestos. The testing will take place during the design phase.

Air Quality: The Project is exempt from the requirement of air quality conformity determination. An air quality study is not required.

Noise and Vibration: The Project has no traffic noise impacts. A noise study will not be required.

Biological Environment:

Flora/Fauna:
The US Fish and Wildlife Service and California Department of Fish and Game's California Natural Diversity Database (CNDDB) list numerous threatened/endangered species that have the potential to occur in the San Francisco South U.S. Geological Survey Quadrangle, which covers the project area (see the attached species lists). Included in this list are the California red-legged frog (*Rana aurora draytonii*), the San Francisco garter snake (*Thamnophis sirtalis tetrataenia*). However, upon preliminary review it is unlikely for these species to occur in this area due to the urban surroundings and absence of water source. A site assessment will need to be conducted to insure that listed T/E species and species of special concern do not occur in the area

The Federal Migratory Bird Treaty Act (16 U.S.C. 703 et seq.), Title 50 Code of Federal Regulations part 10, and California Fish and Game Code Sections 3503,3513 and 3800 protect migratory birds, occupied nests and their eggs. Birds nest in a variety of places which include trees, shrubs, bridges and other man-made structures and on the ground.

Numerous species of bats use bridges for roosting habitat. Many of these bats are Species of Special Concern. A site assessment will need to be conducted to determine if these bridge structures are being used by bats as roosting habitat.

Waters/Wetlands:
No wetlands or waters are expected to occur in the project vicinity upon initial windshield survey and review of aerial images. This will need to be confirmed with an actual site visit. However since the project is to replace the bridge deck, it is unlikely that the project would impact any wetlands and waters. If any wetlands or waters occur in the project area they should be avoided, and designated as ESA's.

Permits:
It is unlikely that any permits will be required for this project. A site assessment and a complete project description will be needed to confirm this.

Schedule
If construction work is scheduled during the bird-nesting season (approximately February 1st to August 15th), then a pre-construction survey for nesting birds must occur.

Mitigation:
This project is not expected to require any mitigation.

Please allow the Office of Biological Sciences and Permits the opportunity to review your plans as they progress. If you have any questions regarding these comments please contact biologist, Katie Thoreson at (510) 286-6375.

Context Sensitive Solutions: Context sensitive solutions meet transportation goals in harmony with community goals and natural environments. They require careful, imaginative, and early planning and continuous community involvement. There were no early planning activities and community involvement efforts that were undertaken during this initial phase of project development. The project, by its nature is not expected to conflict in harmony with community goals and the natural environment.

Disclaimer

This Preliminary Environmental Analysis Report (PEAR) provides information to support programming of the proposed project. It is not an environmental determination or document. Preliminary analysis, determinations, and estimates of mitigation costs are based on the project description provided in the Project Study Report (PSR). The estimates and conclusions in the PEAR are approximate and are based on cursory analyses of probable effects. A reevaluation of the PEAR will be needed for changes in project scope or alternatives, or in environmental laws, regulations, or guidelines.

Review and Approval

I confirm that environmental cost, scope, and schedule have been satisfactorily completed and that the PEAR meets all Caltrans requirements. Also, if the project is scoped as a routine EA, complex EA, or EIS, I verify that the HQ DEA Coordinator has concurred in the Class of Action.

Valerie Shearer
Environmental Branch Chief

Date: 9/16/2011

Project Manager

Date: 9/16/2011

REQUIRED ATTACHMENTS:
Attachment A: Environmental Technical Reports or Studies Required
Attachment B: PEAR Mitigation and Compliance Cost Estimate

Attachment A: Environmental Technical Reports or Studies Required

	Study or Report	Document Text Only	Not Anticipated
Community Impact Study	☐	☐	☒
Farmland	☐	☐	☒
Section 4(f) Evaluation	☐	☐	☒
Visual Resources	☐	☐	☒
Water Quality	☒	☐	☐
Floodplain Evaluation	☐	☐	☒
Noise Study	☐	☒	☐
Air Quality Study	☐	☒	☐
Paleontology	☐	☐	☒
Wild and Scenic River Consistency	☐	☐	☒
Cumulative Impacts	☐	☐	☒
Growth Inducing/Indirect Impacts	☐	☐	☒
Cultural			
Archaeological Survey Report (ASR)	☒	☐	☐
Historic Resources Evaluation Report (HRER)	☐	☐	☒
Historic Property Survey Report (HPSR)	☒	☐	☐
Historical Resource Compliance Report	☐	☐	☒
SHPO / PRC 5024.5	☐	☐	☒
Native American Coordination	☒	☐	☐
Other Finding of Effect:	☐	☐	☒
Data Recovery Plan:	☐	☐	☒
Memorandum of Agreement* (*if Federal Permit is required)	☐	☐	☒
Hazardous Waste			
ISA (Additional)	☐	☐	☒
PSI	☒	☐	☐
Other	☐	☐	☐
Biological			
Endangered Species (Federal)	☐	☒	☐
Endangered Species (State)	☐	☒	☐
Species of Concern (CNPS, USFS, BLM, S, F)	☐	☒	☐
Biological Opinion (USFWS, NMFS, State)	☒	☐	☐
Fish Passage Barriers Assessment	☐	☐	☒
Wetlands	☐	☐	☒
Invasive Species	☐	☒	☐
Natural Environment Study	☒	☐	☐
NEPA 404 Coordination	☐	☐	☒
Other	☐	☐	☐

Permits

401 Permit Coordination	☐	☐	☐
404 Permit Coordination	☐	☐	☒
1602 Permit Coordination	☐	☐	☒
City/County Coastal Permit Coordination	☐	☐	☒
State Coastal Permit Coordination	☐	☐	☒
NPDES Permit (402) Coordination	☒	☐	☐
US Coast Guard (Section 10)	☐	☐	☒

Attachement B: PEAR Mitigation and Compliance Cost Estimate*

District 04	County SF	Route 101	PM 2.03	EA 3G620K

Description of Work Bridge Deck Replacement

Project Manager	Somchai Chongchaikit	Date	

Prepared by	Peter Frey	Date	

	Mitigation			Compliance
	Project Feature[1]	Enviro. Obligation[2]	Statutory Require.[3]	Permit & Agreement[4]
Fish & Game 1602 Agreement				
Coastal Development Permit				
State Lands Agreement				
NPDES Permit				
COE 404 Permit- Nationwide				
COE 404 Permit- Individual				
COE Section 10 Permit				
COE Section 9 Permit				
Other: Noise attenuation				
Special landscaping				
Archaeological				
Biological				
Wetland/riparian				
Historical				
Scenic resources				
Asbestos Testing/Mitigation				
Other:				
TOTAL (Enter zeros if no cost)	TBD	TBD	TBD	TBD

Costs are to include all costs to complete the commitment including: 1) capital outlay and staff support; 2) cost of right-of-way or easements; 3) long-term monitoring and reporting; and 4) any follow-up maintenance.

[1] Mitigation that Caltrans would normally do if not required by a permit or environmental agreement.
[2] Mitigation that Caltrans would not normally do but is required by conditions of a permit or environmental agreement.
[3] Mitigation that Caltrans would not normally do and is not required by a permit or Enviro. Agreement, but is required by a law.
[4] Non-mitigation Caltrans would not normally do but is required by conditions of a permit or agreement.

*Prepare a separate form for each practicable alternative in the PSR.

ATTACHMENT D

STORM WATER DATA REPORT

Dist-County-Route: 04-SF-101
Post Mile Limits: 2.03
Project Type: Bridge Deck Replacement
Project ID (or EA): 04-3G620K
Program Identification: 20.20.201.110
Phase: ☒ PID
☐ PA/ED
☐ PS&E

Regional Water Quality Control Board(s): San Francisco Bay (Region 2)

1.	Is the project required to consider incorporating Treatment BMPs?	Yes ☐	No ☒
2.	Does the project disturb 5 or more acres of soil?	Yes ☐	No ☒
3.	Does the project disturb more than 1 acre of soil and not qualify for the Rainfall Erosivity Waiver?	Yes ☐	No ☒
4.	Does the project potentially create permanent water quality impacts?	Yes ☐	No ☒
5.	Does the project require a notification of ADL reuse	Yes ☐	No ☒

If the answer to any of the preceding questions is "Yes", prepare a Long Form – Storm Water Data Report.

Estimate Construction Start Date: 06/01/2016 Construction Completion Date: 06/01/2017

Separate Dewatering Permit (if yes, permit number) Yes ☐ Permit #_____ No ☒

Erosivity Waiver Yes ☐ Date: _____ No ☒

This Short Form – Storm Water Data Report has been prepared under the direction of the following Licensed Person. The Licensed Person attests to the technical information contained herein and the data upon which recommendations, conclusions, and decisions are based. Professional Engineer or Landscape Architect stamp required at PS&E.

Gamini D. Randeni 09/09/2011

Gamini Randeni, Registered Project Engineer/Landscape Architect *Date*

I have reviewed the stormwater quality design issues and find this report to be complete, current and accurate:

09/09/2011

Brian J. Rowley, District/Regional SW Coordinator or Designee *Date*

[Stamp Required for PS&E only)

ATTACHMENT D

ATTACHMENT E

RIGHT OF WAY DATA SHEET

RIGHT OF WAY DATA SHEET

TO: Design SHOPP Safety

Date 8/25/2011 D.S. # 5981
Dist. 04 Co. SF Rte 101 PM 2.03
EA 04-3G620K

ATTN: GAMINI RANDENI

Project Description: Bridge Deck Replacement

SUBJECT: Right of Way Data - Alternate No.

1. Right of Way Cost Estimate:

		Current Value (Future Use)	Escalation Rate	Escalated Value
A.	Acquisition, including Excess Lands, Damages, and Goodwill	$0.00	%	$0.00
	Project Permit Fees			$0.00
	Grantor's Appraisal Cost			$0.00
B.	Utility Relocation (State Share)	$5,000.00	%	$5,000.00
C.	Railroad (from page 6)			$0.00
D.	Relocation Assistance	$0.00	%	$0.00
E.	Clearance Demolition	$0.00	%	$0.00
F.	Title and Escrow Fees	$0.00	%	$0.00
G.	TOTAL ESCALATED VALUE			$5,000.00
H.	Construction Contract Work	$0.00		

2. Anticipated Date of Right of Way Certification 4/2013

3. Parcel Data:

	Type	Dual/Appr
X		
A		
B		
C		
D		
E	XXXX	
F	XXXX	

Total 0

Utilities	
U4-1	
-2	
-3	
-4	
U5-7	2
-8	
-9	

RR Involvements	
None	X
C&M Agrmt	
Svc Cont.	
Design	
Const.	
Lic/RE/Clauses	

Misc R/W Work	
RAP Displ	0
Clear Demo	0
Const. Permits	0
Condemnation	0

Areas: Right of Way _____ No. Excess Parcels _____ Excess _____

Enter PMCS Screens 8/26/11 By _____

Enter AGRE Screen (Railroad Data Only) _____ By _____

ATTACHMENT E

4. Are there any major items of construction contract work?
Yes ☐ No ☑ (If yes, explain)

5. Provide a general description of the right of way and excess lands required(zoning, use, major improvements critical or sensitive parcels, etc.).
No right of way required. ☑

6. Is there an effect on assessed valuation? (If yes explain)
Yes ☐ Not Significant ☐ No ☑

7. Are utility facilities or rights of way affected? Yes ☑ No ☐
If yes, attach Utility Information Sheet Exhibit 01-01-05)

8. Are railroad facilities or rights of way affected? Yes ☐ No ☑
If yes, attach Railroad Information Sheet Exhibit 01-01-06)

9. Were any previously unidentified sites with hazardous waste and/or material found?
Yes ☐ None evident ☑
(If yes, attach memorandum per Procedural Handbook Volume 1, Section 101.011)

10. Are RAP displacements required? Yes ☐ No ☑
(If yes, provide the following information)

No. of single family _____ No. of business/non profit _____

No. of multi-family _____ No. of farms _____

Based on Draft / Final Relocation Impact Statement / Study dated _____, it is anticipated that sufficient replacement housing will / will not be avaialable without Last Resort Housing.

11. Are material borrow and / or disposal sites required? Yes ☐ No ☑
(If yes, expalin)

12. Are there potential relinquishments / abandonments? Yes ☐ No ☑
(If yes, expalin)

13. Are there any existing and/or potential Airspace sites? Yes ☐ No ☑
(If yes, expalin)

14. Are there Environmental Mitigation costs? Yes ☐ No ☑
(If yes, explain)

15. Indicate the anticipated Right of Way schedule and lead time requirements. (Discuss if District proposes less that PMCS lead time and / or if significant pressures for project advancement are anticipated.)

PYPSCAN lead time (from Regular R/W to project certification) 6 months.

16. Is it anticipated that all Right of Way work be performed by CALTRANS staff?
Yes ☑ No ☐ (If no, discuss)

Assumptions and Limiting Conditions

- This data sheet was completed without a hazardous waste/materials report.
- Information on this data sheet was based on maps provided by Gamini Randeni on 18-Aug-11

Evaluation Prepared By: Renata Frey

Right of Way: Name Renata Frey Date 8/25/11

Railroad: Name [illegible] Date 8/25/11

Utilities: Name [illegible] Date 8-25-11

Recommended for Approval:

[illegible]

Right of Way Capital Cost Coordinator

I have personally reviewed this Right of Way Data Sheet and all supporting information. It is my opinion that the probable Highest and Best Use, estimated values, escalation rates, and assumptions are reasonable and proper subject to the limiting conditions set fourth, and find this Data Sheet complete and current.

[illegible]

Chief, R/W Appraisal Services

9.1.11

Date

cc: Program Manager
Project Manger

UTILITY INFORMATION SHEET

1. Utility owners located within project limits:
AT&T, PG&E

2. Facilities potentially impacted by project (if known, include Owners(s) & facility type(s)):

3. Anticipated Workload:

X	Utility Verification required
X	Positive Identification
	Utility Relocation
	Other (Specify)

4. Additional information concerning anticipated utility involvements (include limiting conditions and a narative addressing likelihood that conflicts will occur);

_____ Involves possible relocation of electric transmission facilities
(If X'd, Data sheet should be forwarded to environmental)

5. PMCS input information

U4-1		Owner Expense Involvements
U4-2		State Expense Involvements *(Conventional, No Fed Aid)*
U4-3		State Expense Involvements *(Freeway, No Fed Aid)*
U4-4		State Expense Involvements *(Conventional or Freeway, Fed Aid)*
U5-7	2	Verifications - without involvements
U5-8		Verifications - 50% involvements
U5-9		Verifications resulting in involvements

NOTE: The sum od U-4's must equal the sum of ½ of the U5-8's and all of the U5-9's.

ESTIMATED STATE SHARE OF COSTS $ 5,000.00

Perepared by: Nick Psiol

Right of Way Utility Coordinator

8-25-11
Date

ATTACHMENT F

TRANSPORTATION MANAGEMENT PLAN DATA SHEET

TRANSPORTATION MANAGEMENT PLAN DATA SHEET
(Preliminary TMP Elements and Costs)

Co/Rte/PM San Francisco County PM 2.0 EA 412000141 Project Engineer Gamini Randeni

Project Limit San Francisoc City and County at the Alemany Undercrossing PM 2.0

Project Description Bridge Deck Replacement of Alemany Circle UC
Stage Construction Alternative 1 Lane Splitting

1) Public Information

- [ ] a. Brochures and Mailers $
- [ ] b. Press Release
- [ ] c. Paid Advertising $
- [ ] d. Public Information Center/Kiosk $
- [ ] e. Public Meeting/Speakers Bureau
- [ ] f. Telephone Hotline
- [ ] g. Internet, E-mail
- [ ] h. Notification to impacted groups (i.e. bicycle users, pedestrians with disabilities, others…)
- [x] i. Others $100,000

2) Motorist Information Strategies

- [x] a. Changeable Message Signs (Fixed) $250,000
- [ ] b. Changeable Message Signs (Portable) $
- [x] c. Ground Mounted Signs $10,000
- [ ] d. Highway Advisory Radio $
- [ ] e. Caltrans Highway Information Network (CHIN)
- [ ] f. Detour maps (i.e. bicycle, vehicle, pedestrian...etc)
- [ ] g. Revised Transit Schedules/maps
- [ ] h. Bicycle community information
- [ ] i. Others

$

3) Incident Management

- [x] a. Construction Zone Enhanced Enforcement Program (COZEEP) $740,000
- [x] b. Freeway Service Patrol $360,000
- [ ] c. Traffic Management Team
- [ ] d. Helicopter Surveillance $
- [ ] e. Traffic Surveillance Stations (Loop Detector and CCTV) $
- [ ] f. Others $

ATTACHMENT F

4) Construction Strategies

- [ ] a. Lane Closure Chart
- [ ] b. Reversible Lanes
- [ ] c. Total Facility Closure
- [ ] d. Contra Flow
- [ ] e. Truck Traffic Restrictions $ _____
- [ ] f. Reduced Speed Zone $ _____
- [ ] g. Connector and Ramp Closures
- [ ] h. Incentive and Disincentive $ _____
- [ ] i. Moveable Barrier $ _____
- [ ] _____ _____
- [ ] k. Others _____ $ _____

5) Demand Management

- [ ] a. HOV Lanes/Ramps (New or Convert) $ _____
- [ ] b. Park and Ride Lots $ _____
- [ ] c. Rideshare Incentives $ _____
- [ ] d. Variable Work Hours
- [ ] e. Telecommute
- [ ] f. Ramp Metering (Temporary Installation) $ _____
- [ ] g. Ramp Metering (Modify Existing) $ _____
- [x] h. Others Enhance Transit and Regional Demand Mitigations $215,000

6) Alternate Route Strategies

- [ ] a. Add Capacity to Freeway Connector $ _____
- [ ] b. Street Improvement (widening, traffic signal... etc) $ _____
- [ ] c. Traffic Control Officers $ _____
- [ ] d. Parking Restrictions
- [ ] e. Others Improvements $100,000

7) Other Strategies

- [ ] a. Application of New Technology $ _____
- [x] e. Others _____ $ _____

TOTAL ESTIMATED COST OF TMP ELEMENTS = $1,775,000

*Please note that any changes in project scope, schedule, or cost will require resubmittal of TMP Data Sheet request.

PREPARED BY Chung Ly DATE 9/9/2011

APPROVAL RECOMMENDED BY Ronald Lo DATE 9-12-2011

TRANSPORTATION MANAGEMENT PLAN DATA SHEET
(Preliminary TMP Elements and Costs)

Co/Rte/PM: San Francisco County PM 2.0 EA 412000141 Project Engineer: Gamini Randeni

Project Limit: San Francisoc City and County at the Alemany Undercrossing PM 2.0

Project Description: Bridge Deck Replacement of Alemany Circle UC
Stage Construction Alternative 2 Median Crossing

1) Public Information

- [ ] a. Brochures and Mailers $
- [ ] b. Press Release
- [ ] c. Paid Advertising $
- [ ] d. Public Information Center/Kiosk $
- [ ] e. Public Meeting/Speakers Bureau
- [ ] f. Telephone Hotline
- [ ] g. Internet, E-mail
- [ ] h. Notification to impacted groups (i.e. bicycle users, pedestrians with disabilities, others…)
- [x] i. Others $100,000

2) Motorist Information Strategies

- [x] a. Changeable Message Signs (Fixed) $300,000
- [ ] b. Changeable Message Signs (Portable) $
- [x] c. Ground Mounted Signs $10,000
- [ ] d. Highway Advisory Radio $
- [ ] e. Caltrans Highway Information Network (CHIN)
- [ ] f. Detour maps (i.e. bicycle, vehicle, pedestrian...etc)
- [ ] g. Revised Transit Schedules/maps
- [ ] h. Bicycle community information
- [ ] i. Others

$

3) Incident Management

- [x] a. Construction Zone Enhanced Enforcement Program (COZEEP) $800,000
- [x] b. Freeway Service Patrol $410,000
- [ ] c. Traffic Management Team
- [ ] d. Helicopter Surveillance $
- [ ] e. Traffic Surveillance Stations (Loop Detector and CCTV) $
- [ ] f. Others $

4) Construction Strategies

- [ ] a. Lane Closure Chart
- [ ] b. Reversible Lanes
- [ ] c. Total Facility Closure
- [ ] d. Contra Flow
- [ ] e. Truck Traffic Restrictions $ _____
- [ ] f. Reduced Speed Zone $ _____
- [ ] g. Connector and Ramp Closures
- [ ] h. Incentive and Disincentive $ _____
- [ ] i. Moveable Barrier $ _____
- [ ] _____ _____
- [ ] k. Others _____ $ _____

5) Demand Management

- [ ] a. HOV Lanes/Ramps (New or Convert) $ _____
- [ ] b. Park and Ride Lots $ _____
- [ ] c. Rideshare Incentives $ _____
- [ ] d. Variable Work Hours
- [ ] e. Telecommute
- [ ] f. Ramp Metering (Temporary Installation) $ _____
- [ ] g. Ramp Metering (Modify Existing) $ _____
- [x] h. Others Enhance Transit and Regional Demand Mitigations $220,000

6) Alternate Route Strategies

- [ ] a. Add Capacity to Freeway Connector $ _____
- [ ] b. Street Improvement (widening, traffic signal... etc) $ _____
- [ ] c. Traffic Control Officers $ _____
- [ ] d. Parking Restrictions
- [x] e. Others Additional Improvements $100,000

7) Other Strategies

- [ ] a. Application of New Technology $ _____
- [ ] e. Others _____ $ _____

TOTAL ESTIMATED COST OF TMP ELEMENTS = $1,940,000

*Please note that any changes in project scope, schedule, or cost will require resubmittal of TMP Data Sheet request.

PREPARED BY Chung Ly DATE 9/9/2011

APPROVAL RECOMMENDED BY Ronald [illegible] DATE 9/12/2011

TRANSPORTATION MANAGEMENT PLAN DATA SHEET
(Preliminary TMP Elements and Costs)

Co/Rte/PM: San Francisco County PM 2.0 EA 412000141 Project Engineer: Gamini Randeni

Project Limit: San Francisoc City and County at the Alemany Undercrossing PM 2.0

Project Description: Bridge Deck Replacement of Alemany Circle UC
Stage Construction Alternative 3 Full Closure
(TMP DOES NOT RECOMMEND THIS SCENERIO)

1) Public Information

- [ ] a. Brochures and Mailers $
- [ ] b. Press Release
- [ ] c. Paid Advertising $
- [ ] d. Public Information Center/Kiosk $
- [ ] e. Public Meeting/Speakers Bureau
- [ ] f. Telephone Hotline
- [ ] g. Internet, E-mail
- [ ] h. Notification to impacted groups (i.e. bicycle users, pedestrians with disabilities, others…)
- [x] i. Others $100,000

2) Motorist Information Strategies

- [x] a. Changeable Message Signs (Fixed) $80,000
- [ ] b. Changeable Message Signs (Portable) $
- [x] c. Ground Mounted Signs $10,000
- [ ] d. Highway Advisory Radio $
- [ ] e. Caltrans Highway Information Network (CHIN)
- [ ] f. Detour maps (i.e. bicycle, vehicle, pedestrian...etc)
- [ ] g. Revised Transit Schedules/maps
- [ ] h. Bicycle community information
- [x] i. Others

Additional PIO $30,000

3) Incident Management

- [x] a. Construction Zone Enhanced Enforcement Program (COZEEP) $1,300,000
- [x] b. Freeway Service Patrol $430,000
- [ ] c. Traffic Management Team
- [ ] d. Helicopter Surveillance $
- [ ] e. Traffic Surveillance Stations (Loop Detector and CCTV) $
- [ ] f. Others $

4) Construction Strategies

- [ ] a. Lane Closure Chart
- [ ] b. Reversible Lanes
- [ ] c. Total Facility Closure
- [ ] d. Contra Flow
- [ ] e. Truck Traffic Restrictions $ _____
- [ ] f. Reduced Speed Zone $ _____
- [ ] g. Connector and Ramp Closures
- [ ] h. Incentive and Disincentive $ _____
- [ ] i. Moveable Barrier $ _____
- [ ] _____ _____
- [ ] k. Others _____ $ _____

5) Demand Management

- [ ] a. HOV Lanes/Ramps (New or Convert) $ _____
- [ ] b. Park and Ride Lots $ _____
- [ ] c. Rideshare Incentives $ _____
- [ ] d. Variable Work Hours
- [ ] e. Telecommute
- [ ] f. Ramp Metering (Temporary Installation) $ _____
- [ ] g. Ramp Metering (Modify Existing) $ _____
- [x] h. Others Enhance Transit and Regional Demand Mitigations $1,200,000

6) Alternate Route Strategies

- [ ] a. Add Capacity to Freeway Connector $ _____
- [ ] b. Street Improvement (widening, traffic signal... etc) $ _____
- [ ] c. Traffic Control Officers $ _____
- [ ] d. Parking Restrictions
- [x] e. Others All of the above $250,000

7) Other Strategies

- [ ] a. Application of New Technology $ _____
- [x] e. Others Contingency Routes $100,000

TOTAL ESTIMATED COST OF TMP ELEMENTS = $3,500,000

*Please note that any changes in project scope, schedule, or cost will require resubmittal of TMP Data Sheet request.

PREPARED BY Chung Ly DATE 9/9/2011

APPROVAL RECOMMENDED BY Randy Iseff DATE 9/12/2011

ATTACHMENT G

SCOPING TEAM FIELD REVIEW ATTENDANCE ROSTER

EA 04-3G620K SF-101-2.0
ALEMANY CIRCLE UC #34-0033
SCOPING TEAM REVIEW
ATTENDANCE ROSTER
8/25/11

Name	Functional Unit	Phone No.
MEI-LING LEUNG	Hwy ops	510-286-4532
John Thomas	Traffic	6-4603
Steve Royce	Maint Services	6-4501
Larry Moore	HQ Design	916-653-2647
Abdul Reja	Maint. & TBE	510-622-5987
DIXON LAM	Hydraulics	510-286-4854
FRANK GYURCSIK	CT. MAINTENANCE	650-444-4034
PAUL G. WILCOX	C.T. MAINTENANCE	408-590-6764
SAM WANG	CT. CONSTRUCTION.	408-210-8204
JOHN GILLIS	STR. MAINTENANCE	916-227-8774
Nick Tsai	STR Const.	510-385-7141
Gamini Randeni	Design SHOPP Safety	510-286-4918
PATRICK NG	"	510-286-5061

ATTACHMENT G