Project Study Report
(Roadway Protective Betterment)
to
Request Programming in a future SHOPP Cycle

01-HUM-96 PM 10.5/10.7
Program Code: 20.10.201.150
01-38490K
July 2009

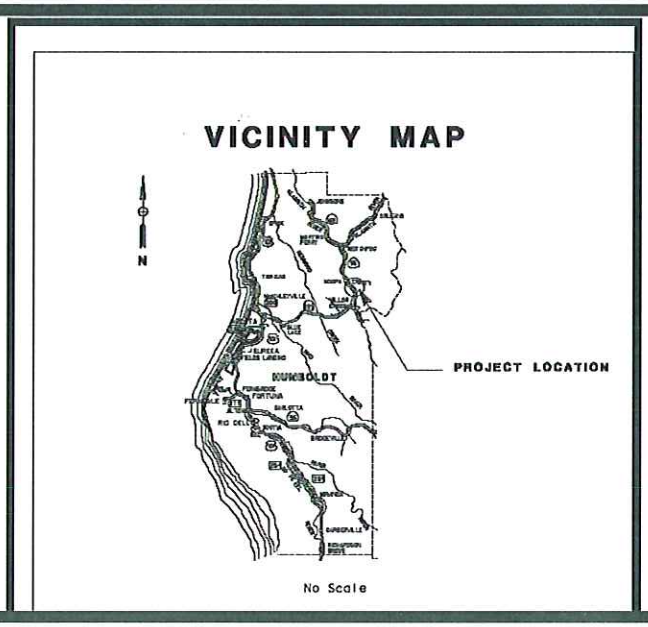

In Humboldt County near Hoopa from 1.1 to 0.9 mile west of Supply Creek Bridge.

Route 96 at Hoopa

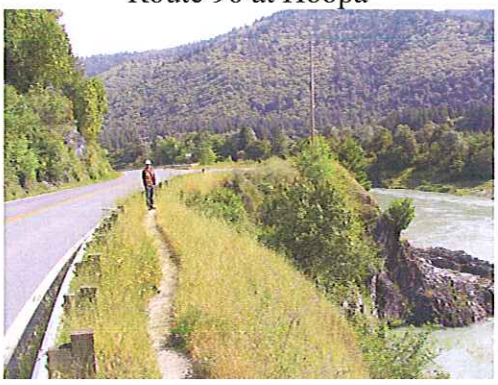

Route 96 EB erosion location

I have reviewed the right of way information contained in this Project Study Report and the R/W Data Sheet attached hereto, and find the data to be complete, current and accurate:

Dave M Parlen for

Lindy K. Lee
North Region Division Chief – Right of Way

APPROVAL RECOMMENDED:

Richard Mullen

Richard Mullen
Project Manager

Royal McCarthy
Program Advisor

APPROVED:

Charles C Fielder

CHARLES C. FIELDER
District Director

August 11, 2009

Date

This Project Study Report (PSR) has been prepared under the direction of the following registered civil engineer in the District 1 Advance Planning Office. The registered civil engineer attests to the technical information contained herein and has judged the qualifications of any technical specialists providing engineering data upon which recommendations, conclusions, and decisions are based.

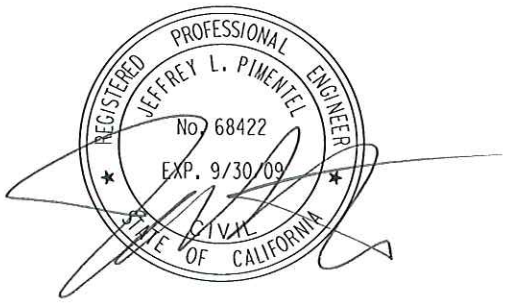

Jeffrey Pimentel
Registered Civil Engineer

7/2/09
DATE

Project Study Report

1. INTRODUCTION

This project proposes to construct four concrete slab viaducts in the eastbound direction and increasing shoulder widths to 4 feet between PM 10.5 and PM 10.7 along Route 96 in Humboldt County near the town of Hoopa. See location map (Attachment A).

The scope of work of this roadway protective betterment project will provide additional shoulder width, culvert replacement and replace and/or reconstruct the existing metal beam guardrail. The concrete slab viaduct locations are (Project Layout Attachment C):

- Section 1, from Sta. 256+04 to Sta. 256+91, structure total length 87 feet
- Section 2, from Sta. 253+80 to Sta. 254+60, structure total length 80 feet
- Section 3, from Sta. 251+22 to Sta. 252+50, structure total length 128 feet
- Section 4, from Sta. 248+60 to Sta. 249+51, structure total length 91 feet

Route 96 in Humboldt County is a two lane conventional highway with narrow shoulders that range from 0' to 4' within the project limits, see Typical Sections (Attachment B).

The estimated construction cost is $3,473,000 (year 2014/15). The total Right of Way items are $259,000 (year 2014/15). The total project cost is $3,732,000 (year 2014/15).

Project Limits: (Dist., Co., Rte., PM)	01-HUM-96 PM 10.5/10.7
Number of Alternatives:	2
Alternative Recommended for Programming:	Alternative 1
Programmed or Proposed Capital Construction Costs:	$3.5 million (20014/15 FY)
Programmed or Proposal Capital Right of Way Costs:	$259,000 (20014/15 FY)
Funding Source:	SHOPP
Type of Facility (conventional, expressway, freeway):	Conventional 2-Lane
Number of Structures:	4
Anticipated Environmental Determination/Document:	CE/CE
Legal Description:	In Humboldt County near Hoopa from 1.1 to 0.9 mile west of Supply Creek Bridge.
Project Category:	201.150

2. BACKGROUND

A. Project History

This location had a history of slides that would close the highway and required a significant amount of field maintenance resources to reopen. The original proposal initiated by the program sponsor was to construct a viaduct through the slide area. A project kick off meeting, in the fall of 2008, revealed that the amount of slide material depositing on the highway has decreased over recent years. In addition a combination of uphill slides blocking inlets of drainage facilities and redirecting runoff over the highway have eroded the outside shoulder. The erosion is compromising the integrity of the existing metal beam guardrail and lessening the area of pedestrian access. The project development team (PDT), with the approval from the project sponsor, agreed to adjust the scope to study four (4) concrete slab viaducts. This revised scope would restore some of the highway width for ease in removing slide material and allow for safer access for pedestrians.

B. Existing Facility

Route 96 originates at Route 299 in the community of Willow Creek in Humboldt County and leads to Interstate 5 about six miles north of the City of Yreka. Route 96 follows the Trinity River to Weitchpec where it turns to follow the Klamath River in a northeasterly direction, traversing remote and sparsely populated areas of northwestern California. It is functionally classified as Rural Minor Arterial. Route 96 in Humboldt County is broken into two segments, the first segment has a higher traffic volume and the terrain is mountainous and the gradeline is rolling, while segment 2 has less traffic volume and the terrain is rolling as well as the gradeline. These two segments are illustrated in the following table:

Segment #	HUM 96 PM	DESCRIPTION
1	0.0/16.0	From Route 299 to 0.8 miles south of Rock Chute Viaduct
2	16.0/R45.0	From 0.8 miles south Rock Chute Viaduct to HUM Co. line

C. Geometric Information

This project is part of segment 1 of Route 96 on mountainous terrain and rolling grade line. It is a 2-lane conventional highway with two 12' lanes and two 0'-4' shoulders. The Advisory and Mandatory Design Exceptions have been approved and can be found in the project files.

3. PURPOSE AND NEED

Need: This segment of Route 96 has experienced significant erosion due to river scour and roadway runoff. This erosion has compromised the existing metal beam guardrail posts and reduced the existing shoulder width.

Purpose: The purpose of this roadway betterment project is to restore the existing metal beam guardrail and shoulder width through this section of Route 96.

4. DEFICIENCIES

The shoulders along this section of roadway have deteriorated in four locations:

(1) PM 10.49

(2) PM 10.54

(3) PM 10.59

(4) PM 10.63

Traffic Data:

The current and forecasted traffic data is listed below. This data was provided in a memorandum dated January 30, 2009 from the Office of Travel Forecasting and Modeling.

	Annual ADT	Peak Hour
Base Year 2007	3,600	370
2010	3,710	380
2020	4,070	420
2030	4,430	460

20-Year Directional percentage:	60
20-Year DH Truck percentage:	1.0
10-Year Traffic Index:	7.0
20-Year Traffic Index:	8.0

10-Year TI (Shoulder):	4.5
20-Year TI (Shoulder):	5.0

Level of Service decreases are anticipated as traffic volumes increase, however, level of service is expected to remain within acceptable levels in 2030.

Additionally, a traffic collision analysis was performed for this segment of Route 96. In the 5-year period from October 1, 2002 through September 30, 2007, there were 17 collisions within the limits

of this segment. The collision rate for this segment is 3.02 times greater than the statewide average for similar facilities. The actual fatal plus injury (F+I) collision rate is 2.78 times greater than the state wide average for similar facilities.

The tables below summarize the total number of collisions that have occurred within the project limits as well as a summary of the collisions details.

Table 1. Collision Rates (expressed in Collisions per Million Vehicles)

Collision	Actual			Statewide Average		
	Fatal	Fatal+Injury	Total	Fatal	Fatal+Injury	Total
Collision Rates	0	1.25	2.66	0.019	0.45	0.88

Table 2. Primary Collision Factors Reported

Factor	Speeding	Improper Turn	Other Violations	Other Than Driver	Failure to Yield	Influence of Alcohol
Number of Collisions	1	6	3	2	2	3

Table 3. Types of Collisions Reported

Type of Collision	Hit Object	Head-On	Broadside	Overturn
Number of Collisions	12	3	1	1

5. CORRIDOR AND SYSTEM COORDINATION

Route 96 in Humboldt County is a 2-lane conventional highway. Route 96 continues north from the District 1 boundary to Interstate 5 about six miles north of Yreka. The Route is approximately 44 miles in length within District 1.

This project conforms to the Hoopa Tribal Transportation Plan and is supported by the Hoopa Valley Tribal Environmental Protection Agency (TEPA).

Projects planned for this area include, a Hot Mix Asphalt Overlay Construction project underway (EA-452400) PM 16.0/18.7. A Traffic Safety Pedestrian ITS System (EA-48810K) PM 10.4/11.0, a Roadway Rehabilitation Project (EA-45940) PM 0.0/3.8 and a Downtown Enhancement Project (EA-494900) PM 10.7/11.0.

6. ALTERNATIVES

Two alternatives were considered, including the "No Build" Alternative.

Alternative 1

This project proposes to build four concrete slab viaducts and increasing shoulder widths to 4 feet at this location of Route 96.

The construction methods will include:

- Excavation and construction of the concrete slab viaducts
- Construction of type 732 concrete barrier along the edge of shoulder (ES) of the cantilever sections
- New structural section between the cantilever slab viaducts
- Asphalt concrete overlay from PM 10.5 to PM 10.7

Alternative 2

No build. This alternative does not meet the purpose and need of the project.

7. COMMUNITY INVOLVEMENT

There has been no community interaction in this project and it is anticipated that there will be no opposition to the planned improvements. Route 96 is the only major all-weather Route serving the Trinity and Klamath River Valleys. It is used to transport food and other essential supplies to communities along this corridor, and to transport goods to other markets.

8. RIGHT OF WAY

There will be $252,794 (year 2014/15) required in mitigation acquisition cost per data sheet. A Right of Way Data Sheet and Utility Information Sheet was prepared for this project, and is included as Attachment F.

9. ENVIRONMENTAL DETERMINATION AND ENVIRONMENTAL ISSUES

Route 96 bisects the Hoopa Valley Indian Reservation, providing virtually the only all weather road to and from the reservation. This Route is within the Six Rivers National Forest.

Preliminary Environmental Analysis Report

State Route 96 travels along the Trinity River, a Federally designated Wild and Scenic River. Several sensitive resources are associated with the river and the surrounding upland area, including State and Federal listed fish, bird, and plant species. Work windows for listed fish and birds may be required.

Anticipated permits and consultation include:

- U.S. Army Corps of Engineers (404)
- NOAA-Fisheries
- U.S. Fish and Wildlife Service
- California Department of Fish and Game (1602)
- Hoopa Tribe Consultation
- Hoopa Tribe (401)

The environmental commitments estimate is $50,000 for revegetation/monitoring, and $50,000 for wetland/riparian impacts. The general time schedule is nine to 12 months to complete a CE/CE, and six to 12 months for permits. The complete PEAR is included as Attachment E.

Storm Water Consultation

Soil stability and soil disturbance are factors of concern along many areas of Route 96. Water quality is also a concern in the Klamath and Trinity Rivers. A Storm Water Data Report (SWDR) was prepared. For additional details and requirements see the SWDR (Attachment H).

Landscape Architecture Assessment Sheet

A Landscape Architecture Assessment sheet was prepared for this project. It was determined the project will involve consideration of highway aesthetics and slope erosion control, for details see Attachment I.

Hazardous Waste

An Initial Site Assessment (ISA) was prepared for this project on May 8, 2009 and found no significant hazardous waste issues associated with this project. The removal of yellow thermoplastic stripe and disturbance of shoulder soils with Aerially Deposited Lead (ADL) and disposal of Treated Wood Waste (TWW) was listed as the only minor issues. The TWW will require disposal in a lined landfill. The ISA is included as Attachment J.

10. STRUCTURES ADVANCE PLANNING STUDY AND MATERIALS RECOMMENDATIONS

Structures Advance Planning Study

An Advance Planning Study (APS) was prepared for this project. Each concrete slab viaduct will be supported by 16" CIDH concrete piles 10 feet apart. Each concrete slab viaduct will have a section width of 13.42' including the Type 732 with Tubular Hand Railing. The APS was prepared showing a Concrete Barrier Type 732. A Concrete Barrier Type 80 may be provided in the final design if it is determined to be necessary. A Tubular Hand Railing for Pedestrians and Bicycles could also be attached to the Concrete Barrier Type 80. See Structure APS Attachment K.

The Division of Engineering Services, Geotechnical Services submitted a report with the foundation recommendations for the four viaducts.

Construction considerations for the cast-in-drilled-hole (CIDH) concrete piles are as follow:

- Seepage water may be encountered during pile installation and could be controlled by pumping to allow for the dry pile construction method.
- Temporary or permanent casing may be required to stabilize the drilled holes. The temporary casing must be removed from the rock socket after installation of the pile.
- The pile length is 30 feet long.

Preliminary Geotechnical Report

The bedrock along this area consists of metasedimentary rock, known as phyllite, of the Late Jurassic Galice Formation. The slope along this section of the River varies from 0.8:1 to almost vertical.

Geotechnical design has recommended 300 square feet of anchored wire mesh below concrete slab viaduct #3 to slow erosion of the cliff.

Materials Recommendations

Assuming an R-value of 10 and a 20 year Traffic Index of 8.0 which was provided by the Office of Traffic Forecasting and Modeling, the strategy proposed for the structural section for the mainline traffic and shoulder consist of:

	OGFC	HMA (Type A)	AB (Class 2)
Strategy 2	0.08'	0.40'	1.40'

For the concrete slab viaducts the recommended asphalt concrete overlay consists of:

	OGFC	HMA (Type A)
Strategy 1	0.08'	0.17'

For the culvert replacement it is recommended to use Alternative Pipe Culverts (APC).

11. OTHER CONSIDERATIONS

Design Exceptions

Fact Sheet Exception(s) To Mandatory Design Standard(s) includes the following features:

- Mandatory Design Exception Feature #1: The existing eastbound (EB) shoulder width for this section of the road, between PM 10.5 and 10.7, ranges between 0 and 4 ft wide. The existing westbound (WB) shoulder width in this section of the road is 2 ft. The proposed shoulder width within the project limits is 4' in the WB direction and 4' in the EB direction.

- Mandatory Design Exception Feature #2: The curve at PM 10.56 has an existing radius of 325'. In order to meet the standard for curvature a side hill viaduct would need to be constructed. This viaduct will result in significant environmental impacts along the Trinity River, including drilling piles within the Trinity River. The Environmental support function has advised that drilling within the Trinity River at this location would not be permitted. Any increase in curve radii would require a side hill viaduct, therefore no interim improvement is proposed.

- Mandatory Design Exception Feature #3: One 11' lane in each direction. In order to include a 4' shoulder in each direction of the roadway within the project limits it is necessary to built one 11' lane in each direction. Any other solution would require a side hill viaduct, therefore no interim improvement is proposed.

Fact Sheet Exception(s) To Advisory Design Standard(s) includes the following features:

- Advisory Design Exception Feature #1: The proposed clear recovery zone (CRZ) in the EB direction is between 0 and 12 feet within the project limits. Relocating the existing 4 electric power poles to a distance of 20 feet from the edge of traveled way is not feasible since the power poles would be located in a steep unstable slope close to the Trinity River.

- Advisory Design Exception Feature #2: The propose shoulder width is 4 ft in the EB direction and 4 ft in the WB direction. In order to provide the minimum horizontal clearance as stated in section 309.1 (3) (c) wider and longer viaducts would need to be constructed.

Hydraulics Considerations

A floodplain analysis, Floodplain Evaluation Report Summary (FERS) and background hydraulics information was prepared for the project. The 30 year flood, the 50 year and 100 year flood indicates that no flow would flood this section of the roadway.

Traffic Management Plan

A Traffic Management Plan (TMP) was prepared for this project and is included for reference as Attachment G.

Significant traffic impacts are not anticipated provided the recommendations in the TMP are incorporated into the project. It is expected that all construction activities affecting traffic would be performed under one-way reversible traffic control and shoulder closures. One-way traffic control shall be in conformance with the Caltrans Standard Plan T-13, "Traffic Control System for Lane Closure on Two-lane Conventional Highways". The maximum length of a closure is 1,000 ft.

A minimum of one paved traffic lane, not less than 12 ft. wide, with a 2 ft. contiguous paved shoulder, shall be open for use by traffic at all times.

A minimum of one portable changeable message sign (PCMS) in advance of both ends of the construction site shall be required to notify the public of closures associated with this project.

STAA Truck Compatibility

This project was verified to be compatible (adequate space utilizing lane and shoulder) with STAA trucks using MicroStation and AutoTURN software.

12. FUNDING AND SCHEDULE

12A. CAPITAL COST

This PSR recommends a total of $3,732,000 be programmed in a future SHOPP Cycle for Construction Capital and right of way.

12B. CAPITAL SUPPORT

This project is a candidate for the Roadway Protective Betterment Program (201.150) of a future (SHOPP) cycle.

The Hoopa Tribe may be able to contribution funding to this project. Early coordination is recommended to determine if this is an option.

A summary of scheduled costs and resources are shown in the Programming Sheet. (Attachment L).

13. RISK MANAGEMENT PLAN

A Risk Management Plan was prepared for the project. (Attachment M).

14. SCHEDULE

The tentative Project Schedule is shown in the following table:

HQ Milestones	Delivery Date
Begin Environmental Document (ED)	10/1/10
Circulate Draft ED	07/1/12
PA/ED	**10/1/12**
Begin R/W	10/1/12
PS&E	2/1/14
R/W Certification	4/1/14
Ready to List	4/15/14
Approved Construction Contract	8/1/14
Contract Acceptance	10/1/16
Construction End	10/1/17

15. DISTRICT CONTACTS

Name	Title	Phone Number
Juan C. Trupp	Transportation Engineer (Civil)	(707) 445-6458
Jeffrey Pimentel	Project Engineer	(707) 445-6358
Richard Mullen	Project Manager	(707) 441-5877
Ilene Poindexter	Chief, Advance Planning	(707) 441-3969
Royal McCarthy	Program Advisor	(707) 445-6382
Ralph Martinelli	Chief, Traffic Safety	(707) 445-6376
Troy Areseneau	Chief, Traffic Operations	(707) 445-6377
Jaswant Purewall	Senior Environmental Planner	(530) 741-4455
Dana York	Environmental Coordinator	(707) 445-6416
Dave McCanless	Senior Right of Way Agent	(707) 445-6424
Steve Wiman	Structures Advance Planning	(916) 227-8797

16. PROJECT REVIEWS

Field Review; PDT,	Date: Nov. 8, 2008
District Maintenance Dave Bywater	Date: June 16, 2008
HQ Design Coordinator John Steele/Heidi Sykes	Date: May 20, 2009
Project Manager Review	Date: June 15, 2009
Safety Review Steven Hughes	Date: June 21, 2009

17. ATTACHMENTS

A. Project Location Map
B. Typical Sections
C. Project Layout
D. Cost Estimate
E. Preliminary Environmental Assessment Report
F. Right of Way Data Sheet & Utility Information Sheet
G. Transportation Management Plan
H. Storm Water Data Report
I. Landscape Architecture Assessment Sheet
J Initial Site Assessment
K Structure APS
L Programming Sheet
M Risk Management Plan

ATTACHMENT A

PROJECT LOCATION MAP

VICINITY MAP

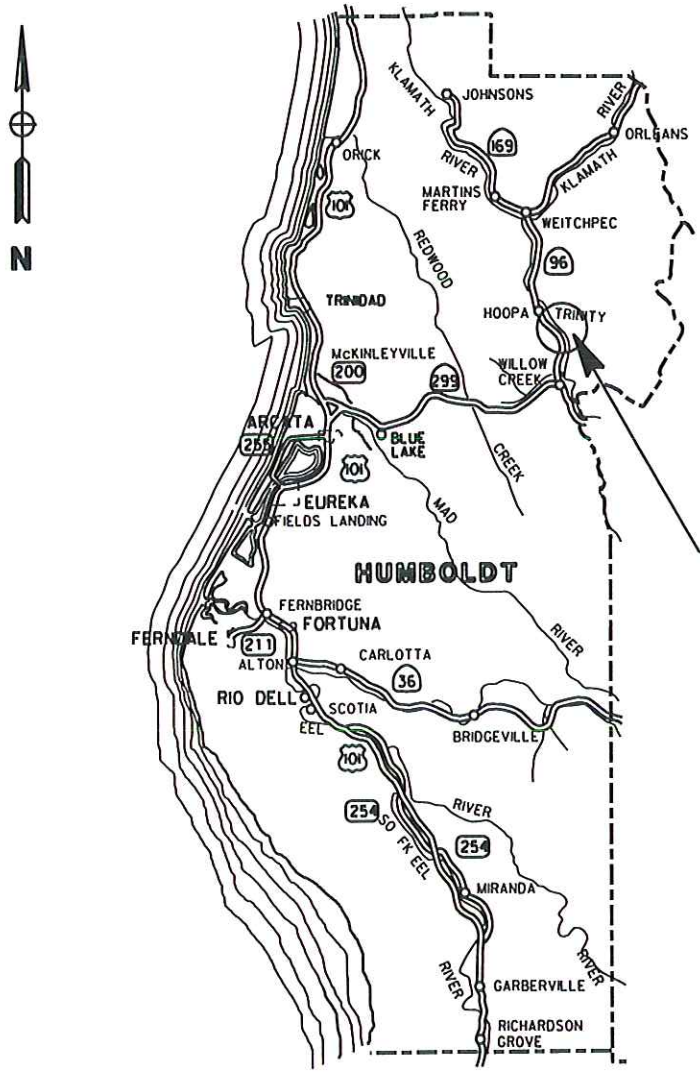

PROJECT LOCATION

No Scale

HOOPA BLUE SLIDE
EA-38490K
HUM-96, 10.5/10.7

DN_HUM 38490K Vic Map.dgn 6/24/2009 8:42:33 AM

ATTACHMENT B

TYPICAL SECTIONS

Dist	COUNTY	ROUTE	POST MILES TOTAL PROJECT	SHEET No.	TOTAL SHEETS
01	HUM	96	PM 10.5/10.7	2	2

REGISTERED CIVIL ENGINEER DATE

PLANS APPROVAL DATE

REGISTERED PROFESSIONAL ENGINEER — No. — Exp. — CIVIL — STATE OF CALIFORNIA

THE STATE OF CALIFORNIA OR ITS OFFICERS OR AGENTS SHALL NOT BE RESPONSIBLE FOR THE ACCURACY OR COMPLETENESS OF SCANNED COPIES OF THIS PLAN SHEET.

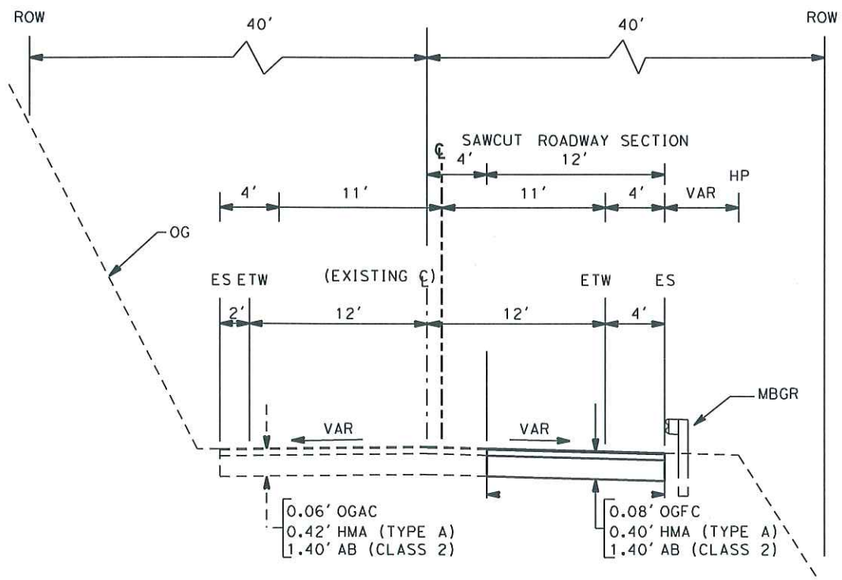

NEW X-SECTION

EXISTING X-SECTION

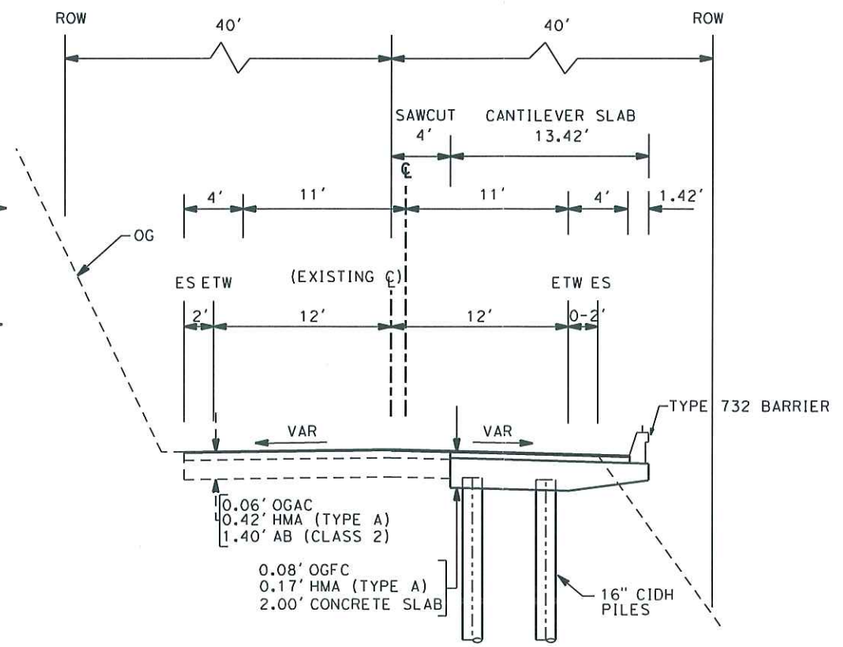

ROAD WIDENING SECTION Sta. 248+00 to Sta. 248+60
Sta. 249+51 to Sta. 251+22
Sta. 252+50 to Sta. 253+80
Sta. 254+60 to Sta. 256+04
Sta. 256+91 to Sta. 257+51

CANTILEVER SLAB SECTION Sta. 248+60 to Sta. 249+51
Sta. 251+22 to Sta. 252+50
Sta. 253+80 to Sta. 254+60
Sta. 256+04 to Sta. 256+91

NO SCALE

ALL DIMENSIONS ARE IN FEET
UNLESS OTHERWISE SHOWN

DESIGN STUDY ONLY

HOOPA BLUE SLIDE
01-HUM-96
PM 10.5/PM 10.7
TYPICAL SECTIONS

REVISED BY | DATE REVISED
CALCULATED-DESIGNED BY | CHECKED BY
FUNCTIONAL SUPERVISOR
STATE OF CALIFORNIA - DEPARTMENT OF TRANSPORTATION
Caltrans
LAST REVISION | DATE PLOTTED => $DATE

a096crossrev7B_sections.dgn 7/20/2009 3:51:47 PM

ATTACHMENT C

PROJECT LAYOUT

Dist	COUNTY	ROUTE	POST MILES TOTAL PROJECT	SHEET No.	TOTAL SHEETS
01	HUM	96	10.5/10.7	1	2

REGISTERED CIVIL ENGINEER DATE

PLANS APPROVAL DATE

THE STATE OF CALIFORNIA OR ITS OFFICERS OR AGENTS SHALL NOT BE RESPONSIBLE FOR THE ACCURACY OR COMPLETENESS OF SCANNED COPIES OF THIS PLAN SHEET.

REGISTERED PROFESSIONAL ENGINEER No. Exp. CIVIL STATE OF CALIFORNIA

NOTES:

1. FOR COMPLETE ROW DATA, SEE ROW RECORD MAPS AT DISTIRCT OFFICE
2. EXACT "BEGIN" AND "END" LOCATIONS OF CONCRETE SLAB AND ROAD WIDENING SECTIONS, SHALL BE DETERMINED DURING DESIGN PHASE

These are conceptual Plans only. All dimensions and and measurments shall be verified for conforming with Highway Design Standards

HOOPA BLUE SLIDE
01-HUM-96
PM 10.5/PM 10.7
LAYOUT

POR PROJECT IDENTIFICATION ONLY

STATE OF CALIFORNIA - DEPARTMENT OF TRANSPORTATION

Caltrans

FUNCTIONAL SUPERVISOR

CALCULATED-DESIGNED BY

CHECKED BY

REVISED BY

DATE REVISED

DATE PLOTTED => $DATE

LAST REVISION

cantileverAPS.dgn 7/20/2009 1:09:18 PM

ATTACHMENT D

COST ESTIMATE

Cost Estimate

01-HUM-96

PM 10.5/10.7

EA: 38490K
Program Code: 201.150

PROJECT DESCRIPTION:

Hoopa Blue Slide

SUMMARY OF PROJECT COST ESTIMATE (YEAR 2009)

TOTAL ROADWAY ITEMS	$1,078,000
TOTAL STRUCTURE ITEMS	$1,585,840
SUBTOTAL CONSTRUCTION COSTS	$2,664,000
TOTAL RIGHT OF WAY ITEMS	$198,250
TOTAL PROJECT CAPITAL OUTLAY COSTS	$2,862,250
CALL	**$2,870,000**

Reviewed by District Program Manager _____ Date _____

Approved by Project Manager _____ Date _____

I. ROADWAY ITEMS

Section 1 Earthwork	Quantity	Unit	Unit Price	Item Cost
Clear and Grubbing	1	LS	$15,000	$15,000
Roadway Excavation	1,000	CY	$46	$46,000
			Subtotal Earthwork	**$61,000**

Section 2 Pavement Structural Section	Quantity	Unit	Unit Price**	Item Cost
OGFC	150	TON	$200	$30,000
Hot Mix Asphalt (Type A)	400	TON	$150	$60,000
Aggregate Base (Class 2)	400	CY	$90	$36,000
Cold Plane AC	200	SQYD	$40	$8,000
			Subtotal Pavement Structural Section	**$134,000**

Section 3 Drainage	Quantity	Unit	Unit Price	Item Cost
Drainage replacement	1	LS	$40,000	$40,000
			Subtotal Pavement Structural Section	**$40,000**

Section 4 Specialty Items	Quantity	Unit	Unit Price	Item Cost
Progress Schedule (Critical Path)	1	LS	$2,000	$2,000
Construction Site Management	1	LS	$62,161	$62,161
Prepare Storm Water Pollution Prevention Plan	1	LS	$6,000	$6,000
Lead Compliance Plan	1	EA	$10,000	$10,000
Transition Railing (Type WB)	8	EA	$5,000	$40,000
Metal Beam Guardrail (MBGR)	290	LF	$35	$10,150
MBGR Terminal Type SRT	2	EA	$4,500	$9,000
Erosion Control	1	LS	$7,000	$7,000
Cable Mesh System	300	SQF	$20	$6,000
Price Index Fluctuations (AC)	1	LS	$16,500	$16,500
Incentive for Asphalt Concrete (QC/QA) (4% of HMAC)	1	LS	$2,400	$2,400
			Subtotal Specialty Items	**$171,211**

Section 5 Traffic Items	Quantity	Unit	Unit Price	Item Cost
Thermoplastic Striping (4")	4,000	LF	$2.25	$9,000
Pavement Marker	50	EA	$20.00	$1,000
Portable Changeable Message Sign (PCMS)	2	EA	$5,000	$10,000
Temporary Railing (Type K)	1,000	LF	$50	$50,000
Temporary Signal System	1	LS	$150,000	$150,000
Temporary Crash Cushion Module	2	EA	$750	$1,500
Construction Area Signs	1	LS	$10,000	$10,000
			Subtotal Traffic Items	**$231,500**
Traffic Additions (Added in "TOTAL SECTIONS 1 thru 5)				**$637,711**
Traffic Control System	1	LS	(4% Item Subtotal)	$25,508
Maintain Traffic	1	LS	(6% Item Subtotal)	$38,263

		SUBTOTAL
	TOTAL SECTIONS 1 thru 5	$701,482

Section 6 Minor Items				
	$701,482		5%	$35,074
			TOTAL MINOR ITEMS	$35,074
	(Subtotal Sections 1 thru 6)			$736,556

Section 7 Roadway Mobilization			
		$736,556 x (10%) =	$73,656
	(Subtotal Sections 1 thru 6)		
		TOTAL ROADWAY MOBILIZATION	$73,656

Section 8 Roadway Additions	Quantity	Unit	Unit Price	Item Cost
	Supplemental Work			
			$736,556 x (5%)	$36,828
	(Subtotal Sections 1 thru 6)			
	Contingencies			
			$736,556 x (25%) =	$184,139
	$ Per Hour	Hours Per Day	Work Days	
COZEEP setups @ $100 per Hour Working 10 Hour Da	$100	10	20	$20,000
Construction Office	RE Office ($2200/month)			$26,400
	(Subtotal Sections 1 thru 6)			$736,556
			TOTAL ROADWAY ADDITIONS (Sections 7 & 8)	$341,022

TOTAL ROADWAY ITEMS	$1,078,000

II. STRUCTURES ITEMS		
Location 1		$308,000
Location 2		$283,000
Location 3		$481,000
Location 4		$344,000
Additional cost using Type 80 barrier		$169,840
	SUBTOTAL STRUCTURES ITEMS (Sum of Total Cost for Structures)	**$1,585,840**

Railroad Related Costs:	NA	
	SUBTOTAL RAILROAD ITEMS	**$0**

TOTAL STRUCTURES ITEMS	**$1,585,840**

III. RIGHT OF WAY ITEMS		
A. Acquisition, including excess lands,		$0
B. Mitigation acquisition & credits		$193,750
C. Project Development Permit Fees		$3,500
D. Utility Relocation (State share)		$0
E. Relocation Assistance (RAP)		$0
F. Clearance/Demolition		$0
G. Title and Escrow Fees		$1,000
	TOTAL RIGHT OF WAY ITEMS	**$198,250**

Estimate Prepared By: Juan C. Trupp Phone # 707.445-6458

Estimate Checked By: Sheri Rodriguez Phone # 707-445-6535

ATTACHMENT E

PRELIMINARY ENVIRONMENTAL ASSESSMENT REPORT

Preliminary Environmental Analysis Report

Project Information

District: 01 County: HUM-96-PM 10.48/10.65 EA: 38490K

Project Title: Hoopa Blue Slide

Project Manager: Richard Mullen Phone # 707-441-5877

Project Engineer: Juan Trupp Phone # 707-445-5208

Environmental Branch Chief: Dana York Phone # 707-445-6416

Environmental Coordinator: Steve Croteau Phone # 707-441-5615

Background from the PEAR Handbook

The Preliminary Environmental Analysis Report (PEAR) is intended to be an important part of the Project Initiation Document (PID). The PEAR should provide the initial environmental evaluation of a project and all feasible alternatives before it is programmed in the State Transportation Improvement Program (STIP) or State Highway Operation and Protection Program (SHOPP). Because the environmental process can have a substantial impact on the project alternatives, design, costs, schedule, and delivery, the PEAR should clearly present and discuss the results of preliminary environmental studies in order to identify environmental constraints that may affect design.

The PEAR also is intended to estimate the scope, schedule, and costs associated with completing environmental compliance. The information contained in the PEAR is intended to serve as the foundation for the environmental team to begin studies in the Project Report phase, facilitating early consultation with Federal and State resource agencies.

Project Description

Purpose and Need:

The purpose of the project is to reconstruct the highway shoulder and replace/reconstruct the metal beam guardrail. The project is needed because the highway is experiencing erosion, which has compromised the metal beam guardrail and reduced roadway width.

Description of work:

This project proposes to construct four cantilever slab sections and place a Hot Mixed Asphalt (HMA) overlay with aggregate base sections to provide additional shoulder width in the eastbound direction of State Route 96 between post miles 10.48/10.65. The project would also replace and/or reconstruct metal beam guardrail, and replace four culverts. Concrete barriers would be installed on top of the cantilever sections, and approximately 300 square feet of anchored wire mesh would be installed below one of the cantilevered sections to prevent erosion.

Anticipated Environmental Approval

	CEQA		NEPA
X	Categorical Exemption	X	Categorical Exclusion
	Negative Declaration / focused ND		Finding of No Significant Impact
	Environmental Impact Report		Environmental Impact Statement

The CEQA and NEPA clearance would likely be a Categorical Exemption (CE) and Categorical Exclusion (CE), respectively, unless environmental studies determined the project would have impacts to endangered species, State or federal jurisdictional waters, or on properties protected by Section 4(f) of the Department of Transportation Act or Section 106 of the National Historic Preservation Act. If impacts were identified and unavoidable, a circulated environmental document would be required. The anticipated CE/CE clearance assumes there would be no Rock Slope Protection (RSP) placed within the river, and that no other in-river work would occur.

The anticipated environmental schedule for the project after receipt of a completed Environmental Study Request (ESR) and Permits To Enter (if required) would be nine to 12 months, depending upon current workloads and project priorities. The timeframe is for PA/ED phase only. Approximately 12 additional months would be required to obtain permits.

PSR Summary Statement

State Route 96 travels along the Trinity River, a Federally designated Wild and Scenic River. Several sensitive resources are associated with the river and the surrounding upland area, including State and Federal listed fish, bird, and plant species. Work windows for listed fish and birds may be required.

Anticipated permits and consultation include, U. S. Army Corps of Engineers (404), NOAA-Fisheries; the U.S. Fish and Wildlife Service; the California Department of Fish and Game (1602); Hoopa Tribe Consultation; the Hoopa Tribe (401).

The environmental commitments estimate is $50,000 for revegetation/monitoring, and $50,000 for wetland/riparian impacts. The general time schedule is nine to 12 months to complete a CE/CE, and six to 12 months for permits. The complete PEAR is included as Attachment E.

Special Considerations

Staging areas and locations where shoulder backing would extend into undisturbed areas should be identified as soon as possible so they can be targeted for field surveys early in the process. Plant surveys would be needed during blooming periods to determine the presence of any special status herbaceous plant species.

A variety of federally listed bird species may be found in the project vicinity. If there are any active nests within ¼ mile of the project area, there may be restrictions on construction activities to avoid impacts to identified species. The Migratory Bird Treaty Act protects all migratory birds. Potential impacts to migratory birds would need to be assessed.

The project would have the potential to impact Federal and State listed fish species. All feasible measures would need to be employed in order to avoid impacts to these species.

The project may require coordination and consultation with one or more of the following: local tribal representatives, the U.S. Fish and Wildlife Service, and NOAA-Fisheries. The project may require permits from one or more of the following: the US Army Corps of Engineers, the California Department of Fish and Game, the North Coast Region Water Quality Control Board, and the Hoopa Tribe.

Anticipated Project Mitigation

Tribal monitors may be required during construction.

Mitigation measures may be required for impacts to wetlands or listed fish or bird species. Additional mitigation measures may be necessary if any unanticipated sensitive biological or cultural resources are discovered.

If active nests of Federally listed bird species are identified within ¼ mile of the project limits, a construction work window and/or Section 7 Consultation with the U.S. Fish and Wildlife Service may be required.

Any disturbed areas would need to be revegetated after construction, and erosion control measures would need to be applied to all exposed soil surfaces. Best Management Practices (BMP) would need to be employed to prevent stormwater impacts.

Disclaimer

This report is not an environmental document. Preliminary analysis, determinations, and estimates of mitigation costs are based on a generalized project description provided for this report, and a highly shortened preparation time. The estimates and conclusions provided are approximate and are based on a preliminary estimate of possible effects. This report provides a minimal level of environmental discussion to include in the Project Study Report (PSR), and issues discussed in the PEAR would be reevaluated after submittal of an ESR.

Reviewed by:

Dana York, Environmental Branch Chief — Date: 6/9/09

Richard Mullen, Project Manager — Date: 6-9-09

Environmental Technical Reports or Studies Required

	Study	Document	N/A
Community Impact Study	☐	☐	X
Farmland	☐	☐	X
Section 4(f) Evaluation	☐	☐	X
Visual Resources	☐	☐	X
Water Quality	☐	X	☐
Floodplain Evaluation	☐	X	☐
Noise Study	☐	☐	X
Air Quality Study	☐	☐	X
Paleontology	☐	☐	X
Wild and Scenic River Consistency	☐	X	☐
Cumulative Impacts	☐	☐	X
Cultural			
ASR	☐	X	☐
HRER	☐	☐	X
HPSR	☐	X	☐
Section 106 / SHPO	☐	☐	X
Native American Coordination	☐	X	☐
Other:	☐	☐	☐
Finding of Effect	☐	X	☐
Data Recovery Plan_____	☐	☐	X
Hazardous Waste			
ISA (Additional)	☐	X	☐
PSI	☐	☐	X
Other _____	☐	☐	☐
Biological			
Endangered Species (Federal)	☐	X	☐
Endangered Species (State)	☐	X	☐
Species of Concern (CNPS, USFS, BLM, S, F)	☐	X	☐
Biological Assessment (USFWS, NMFS, State)	☐	X	☐
Wetlands	X	☐	☐
Invasive Species	☐	X	☐
Natural Environment Study	☐	X	☐
NEPA 404 Coordination	☐	☐	X
Other _____	☐	☐	☐
Permits			
401 Permit Coordination	☐	X	☐
404 Permit Coordination	☐	X	☐
1602 Permit Coordination	☐	X	☐
City/County Coastal Permit Coordination	☐	☐	X
State Coastal Permit Coordination	☐	☐	X
NPDES Coordination	☐	X	☐
US Coast Guard (Section 10)	☐	☐	X

Discussion of Technical Review----------EA 01-38490K, HUM 96 PM 10.48/10.65

Socio-economic and Community Effects. The project is not anticipated to affect community resources.

Farmlands. The project is not anticipated to affect any farmlands.

4(f) Impacts. It is not likely that the project would have impacts to 4(f) properties.

Visual Effects. Given the nature of the project, visual impacts would not be anticipated. Coordination with a Landscape Architect would be required to determine the appropriate concrete barrier type.

Water Quality and Erosion. Water quality and erosion control would be considerations throughout the project limits. The project would be evaluated for potential water quality impacts, and compliance with National Pollutant Discharge Elimination System (NPDES) requirements. If the project would create more than 1 acre of disturbed soil, a SWPPP would be required. It may be necessary to develop an erosion control plan during permitting or consultations to satisfy resource agency requirements.

Floodplain. Floodplain impacts would not be anticipated.

Air and Noise. Air quality impacts from the project would need to be documented, but should be minimal and limited to temporary construction impacts. There is, however, the potential for construction noise to impact listed species. If work activities occur near listed species there could be some limitations placed on dates and time of construction. Night work could require some mitigation for sensitive receptors.

Wild and Scenic River. The project is located within a designated Wild and Scenic River. Consultation with State and Federal agencies would be required.

Cultural Resources. Cultural resource studies would be necessary for the project area. Mapping would need to include all access roads, work areas, staging areas and disposal sites, as well as existing and proposed rights of way.

Native American Coordination. Consultation and coordination with local tribal representatives would be required, and tribal monitors could be required at some locations during construction.

Hazardous Waste/Materials. An Initial Site Assessment (ISA) would be required to address the potential for hazardous waste issues.

Biological Resources. Several State and Federal listed species occur within the project limits, including four endangered fish species. Activities that may impact the river or any listed species would require informal consultation to determine if there is a need for Section 7 Formal Consultation.

Wetlands. A delineation of jurisdictional wetlands and waters of the United States may be required within the environmental study limits. Executive Order 11990 requires an avoidance alternative analysis for wetland impacts unless there is no practicable alternative available.

Invasive Pest Plant Species. Executive Order 13112 states that no federal action may cause or promote the spread or introduction of invasive species. Standard measures need to be taken in design and construction to minimize the likelihood of violating this executive order.

Right-of-Way Relocation or Staging Area. No permanent additional right of way is anticipated at this time. If additional areas for equipment storage or staging are proposed, or if disposal of excess dirt or other debris is necessary, these issues should be identified early in the process because they would require the same level of environmental analysis as the other project components.

Mitigation. Mitigation would be required for any temporary or permanent impacts to water or biological resources. Mitigation may be required for vegetation removal, bird or fish impacts, and cultural resource impacts. There could also be construction work windows due to impacts to sensitive or listed species. Any disturbed areas would need to be revegetated after construction, and erosion control measures applied to all exposed soil surfaces. Noise impacts from night work may require mitigation.

Permits. Permits or consultations may be required from: the U. S. Army Corps of Engineers (404), NOAA-Fisheries; the U.S. Fish and Wildlife Service; the California Department of Fish and Game (1602); the Hoopa Tribe (401).

Coastal Zone. The project is not located within the coastal zone.

Mitigation and Compliance Cost Estimate

Dist.-Co.-Rte.-PM: 01-HUM-96 PM 10.48/10.65 **EA**: 01-38490K
Project Description: Hoopa Blue Slide
Project Cost: $2.2 million
Person completing form/Dist. Branch: Steve Croteau
Project Manager: Richard Mullen **Phone number**: 707-441-5877
Date: May 20, 2009

	Mitigation			Compliance
	Project Feature[1]	**Enviro. Obligation**[2]	**Statutory Require.**[3]	**Permit & Agreement**[4]
Fish & Game 1601 Agreement	0	0	0	$1,000
Coastal Development Permit	0	0	0	
State Lands Agreement	0	0	0	
NPDES/WDR Permit	0	0	0	$500
COE 404 Permit- Nationwide	0	0	0	0
COE 404 Permit- Individual	0	0	0	0
COE Section 10 Permit	0	0	0	0
COE Section 9 Permit	0	0	0	0
Water Quality 401	0	0	0	$2,000
U.S. Coast Guard	0	0	0	0
Special landscaping: • planting • monitoring	0	 $25,000 $25,000	0	0
Archaeological	0	0	0	0
Biological:	0	0	0	0
Historical	0	0	0	0
Community Impacts--Campsites	0	0	0	0
Wetland/riparian:	0	$50,000	0	0
County Encroachment Permit	0	0	0	0
TOTAL (Enter zeros if no cost) Total mitigation and revegetation cost is not expected to exceed $100,000.	0	$100,000	0	$3,500

- Costs are to include all costs to complete the commitment including: cost of right-of-way or easements; long-term monitoring and reporting, and; any follow-up maintenance.
- **A copy of the completed form is to be included in the project approval report (Project Report/PSSR), and a copy sent to Headquarters Environmental Program, attention: John Hebner**.

[1] **PROJECT FEATURE**: Usual mitigation Caltrans performs, whether or not any permit or environmental agreement is required.

[2] **ENVIRONMENTAL OBLIGATION**: Mitigation required by the conditions of a permit or environmental agreement.

[3] **STATUTORY REQUIREMENT:** Mitigation that is required by law (that is not otherwise required by a permit or environmental agreement).

[4] **PERMIT & AGREEMENT:** Other action Caltrans must take as required by the conditions of a permit or environmental agreement.

EA: 38490K Unit: 03-179

Description: Hoopa Blue Slide, HUM 96 PM 10.48/10.65

WBS Task Activity Code	Senior	Coord	Biology	Cultural	Haz Waste	Storm Water	Noise/Air	Sup Svcs	Total
Assigned Unit									
Project Management									
100.05.05 – Proj. Init. & Plng.									-
100.05.10 – PID Exec. & Ctrl.									-
100.05.15 – PID Closeout									-
100.10.05 – PA&ED Init. & Plng.									-
100.10.10 – PA&ED Exec. & Ctrl.									-
100.10.15 – PA&ED Closeout									-
100.10.20 – Project Shelving (PA&ED)									-
100.10.25 – Project Unshelving (PA&ED)									-
100.10.30 – Prep/Updt Admin Record PA&ED									-
100.15.05 – PS&E Init. & Plng.									-
100.15.10 – PS&E Exec. & Ctrl.									-
100.15.15 – PS&E Closeout									-
100.15.20 – Project Shelving (PS&E)									-
100.15.25 – Project Unshelving (PS&E)									-
100.15.30 – Prep/Update Admin Record PS&E									-
100.20.05 – Const. Init. & Plng.									-
100.20.10 – Const. Exec. & Ctrl.									-
100.20.15 – Const. Closeout									-
100.20.20 – Project Shelving (Construction)									-
100.20.25 – Project Unshelving (Construction)									-
100.20.30 – Prep/Update Admin Record Const									-
100.25.05 – RW Init. & Plng.									-
100.25.10 – RW Exec. & Ctrl.									-
100.25.15 – RW Closeout									-
100.25.20 – Project Shelving (Right of Way)									-
100.25.25 – Project Unshelving (Right of Way)									-
100.25.30 – Prep/Update Admin Record RW									-
Total Project Management	-	-	-	-	-	-	-	-	-
Perform Preliminary Engineering Studies and Prepare Draft Project Report									
160.05.05 – Review Approved PID	1	1						1	3
160.05.10 – Review Geotechnical Information		1			2				3
160.05.20 – Review Traffic Data & Forecasts									-
160.05.30 – Review Project Scope	1	2	2	2	2	2			11
160.10.20 – Perform Value Analysis									-
160.10.25 – Perform Hydraulics/Hydro Study									-
160.10.30 – Dev Hwy Planting Des Concepts		1	2			-			3
160.15 – Prepare Draft Project Report									-
160.15.25 – Circ, Rev & App Draft PR	1	2	1	1	1	1		1	8
160.30 – Dev ESR	1	8	1	1	1	1			13
Total Perf Pre Eng Studies	4	15	6	4	6	4	-	2	41

WBS Task Activity Code	Senior	Coord	Biology	Cultural	Haz Waste	Storm Water	Noise/Air	Sup Svcs	Total
Perform Environmental Studies and Prepare Draft Environmental Document									
165.05.05 – Rev Project Information	1	2	1	1	1	1	1		8
165.05.10 – Pub & Agency Scoping	1	2							3
165.05.15 – Select Alt for Fut Study	1	2	1	1					5
165.05.20 – Maps for Env Evaluation		2	1	1	1	1	1		7
165.10.05 – Surveys & Map for Study		4	8	20	1	1	-		34
165.10.10 – Obtain Rights of Entry	1	2	-						3
165.10.15 – CIA, Land Use & Growth	1	1	-	-					2
165.10.25 – Noise Study									-
165.10.30 – Air Quality Study	1	1			-		1		3
165.10.35 – Water Quality Studies	1	2	2			8			13
165.10.40 – Energy Studies		1							1
165.10.45 – Sum Geotech Report		1							1
165.10.50 – Site Investigation HW		2			16				18
165.10.65 – Paleontology Study									-
165.15.05 – Biological Assessment	4	4	20		-	-	-		28
165.15.10 – Wetlands Study		4	20						24
165.15.15 – Resource Agency Coord	4	4	20						28
165.15.20 – NES Report	4	4	20						28
165.20.05 – Archaeology Survey		4							4
165.20.05.05 – Perform Archy Survey				8					8
165.20.05.10 – Conduct NA Consultation				8					8
165.20.05.15 – Perform Records Search				8					8
165.20.05.20 – Conduct Field Survey				16					16
165.20.05.25 – Prepare ASR				16					16
165.20.10 – Phase I Archy Studies				-					-
165.20.10.05 – Conduct NA Consultation									-
165.20.10.10 – Prepare Phase I Proposal									-
165.20.10.15 – Conduct Field Investigation									-
165.20.10.20 – Analyze Materials									-
165.20.10.25 – Prepare Report									-
165.20.15 – Phase II Archy Studies									-
165.20.15.05 – Conduct NA Consultation									-
165.20.15.10 – Prepare Phase II Proposal									-
165.20.15.15 – Conduct Field Investigation									-
165.20.15.20 – Analyze Materials									-
165.20.15.25 – Prepare Report									-
165.20.20 – Hist & Architect Studies				2					2
165.20.20.05 – Prepare Prelim APE/SAM				2					2
165.20.20.10 – Prep Hist Res Eval Rpt - Archy									-
165.20.20.15 – Prep Hist Res Eval Rpt - Arct									-
165.20.20.20 – Prepare Bridge Evaluation				-					-
165.20.25 – Cultural Res Comp Docs				-					-
165.20.25.05 – Prepare Final APE Maps				8					8
165.20.25.10 – Perform PRC 5024.5 Consult				8					8
165.20.25.15 – Prep HPSR/Det Elig/HRCR				16					16
165.20.25.20 – Prep Finding of Effect				-					-
165.20.25.25 – Prep Archy Data Recovery Pln									-
165.20.25.30 – Prepare MOA				16					16

WBS Task Activity Code	Senior	Coord	Biology	Cultural	Haz Waste	Storm Water	Noise/Air	Sup Svcs	Total
Perform Environmental Studies and Prepare Draft Environmental Document (Continued)									
165.25.05 – Prepare DED	8	24	2	2	2	2	2	2	44
165.25.10 – 4(f) Evaluation									-
165.25.15 – CE/CE Determination	4	8						1	13
165.25.20 – PEER & Other Reviews	4	8	4	4	4	4	4	2	34
165.25.25 – Obtain Approval to Circ	2	4						2	8
165.25.30 – Perform Env Coordination	4	8	1	1	1	1	1		17
Total Env Studies & Prep DED	41	94	100	138	26	18	10	7	434
Circulate Draft Environmental Document and Select Preferred Project Alternative									
175.05.05 – Master Dist & Inv Lists	-	-							-
175.05.10 – Not Pub Hear & Avail	-	-						-	-
175.05.15 – Pub & Circulate DED		-							-
175.05.20 – Fed Const Det (Coastal)									-
175.10.05 – Need for Pub Hearing	2	4	1	1	1	1		1	11
175.10.10 – Pub Hearing Logistics	2	4						1	7
175.10.15 – Displays for Pub Hearing	1	16	2	2	2	2		-	25
175.10.20 – Not Pub Hear & Avail	1	4							5
175.10.25 – Review Map Displays	1	2	1	1	1	1			7
175.10.30 – Display Pub Hear Maps	2	4	1	1	1	1			10
175.10.35 – Hold Public Hearing	8	8	8	8	8	8	8	8	64
175.10.40 – Dist Rec or Pub Hearing	1	4							5
175.15 – Res to Pub Hear Comments	1	8	1	1	1	1	1	1	15
175.20 – Select Preferred Alternative									-
Total DED & Preferred Alt	19	54	14	14	14	14	9	11	149
Prepare and Approve Project Report and Final Environmental Document									
180.05.10 – Rev & App Project Rep	2	4	1	1	1	1		1	11
180.10.05 – Prep & Approve FED	2	24	1	1	1	1		1	31
180.10.05.10 – Circulate for Review	1	2							3
180.10.05.10 – Rev due to Review Comments		8							8
180.10.05.15 – Section 4(f) Evaluation									-
180.10.05.20 – Findings Report									-
180.10.05.25 – Statement of Overriding Consid									-
180.10.05.30 – Prepare CEQA Certification									-
180.10.05.35 – FHWA and Approval	1	1							2
180.10.05.40 – Section 106 Cons & MOA				8					8
180.10.05.45 – Conduct Section 7 Consult	1	1	20				-		22
180.10.05.50 – Finalize Section 4(f) Statement									-
180.10.05.55 – Prep Floodplain Only PAF									-
180.10.05.60 – Prep Wetlands Only PAF			8						8
180.10.05.65 – Coord Section 404 Permit	1	1	16			8			26
180.10.05.70 – Finalize Mitigation Measures	2	2	24	2		1			31
180.10.10 – Public Dist of FED		2							2
180.10.10.05 – Resp to Comments on FED		2							2
180.15.05 – Prep & App ROD (NEPA)									-
180.15.10 – Prep & File NOD (CEQA)	-	-							-
180.15.20 – Prep/Update Env Commitments	2	8	1	1					12
Total App PR & FED	12	55	71	13	2	11	-	2	166

WBS Task Activity Code	Senior	Coord	Biology	Cultural	Haz Waste	Storm Water	Noise/Air	Sup Svcs	Total
Coordinate Utilities									
200.15 - Utility Conflict Resolution	1	2	2	2				1	8
Total Coordinate Utilities	1	2	2	2	-	-	-	1	8
Obtain Permits, Agreements and Route Adoptions									
205.10.05 – Army Corp Permit (404)	1	1	40			4			46
205.10.10 – USFS Permit									-
205.10.15 – US Coast Guard Permit		-							-
205.10.20 – DFG Permit (1602)	1	1	40			4			46
205.10.25 – Coastal Dev Permit									-
205.10.30 – Loc Agcy Concurrence									-
205.10.40 – Waste Dischg (NPDES)	1	1	1			24			27
205.10.45 – USFWS Approval	1	1	24						26
205.10.50 – RWQCB Permit (401)	1	1	40		4	24			70
205.10.60 – Update Summary of Env Commit		2	1	1					4
205.10.95 – "Other" Permits--NOAA/NMFS	1	2	24	-	-	-			27
205.20.05 – Draft Fwy Agreement									-
205.20.10 – Review Draft Fwy Agree									-
205.20.15 – Prep Final Fwy Agree									-
205.20.20 – Execute Fwy Agreement									-
205.25 – Prep Agreement for Material Sites									-
205.35.05 – Prep & Exc Coop for Env									-
205.40.10 – New Conn & Rte Adopt									-
205.45 – MOU from TERO									-
Total Permits, Agree & Rte	6	9	170	1	4	56	-	-	246
Prepare Draft PS&E									
230.05.45 – Prepare Noise Barrier Plans									-
230.10.05 – Prepare Hwy Planting Plans			8						8
230.10.15 – Prepare Plant List			2						2
230.35.10 – Dev Hwy Planting Specs			4						4
230.35.35 – Dev Water Poll Ctrl Specs			2		-	8			10
230.35.40 – Dev Erosion Control Specs			2		-	8			10
230.30.60 – Rev & Updt Proj Info Draft PS&E	1	1	1						3
Total Prepare Draft PS&E	1	1	19	-	-	16	-	-	37
Mitigate Environmental Impacts and Clean-up Hazardous Waste									
235.05.05 – Hist Structures Mitig									-
235.05.10 – Archy & Cult Mitigation	1	1		4					6
235.05.15 – Biological Mitigation	1	1	4			-	-		6
235.05.20 – Perform Env Mit R/W	1	1	4	4					10
235.05.25 – Paleontology Mitigation									-
235.10.10 – Surveys to Locate HW					4				4
235.10.15 – Conduct Detailed Invest									-
235.15 – Dev HW Management Plan									-
235.20 – Prepare HW PS&E									-
235.25 – Perform HW Clean-up									-
235.30 – Certify Freedom of HW					4				4
235.35 – Long Term Mitigation Mon			-		4				4

WBS Task Activity Code	Senior	Coord	Biology	Cultural	Haz Waste	Storm Water	Noise/Air	Sup Svcs	Total
Mitigate Environmental Impacts and Clean-up Hazardous Waste (Continued)									
235.40 – Update Summary of Env Commit	1	2	1	1					5
Total Mitigation & HW Clean-up	4	5	9	9	12	-	-	-	39
Circulate, Review and Prepare Final District PS&E Package									
255.05 – Circ & Rev Draft Dist PS&E	1	2	1	1	1	1			7
255.10.25 - Update Technical Reports			1	1	1	1			4
255.15 – Env Reevaluation	4	16	8	8	8	8			52
255.20.05 - Rev Plans for Stds Comp									-
255.40 - Prep Res Engs File									-
Total PS&E	5	18	10	10	10	10	-	-	63
Prepare Contract Documents									
260.15.15 - Env Cert at RTL	1	4	1	1	1	1			9
Total Prepare Contract Documents	1	4	1	1	1	1	-	-	9
Perform Construction Engineering and General Contract Administration									
270.20.50 – Technical Support	1	4	4	4	2	2			17
270.50 – Cert of Comp with Mit Req	1	2	4	4	2	2			15
270.55 – Perf Final Inspect & Rec Accept	1	1	1	1	1	1			6
270.70 – Update Summary of Env Commit	1	4	1	1	1	1			9
Total Const Engineering	4	11	10	10	6	6	-	-	47
Prepare and Administer Contract Change Orders									
285.05.05 - Det Need for CCO	1	2	1	1	1	1			7
285.10.95 – Prov Other Func Support	1	2	1	1	1	1			7
Total CCOs	2	4	2	2	2	2	-	-	14
Resolve Contract Claims									
290.35 – Provide Techinical Support	1	2	1	1	1	1			7
Total Contract Claims	1	2	1	1	1	1	-	-	7
Accept Contract, Prepare Final Construction Estimate & Prepare Final Report									
295.35 – Prep Cert of Env Compliance	1	2	1	1	1	1			7
Total Final Construction	1	2	1	1	1	1	-	-	7
Total Project Hours	102	276	416	206	85	140	19	23	1,267

ATTACHMENT F

RIGHT OF WAY DATA SHEET & UTILITY INFORMATION SHEET

STATE OF CALIFORNIA - DEPARTMENT OF TRANSPORTATION

RIGHT OF WAY DATA SHEET

Date: May 21, 2009

01-HUM-96-PM 10.5/10.7
E.A. 384900
Realign Highway in Humboldt County near Hoopa
from 1.1 to 0.9 mile West of Supply Creek Bridge.

1. **Right of Way Cost Estimate:** **Alternate No. 1**

	Current Value Future Use	Escalation Rate	Escalated Value
A. Total Acquisition Cost			
B. Mitigation acquisition & credits	$193,750	5%	$252,794
C. Project Development Permit Fees	$3,500	5%	$4,567
Subtotal	$197,250		$257,361
D. Utility Relocation (State Share) (Owner's share:)			
E. Relocation Assistance (RAP)			
F. Clearance/Demolition			
H. Title & Escrow	$1,000	5%	$1,305
I. Total Estimated Right of Way Cost	$198,250	Rounded	$259,000
J. Construction Contract Work			

2. **Current Date of Right of Way Certification** November 1, 2014

3. **Parcel Data:**

Type		Dual/Appr	Utilities	
X			U4 - 1	
A			- 2	
B	1		- 3	
C			- 4	
D			U5 - 7	5
			- 8	
Total	1		- 9	

Areas:

R/W: N/A
Excess: N/A
Mitigation: 0.75 Ac.

No. Excess Pcls:

RR Involvements	
None	X
C&M Agrmt	
Svc Contract	
Easements	
Rights of Entry	
Clauses	

Misc. R/W Work	
RAP Displ	N/A
Clear/Demo	N/A
Const Permits	N/A
Condemnation	
USA Involvement	No

4. Are there any major items of construction contract work?
Yes _____ No X

5. Provide a general description of the right of way and excess lands required (zoning, use, major improvements, critical or sensitive parcels, etc.).

6. Are any properties acquired for this project expected to be rented, leased, or sold?
Yes _____ No X

7. Is there an effect on assessed valuation? Yes _____ Not Significant _____
No X

8. Are utility facilities or rights of way affected? Yes X No _____

Utility relocations are not anticipated; however, utility verifications will be required.

9. Are railroad facilities or rights of way affected? Yes _____ No X

10. Were any previously unidentified sites with hazardous waste and/or material found?
Yes _____ None Evident X

11. Are RAP displacements required? Yes _____ No X

No. of single family _____ No. of business/nonprofit _____
No. of multi-family _____ No. of farms _____

Based on Draft/Final Relocation Impact Statement/Study dated N/A
it is anticipated that sufficient replacement housing (will/will not) be available without Last Resort Housing.

12. Are there material borrow and/or disposal sites required?
Yes _____ No X

13. Are there potential relinquishments and/or abandonments?
Yes _____ No X

14. Are there any existing and/or potential airspace sites?
Yes _____ No X

15. What type of mitigation is required for the project?
Riparian

16. Indicate the anticipated Right of Way schedule and lead time requirements. (Discuss if district proposes less than PMCS lead time and/or if significant pressures for project advancement are anticipated.)

Right of Way Lead Time will require a minimum of 15 months after we receive first appraisal maps, utility conflict maps, and the necessary environmental clearance and freeway agreements have been approved and obtained. Additionally a minimum of 12 months will be required after receiving the last appraisal map to Right of way for certification.

17. Is it anticipated that Caltrans will perform all Right of Way work?
Yes X No ____

Evaluation Prepared By:

Right of Way: _____ Date 5/21/09
JEREMIAH JOYNER

Reviewed By:

RW Project Coordinator: _____ Date 5/28/09
AUDREY OAKLEY

I have personally reviewed this Right of Way Data Sheet and all supporting information. I certify that the probable Highest and Best Use, estimated values, escalation rates, and assumptions are reasonable and proper, subject to the limiting conditions set forth, and I find this Data Sheet to be complete and current.

RECOMMENDED FOR APPROVAL

_____
DAVE McCANLESS,
Senior Right of Way Agent
Project Delivery Branch
EUREKA

5/22/09
Date

APPROVED:

_____
WALTER E. BIRD,
North Region Right of Way Manager
Eureka/Redding

5/29/09
Date

STATE OF CALIFORNIA - DEPARTMENT OF TRANSPORTATION
UTILITY INFORMATION SHEET

E.A. 384900
01-HUM-96-PM 10.5/10.7
Alt No. 1

1. **Name of Utility Companies Requiring Verification Only:**
   Hoopa Valley Public Utilities District - Willow Creek Community Services District
   PG&E - Electric
   PG&E - Gas
   Verizon

2. **Name of Utility Companies Requiring Relocations:**
   None

   Number of JUA's or CCUA's required for this project:
   None

3. **Additional information concerning utility involvements on this project:**

4. **PMCS Input Information**
   Total estimated cost of State's obligation for utility relocation on this project:

   Potholing: $_____

   Relocation $_____

   Total: $_____ **Escalation Rate** 5 %.

   (Owner's Share: $_____)

Utility Involvements

U4-1		U5-7	5
-2		-8	
-3		-9	
-4			

Prepared By:
Dan Kaiser
Dan Kaiser
Right of Way Utility Estimator

5/21/09
Date

STATE OF CALIFORNIA - DEPARTMENT OF TRANSPORTATION

MITIGATION INFORMATION SHEET

E.A. 384900

01-HUM-96-PM 10.5/10.7

1. **Is mitigation required for the project?**
   Possibly. Per Steven Croteau (707) 441-5615

2. **What type of mitigation is needed for the project?**
   Riparian

3. **List any Resource Agency that will be involved with mitigation.**
   Not known at this time

4. **What is the method of Mitigation?**

   Number of fee acquisition parcels, Conservation Easements, and/or Option agmts required: 1

   Mitigation Bank: (yes/no) No

   In-lieu payment: (yes/no) No

   Other: (describe) _____

5. **PMCS Input Information**

   Number of Acres/Credits 0.75

   Estimated Cost $193,750

   Prepared By:

   _____

   Right of Way Mitigation Estimator

ATTACHMENT G

TRANSPORTATION MANAGEMENT PLAN

State of California Business, Transportation and Housing Agency

TRANSPORTATION MANAGEMENT PLAN

To: Juan Trupp
Project Engineer

Date: 18 June 2009
File: HUM-96 PM 10.48/10.65
EA: 01-38490K
Hoopa Blue Slide

From: Troy Arseneau, Chief
District 1 Office of Traffic Operations

Project Information

Location:	In Humboldt County near Hoopa from 1.1 to 0.9 miles west of Supply Creek Bridge.	
Type of Work:	Replace/reconstruct MBGR, shoulder widening.	
Anticipated Traffic Control:	One-way reversible traffic control. Shoulder closure.	
Estimated Maximum Delay:	5 minutes.	
Peak Hour Traffic Volumes:	370 vph.	
Lane Requirement Charts Included:	No.	
Number of Working Days:	190 days.	
Next Major Milestone and Date:	PSR - July/2009	
RTL Date:	November/2014	
District Traffic Manager/ TMP Manager:	Troy Arseneau	(707) 445-6377
TMP Coordinator:	Paul Hailey	(707) 445-5213

Anticipated Traffic Impacts

Significant traffic impacts are not anticipated provided that the following recommendations are incorporated into the project. In conformance with Deputy Directive-60, District Lane Closure Review Committee approval is not required for projects with anticipated traffic delay less than 30 minutes.

Recommendation

A request for an updated Transportation Management Plan shall be made during the design phase.

Hours of Work

- The full width of the traveled way shall be open for use by public traffic on Saturdays, Sundays, designated legal holidays and the day preceding designated legal holidays, after 3:00 p.m. on Fridays, and when construction operations are not actively in progress. If a legal holiday falls on a Monday the full width of the traveled way shall be open on the preceding Friday.

Public Notice

- Upon receipt of notice that the roadway width (including paved shoulder) for a direction of travel will be narrowed to less than 16 ft, the Resident Engineer shall promptly notify the District Permits Engineer.

- The District Public Information Office, (707) 445-6444, shall be contacted two weeks in advance of the start of construction.

- Any emergency service agency whose ability to respond to incidents will be affected by any lane closure must be notified prior to that closure.

- Impacts to reservation land during the construction phase shall be coordinated with the affected local tribal government and other entities during the design phase. Contact Kathleen Sartorius, District 1 Native American Liaison, (707) 441-5815

- Work shall be coordinated with the local busing system (including school buses and public systems) to minimize impact on their bus schedules.

- Include in a memo to the Resident Engineer that at least 5 days in advance of excavation work in the vicinity of possible Caltrans facilities, that Maintenance-Electrical Supervisor (825-0233) shall be contacted to locate existing Caltrans underground electrical facilities.

Traffic Control

- One closure is permitted within the project limits.

- One-way traffic control shall be in conformance with the Caltrans Standard Plan T-13, "TRAFFIC CONTROL SYSTEM FOR LANE CLOSURE ON TWO LANE CONVENTIONAL HIGHWAYS."

    - A minimum of 14 ft of paved roadway shall be open for use by public traffic.

  - In the event the design calls for the roadway to be reduced to less than 14 feet of paved width, a memo requesting an updated TMP with the reasoning for the change of the lane width restriction shall be submitted to District 1 Traffic Operations.

  - The maximum length of one-way traffic control closure is 1000 ft.

  - During one-way traffic control, additional advance flaggers will be required. All flaggers shall have continuous radio contact with personnel in the work area.

  - "Watch for Bicycles" signs shall be placed, in each direction of travel, prior to the construction zone.

- A shoulder closure consisting of at least one Shoulder Work Ahead advance warning sign and channelizing devices shall be used when work occurs within 6 ft of the edge of traveled way. Channelizing devices shall be placed 200 ft in advance of, and adjacent to the work zone with a maximum distance of 50 ft between channelizers.

- A minimum of one PCMS in advance of both ends of the construction site shall be required in order to notify the public of the closures related to this project.

- Access to side roads and residences shall be maintained at all times. When work or traffic queues extend through an intersection, additional traffic control will be required at the intersection.

- Pedestrian detours shall be required when sidewalks are not available for public travel and shall be in conformance with "Figure 6H-28. Sidewalk Detour or Diversion (TA-28)" in the September 26, 2006 CA MUTCD for Streets and Highways (Pg. 6H-68/69).

- If persons with disabilities (e.g. hearing, visual, or mobility) are found to use this facility, the temporary traffic control measures mentioned in the California MUTCD Chapter 6D shall be incorporated to accommodate disabled pedestrians through the work zone.

Contingency Plan

The contractor shall prepare a contingency plan for reopening closures to public traffic. The Contractor shall submit the contingency plan for a given operation to the Engineer within one working day of the Engineer's request. Contingencies for unanticipated delays, emergencies, etc. shall be coordinated between the RE and the Contractor.

Approval

Approved by: _____
Transportation Management Plan Coordinator

Approved by: _____
District Traffic/ TMP Manager

TAA/pwh

CC: 1)TAArseneau, 2)JCandalot
1)RMMartinelli, 2) NBraafladt, 3)MGDavenport
IPoindexter
RMullen
HLQuintrell
RLingford
AJones

ATTACHMENT H

STORM WATER DATA REPORT

Short Form - Storm Water Data Report

Dist-County-Route: 01-HUM-96

Post Mile (Kilometer Post) Limits: PM 10.48/10.65

Project Type: Roadway betterment

EA: 01-38490K

RU: 01-216

Program Identification: 20.10.201.150

Phase: ☒PID ☐PA/ED ☐PS&E

Regional Water Quality Control Board(s): North Cost RWQCB

1. Is the project required to consider incorporating Treatment BMPs?	☐Yes	☒No
2. Does the project disturb more than 0.25 acres of soil?	☐Yes	☒No
3. Is the project part of a Common Plan of Development?	☐Yes	☒No
4. Does the project potentially create permanent water quality impacts?	☐Yes	☒No
5. Does the project require a notification of ADL reuse?	☐Yes	☒No

If the answer to any of the preceding questions is "Yes", prepare a Long Form - Storm Water Data Report.

Estimated Construction Start Date: 06/01/13 Construction Completion Date: 10/01/13

Separate Dewatering Permit (if Yes, permit number) ☐Yes Permit #:_____ ☒No

This Short Form – Storm Water Data Report has been prepared under the direction of the following Licensed Person. The Licensed Person attests to the technical information contained herein and the data upon which recommendations, conclusions, and decisions are based. Professional Engineer or Landscape Architect stamp required at PS&E.

Jeffrey Pimentel, *Registered Project Engineer/Landscape Architect* 6/2/09 Date

I have reviewed the storm water quality design issues and find this report to be complete, current, and accurate:

STAMP
[Required for PS&E only]

Ted Schultz, *District/Regional SW Coordinator or Designee* 5-28-09 Date

1. Project Description

- The California Department of Transportation (Caltrans) is proposing to construct four eastbound concrete cantilever slab sections to provide additional shoulder width in the eastbound direction along Route 96 in Humboldt County between PM 10.48 and PM 10.65 near the town of Hoopa. The scope of work of this roadway protective betterment project will provide additional shoulder width, culvert replacement and replace and/or reconstruct the existing metal beam guardrail. The concrete slab section locations are:
  - Section 1, from Sta. 256+04 to Sta. 256+91, structure total length 87 feet
  - Section 2, from Sta. 253+80 to Sta. 254+60, structure total length 80 feet
  - Section 3, from Sta. 251+22 to Sta. 252+50, structure total length 128 feet
  - Section 4, from Sta. 248+60 to Sta. 249+51, structure total length 91 feet
- The project will cause minimal soil disturbance incidental to excavate for the concrete cantilever sections and new pavement structural section. Disturbed soil is anticipated to be less than 0.2 acre, including construction staging area.
- The Hoopa meteorological station was used to gather information to create the corresponding climate summary tables and the intensity of these events.
- Soil disturbance activities shall comply with requirements of the Hoopa Valley Indian Reservation Water Quality Control Plan prepared by the Hoopa Valley Tribal Environmental Protection Agency (TEPA). Work is in close proximity of the Trinity River. USEPA has established a technical TMDL for Sediment for the Trinity River.
- This project will result in a total 0.08 acres increase in impervious area. The new shoulder area is 4' wide by 500' long.

2. Construction Site BMPs

- Due to the minimal soil disturbance (<1 acre), required during the construction phase the contractor will have to prepare and implement a Water Pollution Control plan (WPCP). The WPCP will include temporary construction BMP's as a means of controlling storm water runoff that may occur during construction activities in different locations.

REQUIRED ATTACHEMENTS

- Vicinity Map
- Evaluation Documentation Form
- Construction Site BMP Consideration Form (required at PS&E only)

VICINITY MAP

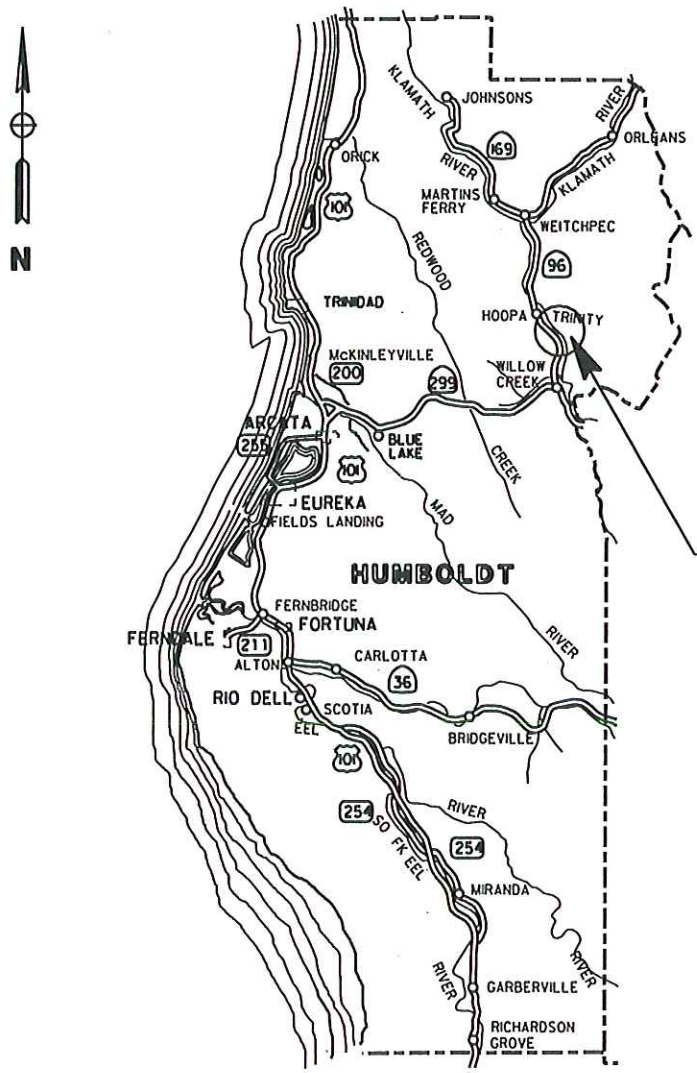

PROJECT LOCATION

No Scale

HOOPA BLUE SLIDE
EA-38490K
HUM-96, 10.48/10.65

DN_HUM 38490K Vic Map.dgn 1/21/2009 2:42:35 PM

DATE: 5/18/2009

See Figure 4-1, Project Evaluation Process for Consideration of Permanent Treatment BMPS EA: 01-38490K

NO.	CRITERIA	YES	NO	SUPPLEMENTAL INFORMATION FOR EVALUATION
1.	Begin Project Evaluation regarding requirement for consideration of Treatment BMPs	☒		Go to 2
2.	Is this an emergency project?	☐	☒	If **Yes**, go to 11. If **No**, continue to 3.
3.	Have TMDLs or other Pollution Control Requirements been established for surface waters within the project limits? Information provided in the water quality assessment or equivalent document.	☒	☐	If **Yes**, contact the District/Regional NPDES Coordinator to discuss the Department's obligations under the TMDL (if Applicable) or Pollution Control Requirements, go to 10 or 4. _____ *(Dist./Reg. SW Coordinator initials)* If **No**, continue to 4.
4.	Is the project located within an area of a local MS4 Permittee?	☐	☒	If **Yes**. (*Co.*), go to 5. If **No**, document in SWDR go to 5.
5.	Is the project directly or indirectly discharging to surface waters?	☒	☐	If **Yes**, continue to 6. If **No**, go to 11.
6.	Is this a new facility or major reconstruction?	☐	☒	If **Yes**, continue to 8. If **No**, go to 7.
7.	Will there be a change in line/grade or hydraulic capacity?	☒	☐	If **Yes**, continue to 8. If **No**, go to 11.
8.	Does the project result in a net increase of one acre or more of new impervious surface?	☐	☒	If **Yes**, continue to 10. If **No**, go to 9. _____ *Acres (Net Increase New Impervious Surface)*
9.	Is the project part of a Common Plan of Development?	☐	☒	If **Yes**, continue to 10. If **No**, go to 11.
10.	Project is required to consider approved Treatment BMPs.	☐	See Sections 2.4 and either Section 5.5 or 6.5 for BMP Evaluation and Selection Process. Complete Checklist T-1 in this Appendix E.	
11.	Project is not required to consider Treatment BMPs. TS *(Dist./Reg. SW Coord. Initials)* _____ *(Project Engineer Initials)* 5-28-09 *(Date)*	☒	Document for Project Files by completing this form, and attaching it to the SWDR.	

DATE: 5-18-09

Project Evaluation Process for the Consideration of Construction Site BMPs EA: 01-38490K

NO.	CRITERIA	YES	NO	SUPPLEMENTAL INFORMATION
1.	Will construction of the project result in areas of disturbed soil as defined by the Project Planning and Design Guide (PPDG)?	☒	☐	If **Yes**, Construction Site BMPs for Soil Stabilization (SS) will be required. Complete CS-1, Part 1. Continue to 2. If **No**, Continue to 3.
2.	Is there a potential for disturbed soil areas within the project to discharge to storm drain inlets, drainage ditches, areas outside the right of way, etc?	☒	☐	If **Yes**, Construction Site BMPs for Sediment Control (SC) will be required. Complete CS-1, Part 2. Continue to 3.
3.	Is there a potential for sediment or construction related materials and wastes to be tracked offsite and deposited on private or public paved roads by construction vehicles and equipment?	☒	☐	If **Yes**, Construction Site BMPs for Tracking Control (TC) will be required. Complete CS-1, Part 3. Continue to 4.
4.	Is there a potential for wind to transport soil and dust offsite during the period of construction?	☐	☒	If **Yes**, Construction Site BMPs for Wind Erosion Control (WE) will be required. Complete CS-1, Part 4. Continue to 5.
5.	Is dewatering anticipated or will construction activities occur within or adjacent to a live channel or stream?	☒	☐	If **Yes**, Construction Site BMPs for Non-Storm Water Management (NS) will be required. Complete CS-1, Part 5. Continue to 6.
6.	Will construction include saw-cutting, grinding, drilling, concrete or mortar mixing, hydro-demolition, blasting, sandblasting, painting, paving, or other activities that produce residues?	☒	☐	If **Yes**, Construction Site BMPs for Non-Storm Water Management (NS) will be required. Complete CS-1, Part 5. Continue to 7.
7.	Are stockpiles of soil, construction related materials, and/or wastes anticipated?	☒	☐	If **Yes**, Construction Site BMPs for Waste Management and Materials Pollution Control (WM) will be required. Complete CS-1, Part 6. Continue to 8.
8.	Is there a potential for construction related materials and wastes to have direct contact with precipitation; storm water run-on, or stormwater runoff; be dispersed by wind; be dumped and/or spilled into storm drain systems?	☒	☐	If **Yes**, Construction Site BMPs for Waste Management and Materials Pollution Control (WM) will be required. Complete CS-1, Part 6. Continue to 9.
9.	End of checklist.	☒	Document for Project Files by completing this form, and attaching it to the SWDR.	

PE to initialize after concurrence with Construction (PS&E only) *Date*

ATTACHMENT I

LANDSCAPE ARCHITECTURE ASSESSMENT SHEET

NORTH REGION
LANDSCAPE ARCHITECTURE ASSESSMENT SHEET
03-LAND-0002 (Rev. 3/03)

TO: Juan Trupp **FROM:** Laura Lazzarotto **Unit/Senior TE Name:** Adv. Planning/ Ilene Poindexter **Project Manager:** Richard Mullen	**CO:** HUM **DISTRICT:** 01 **DATE:** May 15, 2009 **EA:** 01-38490K	**RTE:** 96	**PM:** 10.48/10.65	

PROJECT SEPARATION:
☒ Landscape as part of roadway work EA
☐ Landscape under separate EA (Follow-up)

PROJECT: Hoopa Blue Slide

TYPE: SHOPP

PROJECT MILESTONE: PID

PROJECT DESCRIPTION: The purpose of this project is to replaceand/or reconstruct the existing metal beam guard rail (MBGR) and to provide additional shoulder width in the eastbound direction. In order to provide additional shoulder width, four concrete slab cantilever sections will be constructed at the following locations.

AREA (FT2) FOR HIGHWAY PLANTING: N/A
AREA (FT2) FOR EROSION CONTROL 7000 SQ FT
PLANT COUNT FOR MITIGATION PLANTING Not determined at this time

LANDSCAPE FREEWAY STATUS: ☐ Yes ☒ No
HIGHWAY PLANTING IS: ☐ Warranted ☒ Not Warranted
SCENIC HIGHWAY STATUS: ☒ Officially Designated Big Foot Scenic Byway ☐ Eligible Forest Service ☐ Not Designated
REVEGETATION REQUIRED: ☐ Permit Required ☐ Offset of Visual Impact ☐ Other (Forest Service, BLM, etc.)

BIOLOGIST CONTACT: Steve Croteau
DATE OF CONTACT: 5/14/09
REVEG. SPECIALIST CONTACT: Clare Golec

ADJACENCY TO BILLBOARDS:
☐ Project area is adjacent to outdoor advertising. ☒ Project area is not adjacent to outdoor advertising.

WATER AND POWER AVAILABILITY: N/A

IS THERE (E) IRRIGATION THAT WILL BE IMPACTED BY THIS PROJECT: ☐ Yes ☒ No

DESIGN FOR MAINTENANCE SAFETY: Yes

CONTEXT SENSITIVITY:
☒ It is determined that the project will involve consideration of highway aesthetics and will require further evaluations pertaining to specific roadside enhancements.

☐ No foreseen issues with highway aesthetics ☒ Other Concrete barrier should include Hoopa motif.

COOPERATIVE MAINTENANCE AGREEMENTS:

Project may Involve additional tasks indicated

☐ Visual Simulation	☒ Erosion Control	☒ SWPPP/NPDES
☐ Highway Planting	☒ Field Visit	☒ Context Sensitive Solutions/Aesthetics
☐ Contour Grading	☒ Cost Estimate	☐ Landscape Evaluation

NORTH REGION
LANDSCAPE ARCHITECTURE ASSESSMENT SHEET
03-LAND-0002 (Rev. 3/03)

COST INFORMATION:	
☐ Highway Planting and Irrigation	
☐ 3 year Plant Establishment	
☐ Revegetation commitments w/ Plant Establishment	
☒ Erosion Control	$ 7,000.00
☐ Slope Protection	
☒ Aesthetic Treatment (Type 80 concrete barrier including Hoopa motif). See Structures estimate.	$ $440 per LF @ 386 ft=$169,840
	TOTAL $ 7,000.00

OTHER RELATED INFORMATION:
☐ Landscape Architecture Resource Estimate:

ROADSIDE VEGETATION MANAGEMENT TREATMENT NEEDS:
☐ Extended Gore Areas
☒ Guardrails and Signs
☐ Medians
☐ Road Edge
☐ Side Slopes/Embankment Slopes
(See: http://www.dot.ca.gov/hq/LandArch/roadside/index.htm for potential treatment measures)

PREPARED BY: Laura Lazzarotto DATE: 5/15/09 CONCURRED BY: _____ (Project Manager) DATE: 5/21/09

APPROVED BY: _____ DATE: 5/20/09
(Landscape Architecture or Engineering Services Branch Chief)

ATTACHMENT J

INITIAL SITE ASSESSMENT

State of California
Department of Transportation

Business, Transportation and Housing Agency

Memorandum

To: Juan C. Trupp, Project Engineer
Advance Planning

Date: May 14, 2009

File No.: 1-HUM-96 PM 10.48/10.65
01-38490K
Hoopa Blue Slide

From: Steve Werner SSW by K. Sick
North Region Office of Environmental Engineering—North

Subject: Initial Site Assessment

An Initial Site Assessment (ISA) for the above-referenced "Hoopa Blue Slide" project was conducted after receiving your request dated January 23, 2009. The ISA was based on the provided unsigned "Design Study" plan sheets, and information provided on the ISA request memorandum and Hazardous Waste Request form.

Based on the information provided, the ISA found that the project likely has only nominal hazardous waste issues related to removing yellow thermoplastic stripe, grinding thermoplastic stripe during cold planing if this occurs, disturbance of shoulder soils that contain Aerially Deposited Lead (ADL), and disposal of Treated Wood Waste (TWW). The lead issues present on the project will necessitate that the contractor prepare a Lead Compliance Plan (LCP). Removed thermoplastic stripe will be hazardous waste, and the TWW will require disposal at a lined landfill, the closest of which is in the Redding area.

For the purposes of determining the appropriate environmental documents required for the project, the work site(s) should not be considered to be on the *Hazardous Waste and Substances Site List (Cortese List)*.

The development of Contract Non-Standard Special Provisions (NSSPs) is necessary for the issues noted above. This office develops and acquires approval from the Headquarters sponsors for those NSSPs. This is done at the Engineer's request when project design is complete. The development and approval process takes a minimum of two weeks, so please allow for this time in project scheduling.

If there are any changes to the scope of the project, please send an e-mail or letter describing the changes so that they may be evaluated for possible

hazardous waste issues that could affect your project. Communications may also be directed to me at (707) 445-6658.

cc: 1-SWerner 2-File

e-mail copies to: Steve Werner, Environmental

SSW/ks

ATTACHMENT K

STRUCTURE APS

STATE OF CALIFORNIA - DEPARTMENT OF TRANSPORTATION - DIVISION OF STRUCTURES

DIST.	COUNTY	ROUTE	POST MILE
01	Hum	96	10.5

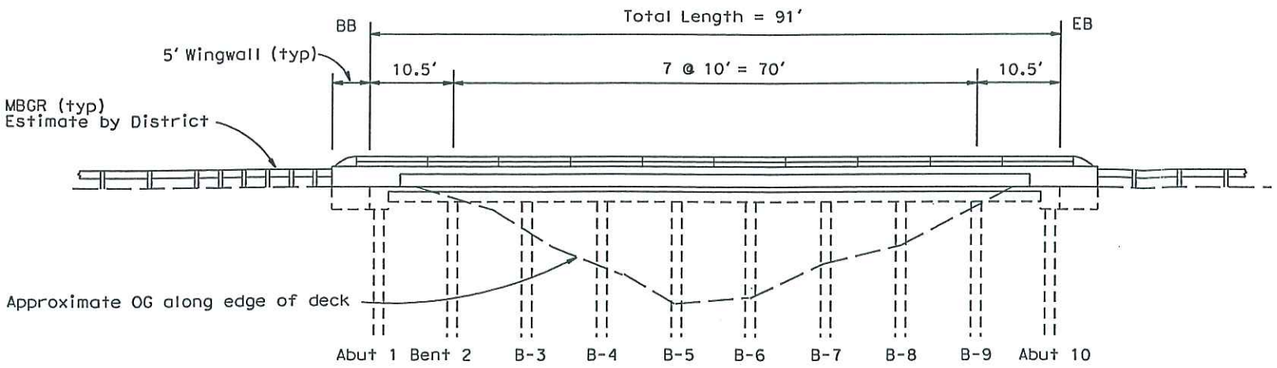

ELEVATION

1"=20'

Location 4 shown, others similar.

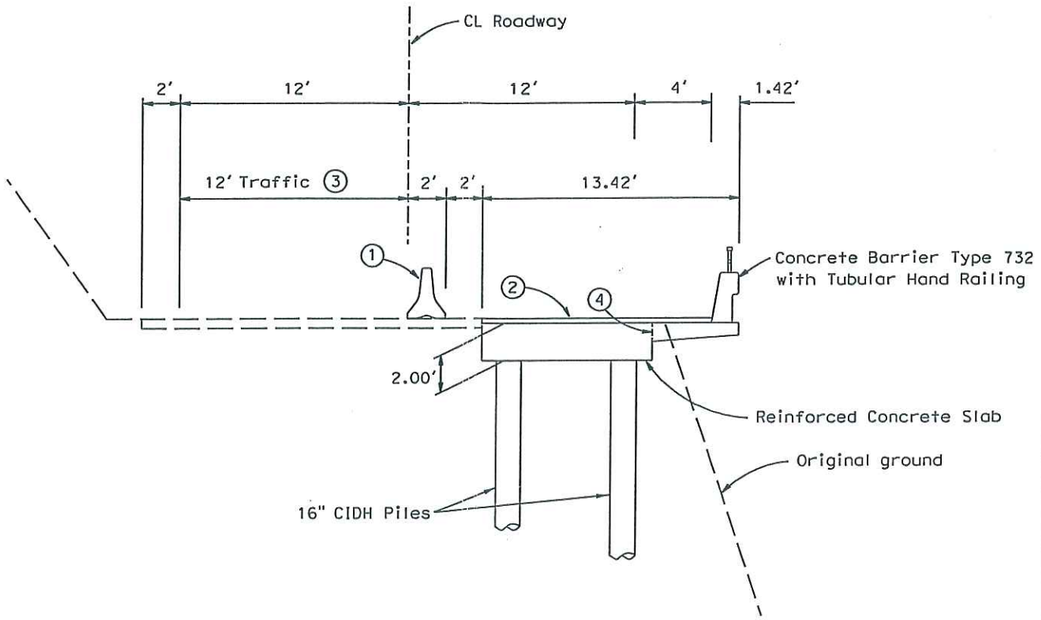

TYPICAL SECTION

1/8"=1'

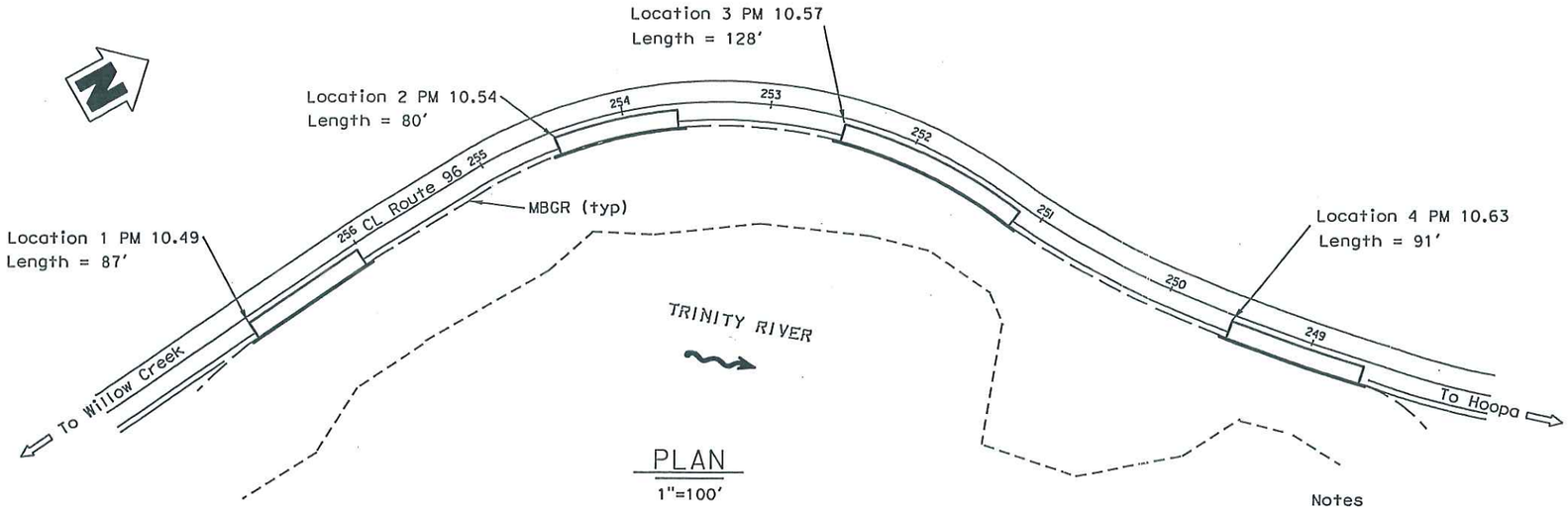

PLAN

1"=100'

Notes

(1) Temporary Railing Type K. Cost estimate by District.

(2) 3" max AC on slab. Cost estimate by District.

(3) One way reversible traffic during construction.

(4) Permissible construction joint to allow deck overhang formwork to be supported from the slab.

No survey available at time of study.

16" CIDH concrete piles assumed for all supports.

DATE OF ESTIMATE 3/23/09

	Location 1	Location 2	Location 3	Location 4
STRUCTURE DEPTH	2.00'	2.00'	2.00'	2.00'
LENGTH	87'	80'	128'	91'
WIDTH	13.42'	13.42'	13.42'	13.42'
AREA	1168 SF	1074 SF	1718 SF	1221 SF
COST/SF INCLUDING 10% MOBILIZATION & 25% CONTINGENCY	$263.63	$264.05	$279.81	$282.04
TOTAL COST	$308,000 -	$283,000	$481,000 -	$344,000

DESIGNED BY	Steve Wiman	DATE	2/2009
DRAWN BY	Steve Wiman	DATE	
CHECKED BY		DATE	
APPROVED		DATE	

STRUCTURE DESIGN BRANCH

PLANNING STUDY

HOOPA BLUE SLIDE VIADUCTS

BRIDGE NO. TBD	CU 01
SCALE: As Shown	EA 38490K

hoopa_aps.dgn 2/24/2009 2:31:55 PM

State of California
DEPARTMENT OF TRANSPORTATION

Business, Transportation and Housing Agency

Memorandum

Flex your power!
Be energy efficient!

To: JUAN TRUPP
Office of Advance Planning
District 1
North Region

Date: March 24, 2009

File: 01-Hum-96-10.48/10.65
Hoopa Blue Slide Viaducts
01-38490K

From: STEVE WIMAN SDW
Liaison Engineer
Bridge Design North
Division of Engineering Services

Subject: Advance Planning Study

As you requested by memorandum dated January 14, 2009, an advance planning study has been prepared to construct sidehill viaduct structures to provide a four-foot wide right shoulder and a traffic barrier at four locations.

The estimated construction cost, including 10% time related overhead, 10% mobilization and 25% contingencies, is as follows:

Sidehill Viaduct	Post Mile	Viaduct Length	Cost
Location 1	10.49	87 ft	$308,000
Location 2	10.54	80 ft	$283,000
Location 3	10.57	128 ft	$481,000
Location 4	10.63	91 ft	$344,000

The total structure cost estimate is $1,416,000.

The following table summarizes the projected total structure cost based on a 5.5% escalation rate:

Year	Escalated Cost
2010	$1,494,000
2011	$1,576,000
2012	$1,663,000
2013	$1,754,000
2014	$1,851,000

The escalated structure cost is provided for information only and does not replace annual cost updates as required by Department policy.

The cost of the AC surfacing, Temporary Railing Type K, and traffic control is not included in the structure estimate.

The preliminary working day estimate to construct all four viaducts is 165 working days.

The Advance Planning Study drawing is attached.

If you have any questions regarding this study, please call me at (916) 227-8797.

Attachment

c: K Holden, Bridge Design North
E Taddese, Project Coordination
R Bibbens, Geotechnical Design
S Altman, Structure Construction
P Whitfield, Structure Maintenance
K Wall, Structure Maintenance
J Young, Bridge Estimating

ATTACHMENT L

PROGRAMMING SHEET

PROGRAMMING SHEET - 2009/2010

EA: 01-38490 | Project Manager: Richard Mullen | Date: 08/03/2009
Proj Name: Hoopa Blue Slide | Co-Rte-PM: HUM-096- 010.5/ 010.7 | Type: SHOPP

PROJECT SCHEDULE

MILESTONE		DATE (STATUS)
Begin Environmental Document	M020	10/01/2010 (T)
Begin Project Report	M040	07/01/2010 (T)
Circulate Environmental Document (DED)	M120	07/01/2012 (T)
Project Approval & Environmental Document (PA&ED)	M200	10/01/2012 (T)
District Submits Bridge Site Data to Structures	M221	10/01/2012 (T)
Right of Way Maps	M224	10/01/2012 (T)
Regular Right of Way	M225	01/01/2013 (T)
District Plans, Specifications & Estimates to DOE	M377	05/01/2014 (T)
Draft Structures Plans, Specifications & Estimates	M378	04/01/2014 (T)
District Plans, Specifications & Estimates (PS&E)	M380	07/01/2014 (T)
Right of Way Certification	M410	11/01/2014 (T)
Ready to List (RTL)	M460	11/01/2014 (T)
Headquarters Advertise (HQ AD)	M480	12/01/2014 (T)
Approve Construction Contract	M500	03/01/2015 (T)
Contract Acceptance (CCA)	M600	10/01/2017 (T)
End Project	M800	01/01/2019 (T)

ESTIMATE	DATE	AMOUNT
ROADWAY	06/18/09	$ 1078
BRIDGE	06/18/09	$ 1586
Subtotal Const		$ 2664
RIGHT OF WAY	05/21/09	$ 259
MITIGATION		$ 0
Subtotal RW		$ 259
GRAND TOTAL		$ 2923

EXISTING PROGRAMMING	
PAED	$
PS&E	$
RW - Sup	$
RW - Cap	$
Const - Sup	$
Const - Cap	$

*Does not apply to RW Capital + Not Escalated ++ Only Escalated to 1 year into Future

PROJECT COSTS BY SB45 CATEGORY

CAPITAL COST ESTIMATE (Escalation Factor)	Prior Yrs+	09/10+	10/11 (3.5%)	11/12 (3.5%)	12/13 (3.5%)	13/14 (3.5%)	Future++ (3.5%)	Total
Right of Way							259	$ 259
Construction							3163	$ 3,164
					CAPITAL COSTS TOTAL			$ 3,423

SUPPORT COSTS (Escalation Factor)			(1.5%)	(1.5%)	(1.5%)	(1.5%)	(1.5%)		Sup/Cap
PAED		10	113	126	112			$ 361	28%
PS&E					242	148	58	$ 448	34%
Right of Way					117	32	113	$ 261	20%
Construction							240	$ 240	18%
							SUPPORT COSTS TOTAL	$1,310	38%

TOTAL PROJECT COSTS	$ 4,733

PROJECT SUPPORT IN PYS

	Prior Yrs	09/10	10/11	11/12	12/13	13/14	Future	Total	PY %
Environmental	0.00	0.00	0.09	0.06	0.48	0.00	0.00	1.17	
Design	0.00	0.00	0.11	0.03	1.2	0.50	0.20	2.31	
Engineering Services	0.00	0.00	0.04	0.05	0.07	0.10	0.01	0.28	
Surveys	0.00	0.01	0.20	0.2	0.62	0.03	0.40	1.55	
Right of Way	0.00	0.00	0.01	0.01	0.13	0.11	0.19	0.45	
Traffic	0.00	0.01	0.05	0.06	0.61	0.06	0.06	0.41	
Construction	0.00	0.00	0.02	0.02	0.18	0.06	1.09	1.37	
Project Management	0.00	0.01	0.02	0.03	0.04	0.03	0.05	0.18	
District Units*	0.00	0.01	0.02	0.03	0.05	0.04	0.03	0.17	
Subtotal Dist/Region Resources	0.00	0.13	0.56	1.30	2.93	0.93	2.03	7.88	
59-DES Project Development	0.00	0.00	0.00	0.00	0.00	0.00	0.02	0.02	
59-DES Structures Foundation	0.00	0.00	0.00	0.00	0.00	0.00	0.00	0.00	
59-Office Engineer	0.00	0.00	0.00	0.00	0.00	0.00	0.09	0.09	
59-DES Project Management	0.00	0.00	0.00	0.00	0.00	0.00	0.00	0.00	
59-DES Construction	0.00	0.00	0.00	0.00	0.00	0.00	0.00	0.00	
59-DES Other Units**	0.00	0.00	0.00	0.00	0.00	0.00	0.00	0.00	
Subtotal DES Resources	0.00	0.00	0.00	0.00	0.00	0.00	0.11	0.11	
TOTAL PYs	**0.00**	0.13	0.56	1.3	2.93	0.93	2.14	7.99	

*Admin, Plng, Maintenance
**DES Admin, DES Plng, DES Maintenance
HRS/PYS = 1758
Comments:

ATTACHMENT M

RISK MANAGEMENT PLAN

Risk Input Sheet

DIST- EA 01-38490				Project Name: Hoopa Bluffs CO - RTE - PM HUM-96-10.5/10.7							Project Manager: Richard Mullen Telephone: 707-441-5877							Date Register Created: May 12, 2009				Date Register Last Updated:			
Item	Risk ID	Status of Risk	Opportunity or Threat	RBS Risk Category	Date Risk Identified	Risk Description	Root Cause(s)	Objective	Probability (P)	L/NL	Cost/Time Impact Value	Impact (I)	Overall Risk Rating	Risk Owner	Risk Owner Phone	Risk Owner Mobile Phone	Risk Owner Email Address	Risk Trigger(s)	Strategy	Response Actions	Adjusted Cost/Time Impact Value	Primary WBS	Additional WBS	Status Date & Review Comments	Next Review Date
AUTO	AUTO	DROP DOWN	DROP DOWN	DROP DOWN	POP UP on DBL CLICK	MANUAL ENTRY	MANUAL ENTRY	DROP DOWN	DROP DOWN		OPTIONAL	DROP DOWN	AUTO	MANUAL ENTRY	MANUAL ENTRY	MANUAL ENTRY	MANUAL ENTRY	MANUAL ENTRY	DROP DOWN	MANUAL ENTRY	OPTIONAL	PULL DOWN SELECTION	MANUAL ENTRY	MANUAL ENTRY	POP UP on DBL CLICK
1	01-38490-01	Active	Threat	PM	05/12/09	scope creep	communication	SCOPE	1=Very Low (1-9%)	Nonlinear	Cost/Time Impact Value	1 =Very Low	Low	Richard Mullen	(707) 441-5877	(707) 498-3516	Richard Mullen@dot.ca.gov	Request to add work or scope	MITIGATE	Any scope changes will need to be approved by the project sponsor first	Adjusted Cost/Time Impact Value	160 PREPARE AND APPROVE PROJECT REPORT AND FINAL ENVIRONMENTAL	Additional WBS		
2	01-38490-02	Active	Threat	PM	05/12/09	Tribe support	communication	SCOPE	1=Very Low (1-9%)	Nonlinear	Cost/Time Impact Value	4 =Med	Low	Richard Mullen	(707) 441-5877	(707) 498-3516	Richard Mullen@dot.ca.gov	Tribe voices concerns over work being proposed	MITIGATE	Present scope to tribe and request their support before finalizing scope	Adjusted Cost/Time Impact Value	165 PERFORM ENVIRONMENTAL STUDIES AND PREPARE DRAFT ENVIRONMENTAL	Additional WBS		
3	01-38490-03	Active	Threat	PM	05/12/09	staff priorities	plannning	TIME	2=Low (10-19%)	Nonlinear	Cost/Time Impact Value	4 =Med	Med	Richard Mullen	(707) 441-5877	(707) 498-3516	Richard Mullen@dot.ca.gov	Functional unit(s) can not complete assigned task due to other priorities	MITIGATE	Continuous monitoring of functional units workload	Adjusted Cost/Time Impact Value	165 PERFORM ENVIRONMENTAL STUDIES AND PREPARE DRAFT ENVIRONMENTAL	Additional WBS		
4	01-38490-04	Active	Threat	DESIGN	05/14/09	drilling output	surveys	SCOPE	2=Low (10-19%)	Nonlinear	Cost/Time Impact Value	4 =Med	Med	Richard Mullen	(707) 441-5877	(707) 498-3516	Richard Mullen@dot.ca.gov	Field review could encounter different soil formation	ACCEPT	Conduct drilling samples and survey monitoring	Adjusted Cost/Time Impact Value	250 PREPARE FINAL STRUCTURES PS&E PACKAGE	Additional WBS		
5	01-38490-05	Active	Threat	DESIGN	05/14/09	geotechnical output	geotechnical	COST	2=Low (10-19%)	Nonlinear	Cost/Time Impact Value	2 =Low	Low	Richard Mullen	(707) 441-5877	(707) 498-3516	Richard Mullen@dot.ca.gov	Geotechnical could propose soil mitigation and soil testing	MITIGATE	Proactive Geotechnical approach as soon as data become available	Adjusted Cost/Time Impact Value	250 PREPARE FINAL STRUCTURES PS&E PACKAGE	Additional WBS		
6	01-38490-06	Active	Threat	ENV	05/15/09	underground soil conditions	environmental	COST	2=Low (10-19%)	Nonlinear	Cost/Time Impact Value	2 =Low	Low	Richard Mullen	(707) 441-5877	(707) 498-3516	Richard Mullen@dot.ca.gov	Environmental request extra field consideration	MITIGATE	Environmental monitoring	Adjusted Cost/Time Impact Value	235 MITIGATE ENVIRONMENTAL IMPACTS AND CLEAN UP HAZARDOUS WASTE	Additional WBS		
7	01-38490-07	Active	Opportunity	ENV	05/15/09	art display in concrete barrier Type 80	landscape architecture	TIME	3=Med (20-39%)	Nonlinear	Cost/Time Impact Value	2 =Low	Low	Richard Mullen	(707) 441-5877	(707) 498-3516	Richard Mullen@dot.ca.gov	Community involvement	ACCEPT	Present scope to tribe and request their support before finalizing scope	Adjusted Cost/Time Impact Value	250 PREPARE FINAL STRUCTURES PS&E PACKAGE	Additional WBS		
8																									
9																									
10																									
11																									
12																									
13																									
14																									
15																									
16																									
17																									
18																									
19																									
20																									