PROJECT STUDY REPORT-
PROJECT DEVELOPMENT SUPPORT
(PSR-PDS)
to

Request Programming for Capital Support
(Project Approval and Environmental Document Phase)

On Route 101

Between 0.7 mile north of De La Cruz Boulevard/Trimble Road
and 0.8 mile south of De La Cruz Boulevard/Trimble Road

APPROVAL RECOMMENDED:

John H. Ristow
Chief CMA Officer, Santa Clara Valley Transportation Authority
ACCEPTS RISKS IDENTIFIED IN THIS PSR-PDS AND ATTACHED RISK REGISTER

APPROVAL RECOMMENDED:

Dina El-Tawansy
CALTRANS PROJECT MANAGER

APPROVED:

Bijan Sartipi
DISTRICT DIRECTOR

11-27-12
DATE

TABLE OF CONTENTS

1. INTRODUCTION 3

2. BACKGROUND 5

3. PURPOSE AND NEED 7
3A. Purpose 7
3B. Need 7

4. TRAFFIC ENGINEERING PERFORMANCE ASSESSMENT 9
4A. Traffic Reports 9
4B. Analysis Tools 9
4C. Data Sources 9
4D. Analysis Periods 10
4E. Analysis Years 10
4F. Analysis Limits 10
4G. Performance Measures 10

5. DEFICIENCIES 11
5A. Traffic Operations 11
5B. Nonstandard Features 11
5C. Accident Rates 11

6. CORRIDOR AND SYSTEM COORDINATION 13
6A. Route Description 13
6B. Systems Planning 14

7. ALTERNATIVES 16
7A. Alternative Description 16
7B. Complete Streets 17
7C. Design Exceptions 18
7D. Preliminary Assessment/Environmental Document Work 20

8. RIGHT OF WAY 22
8A. Utilities 22
8B. Railroad 22

9. STAKEHOLDER INVOLVEMENT 23

10. ENVIRONMENTAL DETERMINATION/DOCUMENTION 24

11. FUNDING 25
11A. Capital Outlay Project Estimate 25
11B. Capital Outlay Support Estimate 25
11C. Agreements 25

12. SCHEDULE 26

13. RISKS 27

14. FHWA COORDINATION 28

15. DISTRICT CONTACTS 29

16. PROJECT REVIEWS 30

17. ATTACHMENTS 31
ATTACHMENT A: Location and Vicinity Map
ATTACHMENT B: Layouts, Profile, Typical Cross Sections and Bridge APS
ATTACHMENT C: Preliminary Environmental Analysis Report (PEAR)
ATTACHMENT D: Transportation Planning Scoping Information Sheet
ATTACHMENT E: Conceptual Cost Estimate – Right of Way Data Component
ATTACHMENT F: Stormwater Documentation
ATTACHMENT G: PSR-PDS Survey Needs Questionnaire
ATTACHMENT H: Risk Register
ATTACHMENT I: Quality Management Plan
ATTACHMENT J: Division of Engineering Services PSR-PDS Scoping Checklist
ATTACHMENT K: Design Scoping Index (Cooperative Agreement)

1. INTRODUCTION

The Santa Clara Valley Transportation Authority (VTA) and the City of San Jose propose to make the following key improvements to relieve existing and future traffic congestion at the US 101/De La Cruz Boulevard/Trimble Road interchange:

- Reconstruct the existing three-quadrant cloverleaf interchange to a partial clover leaf design (Type L-9);
- Widen the overcrossing structure from four lanes to eight lanes;
- Realign the southbound off and on ramps from and to US 101/De La Cruz Boulevard to facilitate a "bike and pedestrian friendly design;"
- Realign the northbound on ramps from US 101/De La Cruz Boulevard to facilitate a "bike and pedestrian friendly design;
- Construct improvements at adjacent intersections on Trimble Road and De La Cruz Boulevard

Note – Early in this study, there was a proposed improvement to add a second lane on the US 101 southbound off-ramp to southbound SR 87 to improve operations for vehicles traveling from the mainline of southbound US 101 to southbound SR 87. This improvement will be implemented as a stand-alone project through an encroachment permit. It is not constructed yet and is anticipated to be implemented before the construction of US 101 De La Cruz Boulevard/Trimble Road Interchange Project.

The improvements listed above were identified in an earlier study as part of the US Route 101 North Corridor Study that was completed in May 2005. The proposed project will improve traffic operations and safety for bicyclists and pedestrians as well as motorists traveling across the interchange. The project will also improve traffic operations to the southbound merge onto US 101.

The location and vicinity maps are shown in **Attachment A** and the typical cross sections of the proposed improvements are shown in **Attachment B**.

Project Limits	04-SCL-101-PM 40.0/41.5
Number of Alternatives	Two (2) including "No Build"
Capital Outlay Support for PA& ED	$ 582,000
Capital Outlay Construction Cost	$ 23,262,000
Capital Outlay Right of Way Cost	$ 4,683,000
Funding Source	PA&ED and Design – Local (Potentially City of San Jose and/or VTA) Construction – Local (Potentially City of San Jose and/or VTA)
Type of Facility	Local Interchange (Type L-9)
Number of Structures	1
Anticipated Environmental Determination or Document	CEQA Categorical Exemption
Legal Description	Construction on State Highway in Santa Clara County from 0.7 mile north of De La Cruz Boulevard/Trimble Road to 0.8 mile south of De La Cruz Boulevard/Trimble Road
Project Development Category	3

The remaining capital outlay support, right of way and construction components of the project are preliminary estimates and are not suitable for programming purposes. Either a Supplemental PSR or Project Report will serve as the programming document for the remaining components of the project. A project report will serve as approval of the "selected" alternative. Additional cost estimates for this project is provided in **Attachment E**.

No other agency approvals are required at this time. It is anticipated that other agencies such as the Federal Aviation Administration will need to be included in the review of this project during the development of the Project Approval/Environmental Document (PA/ED) because of the close proximity to the San Jose International Airport.

2. BACKGROUND

Widening of the De La Cruz Boulevard/Trimble Road Bridge from four to eight lanes to separate through and ramp traffic was identified as one of three mid-term projects in the US Route 101 North Corridor Study completed in May 2005. This study evaluated and recommended improvements along US 101 from Lawrence Expressway interchange in the City of Sunnyvale to the Alum Rock Avenue interchange in the City of San Jose.

The City of San Jose, in cooperation with VTA and the County of Santa Clara, propose the reconfiguration and seismic upgrade of the existing De La Cruz Boulevard/ Trimble Road interchange on US 101. The existing interchange is located northwest of the San Jose International Airport (SJC), on US 101, between Guadalupe Parkway (SR 87) and the Montague Expressway (County Road G-4), within the City of San Jose, Santa Clara County and City of Santa Clara.

The US 101/De La Cruz Boulevard/Trimble Road Bridge Overcrossing (OC) has been programmed for seismic retrofit by Caltrans but not yet constructed. This project would incorporate current seismic standards for new structures. The US 101/De La Cruz Boulevard/Trimble project is listed in the following references:

- 2012 Draft Santa Clara Valley Transportation Plan 2040 (VTP 2040), Regional Transportation Plan ID reference number 21722 and 2009 Santa Clara Valley Transportation 2035 (VTP 2035) as VTP ID reference number H24 - US 101/Trimble Rd./De La Cruz Blvd./Central Expwy. Interchange Improvements project.
- Metropolitan Transportation Commission's Transportation 2035 Plan reference number 21722 – "Construct a new interchange at Trimble Road and Montague Expressway"
- US Route 101 North Corridor Study, May 2005

During the early development of this project, the US 101 Stem Road project (EA 4874G) was proposed to alleviate the projected high volumes of traffic weaving between the SR 87 merging traffic to northbound US 101 and US 101 northbound exiting traffic to De La Cruz/Trimble Road. The US 101 Stem Road project proposed the construction of a stem road on northbound US 101 between the interchange and upstream of SR 87 to allow for the northbound US 101 exiting traffic to De La Cruz Boulevard/Trimble Road to exit through the stem road to avoid vehicles weaving with SR 87 merging traffic to northbound US 101. The US 101 Stem Road project also included a realignment of the northbound on ramp from westbound Trimble Road onto northbound US 101. The US 101 Stem Road project and northbound improvements at the interchange were built in 2005.

Another improvement that is planned is the addition of a second lane on the US 101 southbound off-ramp to southbound SR 87 to improve operations for vehicles traveling from the mainline of southbound US 101 to southbound SR 87.

This improvement is planned to be completed by VTA under an encroachment permit before the construction of US 101 De La Cruz Boulevard/Trimble Road Interchange Project.

This PSR-PDS focuses the scope of improvements to modify the southbound half of the interchange. This project would complete the L-9 partial cloverleaf configuration, along with associated widening of the OC bridge, De La Cruz Boulevard and Trimble Road within the interchange limits.

The north end of both runways 30-L/12-R and 30-R/12-L at SJC Airport are in close proximity to the project. It is anticipated that any construction affecting vertical clearance of the flight path along both runways will require Federal Aviation Administration (FAA) review and approval under Federal Aviation Regulations (FAR) Part 77. The existing interchange bridge has a nonstandard vertical clearance of 15 ft. The current vertical clearance standard is 16.5 ft. per Highway Design Manual. The FAA Obstruction Review opposes the option of raising the bridge to provide required vertical clearance. Replacing the existing T-beam structure with California super girder is proposed to reduce bridge structure depth from 5 ft. to 3.5 ft. in order to meet the standard vertical clearance.

The proposed improvements for the US 101/De La Cruz Boulevard/Trimble Road Interchange Project do not include improvements to the US 101 mainline, as it is outside the scope of this PSR-PDS. However, the proposed ultimate section developed for the interchange is compatible with the ultimate Express Lane cross section width, and has been reviewed with the headquarters geometrician. The updated section showing the existing lanes and future express lanes under the De La Cruz overcrossing is provided in **Attachment B.**

3. PURPOSE AND NEED

Congestion in the vicinity of the US 101 De La Cruz Boulevard/Trimble Road Interchange in San Jose exists today during the peak commute hours and is anticipated to increase in the future due to background growth, particularly in North San Jose and Santa Clara areas of Santa Clara County. The project purpose and need are described below:

3A. Purpose

The purpose of the project is as follows:

1) To improve traffic operations at the US 101/De La Cruz Boulevard/Trimble Road Interchange, including through movements crossing over US 101 and turning movements at the interchange.

2) To improve mobility and safety for bicyclists and pedestrians traveling across the interchange;

3) To improve the interchange design to enhance safety for vehicles merging onto southbound US 101 within the De La Cruz Blvd. interchange;

4) To improve the structural adequacy of the existing bridge structure.

3B. Need

1) The existing local road intersections at the east and west ends of the interchange currently operate at LOS F in the PM Peak Hour and is anticipated to operate at unacceptable conditions in the future. The City of San Jose General Plan plans for intensification of the land use along N. First Street and Zanker Road corridors in North San Jose. This will place greater demands on key access routes to the North First Street, including Trimble Road/De La Cruz Boulevard at US 101.

2) Currently, there is no pedestrian/bike access available between the interchange and Central Expressway on Trimble Road/De La Cruz Boulevard. The existing interchange does not meet federal and state policies and local guidelines related to Complete Streets (e.g. H.R. 1780, AB 1354 – Complete Streets Act of 2008, Caltrans Directive DD-64-R1 – Complete Streets: Integrating the Transportation System, and VTA Bicycle Technical Guidelines), where roadway improvement projects are to be designed for multimodal use in balance with community goals; addressing the safety and mobility needs of bicyclists, pedestrians and transit users of all ages and abilities. A continuous sidewalk on the north side of the overcrossing and bike lanes in both directions through the interchange should be provided to accommodate pedestrians and bicyclists in addition to motorists. Bicyclists traveling in the southbound and northbound directions on De La Cruz Boulevard must negotiate the high speed right turn lanes to on-ramps of

northbound and southbound US 101. The geometric configuration at this location is not bicycle/pedestrian friendly. In addition, this roadway segment is classified by VTA as a corridor of bicycle travel significance that is identified as a "Cross County Bicycle Corridor" (CCBC) in the 2008 Santa Clara County Bicycle Plan.

3) Accident rates for the southbound on and off loop ramps are 40-60% higher than the state average for similar facilities. This can be attributed to the short weave distance for those ramps on southbound US 101.

4) The US 101 De La Cruz Boulevard/Trimble Road overcrossing structure (Bridge No. 37 0180) was built in 1961 and had a minimum structural sufficiency rating of 80 in 2009. This bridge does not meet current design standards and will need to be replaced in the near future.

4. TRAFFIC ENGINEERING PERFORMANCE ASSESSMENT

The scope and magnitude of traffic engineering work will be developed as part of the PA/ED phase. Below is a description of the anticipated work that would need to be included in the Traffic Engineering Assessment.

4A. Traffic Reports

The scope of work for the PA/ED Phase includes calibrating the traffic model to replicate the existing conditions and preparing an existing conditions report, developing the travel demand numbers and preparing a traffic forecast report, and conducting traffic operational analysis for both build and no-build alternatives and preparing a traffic operational analysis report.

4B. Analysis Tools

The approach for conducting the traffic operational analysis will be developed by the Project Development Team (PDT) during the PA/ED phase. The mainline will be analyzed using methodologies such as those described in the Caltrans Operations Academy-short course notes on "operational Analysis" or equivalent methodology to evaluate congested freeway segments. The intersections will be analyzed using Synchro/SimTraffic. Existing year and future year models will be developed for both AM and PM peak periods and calibrated to replicate observed conditions using VTA's countywide model. VTA's model includes existing and future planned highway projects and land use growth assumptions. These calibrated models will then be modified to match the forecasted 2035 traffic demands, assumed baseline roadway improvements, and the alternative scenarios.

4C. Data Sources

The Project Development Team will utilize traffic-related data and information relevant to the study area that is available from existing sources to develop the existing conditions traffic operational model. These existing sources include, but are not limited to:

- Caltrans Census count database,
- Recent studies and reports (VTA Annual Monitoring & Conformance Reports, Ramp Metering, US 101 Route 101 North Corridor Study, etc),
- Caltrans, City of San Jose and Santa Clara County congestion monitoring activities,
- Aerial Photographs from VTA's CMP Monitoring & Conformance reports

To supplement these existing sources, the team will also conduct field observations during both the AM and PM peak hour to verify geometries, queuing and congestion patterns. All data compiled or collected will be reviewed for reasonableness. Understanding of congestion patterns will be used to adjust traffic count data (flow volumes) to create a traffic demand volume dataset for the analysis area.

4D. Analysis Periods

The analysis will include AM and PM peak hours with an emphasis in the PM as congestion at the De La Cruz Boulevard/Trimble Road interchange typically occurs at this time in the US 101 southbound directions.

4E. Analysis Years

To support the project approval and environmental document process, this analysis will be conducted for the Existing Condition year and Design Horizon year (2035).

4F. Analysis Limits

The analysis area includes the segment between 0.7 mile north of De La Cruz Boulevard/Trimble Road and 0.8 mile south of De La Cruz Boulevard/Trimble Road of US 101; Trimble Road/Seaboard Avenue intersection (east side of interchange) and De La Cruz Boulevard/Central Expressway (west side of interchange) intersections

4G. Performance Measures

Performance measures such as delay, length of queue, travel times, speeds, weaving level of service, and intersection level of service will be used to evaluate the performance of the project improvements.

5. DEFICIENCIES

5A. Traffic Operations

The primary reason for traffic congestion along Trimble Road/De La Cruz Boulevard overcrossing from Trimble Road/Seaboard Avenue intersection (on the east side of US 101) to the De La Cruz Boulevard/Central Expressway intersection (on the west side of US 101) is due to the lane reductions from six through lanes on the north and south sides of the overcrossing to four through lanes on the bridge structure. This configuration reduces vehicle volume capacity at the overcrossing and forces traffic going to the on ramps to merge with through traffic traveling across the bridge.

The congestion is worsened when bicyclists and pedestrians are present, especially during the peak periods. Bicyclists have to merge and share lanes with vehicles and pedestrians have to walk across the bridge structure with minimal buffer between the walkway and the roadway.

Preliminary traffic analysis indicates that the level of service and operational efficiency of the interchange and US 101 mainline lanes would be improved with construction of the Build Alternative. Additional traffic analysis will be conducted as part of PA/ED phase of this project.

5B. Nonstandard Features

The US 101/De La Cruz Interchange was constructed in 1961 and does not meet current design standards including the minimum vertical clearance of 16.5 feet for structures over a freeway. The current vertical clearance is 15 feet.

Also, the existing overcrossing design does not accommodate safe passage for bicyclists and pedestrians traveling between Trimble Road on the east side of US 101 to De La Cruz Boulevard on the west side of US 101, specifically at the on and off ramp intersections.

5C. Accident Rates

The Traffic Accident Surveillance and Analysis System (TASAS) report for a three-year period from January 1, 2008 to December 31, 2010 was generated for the ramps in the project area. TASAS report results are summarized in the following Table 5-1. The accident rates on southbound on-ramps from both directions of De La Cruz Boulevard and southbound off-ramp to southbound De La Cruz Boulevard are higher than the state average for similar facilities. Total of 32 accidents were reported over the three-year period.

TABLE 5-1. ACCIDENT SUMMARY 1/1/2008 – 12/31/2010

Location (Postmile)	Number of Accidents			Actual Accident Rate			Average Accident Rate		
	Total	Fatal	Injury	Fatal	F+I	Total	Fatal	F+I	Total
SB On Fr NB De La Cruz (40.59)	14	0	1	0	0.06	**0.85**	0.003	0.20	0.65
NB On Fr NB De La Cruz (40.65)	2	0	0	0	0.00	0.45	0.004	0.20	0.70
SB Off To NB De La Cruz (40.67)	3	0	1	0	0.26	0.77	0.006	0.34	1.20
NB Off To SB De La Cruz (40.73)	3	0	0	0	0.00	0.32	0.006	0.34	1.20
SB On Fr SB De La Cruz (40.75)	5	0	0	0	0.00	**0.72**	0.004	0.20	0.70
NB On Fr SB De La Cruz (40.81)	0	0	0	0	0.00	0.00	0.003	0.20	0.65
SB Off To SB De La Cruz (40.84)	5	0	0	0	0.00	**1.09**	0.004	0.26	0.85

F+I = Fatal + Injury. Accident rates are per million vehicle miles.

The deficiencies associated with this project will be described in further detail in PA/ED.

6. CORRIDOR AND SYSTEM COORDINATION

6A. Route Description

- **US 101**
  US 101 is a major south to north highway extending from Los Angeles on the south to the Oregon border on the north. In the project area, there are three mixed flow lanes and one High Occupancy Vehicle (HOV) lane in each direction. Northbound US 101 traffic destined to De La Cruz Boulevard uses a separate collector-distributor road which exits US 101 and does not weave with US 101 traffic from SR 87. Northbound SR 87 traffic destined to De La Cruz Boulevard also connects to this collector-distributor road. Southbound traffic from De La Cruz to SR 87 utilizes an existing auxiliary lane on US 101. The 2010 average annual daily traffic (AADT), as reported by Caltrans, was 165,000 vehicles per day between Montague Expressway (G-4) and De La Cruz Boulevard, and 179,000 vehicles per day between De La Cruz Boulevard and Guadalupe Parkway (SR 87).

- **US 101/De La Cruz Boulevard/Trimble Road Interchange**
  This interchange is a modified cloverleaf interchange configuration. The northbound direction is now a Type L-9 configuration and the southbound direction is a Type L-10. There are three loop ramps, including a northbound loop on-ramp, a southbound loop on-ramp and a southbound loop off-ramp. The distance between the southbound US 101 mainline on and off loop ramp is very short, less than 260 ft. There are four diamond ramps. Only the northbound diamond off-ramp is signalized at the intersection with De La Cruz Boulevard. All on-ramps are currently metered. The design speed of the existing interchange is 35 mph.

- **De La Cruz Boulevard**
  This road is a six-lane major arterial with a general north-south alignment, except at the US 101 overcrossing. The De La Cruz Boulevard Overcrossing of US 101 is four lanes wide with a raised median. The transition from six to four travel lanes occurs at the on-ramps for northbound and southbound US 101, with lane drops as right turn only entrance ramps. De La Cruz Boulevard intersects with Central Expressway (G-6) approximately 1,300 feet southwest of the US 101 interchange. The Seaboard Avenue/Trimble Road/De La Cruz Boulevard intersection is approximately at 1,200 feet northeast of the interchange. Both intersections are signalized. The US 101 northbound diamond tangent off-ramp is signalized. The posted speed along De La Cruz Boulevard west of the project area is 40 mph.

- **Trimble Road**
  At the Seaboard Avenue intersection east of the interchange, De La Cruz Boulevard arterial changes to Trimble Road. De La Cruz Boulevard continues, but turns north at the Seaboard Avenue intersection. Trimble Road is a six-lane major arterial traversing north San Jose in a southwest-northeast direction. It connects US 101 to Montague

Expressway (G-4) to the northeast. The posted speed along Trimble Road east of the project area is 45 mph.

- **SR 87 Freeway**
  SR 87 is a six-lane freeway south of its junction with US 101, and connects to the I-280 and SR 85 freeways in South San Jose. SR 87 has four mixed flow lanes and two HOV lanes. The 2010 average annual daily traffic (AADT) as reported by Caltrans, was 67,000 vehicles per day on SR 87 connecting to US 101.

- **Central Expressway (County G-6)**
  Central Expressway is part of the Santa Clara County expressway system, and is a six-lane divided arterial facility with a posted speed limit of 50 mph. Central Expressway has been recently widened to include one outside HOV lane and two mixed flow lanes in each direction. A triple left turn was recently constructed by the County for southbound to eastbound turning traffic at De La Cruz Boulevard. Central Expressway is aligned parallel to US 101 and connects De La Cruz Boulevard to the cities of Santa Clara, Sunnyvale and Mountain View

6B. Systems Planning

- **US 101 Corridor System Management Plan**
  The Build Alternative is consistent with the Corridor System Management Plan (CSMP), adopted in December 2010. The Build Alternative will not add traffic lanes to US 101, but will improve congestion through improvement of the SB on/off ramps to De La Cruz Boulevard/Trimble Road, resulting in improved level of service.

  US 101 is functionally classified as a freeway facility along the entire length of this CSMP corridor. This segment of US 101 is an eight-lane facility with the inside lanes used as High Occupancy Vehicle (HOV) lanes during the commute hours between 5:00–9:00 AM and between 3:00–7:00 PM.

  In the 1998 Interregional Transportation Strategic Plan, US 101 is designated as an interregional "Focus Route," specified as a facility of the highest priority for completion to the minimum standard in a 20-year planning period. US 101 is designated a Surface Transportation Assistance Act (STAA) truck route, allowing large trucks to operate on this route. According to 2008 Caltrans Annual Average Daily Truck Traffic data, trucks comprise 3.23 to 10.29 percent of the total daily vehicle traffic along the CSMP corridor.

- **Local Project Planning**
  Several studies have been completed over the last 20 years that analyzed mainline US 101 and interchanges and arterial streets within the cities of Santa Clara and San Jose. These various studies, including the 2004 and 2005 VTA Highway 101 Central and North Corridor Studies, have demonstrated that the existing interchanges and the local roads and streets in the corridor cannot provide the necessary traffic capacity and operational

level of service to satisfactorily accommodate the future year demands. The following projects are currently in the VTP 2035 Plan in the project vicinity:

- **US 101 Express Lanes:** SR 85 in Mountain View to SR 85 in San Jose (Conversion). Convert existing HOV lanes to express lanes on US 101 between SR 85 Mountain View and SR 85 in San Jose.

- **US 101 Auxiliary Lane Widening:** Trimble Rd. to Montague Expressway. Widen US 101 for northbound and south-bound auxiliary lane from Trimble Rd. to Montague Expressway.

- **US 101/Montague Expressway-San Tomas Expressway Interchange.** Modified interchange for additional traffic growth from Montague Expressway.

7. ALTERNATIVES

7A. Alternative Description

There are two alternatives being considered for this project: the No Build alternative and one Build alternative. The descriptions for each of the alternatives are described below:

1) **No Build Alternative** - The No-Build alternative proposes no modifications to the current US 101/De La Cruz Boulevard/Trimble Road interchange other than routine maintenance and rehabilitation of the facility and any currently planned and programmed projects within the area. This alternative would result in continued deterioration of traffic conditions with the additional forecasted traffic demand in the future. This alternative does not meet the need and purpose of the proposed project. Rather, it provides a basis for the analysis and evaluation of the Build Alternative.

2) **Build Alternative** - The project for the Build Alternative includes reconstructing the existing three-quadrant cloverleaf interchange to a Type L-9 partial cloverleaf interchange. The Build Alternative includes the following elements:
   - Reconstruct the existing De La Cruz Boulevard Bridge Overcrossing from a four-lane to eight-lane facility, which includes exit lanes to the northbound and southbound loop on ramps. Reconstruction would use pre-cast California super-girders to reduce structure depth, provide standard vertical clearance over US 101 and to allow for construction under the air space restriction of the adjacent San Jose International Airport.
   - Modify existing De La Cruz Boulevard to provide an additional through lane in each direction from Trimble Road to Central Expressway.
   - Reconstruct the northbound on-ramp from De La Cruz Blvd. to provide improved bicycle lane and pedestrian crossing safety.
   - Modify the northbound loop on-ramp from De La Cruz Boulevard to accommodate the OC bridge widening.
   - Modify the southbound loop on-ramp from De La Cruz Boulevard to accommodate the OC bridge widening, and to provide a right-angle intersection for improved bicycle and pedestrian crossing safety.
   - Construct a new intersection at the terminus of the US 101 southbound off-ramp at De La Cruz Boulevard.
   - Reconstruct the southbound on-ramp from De La Cruz Blvd. to provide improved bicycle lane safety.
   - An additional lane will be added to the northbound US101 diagonal and loop on-ramps, and also the southbound US101 loop on-ramp. The southbound off-ramp will terminate at De La Cruz Boulevard with 4 lanes at the ramp intersection.
   - Provide a pedestrian sidewalk on the north side of De La Cruz Boulevard between Trimble Road and Central Expressway.
   - Provide Class II bicycle lane striping in both directions on De La Cruz Boulevard between Trimble Road and Central Expressway.
   - Provide reconstructed ramp metering systems and HOV bypass lanes at each on-ramp.

- Reconstruct the intersection of De La Cruz Boulevard and Trimble Road to provide bike lanes and additional turn lanes.
- Reconstruct the intersection of De La Cruz Boulevard and Central Expressway to provide bike lanes, and additional through and turn lanes. Provide lane transition as needed on Central Expressway.
- Provide low height roadway and ramp safety lighting and signing in compliance with FAA glide slope clearance requirements.
- Provide island and fence for a portion of the San Jose International Airport ILS landing light system that crosses De La Cruz Boulevard.
- Modify existing drainage systems to accommodate the interchange improvements and implement current storm water quality BMP requirements.

The conceptual layout, profile and geometry of the project are provided in **Attachment B**. The proposed improvement is being planned to allow future addition of two express lanes in each direction of US101, with nonstandard shoulder and lane widths on the mainline.

7B. Complete Streets

The improvements for the US 101/De La Cruz Blvd interchange will include accommodations for all users within the context of the roadway per Complete Streets Act of 2008 and Caltrans Deputy Directive 64. The specific improvements will be identified in the PA/ED phase of the project. The following is a general description of the bicycle and pedestrian improvements.

In the existing condition, there is no pedestrian or bike access available between the US101/De La Cruz Blvd interchange and Central Expressway on Trimble Road/De La Cruz Boulevard. Bicyclists traveling in the southbound and northbound directions on De La Cruz Boulevard must negotiate the high speed right turn lanes to on-ramps of northbound and southbound US 101. The geometric configuration at this location is not bicycle/pedestrian friendly.

The project would provide Class II bicycle lane striping in both directions on De La Cruz Boulevard between Trimble Road and Central Expressway. The intersections of De La Cruz Boulevard/ Trimble Road and De La Cruz Boulevard/Central Express Way will also be reconstructed to provide bike lanes. A pedestrian sidewalk will be provided on the north side of De La Cruz Boulevard between Trimble Road and Central Expressway. The southbound off-ramp and loop on-ramp, and also the northbound diagonal on-ramp at the US101/De La Cruz Boulevard interchange will be reconstructed to provide a right-angle intersection for improved bicycle and pedestrian crossing safety.

7C. Design Exceptions

Based on the current level of design on the project alternative, there are a number of design exceptions anticipated with the project. Most of the exceptions are associated with the existing interchange location and its proximity to adjacent facilities, the location of the project adjacent to the airport and associated vertical restrictions, or physical constraints common to an urban environment. However, none are anticipated to be "fatal flaws" to proceeding into the PA/ED phase.

The following design exceptions are anticipated for the project. Design Exception fact sheets will be developed and if appropriate and justified, will be approved during the PA/ED phase.

Mandatory Design Exceptions

- M1 - SUPERELEVATION (HDM Index 202.2):
  The standard superelevation rate of 12% is required for curve with radius less than 625 ft at the NB US 101 on-ramp "S2" Line (radius 250 ft with 4% rate) and the SB US101 of-ramp "S3" Line (radius 312 ft with 6% rate) . This would not be corrected by the proposed project.

- M2 - SHOULDER WIDTH (HDM Index 302.1):
  The standard ramp shoulder width is 4 ft. but shoulder width of the northbound loop on ramp varies from 3.1 ft to less than 4 ft for a length of approximately 10 ft adjacent to one of the proposed bridge columns.

- M3 - HORIZONTAL CLEARANCES (HDM Index 309.1):
  The standard horizontal clearance for ramps is 4 ft but the horizontal clearance of the northbound loop on ramp to the proposed bridge column varies from 3.1 ft to less than 4 ft for a length of approximately 10 ft.

- M4 - INTERCHANGE SPACING (HDM Index 501.3):
  The standard minimum interchange spacing is one mile in urban area, the interchange spacing between De La Cruz Boulevard Interchange and Route 87 Interchange is about 0.5 mile. This would not be corrected by the proposed project.

- M5 – MINIMUM WEAVE LENGTH (HDM Index 504.7):
  The minimum weaving length between freeway-to-freeway interchanges and other interchanges is 5,000 ft. The weaving length between US101/De La Cruz Boulevard interchange and the US101/Route 87 interchange is 2,632 ft. This would not be corrected by the proposed project.

- M6 – CROSS SLOPES (HDM Index 301.2(2)(a)):
  The standard cross slope to be used for new construction on the traveled way for all types of surfaces shall be 2%. The traveled way cross slope on the new De La Cruz Boulevard Overcrossing is 1%.

Advisory Design Exceptions

- A1- SUPERELEVATION TRANSITION (HDM Index 202.5(2)):
  The standard superelevation runoff, 2/3 runoff on tangent and 1/3 on curve, cannot be achieved for curves at the terminus of SB off-ramp, the SB loop on-ramp and at the beginning of the NB on-ramp.

- A2- SUPERELEVATION TRANSITION (HDM Index 202.5(1)):
  Superelevation transition length from HDM Table 202.5a could not be provided for the curves the terminus of SB off-ramp (S3 Line), the SB loop on-ramp, the beginning of the NB on-ramp (S2 Line) and the beginning of NB loop on-ramp.

- A3- DESIGN SPEED (HDM Index 101.1):
  The design speed of 45 mph is required for Local Street per HDM Index 101.1, the vertical crest and sag curves at the De La Cruz Blvd./Trimble Road overcrossing bridge can only provide stopping sight distance for design speed of 35 mph.

- A4- MEDIAN WIDTH FOR CONVENTIONAL HIGHWAY (HDM Index 305.1(2)):
  The median width of 4 ft. is provided for the De La Cruz Blvd./Trimble Road overcrossing bridge, while 12 ft. of width is required per HDM.

- A5- MEDIAN WIDTH FOR FREEWAYS (HDM Index 305.1(1)):
  Minimum median width of 36 ft. is required per HDM but a median width of 22 ft. is provided for the Route 101. This is an existing condition.

- A6- SUCCESSIVE ON-RAMPS (HDM Index 504.3(9)):
  The distance between successive on-ramps should be 1,000 ft. but the distance between NB on-ramp and NB loop on-ramp is about 600 ft. This is an existing condition.

- A-7- LANE DROPS (HDM Index 504.3(1) (d)):
  Where conditions preclude the use of 50 to 1 taper, the lane should be dropped using a taper of no less than 30 to 1. Lane drop taper past the meter limit line is less than 30 to 1 at the following locations.
  - SB loop on-ramp lane drop taper provided is 24 to 1.
  - NB on-ramp lane drop taper provided is 27.5 to 1.
  - SB on-ramp lane drop taper is 20 to 1.

A review with HQ Design of the proposed design along with available information and anticipated design exceptions did not reveal any apparent fatal flaw issues. The specific design exceptions, mostly associated with the conforms at the ramp termini and existing conditions, will be further evaluated on the PA/ED phase of the project.

The Design Standards Risk Assessment Table is presented in the table below.

Design Standards Risk Assessment			
Alternative	Design Standard from Highway Design Manual Tables 82.1A & 82.1B	Probability of Design Exception Approval (None, Low, Medium, High,)	Justification for Probability Rating
Build (M1)	Index 202.2 – Standards for Superelevation	High	Pre-existing condtion. Discussed with HQ reviewer. No fatal flaws found.
Build (M2)	Index 302.1 – Shoulder Width	High	Pre-existing condtion. Discussed with HQ reviewer. No fatal flaws found.
Build (M3)	Index 309.1 – Horizontal Clearances	High	Pre-existing condtion. Discussed with HQ reviewer. No fatal flaws found.
Build (M4)	Index 501.3 – Interchange Spacing	High	Pre-existing condtion. Discussed with HQ reviewer. No fatal flaws found.
Build (A1)	Index 202.5 – Superelevation Transition	High	Pre-existing condtion. Discussed with HQ reviewer. No fatal flaws found.
Build (A2)	Index 202.5 – Superelevation Transition	High	Pre-existing condtion. Discussed with HQ reviewer. No fatal flaws found.
Build (A3)	Index 101.1 – Selection of Design Speed – Local Facilities with Connections to State Facilities	High	Pre-existing condtion. Discussed with HQ reviewer. No fatal flaws found.
Build (A4)	Index 305.1 – Median Width	High	Pre-existing condtion. Discussed with HQ reviewer. No fatal flaws found.
Build (A5)	Index 305.1 – Median Width	High	Pre-existing condtion. Discussed with HQ reviewer. No fatal flaws found.
Build (A6)	Index 504.3 – Distance Between Successive On-ramps	High	Pre-existing condtion. Discussed with HQ reviewer. No fatal flaws found.
Build (A7)	Index 504.3 – Ramp Lane Drop Taper	High	Pre-existing condtion. Discussed with HQ reviewer. No fatal flaws found.

7D. Preliminary Assessment/Environmental Document Work

It is anticipated that the proposed project would require technical studies during PA/ED such as:

- Cultural resource studies
- Floodplain evaluation
- Geotechnical study

- Hazardous waste site assessment
- Paleontology evaluation
- Scenic landscape and architectural review
- Traffic operations analysis

The Preliminary Environmental Assessment Report (PEAR, **Attachment C**) and Transportation Planning Scoping Checklist (**Attachment D**), also included in this PSR-PDS, identifies additional evaluations and studies that would be conducted as part of the PA/ED work.

7E. Transportation Management Plan (TMP)

A draft Transportation Management Plan (TMP) will be prepared in the PA/ED phase. The TMP will include a program of public information, driver information, and incident detection and response. The public information program would consist of media notification, telephone hotline, press release and traveler information system. The driver information program would notify driveways of freeway closures and detours using variable messages. The incident management will alert the California Highway Patrol to accidents under the Construction Zone Enhanced Enforcement Program (COZEEP).

8. RIGHT OF WAY

Implementation of the Build Alternative would require the acquisition of approximately 2.7 acres of right of way from 3 parcels utilized by the City of San Jose for airport uses and 1 private parcel. The acquisition areas are clear and no structures or other improvements would be affected. No relocations would be necessary.

8A. Utilities

There is an overhead PG&E electrical line crossing longitudinally through the project area along the northeast side of the facility. This will require an exception to Caltrans longitudinal encroachment to be prepared. This facility will not require relocation due to ramp construction. Additional underground utilities include gas and water conduits on De La Cruz Blvd.

8B. Railroad

There is a Union Pacific Railroad (UPRR) grade separation over US 101 just north of the project limits but would not be affected by the Project.

Additional information is provided in the Conceptual Cost Estimate – Right of Way Component in **Attachment E.**

9. STAKEHOLDER INVOLVEMENT

A Project Development Team (PDT) was formed with members from, the City of San Jose, the City of Santa Clara, Caltrans, San Jose International Airport (SJC), the Federal Highway Administration (FHWA), Santa Clara Valley Transportation Authority and the involved design consultants. Agency contacts for information sharing and plan disbursement have been identified within the following organizations: U.S. Army Corps of Engineers, Santa Clara Valley Water District, California Regional Water Quality Control Board, and Metropolitan Transportation Commission and Santa Clara County.

It is anticipated that community involvement/public outreach will be conducted as part of PA/ED so that members of the public will have an opportunity to review and comment on the final design of the proposed project.

The Federal Aviation Administration (FAA) and San Jose Airport have reviewed the project's concept design. The concept design was submitted to FAA in April 2012 and resubmitted in June 2012 with clarifications added in August 2012.

10. ENVIRONMENTAL DETERMINATION/DOCUMENTION

The anticipated environmental document for the proposed is a CEQA Categorical Exemption. The VTA will be the lead agency for the proposed project on CEQA clearance and Caltrans will be the Responsible Agency.

No permits are anticipated for the project. The Project will not result in a discharge of fill into waters of the U.S. or State since the U.S. Army Corps of Engineers (USACE) did not assert jurisdiction over the ditches and culverts mapped within the project area. No authorizations from the USACE or the Regional Water Quality Control Board (RWQCB) are required for this project. Additional information on Stormwater Documentation is provided in **Attachment F** of this report.

The proposed project is located in a highly urbanized area and is not expected to require unusual, exceptional or extended environmental processes. Archaeological testing may be required to determine if archaeological deposits exist within the U.S. 101/De La Cruz Boulevard/Trimble Road interchange. This testing will be evaluated and conducted as part of PA/ED phase.

Burrowing owls (*Athene cunicularia*), a special status species, and other ground-nesting birds are known to live in the project area. Timing of surveys/vegetation removal to avoid nesting bird impacts will need to be considered as part of PA/ED phase and project schedule.

The Preliminary Environmental Analysis Report (PEAR) for this project is provided in **Attachment C.**

11. FUNDING

11A. Capital Outlay Project Estimate

	Estimate		STIP Funds		Other Funds	
	Construction	Right-of-Way	Construction	Right-of-Way	Construction	Right-of-Way
Build Alternative	$23,262,000	$4,683,000	$11,631,000	$0	$11,631,000	$4,683,000

The level of detail available to develop these capital outlay project estimates is only accurate to within the above ranges and is useful for long-range planning purposes only. The capital outlay project estimates should not be used to program or commit State-programmed capital outlay funds.

11B. Capital Outlay Support Estimate

Capital outlay support estimate for programming PA&ED for this project is $582,000.

11C. Agreements

A Cooperative Agreement between VTA and Caltrans will be required for the PA/ED, Right of Way, Design and Construction phases. In addition, a new Maintenance Agreement will be required between Caltrans and the City of San Jose.

12. SCHEDULE

The following is a tentative schedule for the project milestones. The milestone schedule is subject to change per further environmental review and design development.

Project Milestones		Scheduled Delivery Date (Month/Day/Year)
PROGRAM PROJECT	M015	11/01/2012
BEGIN ENVIRONMENTAL	M020	11/01/2012
PA & ED	M200	04/01/2013

Assumptions and constraints for the schedule presented above are as follows:

- As the lead agency for CEQA, VTA will simultaneously submit all technical studies for Caltrans review

The anticipated funding fiscal year for Right-of-Way and Construction is 2014/15.

13. RISKS

Funding sources for the project have not been identified. Delay in securing funds for the project will have a significant impact on the project schedule. To mitigate this risk, the VTA will continuously work with the City of San Jose and Caltrans to secure funds for the project as early as possible.

If Federal funds are involved, the project will also require NEPA approval. This may delay the environmental clearance process and the overall project schedule. The strategy to mitigate this risk is to streamline the CEQA and NEPA process so that the impact to the project schedule is minimized. VTA will also work closely with Caltrans staff to accelerate the approval of the environmental document.

The Risk Register is included as **Attachment H.**

14. FHWA COORDINATION

No use of federal funds is anticipated at this time.

This project is considered to be an Assigned Project in accordance with the current Federal Highway Administration (FHWA) and Department of Transportation (Caltrans) Joint Stewardship and Oversight Agreement.

15. DISTRICT CONTACTS

VTA	
Project Manager	David Kobayashi (408) 321-5892
Lead Environmental	Thomas W. Fitzwater (408) 321-5705
VTA Traffic	Eugene Maeda (408) 321
City of San Jose	
Project Manager	Henry Servin (408) 277-4217
Caltrans	
Project Manager	Dina El-Tawansy (510) 290-7279
R/W Certification	Kristin Schober (510) 286-5327
Consultants	
Project Manager Rajappan & Meyer Consulting Engineers, Inc.	Keith Meyer (408) 280-2772
Project Engineer Rajappan & Meyer Consulting Engineers, Inc.	William Devabalan (408) 280-2772
Traffic Analysis Fehr & Peers Transportation Consultants	Eddie Barrios (925) 930-7100
Environmental LSA Associates	Kristin Nurmela (510) 236-6810

16. PROJECT REVIEWS

Field Review	Date: July 26, 2012
District Maintenance	Date : July 26, 2012
District Traffic Safety Engineer	Date : July 26, 2012
District Safety Review	Date : July 26, 2012
HQ Design Coordinator	Date : April 11, 2012
Project Manager	Date : July 26, 2012

17. ATTACHMENTS

ATTACHMENT A: Location and Vicinity Map
ATTACHMENT B: Layouts, Profile, Typical Cross Sections and Bridge APS
ATTACHMENT C: Preliminary Environmental Analysis Report (PEAR)
ATTACHMENT D: Transportation Planning Scoping Information Sheet
ATTACHMENT E: Conceptual Cost Estimate – Right of Way Data Component
ATTACHMENT F: Stormwater Documentation
ATTACHMENT G: PSR-PDS Survey Needs Questionnaire
ATTACHMENT H: Risk Register
ATTACHMENT I: Quality Management Plan
ATTACHMENT J: Division of Engineering Services PSR-PDS Scoping Checklist
ATTACHMENT K: Design Scoping Index (Cooperative Agreement)

Attachment A
Project Vicinity Map
Route 101/De La Cruz interchange

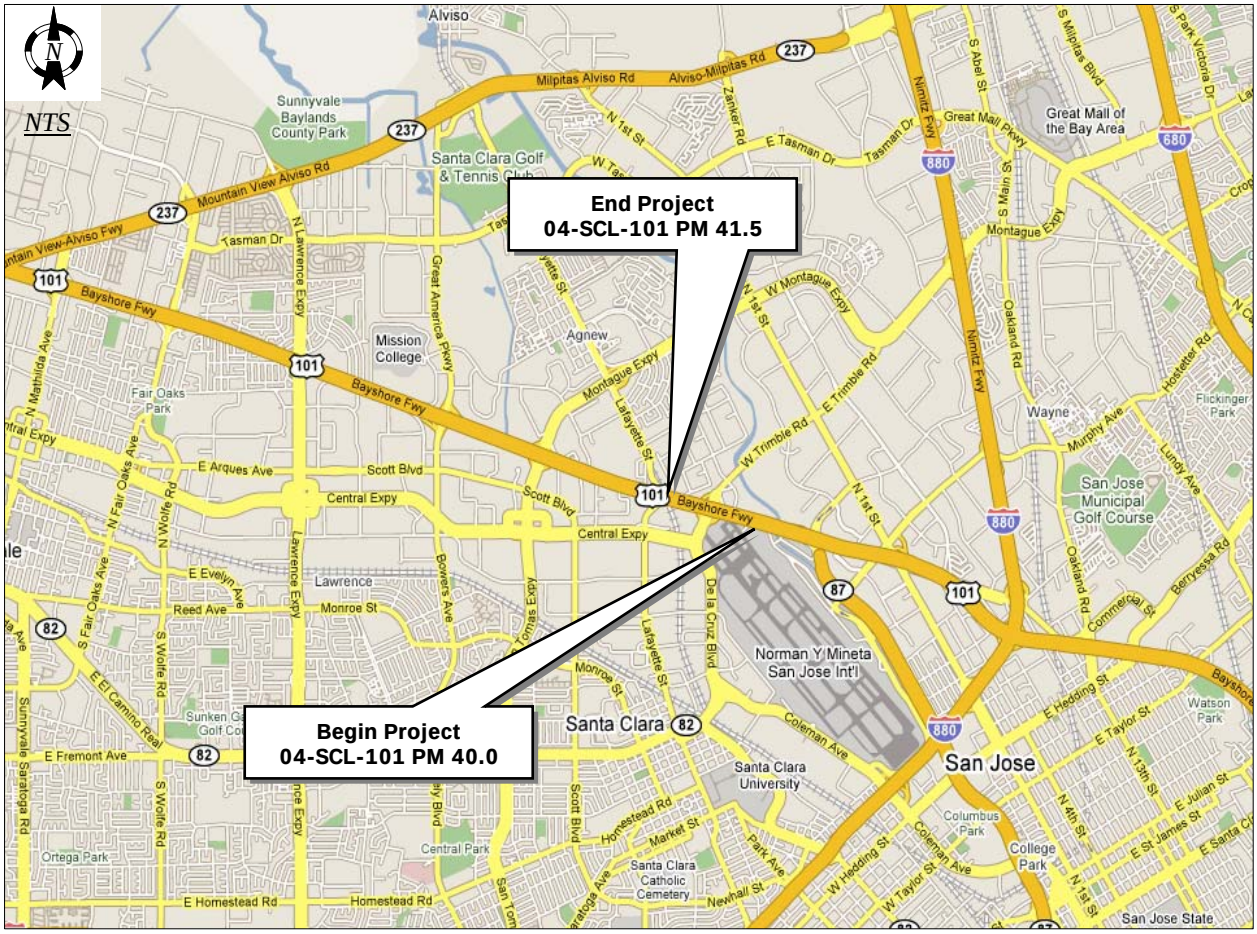

ATTACHMENT B:

Layouts, Profile, Typical Cross Sections and Bridge APS

DIST	COUNTY	LOCATION CODE	POST MILES TOTAL PROJECT	SHEET NO.	TOTAL SHEETS
04	SCL	101	40.0/41.5		

PROFESSIONAL CIVIL ENGINEER

PLANS APPROVAL DATE

REGISTERED PROFESSIONAL ENGINEER No. Exp. CIVIL STATE OF CALIFORNIA

SANTA CLARA VALLEY
TRANSPORTATION AUTHORITY
3331 NORTH 1ST STREET
SAN JOSE, CALIFORNIA 95140

RAJAPPAN & MEYER
CONSULTING ENGINEERS, INC.
1038 LEIGH AVENUE, SUITE 100
SAN JOSE, CALIFORNIA 95126

The State of California or its officers or agents shall not be responsible for the accuracy or completeness of electronic copies of this plan sheet.

CURVE DATA

NO.	RADIUS	DELTA	TANGENT	LENGTH
1	800.00	56°24'43"	429.064	787.660
2	1000.00	19°39'09"	173.202	343.001
3	150.00	78°28'07"	122.487	205.430
4	300.00	30°46'54"	82.582	161.172
5	312.00	24°13'40"	66.966	131.930
6	144.00	163°59'35"	1024.158	412.159
7	3000.00	03°11'29"	83.570	167.096
8	500.00	71°24'17"	359.317	623.123
9	3000.00	03°11'29"	83.570	167.096
10	3000.00	03°11'29"	83.572	167.100
11	300.00	59°06'14"	170.091	309.467
12	250.00	61°37'48"	149.118	268.911
13	140.00	227°37'02"	N/A	556.173
14	3000.00	03°11'29"	83.570	167.096
15	700.00	12°02'59"	73.881	147.216

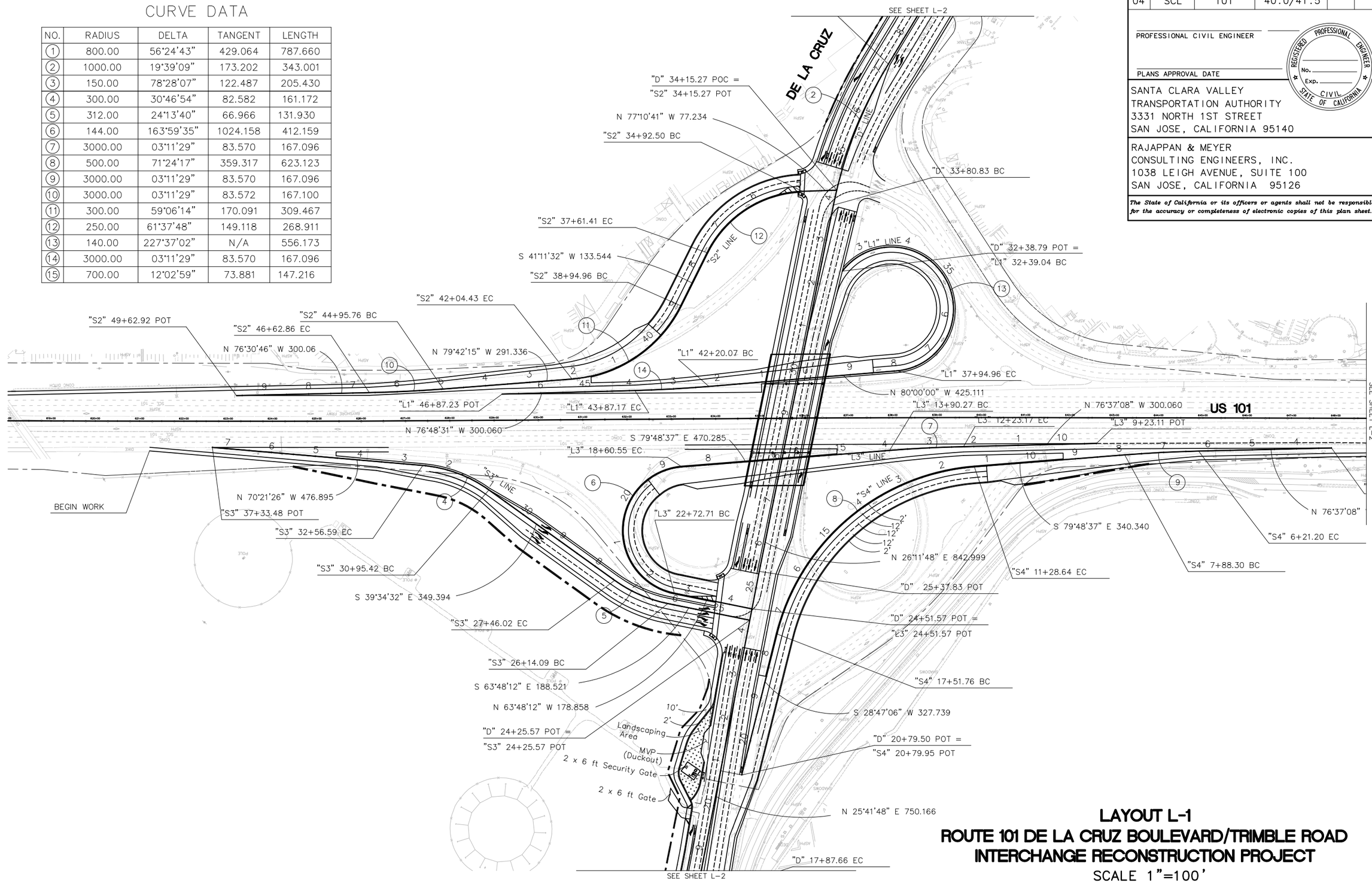

LAYOUT L-1
ROUTE 101 DE LA CRUZ BOULEVARD/TRIMBLE ROAD INTERCHANGE RECONSTRUCTION PROJECT
SCALE 1"=100'

CALCULATED/DESIGNED	BY	D.B.	DATE 11/11
CHECKED	BY	V.R.	11/11
REVISED	BY	DATE REVISED	
S.G	D.B	6/12	8/12

DESIGN OVERSIGHT

STATE OF CALIFORNIA – DEPARTMENT OF TRANSPORTATION

Caltrans

$REQUEST

LAST REVISION 00-00-00

DATE PLOTTED => $DATE
TIME PLOTTED => $TIME

RELATIVE BORDER SCALE IS IN INCHES 0 1 2 3

USERNAME => $USER
DGN FILE => $REQUEST

CU

EA 264700

DIST	COUNTY	LOCATION CODE	POST MILES TOTAL PROJECT	SHEET NO.	TOTAL SHEETS
04	SCL	101	40.0/41.5		

PROFESSIONAL CIVIL ENGINEER

PLANS APPROVAL DATE

REGISTERED PROFESSIONAL ENGINEER No. Exp. CIVIL STATE OF CALIFORNIA

SANTA CLARA VALLEY
TRANSPORTATION AUTHORITY
3331 NORTH 1ST STREET
SAN JOSE, CALIFORNIA 95140

RAJAPPAN & MEYER
CONSULTING ENGINEERS, INC.
1038 LEIGH AVENUE, SUITE 100
SAN JOSE, CALIFORNIA 95126

The State of California or its officers or agents shall not be responsible for the accuracy or completeness of electronic copies of this plan sheet.

CURVE DATA

NO.	RADIUS	DELTA	TANGENT	LENGTH
1	800.00	56°24'43"	429.064	787.660
2	1000.00	19°39'09"	173.202	343.001
3	150.00	78°28'07"	122.487	205.430
4	300.00	30°46'54"	82.582	161.172
5	312.00	24°13'40"	66.966	131.930
6	144.00	163°59'35"	1024.158	412.159
7	3000.00	03°11'29"	83.570	167.096
8	500.00	71°24'17"	359.317	623.123
9	3000.00	03°11'29"	83.570	167.096
10	3000.00	03°11'29"	83.572	167.100
11	300.00	59°06'14"	170.091	309.467
12	250.00	61°37'48"	149.118	268.911
13	140.00	227°37'02"	N/A	556.173
14	3000.00	03°11'29"	83.570	167.096
15	700.00	12°02'59"	73.881	147.216

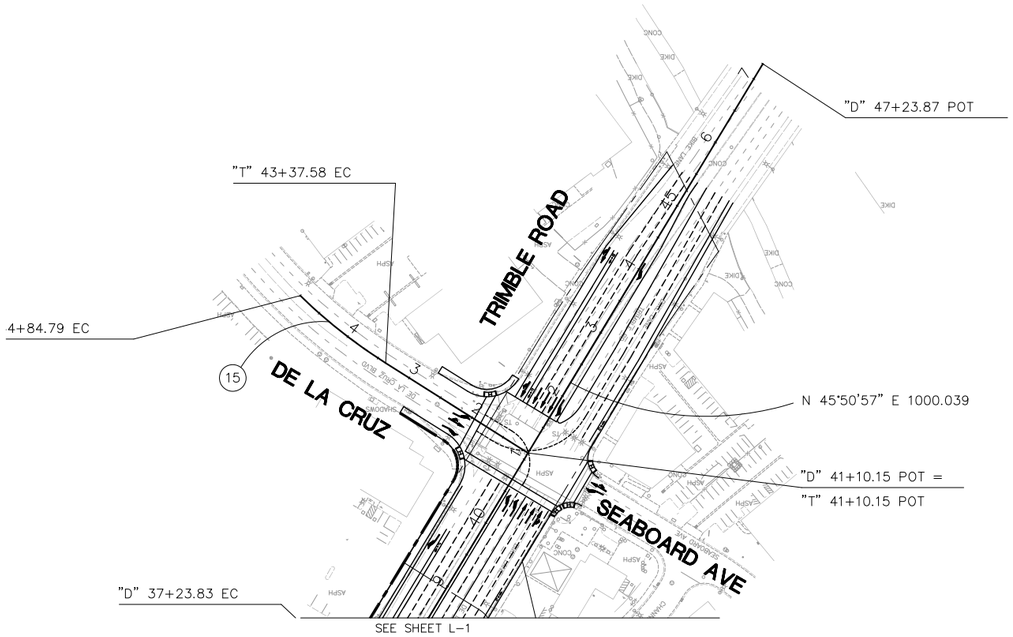

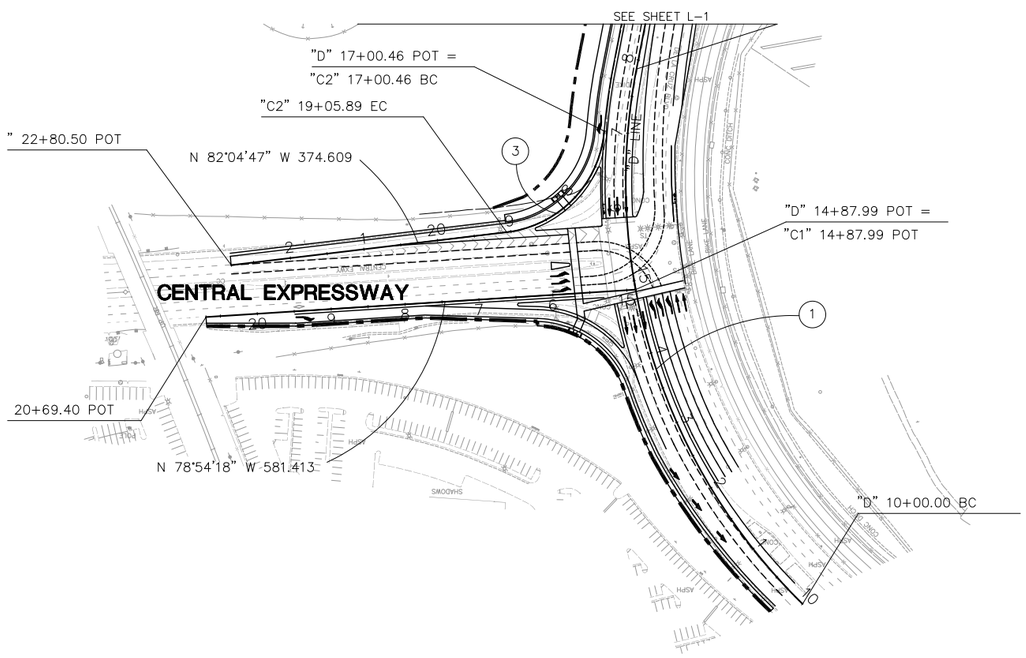

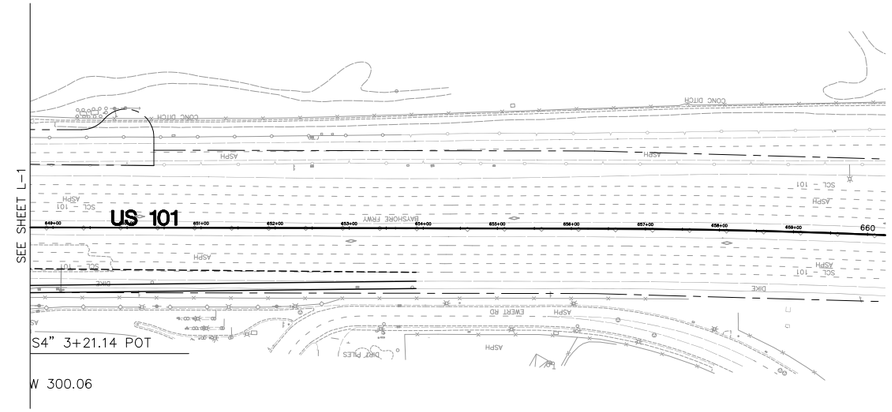

LAYOUT L-2
ROUTE 101 DE LA CRUZ BOULEVARD/TRIMBLE ROAD INTERCHANGE RECONSTRUCTION PROJECT

SCALE 1"=100'

	DATE	REVISED	BY
D.B.	11/11	DATE	REVISED
V.R.	11/11		

CALCULATED/DESIGNED BY
CHECKED BY

DESIGN OVERSIGHT

STATE OF CALIFORNIA – DEPARTMENT OF TRANSPORTATION

Caltrans

$REQUEST

LAST REVISION 00-00-00
DATE PLOTTED => $DATE
TIME PLOTTED => $TIME

RELATIVE BORDER SCALE IS IN INCHES 0 1 2 3

USERNAME => $USER
DGN FILE => $REQUEST

CU

EA 264700

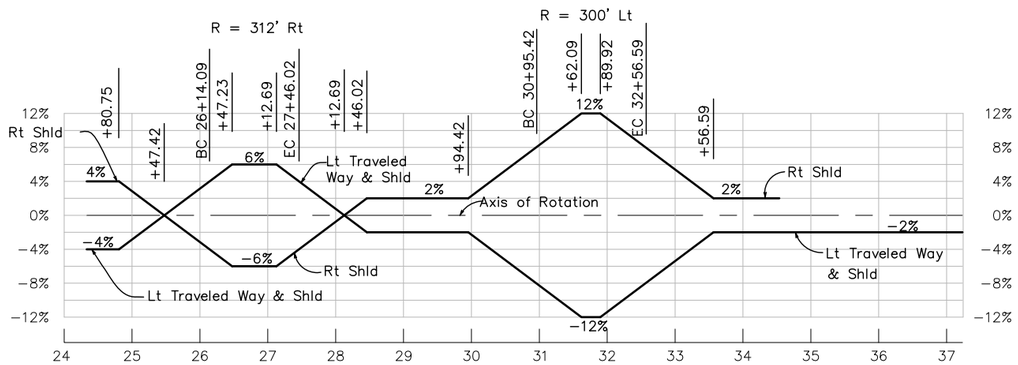

SUPERELEVATION DIAGRAM
"S3" LINE – SB OFF-RAMP

Scale: Horizontal 1"=100'

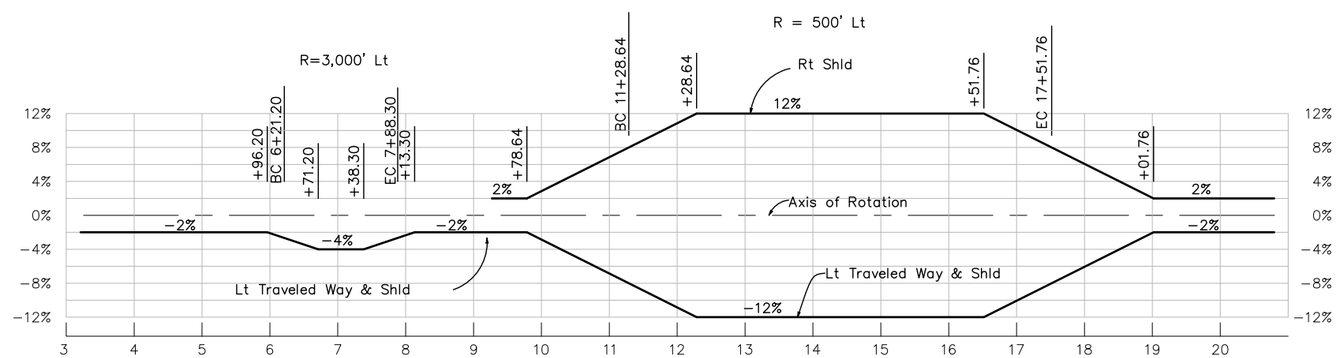

SUPERELEVATION DIAGRAM
"S4" LINE – SB ON-RAMP

Scale: Horizontal 1"=100'

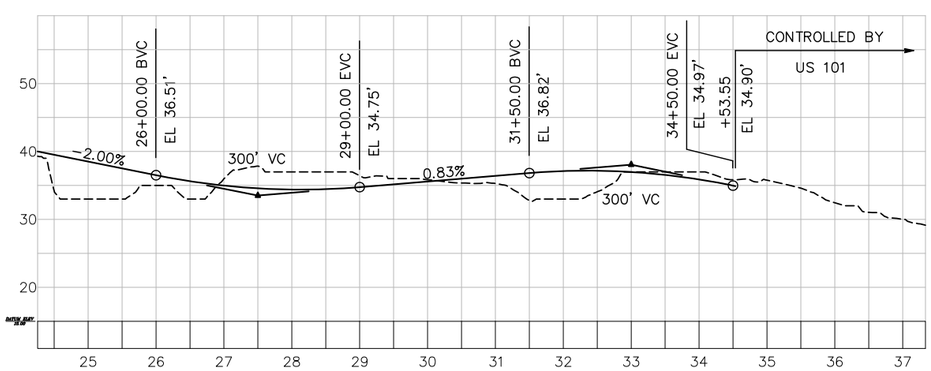

PROFILE
"S3" LINE – SB OFF-RAMP

Scale: Horizontal 1" = 100'
Vertical 1" = 10'

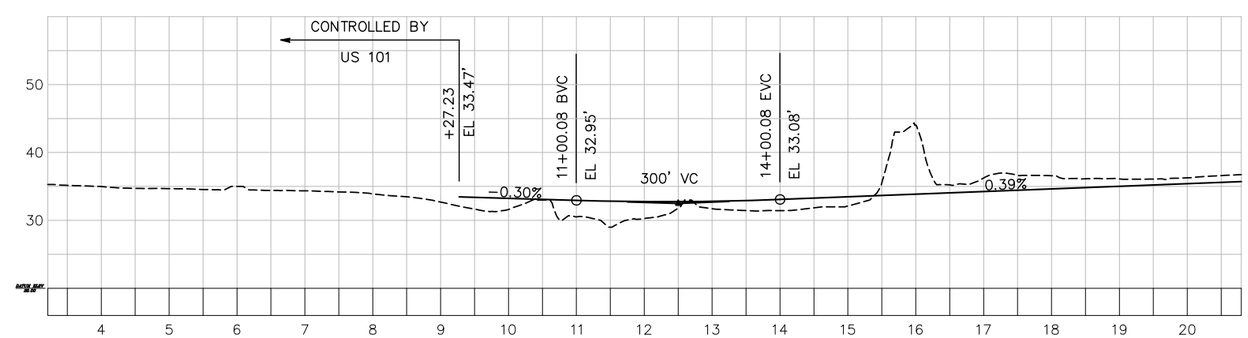

PROFILE
"S4" LINE – SB ON-RAMP

Scale: Horizontal 1" = 100'
Vertical 1" = 10'

Rajappan&Meyer
CONSULTING ENGINEERS INC
1038 Leigh Avenue, Suite 100 San Jose, CA 95126
Phone: 408.280.2772 Fax: 408.280.6803

DESIGNED BY D.B.	APPROVED ON	PROJECT NO.	SHEET
CKD. BY G.M.	BY	26004	1
DATE 08/01/12		DWG NAME	OF
SCALE AS SHOWN	RCE NO.	PROFILE	3

GEOMETRIC APPROVAL DRAWING
ROUTE 101/DE LA CRUZ
TRIMBLE/INTERCHANGE
RECONSTRUCTION

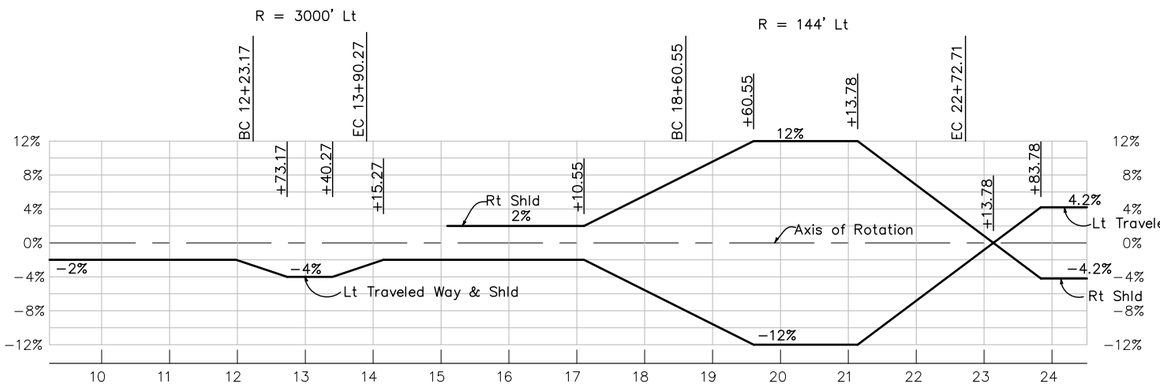

SUPERELEVATION DIAGRAM
"L3" LINE – SB LOOP ON-RAMP

Scale: Horizontal 1"=100'

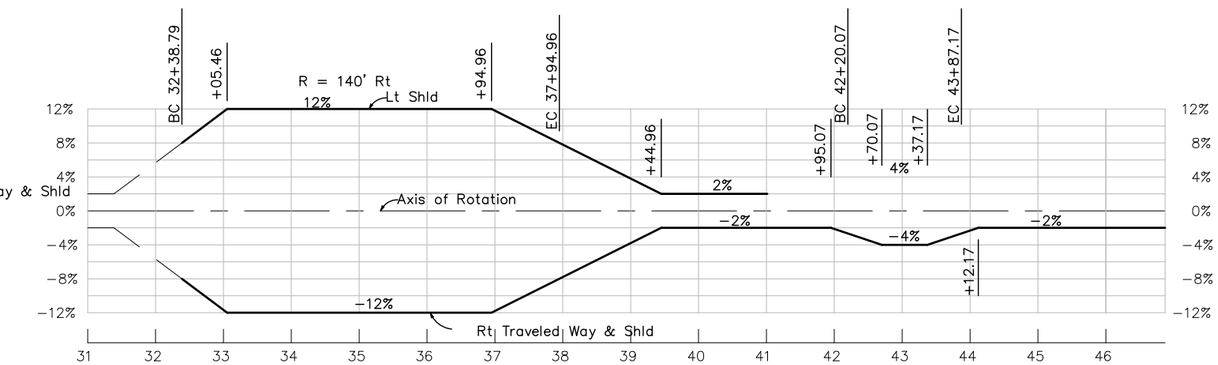

SUPERELEVATION DIAGRAM
"L1" LINE – NB LOOP ON-RAMP

Scale: Horizontal 1"=100'

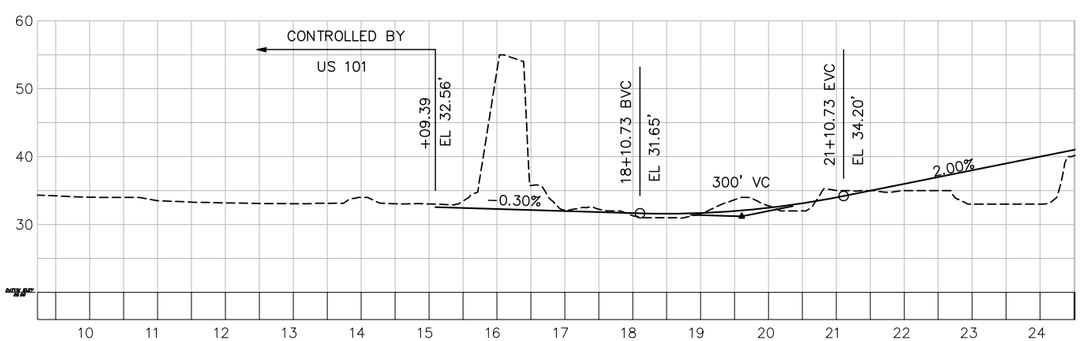

PROFILE
"L3" LINE – SB LOOP ON-RAMP

Scale: Horizontal 1" = 100'
Vertical 1" = 10'

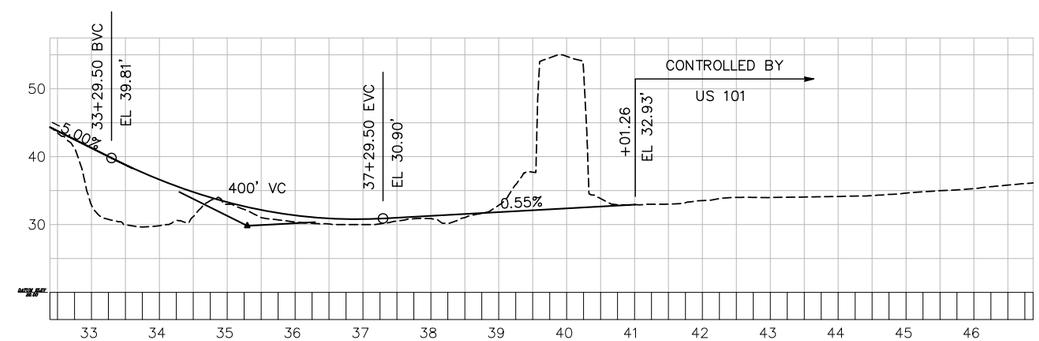

PROFILE
"L1" LINE – NB LOOP ON-RAMP

Scale: Horizontal 1" = 100'
Vertical 1" = 10'

Rajappan&Meyer
CONSULTING ENGINEERS INC
1038 Leigh Avenue, Suite 100 San Jose, CA 95126
Phone: 408.280.2772 Fax: 408.280.6803

DESIGNED BY D.B.	APPROVED ON	PROJECT NO. 26004	SHEET 2
CKD. BY G.M.	BY	DWG NAME PROFILE	OF 3
DATE 08/01/12			
SCALE AS SHOWN	RCE NO.		

GEOMETRIC APPROVAL DRAWING
ROUTE 101/DE LA CRUZ
TRIMBLE/INTERCHANGE
RECONSTRUCTION

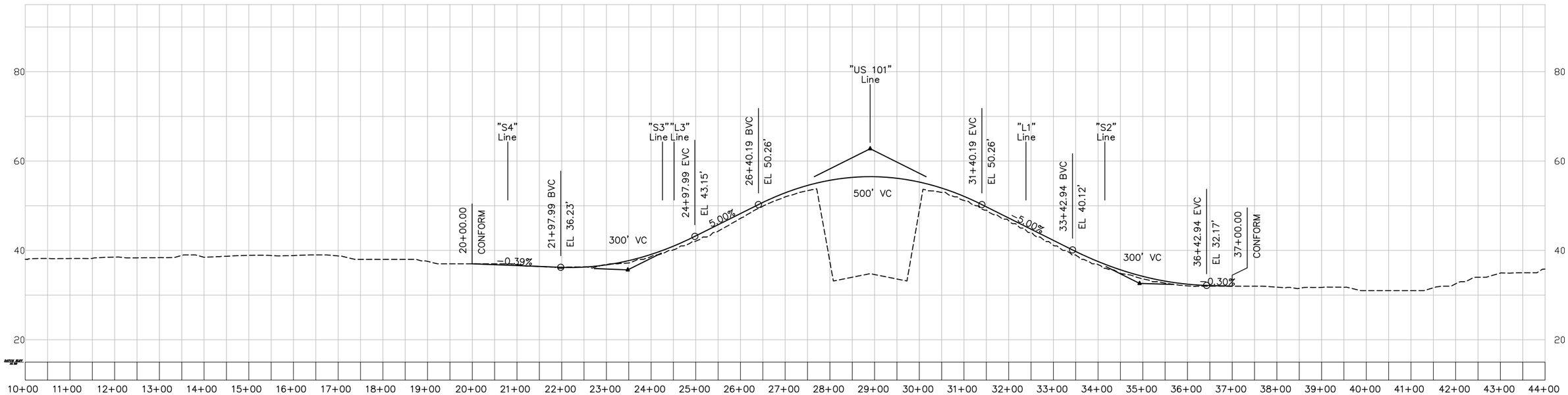

PROFILE
"D" LINE – DE LA CRUZ

Scale: Horizontal 1" = 100'
Vertical 1" = 10'

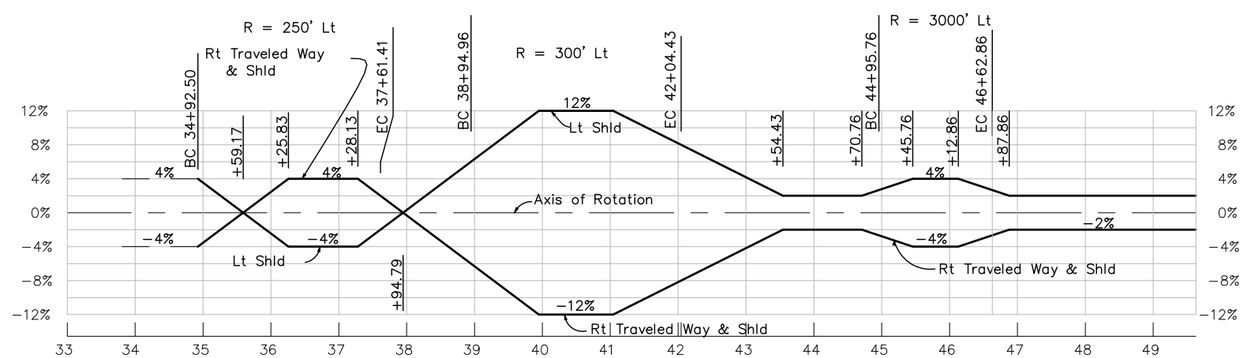

SUPERELEVATION DIAGRAM
"S2" LINE – NB ON-RAMP

Scale: Horizontal 1"=100'

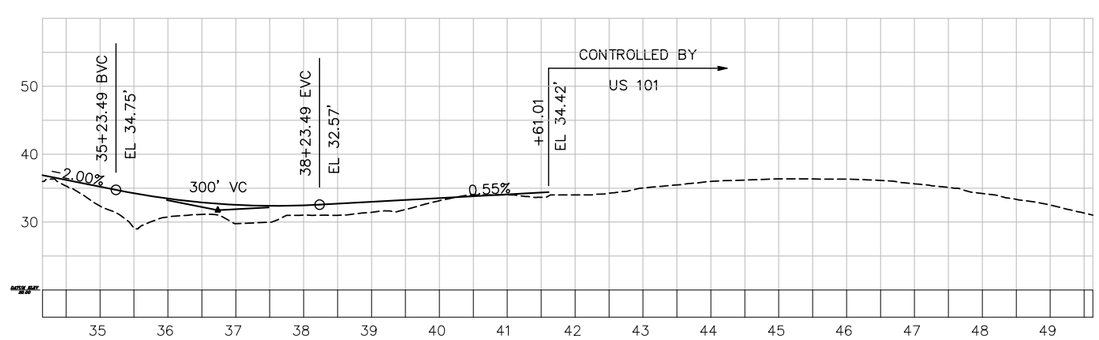

PROFILE
"S2" LINE – NB ON-RAMP

Scale: Horizontal 1" = 100'
Vertical 1" = 10'

Rajappan&Meyer
CONSULTING ENGINEERS INC
1038 Leigh Avenue, Suite 100 San Jose, CA 95126
Phone: 408.280.2772 Fax: 408.280.6803

DESIGNED BY D.B.	APPROVED ON	PROJECT NO. 26004	SHEET 3
CKD. BY G.M.	BY	DWG NAME PROFILE	OF 3
DATE 08/01/12			
SCALE AS SHOWN	RCE NO.		

GEOMETRIC APPROVAL DRAWING
ROUTE 101/DE LA CRUZ
TRIMBLE/INTERCHANGE
RECONSTRUCTION

DIST	COUNTY	LOCATION CODE	POST MILES TOTAL PROJECT	SHEET NO.	TOTAL SHEETS
04	SCL	101	40.0/41.5		

PROFESSIONAL CIVIL ENGINEER

PLANS APPROVAL DATE

REGISTERED PROFESSIONAL ENGINEER No. Exp. CIVIL STATE OF CALIFORNIA

SANTA CLARA VALLEY
TRANSPORTATION AUTHORITY
3331 NORTH 1ST STREET
SAN JOSE, CALIFORNIA 95140

RAJAPPAN & MEYER
CONSULTING ENGINEERS, INC.
1038 LEIGH AVENUE, SUITE 100
SAN JOSE, CALIFORNIA 95126

The State of California or its officers or agents shall not be responsible for the accuracy or completeness of electronic copies of this plan sheet.

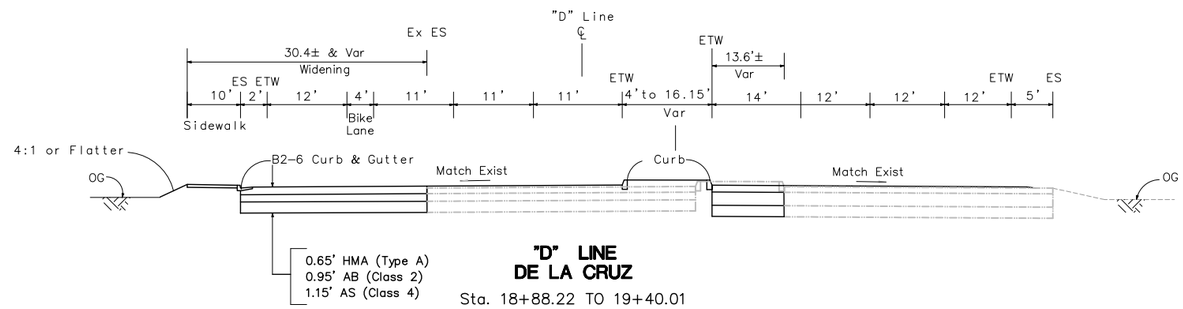

"D" LINE
DE LA CRUZ
Sta. 18+88.22 TO 19+40.01

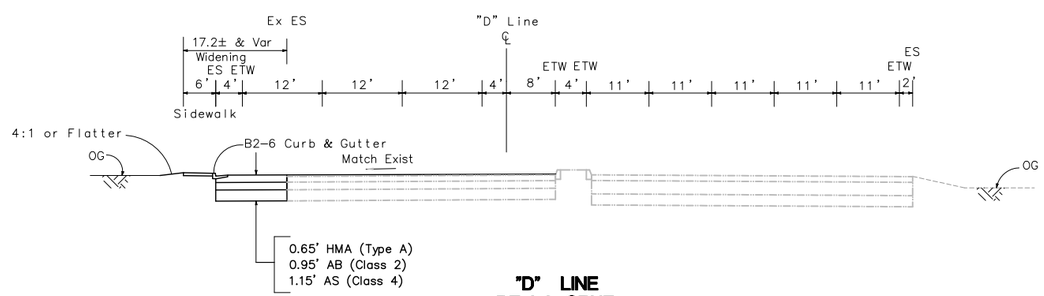

"D" LINE
DE LA CRUZ
Sta. 12+74.81 TO 13+65.74

CROSS SECTIONS X-1
ROUTE 101 DE LA CRUZ BOULEVARD/TRIMBLE ROAD INTERCHANGE RECONSTRUCTION PROJECT

NO SCALE

CALCULATED/ DESIGNED BY	D.B.	DATE 11/11	REVISED BY	S.G
CHECKED BY	V.R.	11/11	DATE REVISED	6/12

DESIGN OVERSIGHT

STATE OF CALIFORNIA - DEPARTMENT OF TRANSPORTATION

Caltrans

$REQUEST

LAST REVISION 00-00-00 DATE PLOTTED => $DATE TIME PLOTTED => $TIME

RELATIVE BORDER SCALE IS IN INCHES 0 1 2 3

USERNAME => $USER
DGN FILE => $REQUEST

CU

EA 264700

DIST	COUNTY	LOCATION CODE	POST MILES TOTAL PROJECT	SHEET NO.	TOTAL SHEETS
04	SCL	101	40.0/41.5		

PROFESSIONAL CIVIL ENGINEER

PLANS APPROVAL DATE

REGISTERED PROFESSIONAL ENGINEER No. Exp. CIVIL STATE OF CALIFORNIA

SANTA CLARA VALLEY
TRANSPORTATION AUTHORITY
3331 NORTH 1ST STREET
SAN JOSE, CALIFORNIA 95140

RAJAPPAN & MEYER
CONSULTING ENGINEERS, INC.
1038 LEIGH AVENUE, SUITE 100
SAN JOSE, CALIFORNIA 95126

The State of California or its officers or agents shall not be responsible for the accuracy or completeness of electronic copies of this plan sheet.

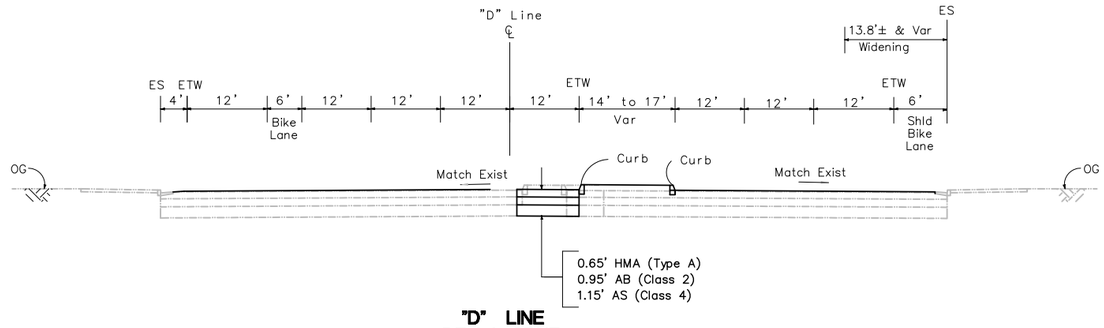

"D" LINE
DE LA CRUZ
Sta. 42+02.26 TO 44+04.16

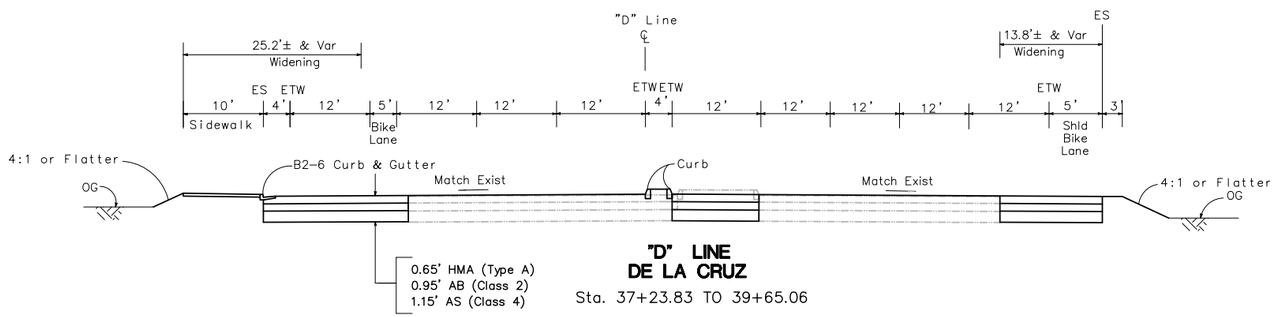

"D" LINE
DE LA CRUZ
Sta. 37+23.83 TO 39+65.06

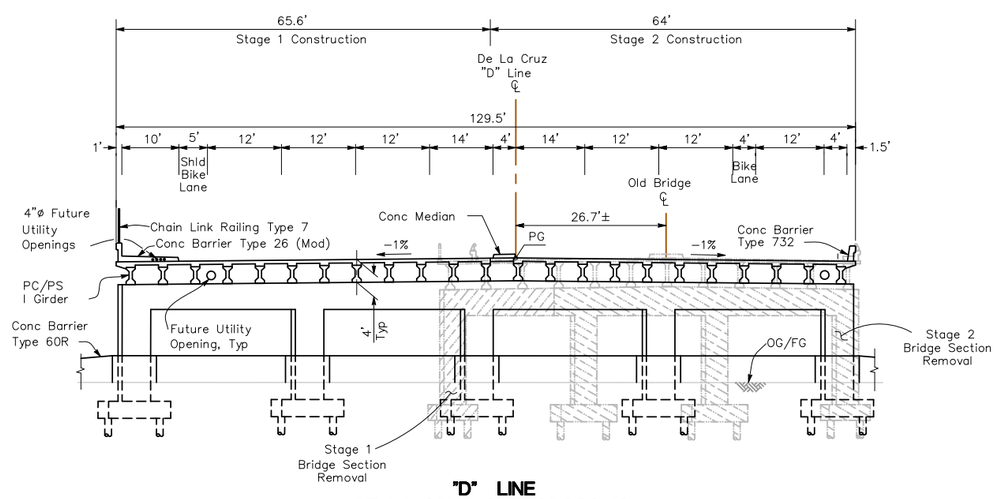

"D" LINE
DE LA CRUZ OVERCROSSING
Sta. 27+35.21 TO 30+36.64

CROSS SECTIONS X-2
ROUTE 101 DE LA CRUZ BOULEVARD/TRIMBLE ROAD INTERCHANGE RECONSTRUCTION PROJECT

NO SCALE

CALCULATED/DESIGNED BY	D.B.	DATE 11/11	REVISED BY
CHECKED BY	V.R.	11/11	DATE REVISED
			S.G 6/12

DESIGN OVERSIGHT

STATE OF CALIFORNIA - DEPARTMENT OF TRANSPORTATION
Caltrans

$REQUEST

LAST REVISION 00-00-00
DATE PLOTTED => $DATE
TIME PLOTTED => $TIME

RELATIVE BORDER SCALE IS IN INCHES 0 1 2 3

USERNAME => $USER
DGN FILE => $REQUEST

CU

EA 264700

DIST	COUNTY	LOCATION CODE	POST MILES TOTAL PROJECT	SHEET NO.	TOTAL SHEETS
04	SCL	101	40.0/41.5		

PROFESSIONAL CIVIL ENGINEER

PLANS APPROVAL DATE

REGISTERED PROFESSIONAL ENGINEER No. Exp. CIVIL STATE OF CALIFORNIA

SANTA CLARA VALLEY
TRANSPORTATION AUTHORITY
3331 NORTH 1ST STREET
SAN JOSE, CALIFORNIA 95140

RAJAPPAN & MEYER
CONSULTING ENGINEERS, INC.
1038 LEIGH AVENUE, SUITE 100
SAN JOSE, CALIFORNIA 95126

The State of California or its officers or agents shall not be responsible for the accuracy or completeness of electronic copies of this plan sheet.

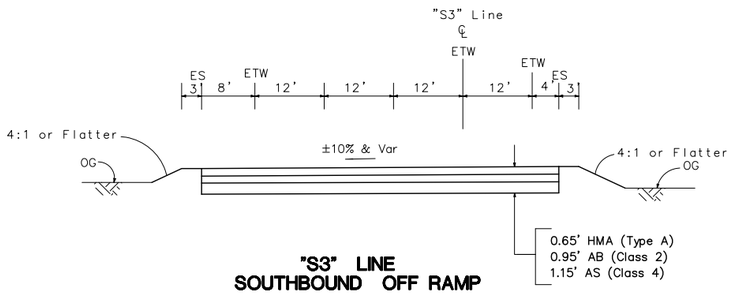

"S3" LINE
SOUTHBOUND OFF RAMP
Sta. 25+07 TO 29+75.42

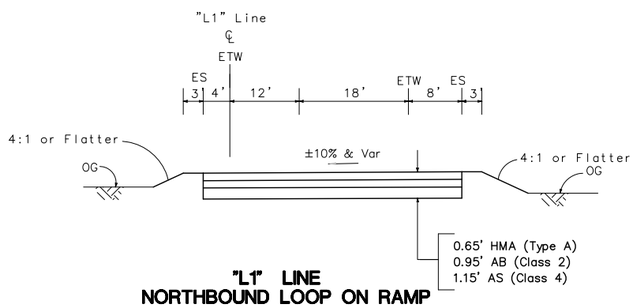

"L1" LINE
NORTHBOUND LOOP ON RAMP
Sta. 32+47.02 TO 37+81

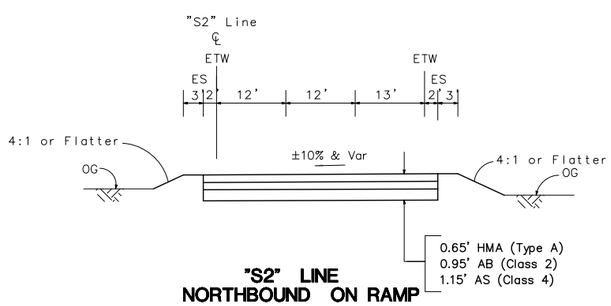

"S2" LINE
NORTHBOUND ON RAMP
Sta. 34+98.81 TO 44+33.07

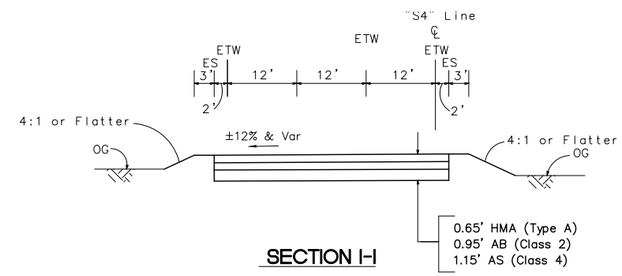

SECTION I-I

"S4" LINE
SOUTHBOUND ON RAMP
Sta. 13+56.79 TO 20+79.50

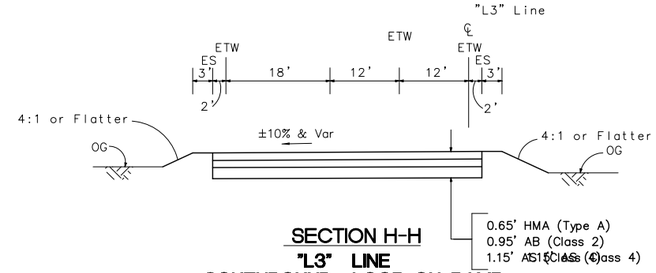

SECTION H-H

"L3" LINE
SOUTHBOUND LOOP ON RAMP
Sta. 23+68.41 TO 19+38.12

CROSS SECTIONS X-3
ROUTE 101 DE LA CRUZ BOULEVARD/TRIMBLE ROAD INTERCHANGE RECONSTRUCTION PROJECT

NO SCALE

S.G	6/12		
BY	REVISED	BY	REVISED
DATE	REVISED	DATE	REVISED
D.B.	11/11	V.R.	11/11
CALCULATED/DESIGNED	BY	CHECKED	BY

DESIGN OVERSIGHT

STATE OF CALIFORNIA – DEPARTMENT OF TRANSPORTATION

Caltrans

$REQUEST

LAST REVISION 00-00-00
DATE PLOTTED => $DATE
TIME PLOTTED => $TIME

RELATIVE BORDER SCALE IS IN INCHES 0 1 2 3

USERNAME => $USER
DGN FILE => $REQUEST

CU

EA 264700

DIST	COUNTY	LOCATION CODE	POST MILES TOTAL PROJECT	SHEET NO.	TOTAL SHEETS
04	SCL	101	40.0/41.5		

PROFESSIONAL CIVIL ENGINEER

PLANS APPROVAL DATE

REGISTERED PROFESSIONAL ENGINEER No. Exp. CIVIL STATE OF CALIFORNIA

SANTA CLARA VALLEY
TRANSPORTATION AUTHORITY
3331 NORTH 1ST STREET
SAN JOSE, CALIFORNIA 95140

RAJAPPAN & MEYER
CONSULTING ENGINEERS, INC.
1038 LEIGH AVENUE, SUITE 100
SAN JOSE, CALIFORNIA 95126

The State of California or its officers or agents shall not be responsible for the accuracy or completeness of electronic copies of this plan sheet.

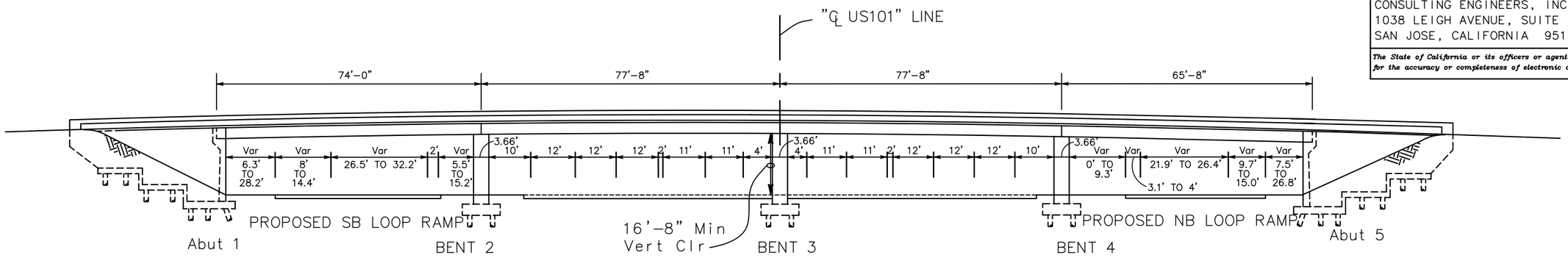

"US 101" AT NEW DE LA CRUZ BLVD OC
(WITH FUTURE EXPRESS LANES)

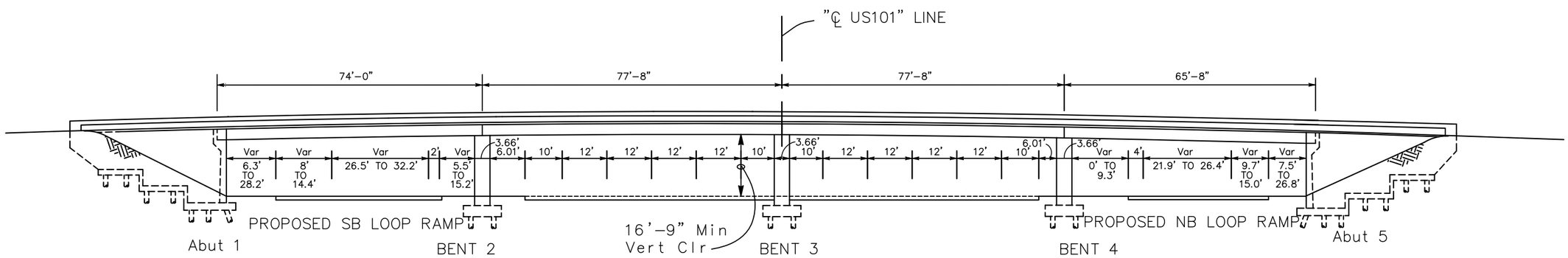

"US 101" AT NEW DE LA CRUZ BLVD OC
(WITHOUT EXPRESS LANES)

CROSS SECTIONS X-4
ROUTE 101 DE LA CRUZ BOULEVARD/TRIMBLE ROAD INTERCHANGE RECONSTRUCTION PROJECT

NO SCALE

CALCULATED/DESIGNED BY	D.B.	DATE 11/11	REVISED BY
CHECKED BY	V.R.	11/11	DATE REVISED
			S.G
			6/12

DESIGN OVERSIGHT

STATE OF CALIFORNIA - DEPARTMENT OF TRANSPORTATION

Caltrans

$REQUEST

LAST REVISION 00-00-00

DATE PLOTTED => $DATE
TIME PLOTTED => $TIME

RELATIVE BORDER SCALE IS IN INCHES 0 1 2 3

USERNAME => $USER
DGN FILE => $REQUEST

CU

EA 264700

DIST	COUNTY	ROUTE	POST MILES TOTAL PROJECT
04	SCL	101	40.0/41.5

SANTA CLARA VALLEY TRANSPORTATION AUTHORITY
3331 N. FIRST STREET
SAN JOSE, CA 95134

RAJAPPAN & MEYER CONSULTING ENGINEERS, INC.
1038 LEIGH AVE, SUITE 100
SAN JOSE, CA 95126

VEHICULAR TRAFFIC

1. ___ New alignment. No traffic at the site
2. ___ Traffic will be detoured away from the site
3. X Traffic will be carried on the structure
   Stage construction will be required
4. X Traffic will pass under the structure
   on De La Cruz Blvd
   - A. X No falsework allowed over traffic
   - B. ___ Falsework opening(s) required:
   - C. ___ Temporary traffic lane reduction needed for footing excavation

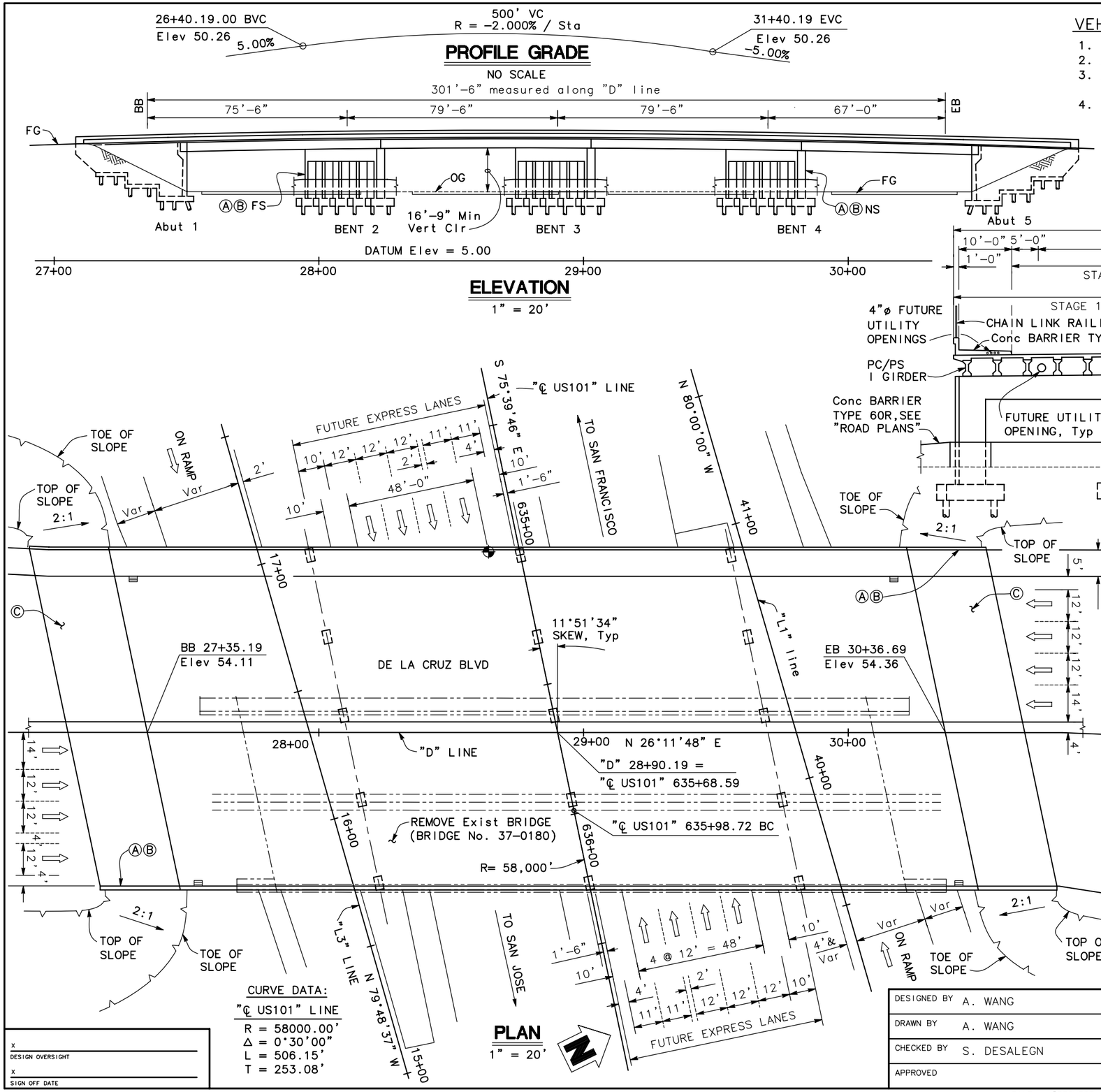

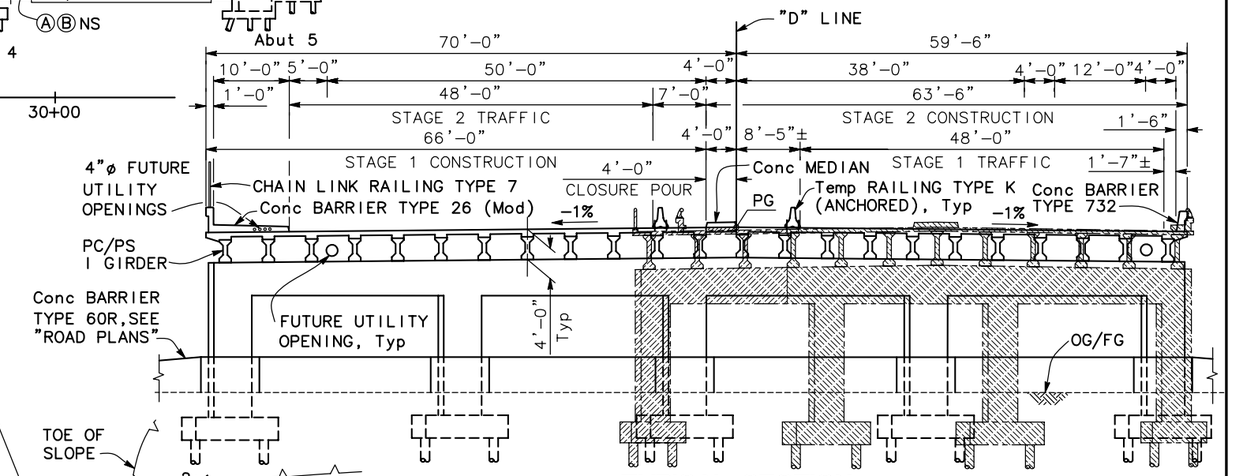

LEGEND:

- Ⓐ Paint 'DE LA CRUZ BLVD OC' and year completed
- Ⓑ Paint 'Bridge No. 37-0180'
- Ⓒ Structure Approach Slab Type N(30S)
- Indicates point of minimum vertical clearance
- Indicates Deck Drain Type D-1
- Bridge Removal (Stage 1)
- Bridge Removal (Stage 2)
- Closure Pour

Date of estimate	=	08/15/12
Structure Depth	=	4'-0"
Length	=	301'-6"
Width	=	129'-6"
Area	=	39,044 ft²
Cost/ft² including 10% Mobilization & 25% Contingency	=	$ 205.56
Bridge Total Cost	=	$ 8,026,000
Bridge Removal (Contingencies Included)	=	$ 282,000
Bridge Total Cost	=	$ 8,308,000

DESIGNED BY	A. WANG	DATE	08/12
DRAWN BY	A. WANG	DATE	08/12
CHECKED BY	S. DESALEGN	DATE	08/12
APPROVED		DATE	

A. WANG
PROJECT ENGINEER

ADVANCE PLANNING STUDY

DE LA CRUZ BLVD OC (REPLACE)

BRIDGE NO. 37-0180	UNIT: X
SCALE: AS NOTED	PROJECT NUMBER & PHASE: X

X
DESIGN OVERSIGHT

X
SIGN OFF DATE

PREPARED FOR THE STATE OF CALIFORNIA – DEPARTMENT OF TRANSPORTATION

USERNAME => $USER
DATE PLOTTED => $DATE
TIME PLOTTED => $TIME

ATTACHMENT C:

Preliminary Environmental Analysis Report (PEAR)

PRELIMINARY ENVIRONMENTAL ANALYSIS REPORT

1. *PROJECT INFORMATION*

District	County	U.S.	PM	EA
4	Santa Clara	101	40.0/41.5	04-234-26470K
Project Title: U.S. 101/De La Cruz Boulevard/Trimble Road Interchange Improvements				
Caltrans Project Manager Dina A. El-Tawansy			**Phone #** 510-286-7236	
Project Engineer Rajappan & Meyer Consulting Engineers, Inc./Keith Meyer			**Phone #** 408-280-2772	
VTA Project Manager David Kobayashi			**Phone #** 408-321-5892	
VTA Environmental Programs and Resources Manager Thomas Fitzwater			**Phone #** 408-321-5705	
PEAR Preparer LSA Associates, Inc./Kristin Nurmela			**Phone #** 510-236-6810	

2. *PROJECT DESCRIPTION*

INTRODUCTION

The Santa Clara Valley Transportation Authority (VTA) and the City of San Jose propose to make the following key improvements to relieve existing and future traffic congestion at the U.S. 101/De La Cruz Boulevard/Trimble Road interchange:

- Reconstruct the existing three-quadrant cloverleaf interchange to a partial clover leaf design (Type L-9);
- Widen the overcrossing structure from four lanes to eight lanes;
- Realign the southbound off and on ramps from and to U.S. 101/De La Cruz Boulevard to facilitate a “bike and pedestrian friendly design;”
- Realign the northbound on ramps from U.S. 101/De La Cruz Boulevard to facilitate a “bike and pedestrian friendly design;” and
- Construct improvements at adjacent intersections on Trimble Road and De La Cruz Boulevard.

The proposed project will improve traffic operations and safety for bicyclists and pedestrians as well as motorists traveling across the interchange. The project will also improve traffic operations to the southbound merge onto U.S. 101.

PURPOSE AND NEED

Congestion in the vicinity of the U.S. 101 De La Cruz Boulevard/Trimble Road Interchange in San Jose exists today during the peak commute hours and is anticipated to increase in the future due to background growth, particularly in North San Jose and Santa Clara areas of Santa Clara County. The project purpose and need are described below:

Purpose. The purpose of the project is as follows:

1) To improve traffic operations at the U.S. 101/De La Cruz Boulevard/Trimble Road Interchange, including through movements crossing over U.S. 101 and turning movements at the interchange.
2) To improve mobility and safety for bicyclists and pedestrians across the interchange;
3) To improve the interchange design to enhance safety for vehicles merging onto southbound U.S. 101 within the De La Cruz Boulevard interchange;
4) To improve the structural adequacy of the existing bridge structure.

Need. The project is needed to relieve existing and future traffic congestion, improve traffic operations and safety, and to improve bicycle and pedestrian safety, as described below.

- The existing local road intersections at the east and west ends of the interchange currently operate at Level of Service (LOS) F in the PM Peak Hour and are anticipated to operate at unacceptable conditions in the future. The City of San Jose General Plan plans for intensification of the land use density along the North First Street and Zanker Road corridors in northern San Jose. This intensification of use will place greater demands on key access routes to North First Street, including Trimble Road/De La Cruz Boulevard at U.S. 101.
- Currently, there is no pedestrian/bicycle access on Trimble Road/De La Cruz Boulevard between the interchange and the Central Expressway. The existing interchange does not meet federal and state policies and local guidelines related to Complete Streets (e.g. H.R. 1780, AB 1354 – Complete Streets Act of 2008, Caltrans Directive DD-64-R1 – Complete Streets: Integrating the Transportation System, and VTA Bicycle Technical Guidelines), where roadway improvement projects are to be designed for multimodal use in balance with community goals, addressing the safety and mobility needs of bicyclists, pedestrians and transit users of all ages and abilities. A continuous sidewalk on the north side of the overcrossing and bike lanes in both directions through the interchange should be provided to accommodate pedestrians and bicyclists in addition to motorists. Bicyclists traveling in the southbound and northbound directions on De La Cruz Boulevard must negotiate the high speed right turn lanes to the on-ramps of northbound and southbound U.S.

101. The geometric configuration at this location is not bicycle/pedestrian friendly. In addition, this roadway segment is classified by VTA as a corridor of bicycle travel significance that is identified as a "Cross County Bicycle Corridor" (CCBC) in the 2008 Santa Clara County Bicycle Plan.

- Accident rates for the southbound on and off loop ramps are 40 to 60 percent higher than the state average for similar facilities. This can be attributed to the short weave distance for those ramps on southbound U.S. 101.
- The U.S. 101/De La Cruz Boulevard/Trimble Road overcrossing structure (Bridge No. 370180) was built in 1961 and had a minimum structural sufficiency rating of 80 in 2009. This bridge does not meet current design standards and will need to be replaced in the near future.

ALTERNATIVES

Two alternatives are being studied, namely the Build and No Build alternatives. The primary elements of the Build Alternative, which consists of reconstructing the existing three-quadrant cloverleaf interchange to a Type L-9 partial cloverleaf interchange, include:

- Reconstruction of the existing De La Cruz Boulevard Bridge Overcrossing (OC) from a four-lane to eight-lane facility, which includes exist lanes to the northbound and southbound loop on-ramps. Reconstruction would use pre-cast California super-girders to reduce structure depth, to provide standard vertical clearance over U.S. 101 and to allow for construction under the air space restriction of the adjacent Mineta San Jose International Airport.
- Modification of the existing De La Cruz Boulevard to provide an additional through lane in each direction from Trimble Road to Central Expressway.
- Reconstruction of the U.S. 101 northbound on-ramp from De La Cruz Boulevard to provide improved bicycle lane and pedestrian crossing safety.
- Modification of the northbound loop on-ramp from De La Cruz Boulevard to accommodate the OC bridge widening.
- Modification of the southbound loop on-ramp from De La Cruz Boulevard to accommodate the OC bridge widening, and to provide a right-angle intersection for improved bicycle lane and pedestrian crossing safety.
- Construction of a new intersection at the terminus of the U.S. 101 southbound off-ramp at De La Cruz Boulevard.
- Reconstruction of the southbound on-ramp from De La Cruz Boulevard to provide improved bicycle lane safety.
- Provision of an additional lane to the northbound U.S. 101 diagonal and loop on-ramps, and also to the southbound U.S. 101 loop on-ramp. The southbound off-ramp will terminate at De La Cruz Boulevard with four lanes at the ramp intersection.
- Provision of a pedestrian sidewalk on the north side of De La Cruz Boulevard between Trimble Road and Central Expressway.
- Provision of Class II bicycle lane striping in both directions on De La Cruz Boulevard between Trimble Road and Central Expressway.

- Provision of reconstructed ramp metering systems and high occupancy vehicle (HOV) bypass lanes at each on-ramp.
- Reconstruction of the intersection of De La Cruz Boulevard and Trimble Road to provide bike lanes and additional turn lanes.
- Reconstruction of the intersection of De La Cruz Boulevard and Central Expressway to provide bike lanes, and additional through and turn lanes. Provision of lane transition as needed on Central Expressway.
- Provision of low height roadway and ramp safety lighting and signing in compliance with Federal Aviation Administration (FAA) glide slope clearance requirements.
- Provision of island and fence for a portion of the Mineta San Jose International Airport instrument landing system (ILS) light system that crosses De La Cruz Boulevard.
- Modification of existing drainage systems to accommodate the interchange improvements and implement storm water quality best management practices (BMPs).

The No-Build alternative was examined as a baseline for comparison between the Build alternative and not building the project. The No-Build alternative proposes no modifications to the current US 101/De La Cruz Boulevard/Trimble Road interchange other than routine maintenance and rehabilitation of the facility and any currently planned and programmed projects within the area. This alternative would result in continued deterioration of traffic conditions with the additional forecasted traffic demand in the future. This alternative does not meet the need and purpose of the proposed project. Rather, it provides a basis for the analysis and evaluation of the Build Alternative.

FUNDING

The estimated total cost for the environmental documentation and project report is $600,000. The total proposed budget for the project, including soft costs, construction and right-of-way acquisition, is approximately $39,769,000 in 2011 dollars. VTA will administer this project through PA/ED, PS&E, Right-of-Way and Construction, and Caltrans will provide resources for oversight. No federal funding sources have been identified for this project.

3. ANTICIPATED ENVIRONMENTAL APPROVAL

CEQA		**NEPA**	
Environmental Determination			
Statutory Exemption	☐		
Categorical Exemption	☒	Categorical Exclusion	☐
Environmental Document			
Initial Study or Focused Initial Study with proposed Negative Declaration (ND) or Mitigated ND	☐	Routine Environmental Assessment with proposed Finding of No Significant Impact Complex Environmental Assessment with proposed Finding of No	☐ ☐

		Significant Impact	
Environmental Impact Report	☐	Environmental Impact Statement	☐
CEQA Lead Agency (if determined):		VTA	
Estimated length of time (months) to obtain environmental approval:		Approximately 6-8 months	
Estimated person hours to complete identified tasks:		A total of approximately 3,673 person hours have been estimated to complete the identified tasks.	

4. SPECIAL ENVIRONMENTAL CONSIDERATIONS

The proposed project is located in a highly urbanized area and is not expected to require unusual, exceptional or extended environmental processes. Due to the archaeological sensitivity of the project area, Extended Phase I (XPI) testing is required to determine if archaeological deposits related to the first Mission Santa Clara de Asis and associated cultural deposits exist within the U.S. 101/De La Cruz Boulevard/Trimble Road interchange. Phase II excavations and evaluation may be needed if resources are identified during the XPI testing. Review and concurrence by the State Historic Preservation Office (SHPO) may also be required.

The proposed project could affect burrowing owls (*Athene cunicularia*), a special status species, and other ground-nesting birds that may nest in the project area (e.g., killdeer). Ornamental trees that occur in the project area could also support bird nests. Vegetation removal will need to occur during the non-nesting season and/or pre-construction surveys will need to be conducted during the nesting season and steps implemented to avoid impacts to nesting birds. Timing of surveys/vegetation removal to avoid nesting bird impacts will need to be considered as part of the project schedule.

5. ANTICIPATED ENVIRONMENTAL COMMITMENTS

The proposed project will be funded by local and State funding sources. Compliance with the California Environmental Quality Act (CEQA) is required. The VTA is the Lead Agency for CEQA with Caltrans and the City acting as CEQA Responsible Agencies. It is anticipated at this time the project would require a Categorical Exemption (CE) to comply with CEQA. Because there will be no federal nexus for the project (e.g., federal funding), National Environmental Policy Act compliance is not required for the proposed project. The anticipated environmental commitments for each resource area are described below:

a. **Land Use:** The proposed project is not anticipated to result in land use impacts. No additional studies will be required.

b. **Growth:** The proposed project is not anticipated to be growth inducing. Capacity enhancing improvements are needed to resolve operational deficiencies through design year 2035. No additional studies will be required.

c. **Farmlands/Timberlands:** No farmlands or timberlands are located in the project area. No additional studies will be required.

d. **Community Impacts:** The proposed project is not anticipated to result in land use impacts or affect any neighborhood or community interest group. Additionally, there will be no property access impacts during or after construction, property relocations, or permanent access or circulation impacts (a Traffic Management Plan will be prepared to address the construction period). The project would not have a disproportionately high or adverse effect on any minority or socioeconomic population. Therefore, a Community Impact Assessment will not be required.

e. **Visual and Aesthetics:** No visual impacts are anticipated with implementation of the proposed project. Proposed improvements reflect modifications to existing improvements and will not significantly change the visual environment. A visual memorandum will be prepared to document the evaluation of visual impacts resulting from the proposed project.

   Estimated time to complete: 2 months
   Estimated Cost: $2,500

f. **Cultural Resources:** Preparation of an Archaeological Survey Report (ASR) and a Historic Resources Compliance Report (HRCR) will be required. Caltrans cultural resources staff have already indicated that Extended Phase I (XPI) testing and reporting will be required due to the sensitivity of the project area. Phase II evaluation may be needed depending on the findings of the XPI study.

   Estimated time to complete: 6 months (assumes no Phase II)
   Estimated Cost: $125,000 (assumes no Phase II)

g. **Hydrology and Floodplain:** A technical hydrology/storm drain analysis and a floodplain evaluation will be required to determine the effect of the improvements on the existing storm drainage.

   Estimated time to complete: 2 months
   Estimated Cost: $5,000

h. **Water Quality and Stormwater Runoff:** A water quality assessment will be required.

   Estimated time to complete: 2 months
   Estimated Cost: $5,000

i. **Geology, Soils, Seismic and Topography:** A site-specific, detailed foundation investigation and report will be required.

   Estimated time to complete: 4 months
   Estimated Cost: $50,000

j. **Paleontology:** A Paleontological Identification Report (PIR) will be required. If paleontological resources are identified during preparation of the PIR, a Paleontological Evaluation Report (PER) will also be needed.

   Estimated time to complete: 3 months (assumes no PER)
   Estimated Cost: $3,000 (assumes no PER)

k. **Hazardous Waste/Materials:** An Initial Site Assessment and surveys for aerially-deposited lead (ADL), herbicides and pesticides, asbestos-containing materials (ACM), and lead-based paint will be required.
   Estimated time to complete: 2 months
   Estimated Cost: $ 30,000

l. **Air Quality:** An air quality analysis will be required.
   Estimated time to complete: 3 months
   Estimated Cost: $ 12,000

m. **Noise and Vibration:** A noise study report will be required due to the presence of sensitive receptors in the project vicinity.
   Estimated time to complete: 5 months
   Estimated Cost: $ 19,500

n. **Energy and Climate Change:** Greenhouse gas emissions will be analyzed in the Air Quality Analysis. A technical energy report will not be required. No additional permits or agency coordination are required.

o. **Biological Environment:** A Natural Environmental Study (Minimal Impact) will be required to evaluate the effect of the proposed project on special-status species and vegetation removal. No additional permits or agency coordination are required.
   Estimated time to complete: 3 months
   Estimated Cost: $12,000

p. **Cumulative Impacts:** Any project related cumulative impacts resulting from the proposed project, combined with other projects in the vicinity, will be evaluated based on project design. No additional permits or agency coordination are required.

q. **Context Sensitive Solutions:** Efforts to comply with context sensitive solutions will be undertaken in conjunction with the Project Approval & Environmental Document (PA&ED) process. No additional permits or agency coordination are required.

6. PERMITS AND APPROVALS

A jurisdictional wetland delineation was prepared for the project site and was field verified by the U.S. Army Corps of Engineers (USACE) on February 10, 2009. The proposed project will not result in a discharge of fill into waters of the U.S. or State since the USACE did not assert jurisdiction over the ditches and culverts mapped within the project area. No authorizations from the USACE or the Regional Water Quality Control Board (RWQCB) are required for this project.

7. LEVEL OF EFFORT: RISKS AND ASSUMPTIONS

Assumptions:

- Scope as defined in current build alternative.
- No federally listed species or jurisdictional wetlands are expected to be present. No compensatory mitigation for biological resources would be required.
- An HRCR, ASR, and XPI will be completed. If no cultural resources are identified as part of the XPI evaluation, the Section 106 process will require approximately six months to complete.
- Phase II cultural resources evaluation testing is not required.
- Surveys for ADL, soils testing and surveys for ACM and lead-based paint are required. Hazardous waste impacts can be mitigated through compliance with local, State, and federal regulations. No other hazardous waste issues will be identified.
- No unusual or controversial visual impacts.
- No permanent air quality impacts.
- No noise abatement will be required.

Risks:

- Moderate Probability/High Impact: Design plans change to include activities not currently identified in the request would increase project costs and schedule delay for cultural resources (1 additional year).
- Low Probability/High Impact: If resources are identified as a result of XPI testing, Phase II evaluation will be required, resulting in increased project costs and additional schedule delay (up to 4 months).
- Low Probability/High Impact: If cultural resources are determined eligible, a Finding of Effect (FOE) will be required. If impacts are adverse a Memorandum of Agreement (MOA) and Historic Property Treatment Plan (HPTP) will address mitigation requirements. As a result of multi-agency participation, this portion of the process can take an additional six months or longer. If FHWA/SHPO disagrees with cultural resources effects finding and require extended MOA consultation, then increased project costs and additional schedule delay (up to 6 months) would occur.
- Low Probability/High Impact: Significant Native American controversy would increase costs and delay schedule 6 months or longer.
- Low Probability/High Impact: If unforeseen issues of hazardous waste, air quality, noise or traffic impacts are encountered, then increased project costs, schedule delay (6 months or longer) would occur.
- Low Probability/Moderate Risk: Significant public controversy necessitating a public meeting would add 2-4 months to schedule.
- Low Probability/Low Risk: Potential cumulative impacts from multiple projects increase the significance of environmental impact.

8. PEAR TECHNICAL SUMMARIES

8.1 Land Use:

Existing and Future Land Uses. Land uses in the immediate vicinity of the proposed project are highly urbanized. The Mineta San Jose International Airport is located immediately to the south. Surrounding lands are designated for industrial uses.

Consistency with State, Regional and Local Plans. The proposed project would implement project No. 21722 – Improve U.S. 101 southbound Trimble Road/De La Cruz Boulevard/Central Expressway interchange, as listed in the *Transportation 2035 Plan for the San Francisco Bay Area* dated April 2009. The proposed project is also identified in the Santa Clara Valley Transportation Authority's *Valley Transportation Plan 2035* as project H24 – U.S. 101/Trimble Road/De La Cruz Boulevard/Central Expressway Interchange Improvements. The proposed project is consistent with the stated objectives of local jurisdictions, including the City of San Jose, City of Santa Clara and Santa Clara County. No avoidance, minimization, or mitigation measures would be required.

Parks and Recreation. The proposed project is located within the cities of Santa Clara and San Jose. Two parks are located in the vicinity of the project area: Montague Park and Memorial Cross Park. City of San Jose-designated parkland associated with the Guadalupe River and the Guadalupe River Trail are also located in the vicinity of the proposed project. None of these parks are within or adjacent to the project area. The project would be constructed predominately within the existing U.S. 101 right-of-way and would not physically impact any of the existing parks within the project vicinity. No avoidance, minimization, or mitigation measures would be required.

8.2 Growth:

This project is not anticipated to encourage unplanned growth. The purpose of the project is to relieve traffic congestion by improving traffic operation and enhancing bicycle/pedestrian safety. It would have little influence on growth because future growth in the region is highly constrained. The project would not result in the conversion of adjacent land uses or provide access to areas previously inaccessible or improve access in ways that would foster local development beyond that which is already planned.

8.3 Farmlands/Timberlands:

No farmlands/timberlands are located adjacent to U.S. 101 within the project vicinity, thus no farmland/timberland would be converted with project implementation. The majority of land to be used is located within the Caltrans right-of-way, and no land within the right-of-way is used as farmland or timberland.

8.4 Community Impacts:

Implementation of the project would require the acquisition of approximately 2.7 acres of right-of-way. The right-of-way acquisition areas are portions of three parcels owned by the City of San

Jose and utilized by the Mineta San Jose International Airport and 1 private parcel. The acquisition areas are clear and no structures or other improvements would be affected. No relocations would be necessary. Building or residential displacements are not anticipated nor is the project expected to affect any disadvantaged minority or senior groups. Additionally, the project would not divide the community as the mainline is already in existence. No additional permits or agency coordination required.

Any impacts to above or below ground utilities will be evaluated based on project design. It is anticipated that utilities would need to be relocated due to reconstruction of the interchange and widening of the overcrossing and roadway. Relocation would be expected within the right-of-way identified for project improvements.

8.5 Visual/Aesthetics:

No visual impacts are anticipated because the interchange already exists as a raised, three-quadrant cloverleaf interchange and is presently in use. The roadway corridor is very urbanized and developed, characterized primarily by industrial, commercial, and airport uses adjacent to the roadway. Vegetation in the project area is ruderal, consisting of weedy, introduced species and ornamental trees. No scenic resources (ancestral or heritage trees, rock outcroppings, or historic buildings) are located within the project area. A memorandum will be prepared to document the assessment of visual impacts resulting from the proposed project.

8.6 Cultural Resources:

A Draft Archaeological Survey Report (ASR) will be prepared to document cultural resources identification efforts in the archaeological Area of Potential Effects (APE). Archival and background research, field survey of the APE, consultation with local agencies and potentially interested parties, and an archaeological sensitivity analysis have been initiated. The field survey of the area did not identify any cultural resources; however, the study did identify sensitivity for prehistoric and historic archaeological cultural resources within the horizontal and vertical extent of the APE.

One prehistoric site, CA-SCL-762, has been previously recorded within the horizontal APE. This site was recorded on both sides of the levee and underneath fill, approximately 10 feet below Trimble Road. Current project plans in this portion of the project site extend to a depth of nine feet and this site may not be affected by the proposed project. In addition, historical records indicate the location of the first Mission Santa Clara in or near the APE.

Current project plans include excavation within the U.S. 101/De La Cruz Boulevard/Trimble Road interchange to depths ranging from three feet to nine feet below surface. The interchange has been previously disturbed by the construction and subsequent modifications of U.S. 101 and De La Cruz Boulevard/Trimble Road. Despite the level of previous disturbance there is a possibility of intact subsurface prehistoric or historic deposits within the interchange that could be impacted by ground disturbing construction activities. In addition, pile driving to a maximum depth of 73 feet below surface will be done to support the new overcrossing bridge abutments and median column. No archaeological subsurface investigations have been undertaken in this area to date.

The possibility of buried prehistoric and historical archaeological sites in or near the APE is high. The Guadalupe River was a focus of prehistoric occupation in the Santa Clara Valley with Native American use of the APE continuing well into both the Hispanic and early American periods. The APE continued to be a focus for human settlement during the historic period with the establishment of the Mission Santa Clara within or near the APE and the Pueblo of San Jose to the southeast of the APE.

An ASR and Historic Resources Compliance Report (HRCR) will need to be prepared. The estimated combined cost is approximately $30,000. Extended Phase I (XPI) testing would also be required to determine if archaeological deposits related to the first Mission Santa Clara de Asis and associated cultural deposits exist within the U.S. 101/De La Cruz Boulevard/Trimble Road interchange. The XPI testing and report may take up to six months to complete. Any subsequent changes in project scope may require additional archaeological review. Approximately $45,000 has been estimated to conduct the XPI testing and report. It is assumed that one prehistoric site will be found during trenching and that the known site will be determined as cultural. Further, it is assumed that one historic component will be identified, but not the mission. Phase II text excavations may be needed if any identified sites cannot be avoided. Eligibility will be determined subsequent to XPI activities (if no further resources are encountered) or subsequent to Phase II (if resources are encountered during XPI activities). Although not anticipated, coordination with SHPO may be required if eligible resources are impacted. A total of $50,000 has been estimated to mitigate the potential project impacts on buried resources.

8.7 Hydrology and Floodplain:

U.S. 101 crosses the Guadalupe River between Guadalupe Parkway and De La Cruz Boulevard. The Ordinary High Water Mark (OHWM) of the river is approximately 30 feet wide at the U.S. 101 bridge. The Guadalupe River begins in the Santa Cruz Mountains, flows through San Jose, and connects to San Francisco Bay via Alviso Slough. The Guadalupe River is not located within the project area and will not be impacted by the proposed project. Design pollution prevention BMPs included as part of the proposed project would consist of seven retention basins. A system of drainage ditches, inlets, and pipe culverts would convey runoff from paved areas to the proposed retention basins for water quality treatment. The retention basins, located in each of the four interchange quadrants, similar to the existing condition, would be sized to contain the runoff generated by the design storm event.

Numerous ditches currently occur within the project area, primarily at the U.S. 101/De La Cruz Boulevard interchange. None of the culverts associated with these ditches are likely to transmit water for any duration and some of the culverts are partially buried. None of the ditches have a surface connection to the Guadalupe River. As described in Section 8.15, Biological Environment, the USACE determined that the ditches are not jurisdictional and therefore, are not subject to regulation under the Clean Water Act. The project's effect from implementing the project on local drainage should be discussed. A technical hydrology/storm drain analysis will be conducted by the project engineer as needed to estimate additional runoff, and design a strategy /design concept for accommodating additional stormwater. This analysis will take an estimated 2 months to complete.

The project area lies within designated 100-year floodplains (Zone AH and Zone X). Additional hydrological evaluations will be required to determine the potential encroachment of project improvements within the 100-year flood zone. A technical Floodplain Evaluation will be required to assess potential changes to the floodplain limits and/or changes to upstream flood elevations.

8.8 Water Quality and Storm Water Runoff:

The design and construction of the proposed project must adhere to the requirements set forth in the Construction General Permit (CGP), which was adopted by the State Water Resources Control Board (SWRCB) on September 2, 2009, the Caltrans Statewide National Pollution Discharge Elimination System (NPDES) permit, the Caltrans Storm Water Management Plan, the Caltrans Project Planning and Design Guide, the Construction Site Best Management Practices (BMPs) Manual, and the Caltrans Standard Specifications. As described above in Section 8.7, retention basins are proposed for water quality treatment and containment of storm water runoff.

Potential water quality impacts during construction should be addressed on the design and construction phases. Potential impacts include erosion and sedimentation, and accidental spills of hazardous materials and other pollutants. Design plans need to insure no direct discharge of pollutants occurs into any water body. The construction contractor has the responsibility to implement all measures necessary to eliminate potential impacts (as stated in Caltrans' Standard Specifications Section 7-1.01G).

The Office of Water Quality shall be consulted throughout the planning and design phases, rather than only immediately prior to construction, to identify temporary and permanent BMPs necessary to minimize or prevent impacts to the existing water quality due to the proposed project. A Storm Water Pollution Prevention Plan would be prepared and implemented during construction to the satisfaction of the resident engineer.

Because the proposed project would disturb more than one acre of soil, the following would be required:

1. A Notification of Construction (NOC) would be submitted to the San Francisco RWQCB at least 30 days prior to start of construction. The tentative start date, duration, location of construction, description of project, estimated number of affected acres, and name and phone number of engineer in charge of project would be listed. The NOC should also be submitted with an erosivity assessment and Stormwater Pollution Prevention Plan (SWPPP).
2. A Notice of Completion of Construction (NCC) would be submitted to the San Francisco RWQCB upon completion of the construction and stabilization of the site. A project would be considered complete when the criteria for final stabilization in the Construction General Permit are met and documented.
3. All areas of ground disturbance would be revegetated with plant material suited for the specific climatic and soil conditions of the project area. They will then be mulched to stabilize the soils for erosion control and minimize discharges of sediment into stormwater run-off.

4. Graded areas should have a gradient of no greater than 4:1. Areas with final slopes greater than 4:1 must be approved by the District landscape architect.

A Water Quality Assessment Report will be prepared to characterize the project's contribution to water quality concerns. This will take an estimated 2 months to complete. No additional permits, including Section 404 (USACE), Section 401 (RWQCB), and Section 1602 (CDFG) are required.

8.9 Geology, Soils, Seismic and Topography:

The project site is mainly underlain by Basin Deposits (Qhb, Holocene). The geologic unit for basin deposits represents very dark colored clay and very fine silty clay, rich in organic material deposited beyond the levees and flood plains in the flood basins where stilling flood water drop their finest sediment. Subsurface soil conditions generally consist of predominantly stiff to very stiff clayey silt to silty clay, interbedded with a 5-10-foot think layer of medium dense sand and gravel. These units are underlain by dense to very dense sand and gravel to 65 feet, the maximum depth explored. The project area is at an elevation of 30 to 35 feet above sea level on level terrain.

The governing fault for the proposed project is the Hayward Fault located approximately 9.0 km from the site. The anticipated Peak Bedrock Acceleration for this fault is 0.5g. The project site is generally underlain by very stiff to hard clay/silt with pocket/lens/layer of medium dense sands. Accordingly, the liquefaction potential at the project site is considered as generally moderate.

A Preliminary Geotechnical Information memorandum will be prepared for foundation type selection for the proposed project. In addition, a site-specific, detailed foundation investigation and report should be prepared during the PS&E phase of the project to further evaluate the geotechnical conditions of the project site. This will take approximately four months to complete.

8.10 Paleontology:

The project area is located on sediments that have not been fully mapped. The *Geologic Map of the San Francisco-San Jose quadrangle, California* (Wagner, et al., 1991) indicates that the project area is underlain by Holocene Alluvium but was largely developed before geological mapping was conducted. Mapping indicates that exposures of Pleistocene (Quaternary) alluvium are nearby and may underlie the project at shallow depth. Fossils have been found from these types of sediments in San Jose, and included remains of a Pleistocene Camel. Although no specific paleontological localities have been identified on the project site, a Paleontological Identification Report (PIR) would be prepared and certified by a qualified paleontologist to document the identification efforts for paleontological resources. If paleontological resources are identified during preparation of the PIR, a Paleontological Evaluation Report (PER) would also be prepared to discuss the sensitivity of the fossils, and discuss monitoring and other mitigation to minimize project impacts. Often the PIR and PER can be combined into a single document. This will take approximately three months to complete (assumes combined PIR/PER). No additional permits or agency coordination are required.

8.11 Hazardous Waste/Materials:

An Initial Site Assessment (ISA) will be prepared for the proposed interchange improvements. A review of historical aerial photographs, a field inspection of the project U.S., and a review of listing of Federal and State regulatory agencies that are responsible for recording incidents of spills, and soil and ground water contamination and transfer, storage or disposal facilities that handle hazardous materials have been initiated. It has been determined that it is highly likely that the surface soils in the project area are affected by deposition of aerially deposited lead (ADL). Studies for ADL will be conducted prior to construction activities. A cost estimate of $10,000 has been included to address this issue. Additional costs associated with "off-hauling" contaminated soils are not expected.

Review of historical information indicates that the study area is built on farmland. It is likely that site soils are impacted with pesticides and herbicides, including arsenic mercury and DDT, as a result of historic farming operations. Soil samples should be collected to the depth of the proposed excavation areas (if any) and analyzed for these constituents.

Structures within the project area may contain Asbestos-Containing Materials (ACM) and lead-based paint. An ACM investigation should be preformed by an inspector certified by Asbestos Hazardous Emergency Response Act (AHERA) under Toxic Substance Control Act (TSCA) Title II and certified by Cal OSHA under State of California rules and regulations (California Code of Regulations, Section 1529). Surveys for lead-based paint should be conducted prior to demolition of the structure within the right-of-way. Lead-based paint and ACM should be abated by using a contractor certified to perform such work. Costs to conduct surveys for asbestos and lead paint are estimated at $15,000. These surveys will take approximately 2 months to complete. No additional permits or agency coordination is required.

8.12 Air Quality:

The project site is located in the San Francisco Bay Area Air Basin, under the jurisdiction of the Bay Area Air Quality Management District (BAAQMD). The Basin is currently in non-attainment for federal ozone and particulate matter of 2.5 microns or less ($PM_{2.5}$) and non-attainment for State ozone, PM_{10} and $PM_{2.5}$ standards. Potential air quality issues are expected from the interchange improvements and construction activities. An Air Quality Analysis will be required. Best Management Practices required by the BAAQMD would be implemented and include:

- All exposed surfaces (e.g., parking areas, staging areas, soil piles, graded areas, and unpaved access roads) shall be watered two times per day.
- All haul trucks transporting soil, sand, or other loose material off-site shall be covered.
- All visible mud or dirt track-out onto adjacent public roads shall be removed using wet power vacuum street sweepers at least once per day. The use of dry power sweeping is prohibited.
- All vehicle speeds on unpaved roads shall be limited to 15 mph.

- All roadways, driveways, and sidewalks to be paved shall be completed as soon as possible. Building pads shall be laid as soon as possible after grading unless seeding or soil binders are used.
- Idling times shall be minimized either by shutting equipment off when not in use or reducing the maximum idling time to 5 minutes (as required by the California airborne toxics control measure Title 13, Section 2485 of California Code of Regulations [CCR]). Clear signage shall be provided for construction workers at all access points.
- All construction equipment shall be maintained and properly tuned in accordance with manufacturer's specifications. All equipment shall be checked by a certified mechanic and determined to be running in proper condition prior to operation.
- Post a publicly visible sign with the telephone number and person to contact at the Lead Agency regarding dust complaints. This person shall respond and take corrective action within 48 hours.

Preparation of the Air Quality Analysis would take approximately 3 months to complete. Standard dust control measures and compliance with BAAQMD rules and regulations will be required during construction. No additional permits are required.

8.13 Noise and Vibration:

Noise Study Report (NSR). The project includes the construction of additional through lanes and a change in the horizontal alignment of the U.S. 101 overcrossing. A sensitive receptor (La Quinta Inn) is located within 500 feet of the project area in the northeast quadrant of the interchange. A Noise Study Report (NSR) will be prepared consistent with the Caltrans Noise Analysis Protocol (May 2011) and Technical Noise Supplement (TeNS) to address traffic noise impacts on noise-sensitive uses, such as existing and approved future commercial or residential areas located adjacent to the proposed project. Noise standards regulating noise impacts, including the Noise Abatement Criteria (NAC) and applicable local noise ordinances, will be discussed for land uses located adjacent to the project. The areas with potential future traffic noise impacts will be identified using land use information, aerial photographs, and field reconnaissance. A discussion of any existing sensitive uses and approved future land development in the project vicinity will be included.

Ambient noise level measurements will be conducted to establish the existing noise environment at representative land uses along U.S. 101 and De La Cruz Boulevard within the project area. Short-term (15-minute) noise level measurements will be obtained with concurrent traffic counts and vehicles speed to document the existing noise environment and to calibrate the traffic noise model. Long-term 24-hour noise level measurements will be conducted to identify the peak traffic noise hour and the background noise level. In addition, interior noise levels will be evaluated for the hotel and other noise-sensitive receptors with no outdoor frequent human use areas exposed to traffic noise from U.S. 101 and De La Cruz Boulevard that have interior noise concerns. Observations of other noise sources, barriers, terrains, building heights, and other site specific information will be noted during each measurement period.

Short-term noise impacts from construction sources will be analyzed based on the equipment expected to be used, length of a specific construction task, equipment power type (gasoline or diesel engine), horsepower, load factor, and percentage of time in use. The construction noise impact will be evaluated in terms of maximum sound level (L_{max}) and the frequency of occurrence at adjacent noise-sensitive locations. Analysis requirements will be based on the sensitivity of the area and the City's Noise Ordinance specifications.

The Federal Highway Administration (FHWA) Traffic Noise Model (TNM) version 2.5 will be used to evaluate the traffic noise levels associated with the Existing, Future No Build, and one Future Build. Model input data include peak hour traffic volumes, vehicle mix among autos, medium and heavy trucks, vehicle speeds, ground attenuation factors, and roadway configurations. Existing roadway traffic noise will be calculated as baseline conditions, using concurrent traffic counts and speed obtained during ambient noise level measurement. The future traffic conditions will assume either the worst-case traffic condition or the projected traffic volumes provided in the traffic study.

Preparation of the NSR would take approximately 3 months to complete.

8.14 Energy and Climate Change:

Greenhouse Gas Emissions will be analyzed in the Air Quality Analysis based on project vehicle miles traveled. A brief analysis of the emissions will be provided. The proposed project is not considered to be a "major project" for the consumption of energy during project construction or operation. A technical energy analysis will not be required. The effects of the proposed project on energy consumption will be addressed in the Air Quality Analysis. No additional permits or agency coordination are required.

8.15 Biological Environment:

A Draft Natural Environmental Study-Minimal Impacts (NES-MI) will be prepared to assess the potential biological resource impacts associated with the proposed project. Background research has been completed, including a complete biological records search, and several field surveys to assess current habitat conditions, a jurisdictional wetland delineation, and evaluation of the site's potential to support special-status plant and/or animal species.

The proposed project is located in an area dominated by ruderal vegetation and urban/developed land. Most of the lands in the immediate vicinity of the project are developed except for a few vacant lots/fields with ruderal vegetation. The Guadalupe River crosses Trimble Road in the vicinity of the project area near the northern limits of the proposed project. No natural plant communities are located in the project area.

A wetland delineation conducted on April 23, 2008 identified no potential jurisdictional waters in the project area. Numerous ditches within the project area are located primarily at the interchange. However, the culverts associated with these ditches are unlikely to transmit water for any duration, and some of the culverts are partially buried. The ditches have a sandy/gravel (fill) substrate and are dominated by upland vegetation including oats, ripgut brome, and hare

barley. During a site visit on February 10, 2009, the USACE determined that the ditches are not jurisdictional and therefore, are not subject to regulation under the Clean Water Act.

The proposed project could affect burrowing owls (*Athene cunicularia*), a special status species, and other ground-nesting birds that may nest in the project area (e.g., killdeer). Ornamental trees that occur in the project area could also support bird nests. Avoidance and mitigation measures will include removing vegetation during the non-nesting season or conducting pre-construction survey for nesting birds during the nesting season, plus hydroseeding of all constructed slopes and other graded areas resulting from project construction. The project will not affect any other special status wildlife species or special status plant species. The NES-MI will take approximately 3 months to complete.

8.16 Cumulative Impacts:

The proposed project reflects various modifications to an existing mainline freeway system, essentially improving the interchange and adding lanes to the overcrossing/local streets to improve traffic operations through design year 2035, thus increasing capacity. As a result, the long-term project improvements are expected to create potential increases in cumulative effects. The project does not generate new traffic but improves travel operations with the new lane additions. Overall, long-term cumulative effects are expected to be positive as an improvement in vehicular operations should have a commensurate improvement to local air quality conditions. Other potential cumulative impacts are anticipated in the short-term in conjunction with other concurrent roadway, public works and land development projects occurring simultaneously in the region. Any project related cumulative impacts resulting from the proposed project, combined with other projects in the vicinity, will be evaluated based on project design.

8.17 Context Sensitive Solutions:

Context sensitive solutions meet transportation goals in harmony with community goals and natural environments. They require careful, imaginative, and early planning, and continuous community involvement. Efforts to comply with context sensitive solutions will be undertaken in conjunction with the PA&ED process.

9. SUMMARY STATEMENT FOR PSR OR PSR-PDS

Based on past experience with similar actions and information provided by reviewers to date, the Preliminary Environmental Analysis Report (PEAR) anticipates the environmental document needed for this project is a Categorical Exemption under CEQA (14 California Code of Regulations, Section 15301). The project is located in an urban area, which has been largely developed with industrial, commercial, and airport uses. The major environmental issues to be addressed include water quality and erosion, floodplain, air quality and noise, cultural resources, biological resources (e.g., burrowing owls) and hazardous waste/materials. Any changes in scope will require further project review and reassessment of the level of environmental documentation.

10. DISCLAIMER

This Preliminary Environmental Analysis Report (PEAR) provides information to support programming of the proposed project. It is not an environmental determination or document. Preliminary analysis, determinations, and estimates of mitigation costs are based on the project description provided in the Project Study Report (PSR). The estimates and conclusions in the PEAR are approximate and are based on cursory analyses of probable effects. A reevaluation of the PEAR will be needed for changes in project scope or alternatives, or in environmental laws, regulations, or guidelines.

11. List of Preparers

Cultural Resources specialist Neal Kaptain, Associate – LSA Associates, Inc.	Date:
Biologist Matt Ricketts, Senior Biologist – LSA Associates, Inc.	Date:
Community Impacts specialist Shanna Guiler, AICP, Senior Planner – LSA Associates, Inc.	Date:
Noise and Vibration specialist Jason Lui, Senior Noise Specialist -LSA Associates, Inc.	Date:
Air Quality specialist Keith Lay, Associate – LSA Associates, Inc.	Date:
Paleontology specialist Steve Conkling, Principal – LSA Associates, Inc.	Date:
Water Quality specialist Richard Nichols, CPESC,QSD/QSP,CRM – LSA Associates, Inc.	Date:
Other: Geology and Soils, Gary Parikh – Parikh and Associates, Inc.	Date:
PEAR Preparer (Name and Title): Kristin Nurmela, Senior Planner – LSA Associates, Inc.	Date:

12. REVIEW AND APPROVAL

I confirm that environmental cost, scope, and schedule have been satisfactorily completed and that the PEAR meets all VTA requirements. Also, if the project is scoped as a routine EA, complex EA, or EIS, I verify that the HQ DEA Coordinator has concurred in the Class of Action.

Date: Oct 1, 2012

VTA Environmental Programs and Resources Manager, Tom Fitzwater

Date: 10/1/2012

VTA Project Manager, David Kobayashi

ATTACHMENTS:

Attachment A: PEAR Environmental Studies Checklist

LSA

FIGURE 1

U.S. 101/ De La Cruz Boulevard/Trimble Road Interchange Improvements
EA-04-234-26470K

N

0 10
MILES

SOURCE: ©2006 DeLORME. STREET ATLAS USA®2006.

Regional Location

P:\RAJ0603\g\Figure1_ProjectLocation.cdr (11/26/2008)

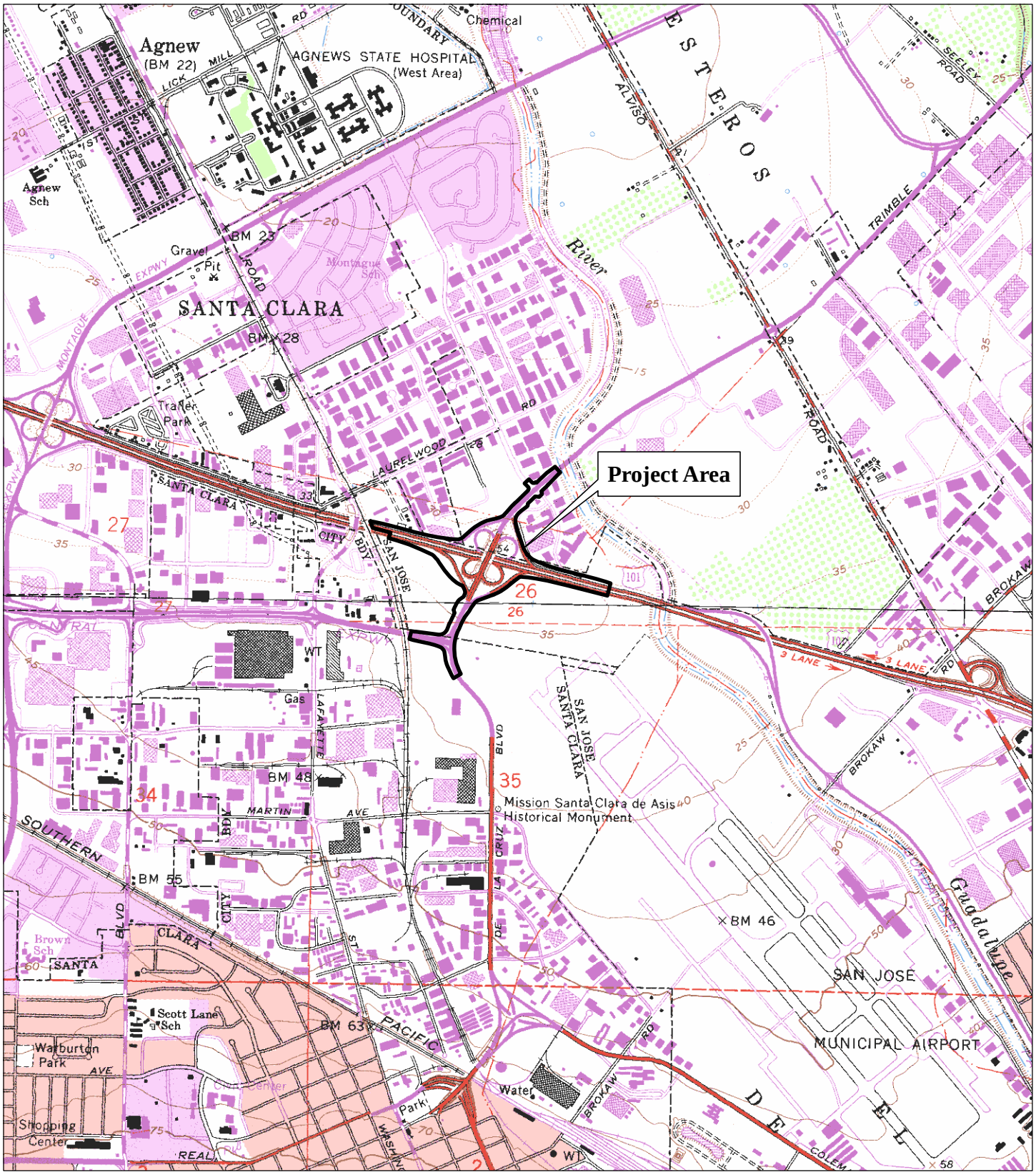

LSA

FIGURE 2

U.S. 101 / De La Cruz Boulevard / Trimble Road
Interchange Improvements
EA 04-234-26470K

N

0 500 1,000 2,000
FEET

Project Vicinity

SOURCE: USGS 7.5' topographic quadrangles: *Milpitas, Calif.* (1980); *San Jose West, Calif.*(1980)

I:\RAJ0603\GIS\Maps\Biology\PEAR\Figure2_Project Vicinity.mxd (12/13/2011)

LSA

FIGURE 3

Project Area

Proposed Project

U.S. 101 / De La Cruz Boulevard / Trimble Road
Interchange Improvements
EA 04-234-26470K

0 250 500
FEET

Proposed Project

SOURCE: Aerial Imagery from DigitalGlobe (5/23/2010).

I:\RAJ0603\GIS\Maps\Biology\PEAR\Figure3_Proposed Project.mxd (12/13/2011)

Attachment A: PEAR Environmental Studies Checklist

Rev. 11/08

Environmental Studies for PA&ED Checklist					
	Not anticipated	Memo to file	Report required	Risk* L M H	Comments
Land Use	☒	☐	☐	L	
Growth	☒	☐	☐	L	
Farmlands/Timberlands	☒	☐	☐	L	
Community Impacts	☒	☐	☐	L	
Community Character and Cohesion	☒	☐	☐	L	
Relocations	☒	☐	☐	L	
Environmental Justice	☒	☐	☐	L	
Utilities/Emergency Services	☒	☐	☐	L	
Visual/Aesthetics	☐	☒	☐	L	
Cultural Resources:	☐	☐	☐	L	
Archaeological Survey Report	☐	☐	☒	M	
Historic Resources Evaluation Report	☒	☐	☐	L	
Historic Property Survey Report	☒	☐	☐	L	
Historic Resource Compliance Report	☐	☐	☒	M	
Section 106 / PRC 5024 & 5024.5	☐	☐	☒	M	
Native American Coordination	☐	☐	☒	M	
Finding of Effect	☒	☐	☐	L	
Data Recovery Plan	☒	☐	☐	L	
Memorandum of Agreement	☒	☐	☐	L	
Other: XPI	☐	☐	☒	L	
Hydrology and Floodplain	☐	☒	☐	L	
Water Quality and Stormwater Runoff	☐	☒	☐	L	
Geology, Soils, Seismic and Topography	☐	☐	☒	L	
Paleontology	☐	☐	☒	L	
PER	☐	☐	☒	L	
PMP	☒	☐	☐	L	
Hazardous Waste/Materials:	☐	☐	☒	L	
ISA (Additional)	☐	☐	☒	M	
PSI	☒	☐	☐	L	
Other:	☐	☐	☐	L	
Air Quality	☐	☐	☒	L	
Noise and Vibration	☐	☐	☒	L	
Energy and Climate Change	☒	☐	☐	L	
Biological Environment	☐	☐	☐	L	
Natural Environment Study	☐	☐	☒	L	
Section 7:	☒	☐	☐	L	
Formal	☐	☐	☐	L	
Informal	☐	☐	☐	L	
No effect	☐	☐	☐	L	
Section 10	☒	☐	☐	L	
USFWS Consultation	☒	☐	☐	L	
NMFS Consultation	☒	☐	☐	L	
Species of Concern (CNPS, USFS, BLM, S, F)	☒	☐	☐	L	

Environmental Studies for PA&ED Checklist					
	Not anticipated	Memo to file	Report required	Risk* L M H	Comments
Wetlands & Other Waters/Delineation	☒	☐	☐	L	
404(b)(1) Alternatives Analysis	☒	☐	☐	L	
Invasive Species	☒	☐	☐	L	
Wild & Scenic River Consistency	☒	☐	☐	L	
Coastal Management Plan	☒	☐	☐	L	
HMMP	☒	☐	☐	L	
DFG Consistency Determination	☒	☐	☐	L	
2081	☒	☐	☐	L	
Other:	☐	☐	☐	L	
Cumulative Impacts	☒	☐	☐	L	
Context Sensitive Solutions	☒	☐	☐	L	
Section 4(f) Evaluation	☒	☐	☐	L	
Permits:					
401 Certification Coordination	☒	☐	☐	L	
404 Permit Coordination, IP, NWP, or LOP	☒	☐	☐	L	
1602 Agreement Coordination	☒	☐	☐	L	
Local Coastal Development Permit Coordination	☒	☐	☐	L	
State Coastal Development Permit Coordination	☒	☐	☐	L	
NPDES Coordination	☐	☐	☒	L	
US Coast Guard (Section 10)	☒	☐	☐	L	
TRPA	☒	☐	☐	L	
BCDC	☒	☐	☐	L	

ATTACHMENT D:

Transportation Planning Scoping Information Sheet

ARTICLE 4 Transportation Planning Scoping Information Sheet

PROJECT INFORMATION

District	County	Route	Post Miles	Project ID No/ Expenditure Authorization No.
04	SCL	101	PM 40.0/41.5	EA 04-234-26470k
Project Name and Description :Route 101/De La Cruz Interchange				

Prepared by:

District Information Sheet Point of Contact*:	Name: Dina El Tawansy	Functional Unit:	D4 Design Santa Clara

* The District Information Sheet Point of Contact is responsible for completing Project Information, PDT Team and Stakeholder Information, and coordinating the completion of project-related information with the Transportation Planning Stakeholders. Upon completion, provides the Transportation Planning PDT Representative and Project Manager with a copy of the Information Sheet.

Project Development Team (PDT) Information		
Title	**Name**	**Phone Number**
Project Manager	Keith Meyer	(408)280-2772
Project Engineer	William Devabalan	(408) 280-2772
Transportation Planning PDT Representative**	David Kobayashi - VTA	(408) 321-5892

Transportation Planning Stakeholder Information		
Title	**Name**	**Phone Number**
Regional Planner	tbd	
System Planner	tbd	
Local Development-Intergovernmental Review (LD-IGR) Planner	tbd	
Community Planner	tbd	
Goods Movement Planner	tbd	
Transit Planner	tbd	
Bicycle and Pedestrian Coordinator	tbd	
Park and Ride Coordinator	tbd	
Native American Liaison	tbd	
Other Coordinators:	tbd	

Project Purpose and Need** –

Purpose. The purpose of the project is as follows:

1) To improve traffic operations at the U.S. 101/De La Cruz Boulevard/Trimble Road Interchange, including through movements crossing over U.S. 101 and turning movements at the interchange.
2) To improve mobility and safety for bicyclists and pedestrians across the interchange;
3) To improve the interchange design to enhance safety for vehicles merging onto southbound U.S. 101 within the De La Cruz Boulevard interchange;
4) To improve the structural adequacy of the existing bridge structure.

Need. The project is needed to relieve existing and future traffic congestion, improve traffic operations and safety, and to improve bicycle and pedestrian safety, as described below.

- The existing local road intersections at the east and west ends of the interchange currently operate at Level of Service (LOS) F in the PM Peak Hour and are anticipated to operate at unacceptable conditions in the future. The City of San Jose General Plan plans for intensification of the land use density along the North First Street and Zanker Road corridors in northern San Jose. This intensification of use will place greater demands on key access routes to North First Street, including Trimble Road/De La Cruz Boulevard at U.S. 101.
- Currently, there is no pedestrian/bicycle access on Trimble Road/De La Cruz Boulevard between the interchange and the Central Expressway. The existing interchange does not meet federal and state policies and local guidelines related to Complete Streets (e.g. H.R. 1780, AB 1354 – Complete Streets Act of 2008, Caltrans Directive DD-64-R1 – Complete Streets: Integrating the Transportation System, and VTA Bicycle Technical Guidelines), where roadway improvement projects are to be designed for multimodal use in balance with community goals, addressing the safety and mobility needs of bicyclists, pedestrians and transit users of all ages and abilities. A continuous sidewalk on the north side of the overcrossing and bike lanes in both directions through the interchange should be provided to accommodate pedestrians and bicyclists in addition to motorists. Bicyclists traveling in the southbound and northbound directions on De La Cruz Boulevard must negotiate the high speed right turn lanes to the on-ramps of northbound and southbound U.S. 101. The geometric configuration at this location is not bicycle/pedestrian friendly. In addition, this roadway segment is classified by VTA as a corridor of bicycle travel significance that is identified as a "Cross County Bicycle Corridor" (CCBC) in the 2008 Santa Clara County Bicycle Plan.
- Accident rates for the southbound on and off loop ramps are 40 to 60 percent higher than the state average for similar facilities. This can be attributed to the short weave distance for those ramps on southbound U.S. 101.
- The U.S. 101/De La Cruz Boulevard/Trimble Road overcrossing structure (Bridge No. 370180) was built in 1961 and had a minimum structural sufficiency rating of 80 in 2009. This bridge does not meet current design standards and will need to be replaced in the near future.

** The Transportation Planning PDT Representative is responsible for providing the PDT with the system-wide and corridor level deficiencies identified by Transportation Planning. The PDT uses the information provided by Transportation Planning to develop the purpose and need with contributions from other Caltrans functional units and external stakeholders at the initiation of the PID and is refined throughout the PID process. As the project moves past the project initiation stage and more data becomes available, the purpose and need is refined. For additional information on purpose and need see: www.dot.ca.gov/hq/env/emo/purpose_need.htm

1. Project Funding:

a	List all known and potential funding sources and percent splits: (ie. State Transportation Improvement Program (STIP)/State Highway Operations and Protection Program (SHOPP)/Transportation Enhancement (TE)/Environmental Enhancement and Mitigation (EEM)/Safe Routes to School (SR2S)/etc.).
b	Is this a measure project? Yes__/No X. If yes, name and describe the measure.

2. Regional Planning:

a	Name of and contact information for Metropolitan Planning Organization (MPO) or Regional Transportation Planning Agency (RTPA).
	David Kobayashi - (408) 321-5892
b	Name of and contact information for local jurisdiction (City or County)
	Henry Servin - (408) 277-4217
c	Provide the page number and project description as identified in the Regional Transportation Plan (RTP) and the date of adoption, or provide an explanation if not in RTP.
	VTP 2035 Page 35.
d	Provide nexus between the RTP objectives and the project to establish the basis for the project purpose and need.
	US 101/Trimble Rd./De La Cruz Blvd./Central Expwy. Interchange improvements
e	Is the project located in an area susceptible to sea-level rise?
	No
f	Name of Air Quality Management District (AQMD)
	BAAQMD
g	If the project is located in a federal non-attainment or attainment-maintenance area is the project:
	• Regionally Significant? (per 40 (Code of Federal Regulations (CFR) 93.101) Y__/N_x_
	• Exempt from conformity? (per 40 CFR 93.126 and 93.128) Y__/N_x_
	• Exempt from regional analysis? (per 40 CFR 93.127) Y_x_/N__
	• Not exempt from conformity (must meet all requirements)? Y_x_/N__

3. Native American Consultation and Coordination:

a	If project is within or near an Indian Reservation or Rancheria? If so, provide the name of Tribe.
	N/A
b	Has/have the Tribal Government(s) been consulted? Y___/N__. If no, why not?
	N/A
c	If the project requires Caltrans to use right-of-way on trust or allotted lands, this information needs to be included as soon as possible as a key topic in the consultation with the Tribe(s). Has the Tribe been consulted on this topic? Y___/N__. If no, why not?
	N/A
d	Has the Bureau of Indian Affairs (BIA) been notified? Y__/N__
	N/A
e	Have all applicable Tribal laws, ordinances and regulations [Tribal Employment Rights Ordinances (TERO), etc.] been reviewed for required contract language and coordination?
	N/A
f	If the Tribe has a TERO, is there a related Memorandum of Understanding between the District and the Tribe?
	N/A
g	Has the area surrounding the project been checked for prehistoric, archeological, cultural, spiritual, or ceremonial sites, or areas of potentially high sensitivity? If such areas exist, has the Tribe, Native

	American Heritage Commission or other applicable persons or entities been consulted?
	N/A
h	If a Native American monitor is required for this project, will this cost be reflected in cost estimates?
	N/A
i	In the event of project redesign, will the changes impact a Native American community as described above in d, e, or h?
	N/A

4. System Planning:

a	Is the project consistent with the DSMP? Y_x_/N__. If yes document approval date. If no, explain.
	December 2011
b	Is the project identified in the TSDP? Y_ x _/N__? If yes, document approval date____. If no, explain.
c	Is the project identified in the TCR/RCR or CSMP? Y_ x _/N__. If yes, document approval date 12/2010___. If no, explain. Is the project consistent with the future route concept? Y_ x _/N__. If no, explain.
d	Provide the Concept Level of Service (LOS) through project area. E
e	Provide the Concept Facility – include the number of lanes. Does the Concept Facility include High Occupancy Vehicle lanes? Y_ x _/N__.
	8 Lanes
f	Provide the Ultimate Transportation Corridor (UTC) – include the number of lanes. Does the UTC include High Occupancy Vehicle Lanes? Y_ x _/N__.
	10 Lanes (3 lanes plus 2 Express Lanes in each direction)
g	Describe the physical characteristics of the corridor through the project area (i.e. flat, rolling or mountainous terrain...).
	Flat urban
h	Is the highway in an urban or rural area? Urban_ x _/Rural__. Provide Functional Classification.
i	Is facility a freeway, expressway or conventional highway?
	Local Interchange with Freeway
j	Provide Route Designations: (i.e. Interregional Transportation Strategic Plan (ITSP) High Emphasis or Focus Route, Surface Transportation Assistance Act (STAA) Route, Scenic Route…).
	STAA Route
k	Describe the land uses adjacent to project limits (i.e. agricultural, industrial…).
	Commercial, industrial, airport
l	Describe any park and ride facility needs identified in the TCR/CSMP, local plans, and RTP.
	None.
m	Describe the Forecasted 10 and 20-year Vehicle Miles Traveled (VMT), Annual Average Daily Traffic (AADT), and Peak Hour truck data in the TCR. Include the source and year of Forecast, and names and types of traffic and travel demand analysis tools used.

	2010 Existing	2010 Project	2010 Project - No Project	2035 No Project	2035 Project	2035 Project - No Project
AM VMT	2,950,702	2,949,926	-776	4,673,135	4,668,570	-4,565
AM VHT	100,630	100,423	-207	253,397	252,190	-1,207
PM VMT	3,134,600	3,122,115	-12,485	5,061,272	5,038,474	-22,798
PM VHT	108,694	107,371	-1,323	311,968	303,321	-8,647

Values represent totals for all Roadways in Santa Clara County for AM and PM Peak Hour Conditions. Source is from MTC and VTA models using Cube Voyager Travel Demand Model software.

n	Has analysis on Daily Vehicle Hours of Delay (DVHD) from the Highway Congestion Monitoring Program (HICOMP) been completed and included? Y__/N_ x _.

5. Local Development – Intergovernmental Review (LD-IGR):

List LD-IGR projects that may directly or indirectly impact the proposed Caltrans project or that the proposed Caltrans project may impact. (Attach additional project information if needed.)

LD-IGR Project Information		**Project**
a	County-Route-Postmile & Distance to Development.	
b	Development name, type, and size.	
c	Local agency and/or private sponsor, and contact information.	
d	California Environmental Quality Act (CEQA) status and Implementation Date.	
e	If project includes federal funding, National Environmental Policy Act (NEPA) status.	
f	All vehicular and non-vehicular unmitigated impacts and planned mitigation measures including Transportation Demand Management (TDM) and Transportation System Management (TSM) that would affect Caltrans facilities.	
g	Approved mitigation measures and implementing party.	
h	Value of constructed mitigation and/or amount of funds provided.	
i	Encroachment Permit, Transportation Permit, Traffic Management Plan, or California Transportation Commission (CTC) Access approvals needed.	
j	Describe relationship to Regional Blueprint, General Plans, or County Congestion Management Plans.	
k	Inclusion in a Regional Transportation Plan Sustainable Community Strategy or Alternative Planning Strategy?	

l	Regional or local mitigation fee program in place?	

6. Community Planning:

	INITIAL PID INFORMATION
a	Has lead agency staff worked with any neighborhood/community groups in the area of the proposed improvements? Y__/N x __. If yes, summarize the process and its results including any commitments made to the community. If no, why not?
b	Are any active/completed/proposed Environmental Justice (EJ) or Community-Based Transportation (CBTP) Planning Grants in the project area? Y__/N_ x _. If yes, summarize the project, its location, and whether/how it may interact with the proposed project.
c	Describe any community participation plans for this PID including how recommendations will be incorporated and/or addressed. Has a context sensitive solutions (CSS) approach been applied? Yx _/N_
	Participation in PAED.
	FINAL PID INFORMATION
d	How will the proposed transportation improvements impact the local community? Is the project likely to create or exacerbate existing environmental or other issues, including public health and safety, air quality, water quality, noise, environmental justice or social equity? Y__/N_ x _. Describe issues, concerns, and recommendations (from sources including neighborhood/community groups) and what measures will be taken to reduce existing or potential negative effects. See attached PEAR document.
e	Does this highway serve as a main street? Y__/N_ x _. If yes, what main street functions and features need to be protected or preserved?

7. Freight Planning:

	INITIAL PID INFORMATION
a	Identify all modal and intermodal facilities that may affect or be affected by the project.
	San Jose International Airport
	FINAL PID INFORMATION
b	Describe how the design of this project could facilitate or impede Goods Movement and relieve choke points both locally and statewide through grade separations, lane separations, or other measures (e.g., special features to accommodate truck traffic and at-grade railroad crossings).
	The project improves local access to the freeway. The revised interchange geometry also eliminates the short weaving section between the southbound loop off- and on-ramps which will improve traffic flow along the mainline, especially along the outer lanes which are usually used by trucks.
c	Describe how the project integrates and interconnects with other modes (rail, maritime, air, etc.). Do possibilities exist for an intermodal facility or other features to improve long-distance hauling, farm-to-market transportation and/or accessibility between warehouses, storage facilities, and terminals?
	SJC is adjacent to project. De La Cruz Boulevard provides connection to San Jose General Aviation Airport side of SJC.
d	Is the project located in a high priority goods movement area, included in the Goods Movement Action Plan (GMAP) or on a Global Gateways Development Program (GGDP) route? Y__/N_ x _. If yes, describe.
e	Is the project on a current and/or projected high truck volume route [e.g., Average Annual Daily Truck Traffic (AADTT) of 5 axle trucks is greater than 3000]? Yes_ x _/N__. If yes, describe how the project addresses this demand.
	Project maintains existing lanes on US 101
f	If the project is located near an airport, seaport, or railroad depot, describe how circulation (including

	truck parking) needs are addressed.
	SJC is adjacent to project. De La Cruz Boulevard provides connection to San Jose General Aviation Airport side of SJC.
g	Describe any other freight issues.

8. Transit (bus, light rail, commuter rail, intercity rail, high speed rail):

	INITIAL PID INFORMATION
a	List all local transit providers that operate within the corridor.
	Santa Clara VTA
b	Have transit agencies been contacted for possible project coordination? Y_ x _/N__. If no, why not?
c	Describe existing transit services and transit features (bus stops, train crossings, and transit lines) within the corridor.
	Bus service provided on US 101 and on De La Cruz Boulevard. No stops within project limits.
d	Describe transit facility needs identified in short- and long-range transit plans and RTP. Describe how these future plans affect the corridor.
	No change from today.
	FINAL PID INFORMATION
e	Describe how the proposed project integrates transit and addresses impacts to transit services and transit facilities.
	No change from today.
f	Have transit alternatives and improvement features been considered in this project? Y__/N_ x _ If yes, describe. If no, why not?
	Outside the scope of this project.

9. Bicycle:

	INITIAL PID INFORMATION
a	Does the facility provide for bicyclist safety and mobility needs? If no, please explain.
	Yes, bicycle lanes are provided along De La Cruz Boulevard.
b	Are any improvements for bicyclist safety and mobility proposed for this facility by any local agencies or included in bicycle master plans? If yes, describe (including location, time frame, funding, etc.).
	Yes, bicycle lanes are provided along De La Cruz Boulevard.
c	Are there any external bicycle advocacy groups and bicycle advisory committees that should be included in the project stakeholder list? If so, provide contact information.
	Yes, Santa Clara County Bike Coalition.
	FINAL PID INFORMATION
d	Will bicycle travel deficiencies be corrected? How or why not?
	Yes, bicycle lanes are provided along De La Cruz Boulevard.
e	How will this project affect local agency plans for bicycle safety and mobility improvements?
	It will improve bicycle safety and mobility.
f	If the project is the construction of a new freeway or modification to an existing freeway, will it sever or destroy existing provisions for bicycle travel? If yes, describe how bicycle travel provisions will be included in this project.
	No.

10. Pedestrian including Americans with Disabilities Act (ADA):

	INITIAL PID INFORMATION
a	Does this facility provide for pedestrian safety and mobility needs? If so, describe pedestrian facilities.

	Do continuous and well-maintained sidewalks exist? Are pedestrians forced to walk in the roadway at any locations due to lack of adequate pedestrian facilities? Please explain.
	Yes, 10 ft sidewalk will be provided along the north side of De La Cruz. The ramps will be signalized for pedestrian crossing.
b	Are pedestrian crossings located at reasonable intervals?
	Yes
c	Are all pedestrian facilities within the corridor ADA accessible and in compliance with Federal and State ADA laws and regulations?
	Yes
	FINAL PID INFORMATION
d	Will pedestrian travel deficiencies be corrected? How or why not?
	Yes, 10 ft sidewalk will be provide along the north side of De La Cruz. The ramps will be signalized for pedestrian crossing.
e	How will this project affect local agency plans for pedestrian safety and mobility improvements?
	It will improve predestrian safty and mobility.
f	If the project is the construction of a new freeway or modification to an existing freeway, will it sever or destroy existing provisions for pedestrian travel? If yes, describe how pedestrian travel provisions will be included in this project.
	No.
g	Are there any external pedestrian advocacy groups and advisory committees that should be included in the project stakeholder list? If so, provide contact information.
	No.
h	Have ADA barriers as noted in the District's ADA Transition Plan been identified within the project limits? If not included in the project, provide justification and indicate whether District Design coordinator approval was obtained.
	Yes.

11. Equestrian:

	INITIAL PID INFORMATION
a	If this corridor accommodates equestrian traffic, describe any project features that are being considered to improve safety for equestrian and vehicular traffic?
	No. Not applicable
	FINAL PID INFORMATION
b	Have features that accommodate equestrian traffic been identified? If so, are they included a part of this project? Describe. If no, why not?
	No. Not applicable

12. Intelligent Transportation Systems (ITS):

	INITIAL PID INFORMATION
a	Have ITS features such as closed-circuit television cameras, signal timing, multi-jurisdictional or multimodal system coordination been considered in the project? Y_X_/N__. If yes, describe. If no, explain.
	The ramp intersections will be signalized and coordinated with the local street intersection. The on-ramps will be metered.
	FINAL PID INFORMATION
b	Have ITS features been identified? If so, are they included a part of this project? Describe. If no, why not?
	Yes. The ramp intersection will be signalized and coordinated with the local street intersection. The on-ramps will be metered.

ATTACHMENT E:

Conceptual Cost Estimate – Right of Way Data Component

CONCEPTUAL COST ESTIMATE – RIGHT OF WAY COMPONENT

To: David Kobayashi, VTA

Date 6/15/12

Dist-Co-Rte-PM 04-SCl-101 PM 40.0/41.5

From: Keith Meyer, R&M

Project ID 04-26470K

EA

Project Description US 101/De La Cruz Blvd. Interchange Modification

A Field Review was conducted _x_ Yes ____ No

Scope of the Right of Way

Provide a general description of the right of way including the location attributes.

Right of Way Required _x_ Yes ____ No

Number of Parcels _x (4)_ 1-10 ____ 11-25 ____ 26-50 ____ 51-100 ____ >100

_x_ Urban ____ Rural

Land Area: Fee 116,409 sf Easement _____

Displaced Persons/Businesses ____ Yes _x_ No

Demolition/Clearance ____ Yes _x_ No

Railroad Involvement ____ Yes _x_ No

Utility Involvements _x_ Yes ____ No _3_ Number of Utilities in area

Cost Estimates

Support Costs	____ $0-$25,000	____ $500,001-$1,000,000
____	$25,001-$100,000	____ $1,000,001-$5,000,000
____	$100,001-$250,000	____ $5,000,001-$10,000,000
	_x_ $250,001-$500,000	____ >$10,000,000
Capital Costs	____ $0-$100,000	____ $5,000,001-$15,000,000
____	$100,001-$500,000	____ $15,000,001-$50,000,000
____	$500,001-$1,000,000	____ $50,000,001-$100,000,000
	_x_ $1,000,001-$5,000,000	____ >$ 100,000,000

Schedule

Right of Way will require _18_ months to deliver a Right of Way Certification #1 from Environmental Clearance. This estimate is based on a Right of Way Certification date of _12/1/2013_.

Areas of Concern

Provide a description of areas in close proximity to the project footprint that are likely to result in complex right of way issues if impacted (i.e. junkyards, cemeteries, utility towers, etc.).

PG&E overhead lines run longitudinally through the area. Will require longitudinal encroachment exception.

Parcel 1 is privately owned. Parcels 2, 3 and 4 are owned by the City of San Jose for San Jose International Airport.

Assumptions and Limiting Conditions

Provide a description of assumptions and limiting conditions.

Estimate Premise

1. Estimates are forecasts of anticipated costs for properties that will be acquired at a future date.
2. Estimate requires looking into the future and projecting the anticipated highest and best use of the properties at the time they are required for the project. The estimate will not consider increases in real estate value due to changes in land use resulting from anticipation of the proposed project.
3. The estimate will be developed using appraisal principles without the depth of investigation and verification. The estimate may consider indicators of value which may not be acceptable in appraising.
4. The estimate will consider costs known as Construction Contract Work (CCW) as severance damages and included as compensation to the owner.
5. The estimator has based the estimate on the highest supported anticipated costs and a “worst case” scenario.
6. When in doubt because of inadequate or marginal requirement information, a full acquisition will be assumed.

Assumptions

1. Estimate mapping is assumed to adequately provided information on which partial acquisition and damages are based.
2. The right of way area calculations are assumed to reflect the needs for the project or alternative. Changes in the areas may dramatically impact the estimated right of way costs.
3. The assumptions were made as no title reports were provided and its assumed access rights were previously acquired.

Limiting Conditions

1. Utility locations and information of property rights have not been fully researched and utility costs are based on field observations and cost information provided by others. More accurate costs will be developed as the project approaches selection of final alignment and design.

DIST	COUNTY	LOCATION CODE	POST MILES TOTAL PROJECT	SHEET NO.	TOTAL SHEETS
04	SCL	101	40.0/41.5		

PROFESSIONAL CIVIL ENGINEER

PLANS APPROVAL DATE

REGISTERED PROFESSIONAL ENGINEER No. Exp. CIVIL STATE OF CALIFORNIA

SANTA CLARA VALLEY
TRANSPORTATION AUTHORITY
3331 NORTH 1ST STREET
SAN JOSE, CALIFORNIA 95140

RAJAPPAN & MEYER
CONSULTING ENGINEERS, INC.
1038 LEIGH AVENUE, SUITE 100
SAN JOSE, CALIFORNIA 95126

The State of California or its officers or agents shall not be responsible for the accuracy or completeness of electronic copies of this plan sheet.

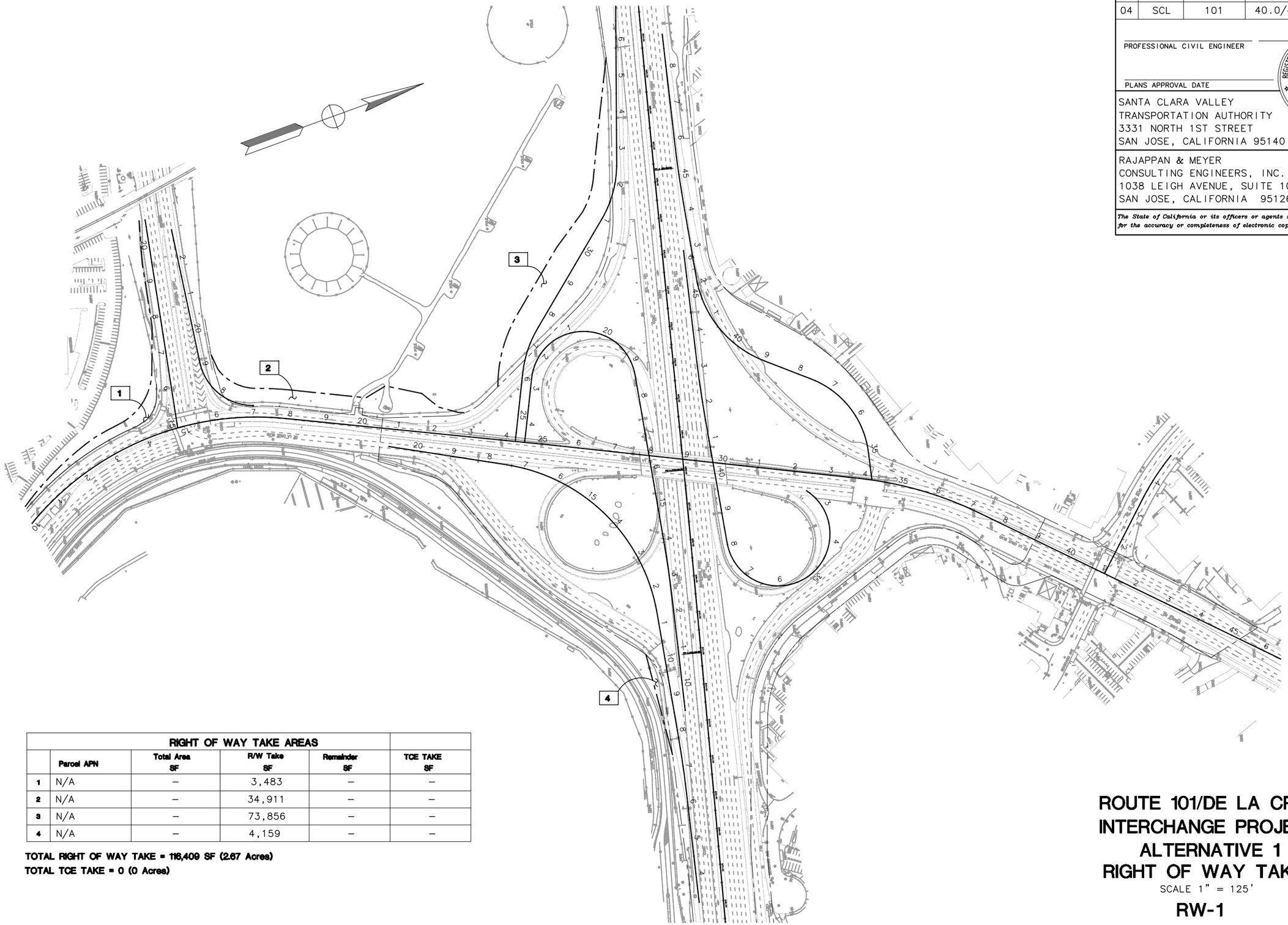

RIGHT OF WAY TAKE AREAS					
	Parcel APN	Total Area SF	R/W Take SF	Remainder SF	TCE TAKE SF
1	N/A	–	3,483	–	–
2	N/A	–	34,911	–	–
3	N/A	–	73,856	–	–
4	N/A	–	4,159	–	–

TOTAL RIGHT OF WAY TAKE = 116,409 SF (2.67 Acres)
TOTAL TCE TAKE = 0 (0 Acres)

ROUTE 101/DE LA CRUZ INTERCHANGE PROJECT ALTERNATIVE 1 RIGHT OF WAY TAKE

SCALE 1" = 125'

RW-1

CALCULATED/DESIGNED BY	D.B.	DATE 11/11	REVISED BY	S.G
CHECKED BY	V.R.	11/11	DATE REVISED	6/12

DESIGN OVERSIGHT

STATE OF CALIFORNIA – DEPARTMENT OF TRANSPORTATION

Caltrans

$REQUEST

LAST REVISION 00-00-00 | DATE PLOTTED => $DATE | TIME PLOTTED => $TIME

RELATIVE BORDER SCALE IS IN INCHES 0 1 2 3

USERNAME => $USER
DGN FILE => $REQUEST

CU | EA 264700

Project Study Report – Project Development Support
Capital Outlay Project Estimate

Dist - Co – Rte 04-SCL-101

PM 40.0/41.5

Program Code 4173.00

Project Number 26470K

Month/Year October 2012

PROJECT DESCRIPTION:

Limits: From 0.7 mile north of De La Cruz Blvd/Trimble Road Overcrossing to 0.8 mile south of De La Cruz Blvd/Trimble Road Overcrossing

Proposed Improvement (Scope): Reconstruction of existing De La Cruz Blvd/Trimble Road Overcrossing at US101 including reconstruction of ramps and widening of De La Cruz Blvd and Trimble Road.

Alternative: Build Alternative (Type L-9 Partial Cloverleaf Interchange)

SUMMARY OF PROJECT COST ESTIMATE

TOTAL ROADWAY ITEMS	$ 14,900,000
TOTAL STRUCTURE ITEMS	$ 8,300,000
TOTAL ENVIRONMENTAL MITIGATION ITEMS	$ 100,000
SUBTOTAL CONSTRUCTION COSTS	$ 23,300,000
TOTAL RIGHT-OF-WAY ITEMS	$ 4,700,000
TOTAL PROJECT CAPITAL OUTLAY COSTS	$ 28,000,000

I. ROADWAY ITEMS

	Average Cost per Lane Mile		Number of Lane Miles		Total Cost
Total Cost	$1,600,000	X	9.3	=	$14,900,000

Explanation:

The Average Cost per Lane Mile was calculated by first including cost for major items such as earthworks, pavement, lump sum costs for drainage, specialty items such as highway planting and water pollution control and traffic items such as traffic signals and lighting. An additional 10% cost was added to the total of the major items to account for other minor items. To this total cost, an additional 10% was added for mobilization, another 10% added for supplemental works and 25% for contingencies.

Estimate prepared by: William Devabalan, P.E. (Tel: (408) 280-2772)

TOTAL ROADWAY ITEMS $14,900,000

II. STRUCTURES ITEMS

	Structure (1)	Structure (2)	Structure (3)
Bridge Name	Trimble Rd OC	_____	_____
Total Cost for Structure	$8,300,000	_____	_____

Explanation:

The Total Cost for Structure was based on applying $200 per square foot to the proposed bridge area. The cost per square foot includes 10% mobilization cost and 25% for contingencies. The Total Cost for Structure also includes cost for removal of existing bridge.

Estimate prepared by: Allen Wang, P.E. (Tel: (408) 280-2772)

TOTAL STRUCTURE ITEMS $8,3000,000

III. ENVIRONMENTAL MITIGATION

	Quantity	Unit		Unit Price		Item Cost
Environmental Mitigation	1	LS	X	$100,000	=	$100,000

Explanation:

Environmental Mitigation cost includes cost for potential species protection works for burrowing owls and other ground nesting birds known to live in the project area.

Estimate prepared by: William Devabalan, P.E. (Tel: (408) 280-2772)

TOTAL ENVIRONMENTAL MITIGATION ITEMS $100,000

IV. RIGHT-OF-WAY ITEMS

	Escalated Value
A. Acquisition, including excess lands, damages to remainder(s) and Goodwill	$ 4,550,000
B. Utility Relocation (State share)	$ 150,000

Anticipated Date of Right-of-Way Certification 12/1/2013
(Date to which values are escalated)

Explanation:

Total Right-of-Way Items cost includes cost for acquiring 2.7 acres from 3 parcels belonging to the City of San Jose and 1 private parcel. An allowance was provided for potential utility relocation especially due to widening of De La Cruz Blvd and Trimble Road.

Estimate (acquisition) prepared by: Mike Lahodny (BRI) (Tel: (916) 978-4800)
Estimate (utility) prepared by: John Beebe (AEC) (Tel: (408) 970-9888)

TOTAL RIGHT-OF-WAY ITEMS $4,700,000

ATTACHMENT F:

Stormwater Documentation

Long Form - Storm Water Data Report

Dist-County-Route: **04-SCL-101**
Post Mile Limits: **PM 40.0/41.5**
Project Type: **Interchange Reconstruction**
Project ID (or EA): **EA 04-234-264700**
Program Identification: **800.100**
Phase: ☒ PID
☐ PA/ED
☐ PS&E

Regional Water Quality Control Board(s): Region 2, San Francisco Bay

Is the Project required to consider Treatment BMPs? Yes ☒ No ☐

If yes, can Treatment BMPs be incorporated into the project? Yes ☒ No ☐

If No, a Technical Data Report must be submitted to the RWQCB at least 30 days prior to the projects RTL date. List RTL Date:_____

Total Distributed Soil Area: **34.8 acres** Risk Level: **1**

Estimated: Construction Start Date: **May 2015** Construction Completion Date: **October 2017**

Notification of Construction (NOC) Date to be submitted: **Apr 1, 2015**

Erosivity Waiver	Yes ☐	Date:_____	No ☒
Notification of ADL reuse (if Yes, provide date)	Yes ☒	Date: **TBD**	No ☐
Separate Dewatering Permit (if yes, permit number)	Yes ☐	Permit #_____	No ☒

This Report has been prepared under the direction of the following Licensed Person. The Licensed Person attests to the technical information contained herein and the date upon which recommendations, conclusions, and decisions are based. Professional Engineer or Landscape Architect stamp required at PS&E.

June 18, 2012

William D. Arulsingam, Registered Civil Engineer — Date

I have reviewed the stormwater quality design issues and find this report to be complete, current and accurate:

Dina A. El-Tawansy, *Project Manager* — *Date*

********, *Designated Maintenance Representative* — *Date*

********, *Designated Landscape Architect Representative* — *Date*

[Stamp Required for PS&E only) ******** *District/Regional Design SW Coordinator* — *Date*

STORM WATER DATA INFORMATION

1. Project Description

The City of San Jose and the Santa Clara Valley Transportation Authority (VTA) propose to construct improvements to the Route 101/De La Cruz Boulevard/Trimble Road interchange and adjacent local street intersections within the City of San Jose and Santa Clara County in order to lessen existing and future traffic congestion, improve traffic operations and safety, and to improve bicycle and pedestrian circulation and safety.

The project includes reconstructing the existing three-quadrant cloverleaf interchange to a Type L-9 partial cloverleaf interchange, and includes the following elements:

- Reconstruct the existing OC bridge from four-lane to eight-lane facility using pre-cast girders to reduce structure depth, to provide standard vertical clearance over Route 101 and Airway-Highway Clearance Requirements (San Jose International Civil Airport).
- Modify existing De La Cruz Boulevard to provide an additional lane in each direction from Trimble Road to Central Expressway.
- Reconstruct the Route 101 northbound on-ramp from De La Cruz Blvd to provide improved ramp meter storage and improved bicycle lane and pedestrian crossing safety.
- Modify the Route 101 northbound loop on-ramp from De La Cruz Boulevard to accommodate the OC bridge widening.
- Modify the Route 101 southbound loop on-ramp from De La Cruz Boulevard to accommodate the OC bridge widening, and to provide a right-angle intersection for improved bicycle lane and pedestrian crossing safety.
- Construct a new intersection at the terminus of the Route 101 southbound off-ramp at De La Cruz Boulevard.
- Reconstruct the Route 101 southbound on-ramp from De La Cruz Blvd to provide improved ramp meter storage and improved bicycle lane safety.
- Provide a pedestrian sidewalk and Class II bicycle lane on the north side of De La Cruz Boulevard between Trimble Road and Central Expressway.
- Provide reconstructed ramp metering systems and HOV bypass lanes at each on-ramp.
- Reconstruct the intersection of De La Cruz Boulevard and Trimble Road to provide bike lanes and additional turn lanes.
- Reconstruct the intersection of De La Cruz Boulevard and Central Expressway to provide bike lanes, additional through and turn lanes, and lane transition as needed on Central Expressway.
- Modify or construct fiber optic interconnection of traffic signals at the intersections of Trimble Road, NB Route 101 Ramps, SB Route 101 Ramps, and Central Expressway.
- Provide low height roadway and compliance with FAA glide slope clearance requirements.
- Reconstruct a portion of the San Jose International Airport ILS landing light system that crosses De La Cruz Boulevard.
- Modify existing drainage systems to accommodate the interchange improvements and implement storm water quality BMPs.
- The Disturbed Soil Area (DSA) of the proposed project within the State right of way is 34.8 acres. The Disturbed Soil Area is the area disturbed to accommodate new pavement construction,

cut/fill slope construction, excavation to construct bridge footings, construction of infiltration basin, ditches, and swales, The DSA has been determined from design plans (CAD drawings) superimposed over the existing topography of the project area.

- The existing impervious surface is 19.7 acres, and the impervious surface area after the project is completed is 21.0 acres. The net new impervious area that will result from the project is 1.3 acres.
- The proposed project is located in the City of San Jose in Santa Clara County, California.
- The proposed project falls within the City of San Jose Municipal Separate Storm Sewer System (MS4).

2. Site Data and Storm Water Quality Design Issues (refer to Checklists SW-1, SW-2, SW-3)

The Hydrologic Unit for the project area is San Jose, Guadalupe River watershed. The watershed area is 108,800 acres.

- The San Francisco Bay Regional Water Quality Control Board (RWQCB) has jurisdiction over the project area.

- Several water bodies within the Guadalupe River system are listed as impaired in the 303(d) list of water quality limited segments. The main contaminant for which these water bodies listed is mercury, whose potential source is listed as mine tailings and surface mining. Those water bodies listed as impaired by mercury include 8.1 miles of Guadalupe Creek, 63 acres of Guadalupe Reservoir, and 18 miles of Guadalupe River. These water bodies did not have a TMDL for mercury developed at the printing of the list in 2006, but TMDLs are scheduled to be developed as part of the Santa Clara Basin Watershed Management Initiative. The 18 miles of Guadalupe River are also listed as being impaired from and having an approved TMDL for, diazinon, whose potential source is urban runoff and storm sewers carrying pesticide residue. Other water bodies within the Guadalupe River watershed on the 303(d) List is 10 miles of Rincon Creek, which is listed as being impaired from, and requiring TMDLs for Boron and Toxicity, both of which have unknown sources. The proposed TMDL completion date for Rincon Creek is 2019.

- 401 Certification is not required as there are no known jurisdictional wetlands or surface water bodies located within the project area.

- There are no seasonal construction restrictions for construction.

- The estimated construction period for this project is June 2014 to December 2016.

- The project site has an average annual total precipitation of about 14.7 inches. Of this, about 9.6 inches, or 65 percent, usually falls between November and February. Summers are very dry, with normally less than one half inch of rain between June and September. The rainfall intensity is 2.88 in/hr for a 5 minute - 25-year storm event and 2.3 in/hr for a 5 minute - 10-year storm event. **Intensity-Duration-Frequency (IDF) data** for the project area is provided in **Attachment 6**. The rainy season has been defined by the RWQCB as the period from October 15 to April 15.

- Based on information from the National Resources Conservation Service (NRCS) Web Soil Survey the following soil types are present in the project area:

Hydraulic Soil Group	**Hydraulic Soil Group**
101 – Urban land 0 to 2% slopes, Basins	D
145 – Urban land - hangerone Complex 0 to 2% slopes, Drained	D
146 – Hangerome Clay loam, Drained, 0 to 2% Slopes	C
160 – Urban land-Clear Lake Complex 0 to 2% Slopes	C
165 – Urban land-Campbell Complex 0 to 2% Slopes, Protected	D

The soil information is extracted from National Resources Conservation Service Soil Report Santa Clara Area, California, Western Part

- The percolation rate for the soil in the project area is estimated to be about 0.6 inches/hour. The soil has moderate soil erodibility factor, K, of between 0.02 and 0.69. From the Preliminary Phase I Initial Site Assessment by Parikh Consultants, and based on review of the USGS maps, the elevation of the project is roughly 35 feet above mean sea level. Review of information from sites nearby confirms the northerly gradient with a trend towards the northwest.

- Depth of groundwater ranges from 10-20 feet within the project area.

- A Phase I Initial Site Assessment (ISA) Update was performed for the purposed Route 101/De La Cruz Blvd. Interchange Project in San Jose, Santa Clara County, California. The purpose of this investigation was to identify and evaluate potential hazardous waste sites and update the evaluation factors that may have affected the soil and groundwater quality in the project vicinity due to Past and present environmental and commercial activities. The ISA Update was performed between September 1 and October 10, 2011 and identified the following:

- Aerial Lead Deposition, the project area is a traffic-bearing road in Santa Clara County. Due to this vehicular traffic activity the soils along the corridor are likely contaminated with lead from exhaust of cars burning leaded gasoline. The lead levels in surface soils along highways can reach concentrations in excess of the hazardous waste threshold, requiring disposal at either a class I landfill or on-site stabilization. A work plan for investigation of ADL should be submitted

and work should be performed according to an approved work plan. This work should be performed during the design phase.

- Asbestos Containing Materials and lead based Paint. There are road overcrossing, and interchange structures within the proposed project right of way. Due to the age of these structures there is a potential for presence of asbestos containing material (ACM) and lead based paint. An ACM should be performed by certified inspector by Asbestos Hazardous Emergency Response Act (AHERA). This work should be performed during the design phase.
- Impact from Farm Operations Prior 1960, the area surrounding the project area was occupied by farmland. It is likely that the soils are impacted with pesticides and herbicides, including arsenic, as a result of historical farming operations. It is recommended that soil samples be collected to the depth of the proposed excavation areas and analyzed for these components.

- Land uses in the project and surrounding site are commercial, Airport, warehousing, manufacturing, storage facilities and industrial uses, with railroad overcrossing east of the interchange area. The terrain is generally flat with slopes ranging from 0 to 3 percent. No surficial evidence of active or past landslides was noted.

- There are no receiving waters that may be affected by the project throughout the project life cycle as the project does not discharge into any surface water bodies.

- The Project will be designed and constructed to minimize storm water runoff impacts by limiting the disturbance to existing vegetation, and utilizing all appropriate design pollution prevention, treatment, and construction site Best Management Practices (BMPs). Such practices will include:
    - Minimize impact during roadway and bridge construction,
    - Minimize and construct as flat as feasible cut and fill areas,
    - Minimize disturbing existing slopes,
    - Provide cut slopes flat enough to allow re-vegetation and limit erosion,
    - Incorporate slope rounding,
    - Incorporating design that will allow for ease of maintaining all BMPs.
    - Stage construction in such a way that will minimize disturbance to new and existing slopes.

3. Regional Water Quality Control Board Agreements

To date, there are no unique agreements with the Regional Water Quality Control Board (RWQCB) specific to this project.

4. Proposed Design Pollution Prevention BMPs to be used on the Project.

<u>Downstream Effects Related to Potentially Increased Flow, Checklist DPP-1, Parts 1 and 2</u>

- The total paved area is reduced to the maximum extent possible.
- No direct discharges into creeks or waters of the U.S are planned in this project. Hence, no channel lining or bank protection is required as part of this project.

- The existing runoff from Route 101 is conveyed as sheet flow across the roadway side slopes and drain into the ditches along the toe of slopes of the freeway. The existing runoff from northbound on ramp is conveyed as sheet flow across the ramp side slopes and into an existing basin which is surrounded by De La Cruz Blvd, Route 101 and the northbound on-ramp.
- The storm runoff generated within the project area must be contained in a series of retention basins. A system of roadway drainage ditches, inlets and pipe culverts will be proposed to convey runoff from paved areas to the proposed retention basins. The detailed drainage design will be developed during the PS&E phase, using all applicable Caltrans and District 4 design standards.
- On the Route 101 mainline and interchange ramps, 4:1 embankment slopes are proposed. Storm water will sheet flow on 4:1 embankment slopes into the vegetated ditches. Runoff from all the impervious areas will be drained into the retention basins via underground drainage systems. De La Cruz Blvd. will have curb and gutter and inlets at the outer roadway edges to collect and convey runoff. Detailed hydraulic analysis and design will be completed in PS&E phase.

Slope/Surface Protection Systems, Checklist DPP-1, Parts 1 and 3

- Existing cut and fill slopes are approximately 4 horizontal to 1 vertical.
- New embankment slopes will be 4 horizontal to 1 vertical and cut slopes will be 2 horizontal to 1 vertical.
- The side slopes of the new section of the infiltration basin will be 3 horizontal to 1 vertical. The slopes of the existing portion of the infiltration basin vary from 2:1 to 4:1. The side slopes of new swales and ditches will be 4 horizontal to 1 vertical.
- Vegetated cut and fill surfaces will be proposed to prevent erosion and filter pollutants in storm water runoff.

Concentrated Flow Conveyance Systems, Checklist DPP-1, Parts 1 and 4

- Some drainage inlets will be proposed and will intercept and direct surface runoff to the proposed retention basins.
- Flared culvert end sections (FES) will be proposed to improve the hydraulic operation, retain the embankment near pipe conveyances and to help prevent scour and erosion.
- Outlet protection and energy dissipating devices will be proposed for the infiltration basin inflow, and pipe culvert outfalls.

Preservation of Existing Vegetation, Checklist DPP-1, Parts 1 and 5

- Existing vegetation will be preserved as much as possible to provide erosion and sediment control benefits wherever the existing side slopes are not disturbed. Erosion Control and Temporary Water Pollution Control Plans design will be completed in PS&E phase.

5. Proposed Temporary Construction Site BMPs to be used on Project

- Project activities temporarily create Disturbed Soil Area (DSA), as defined by Caltrans' guidance manuals. As many as 34.8 acres of existing ground are anticipated to be disturbed, and without implementing Best Management Practices (BMPs), would be subject to erosion. Since more than

1.0 acre of soil is being disturbed, the Contractor is required to prepare a Storm Water Pollution Prevention Plan (SWPPP), pursuant to the Construction General Permit (CGP) Order 2009-0009-DWQ, which became effective on July 1, 2010.

- A dust Control Plan has to be filed with the Air Quality Control Board since the DSA for the project is more than 5 acres.
- Measures to avoid and reduce potential impacts to water quality from the construction area will be specified in the SWPPP. The SWPPP is developed by the contractor and submitted to the Caltrans resident engineer for approval prior to the start of construction. The SWPPP incorporates the applicable temporary construction site BMPs for the project. The SWPPP is intended to document the site specific BMPs selected to employ the Best Available Technology economically achievable and Best Conventional Pollutant Control Technology to reduce or eliminate pollutants in construction site storm water runoff.
- Construction Site BMPs are anticipated to be designated as separate Bid Line Items are as follows:

Item Code	Item Description
074016	Construction Site Management
074019	Prepare Storm Water Pollution Prevention Plan
074028	Temporary Fiber Roll
074029	Temporary Silt Fence
074033	Temporary Construction Entrance
074034	Temporary Cover
074037	Move-in/Move-out (Temporary Erosion Control)
074038	Temporary Drainage Inlet Protection
074041	Street Sweeping
074042	Temporary Concrete Washout (Portable)
074051	Temporary Hydraulic Mulch
074056	Rain Event Action Plan
074057	Storm Water Annual Report
203021	Fiber Rolls
203026	Move-in/Move-out (Erosion Control)
203032	Erosion Control (Hydroseed)
203033	Rolled Erosion Control Product (Blanket)

- In addition, the project anticipated to have the following items under Supplemental Work:

Item Code	Item Description
066595	Water Pollution Control Maintenance Sharing
066596	Additional Water Pollution Control
066597	Storm Water Sampling and Analysis

- Construction Site BMPs that are incorporated as a lump sum in the Construction Site Management item include spill prevention and control, material management, waste management, non-storm water management, and dewatering and identifying, sampling, testing, handling, and disposing of hazardous waste.

The project has a Low Receiving Water Risk Factor. The Site Sediment Risk Factor is Low. The Risk Level determined for the project is Level 1. The project **risk level determination** information is provided in **Attachment 8**.

6. Maintenance BMPs (Drain Inlet Stenciling)

The Project is located in San Jose, Santa Clara County, which falls under urban areas regulated under a MS4 permit. All proposed drainage inlets if any adjacent to pedestrian facilities shall be stenciled during construction. Stencil types shall be those referenced in the standard specifications, special provisions and San Jose standard plans.

Attachments

1. Project Vicinity Map
2. Evaluation Documentation Form
3. Drainage Plan
4. Storm Water Checklists (SW-1, SW-2 and SW-3)
5. Design Pollution Prevention BMPs Checklist (DPP-1, Parts 1 through 5)
6. Intensity-Duration-Frequency (IDF) Information
7. Construction Site BMP Consideration Form
8. Risk Level Determination Worksheet

Attachment 1
Project Vicinity Map

Project Vicinity Map
Route 101/De La Cruz interchange

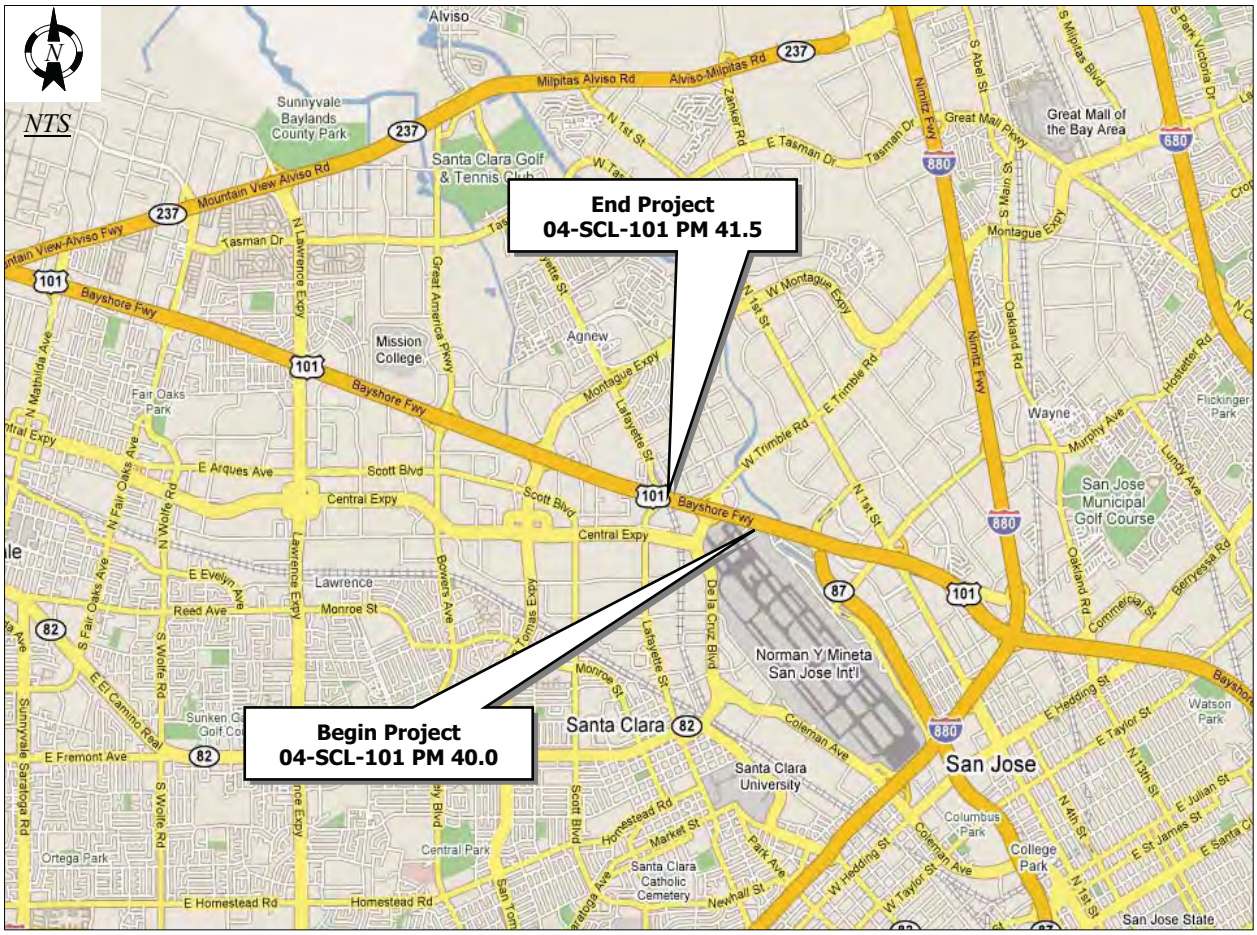

Attachment 2
Evaluation Documentation Form

DATE: **December 2011**

Project ID (or EA): 1000000100

NO.	CRITERIA	YES ✓	NO ✓	SUPPLEMENTAL INFORMATION FOR EVALUATION
1.	Begin Project Evaluation regarding requirement for consideration of Treatment BMPs	✓		See Figure 4-1, Project Evaluation Process for Consideration of Permanent Treatment BMPs. Go to 2
2.	Is this an emergency project?		✓	If **Yes**, go to 10. If **No**, continue to 3.
3.	Have TMDLs or other Pollution Control Requirements been established for surface waters within the project limits? Information provided in the water quality assessment or equivalent document.	✓		If **Yes**, contact the District/Regional NPDES Coordinator to discuss the Department's obligations under the TMDL (if Applicable) or Pollution Control Requirements, go to 9 or 4. _____ *(Dist./Reg. SW Coordinator initials*) If **No**, continue to 4.
4.	Is the project located within an area of a local MS4 Permittee?	✓		If **Yes**. *(The project is located in San Jose municipal limits)*, go to 5. If **No**, document in SWDR go to 5.
5.	Is the project directly or indirectly discharging to surface waters?		✓	If **Yes**, continue to 6. If **No**, go to 10.
6.	Is it a new facility or major reconstruction?			If **Yes**, continue to 8. If **No**, go to 7.
7.	Will there be a change in line/grade or hydraulic capacity?			If **Yes**, continue to 8. If **No**, go to 10.
8.	Does the project result in a net increase of one acre or more of new impervious surface?			If **Yes**, continue to 9. If **No**, go to 10. *(Net Increase New Impervious Surface)*
9.	Project is required to consider approved Treatment BMPs.		See Sections 2.4 and either Section 5.5or 6.5 for BMP Evaluation and Selection Process. Complete Checklist T-1 in this Appendix E.	
10.	Project is not required to consider Treatment BMPs. _____*(Dist./Reg. Design SW Coord. Initials)* GM *(Project Engineer Initials)* *12/12/2011 (Date)*		Document for Project Files by completing this form, and attaching it to the SWDR.	

Attachment 3
Drainage Plan

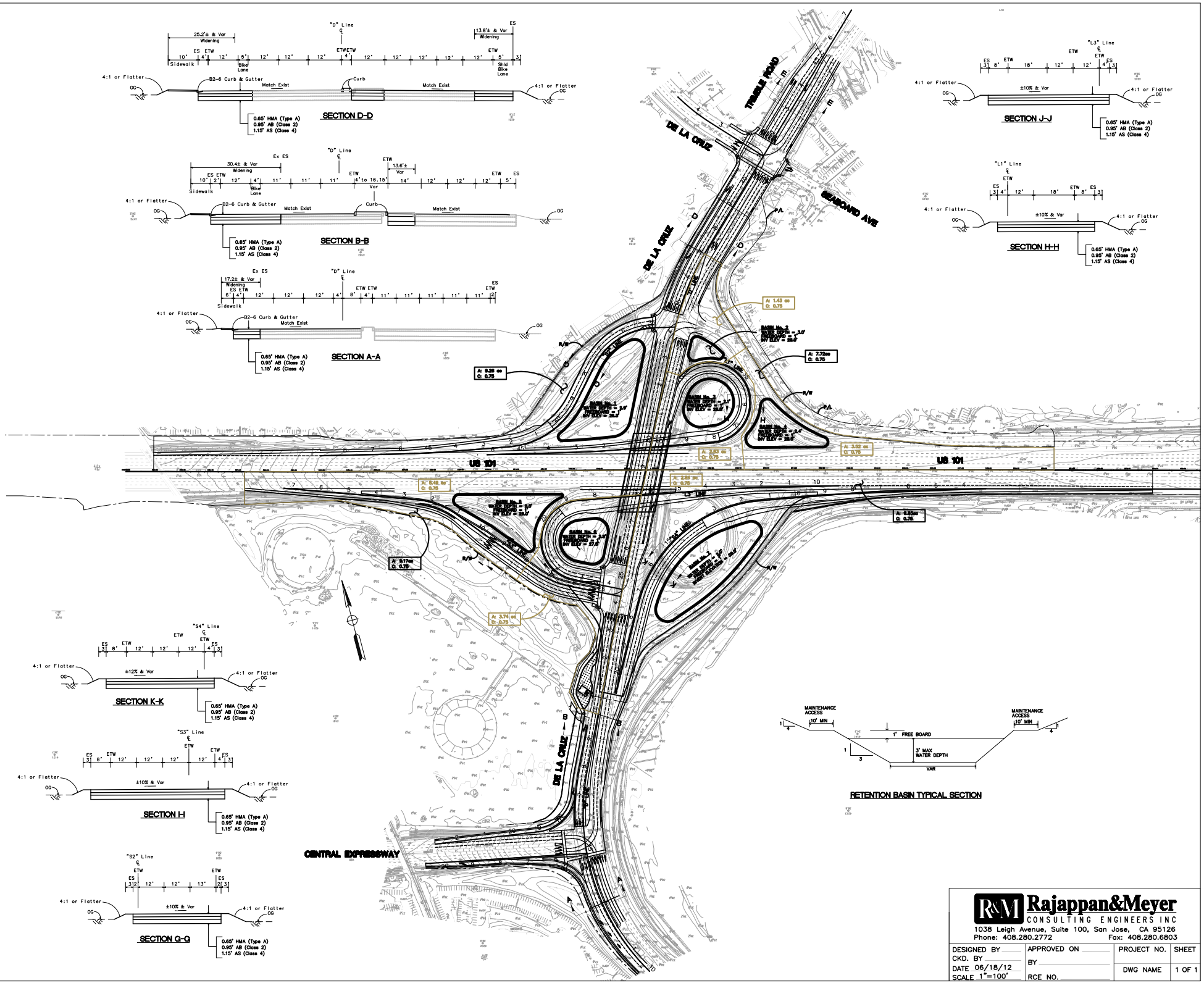

R&M Rajappan&Meyer
CONSULTING ENGINEERS INC
1038 Leigh Avenue, Suite 100, San Jose, CA 95126
Phone: 408.280.2772 Fax: 408.280.6803

DESIGNED BY	APPROVED ON	PROJECT NO.	SHEET
CKD. BY	BY	DWG NAME	1 OF 1
DATE 06/18/12			
SCALE 1"=100'	RCE NO.		

Attachment 4
Storm Water Checklists
(SW-1, SW-2 and SW-3)

Checklist SW-1, Site Data Sources

Prepared by: Husam Aburabi Date: December 2011 District-Co-Route: 04-SCL-101

PM :40.0/41.5 Project ID (or EA): EA 04-234-264700 RWQCB: San Francisco Bay Region

Information for the following data categories should be obtained, reviewed and referenced as necessary throughout the project planning phase. Collect any available documents pertaining to the category and list them and reference your data source. For specific examples of documents within these categories, refer to Section 5.5 of this document. Example categories have been listed below; add additional categories, as needed. Summarize pertinent information in Section 2 of the SWDR.

DATA CATEGORY/SOURCES	Date
Topographic	
• Engineering Survey	May 2008
• National Geographic's Seamless USGS Topographic Maps on CD-ROM - California	2001
• Field Trips	September 2011
Hydraulic	
• Preliminary Drainage Report – Rajappan & Meyer Consulting Engineers, Inc.	December 2011
• FHWA, HEC – 22 Urban Drainage Design Manual	August 2001
Soils	
• Preliminary Geotechnical Report – PARIKH Consultants, Inc	October 2011
• National Conservation Resources Service Soil Report: Santa Clara area, California, Western Part.	November 2011
Climatic	
• Natural Resources Conservation Service National Water and Climate Center	2000
• California Climate Data Archive	2009
Water Quality	
• State Water Resources Control Boards approving List of 303(d) Waters	October 2006
• Storm Water Data Report (PA/ED)	December 2011
• Basin Plan – California RWQCB (San Francisco Bay Region-Water Board	2011
Other Data Categories	
•	

Checklist SW-2, Storm Water Quality Issues Summary

Prepared by: Husam Aburabi Date: June 2012 District-Co-Route: 04-SCL-101

PM :40.0/41.5 Project ID (or EA): EA 04-234-264700 RWQCB: San Francisco Bay Region

The following questions provide a guide to collecting critical information relevant to project stormwater quality issues. Complete responses to applicable questions, consulting other Caltrans functional units (Environmental, Landscape Architecture, Maintenance, etc.) and the District/Regional Storm Water Coordinator as necessary. Summarize pertinent responses in Section 2 of the SWDR.

1. Determine the receiving waters that may be affected by the project throughout the project life cycle (i.e., construction, maintenance and operation). ***Guadalupe River***	☐Complete	☒NA
2. For the project limits, list the 303(d) impaired receiving water bodies and their constituents of concern. ***Guadalupe River – Diazinon, Pesticide Residue and Mercury.***	☐Complete	☒NA
3. Determine if there are any municipal or domestic water supply reservoirs or groundwater percolation facilities within the project limits. Consider appropriate spill contamination and spill prevention control measures for these new areas. ***There are no water supply reservoirs or groundwater percolation facilities within the project limits.***	☒Complete	☐NA
4. Determine the RWQCB special requirements, including TMDLs, effluent limits, etc. ***TMDL main concern is for Diazinon, Mercury and other pollutants.***	☒Complete	☐NA
5. Determine regulatory agencies seasonal construction and construction exclusion dates or restrictions required by federal, state, or local agencies. ***There are no regulatory exclusion dates or restrictions.***	☒Complete	☐NA
6. Determine if a 401 certification will be required. ***401 certification is not required.***	☒Complete	☐NA
7. List rainy season dates. ***October 15 through April 15***	☒Complete	☐NA
8. Determine the general climate of the project area. Identify annual rainfall and rainfall intensity curves. ***The project site has an average annual total precipitation of about 14.7 inches. Of this, about 9.6 inches, or 65 percent, usually falls between November and February. Summers are very dry, with normally less than one half inch of rain between June and September. The rainfall intensity is 2.88 in/hr for a 5 minute - 25-year storm event and 2.3 in/hr for a 5 minute - 10-year storm event.***	☒Complete	☐NA
9. If considering Treatment BMPs, determine the soil classification, permeability, erodibility, and depth to groundwater. ***Based on information from the National Resources Conservation Service (NRCS) Soil Survey, the following soil types are present in the project area: Hydraulic Soil Group of C or D. The permeability of the soil is estimated to be about 0.6 inches per hour. The soil has erodibility factor, K, of between 0.02 and 0.69. Depth of groundwater ranges from 10 to 20 feet along the corridor.***	☒Complete	☐NA

10. Determine contaminated soils within the project area. ***Presence of hazardous material will be determined during the PA/ED phase.***	☒Complete	☐NA
11. Determine the total disturbed soil area of the project. ***The total disturbed soil area (DSA) of the project within the State right of way is 34.8 acres.***	☒Complete	☐NA
12. Describe the topography of the project site. ***The terrain is generally flat with slopes ranging from 0 to 4 percent.***	☒Complete	☐NA
13. List any areas outside of the Caltrans right-of-way that will be included in the project (e.g. contractor's staging yard, work from barges, easements for staging, etc.). ***Roadway improvements are proposed on De La Cruz Blvd, Trimble Rd and Central Expressway.***	☒Complete	☐NA
14. Determine if additional right-of-way acquisition or easements and right-of-entry will be required for design, construction and maintenance of BMPs. If so, how much?	☐Complete	☒NA
15. Determine if a right-of-way certification is required. ***Right-of-way certification will be required.***	☒Complete	☐NA
16. Determine the estimated unit costs for right-of-way should it be needed for Treatment BMPs, stabilized conveyance systems, lay-back slopes, or interception ditches.	☐Complete	☒NA
17. Determine if project area has any slope stabilization concerns. ***There are no slope stabilization concerns in this area.***	☒Complete	☐NA
18. Describe the local land use within the project area and adjacent areas. ***An aerial photo shows development and parking lot in the southwest side of the interchange on the airport property. The aerial photo also shows development of the northern side of the interchange with commercial properties. There appears a vacant lot on the southwest of the interchange. This lot is used as clearance air space for the departing flights from the Norm Minetta San Jose International Airport.***	☒Complete	☐NA
19. Evaluate the presence of dry weather flow. ***There are no dry weather flows within the project area.***	☒Complete	☐NA

Checklist SW-3, Measures for Avoiding or Reducing Potential Storm Water Impacts

Prepared by: Husam Aburabi Date: December 2011 District-Co-Route: 04-SCL-101

PM :40.0/41.5 Project ID (or EA): EA 04-234-264700 RWQCB: San Francisco Bay Region

The PE must confer with other functional units, such as Landscape Architecture, Hydraulics, Environmental, Materials, Construction and Maintenance, as needed to assess these issues. Summarize pertinent responses in Section 2 of the SWDR.

Options for avoiding or reducing potential impacts during project planning include the following:

1. Can the project be relocated or realigned to avoid/reduce impacts to receiving waters or to increase the preservation of critical (or problematic) areas such as floodplains, steep slopes, wetlands, and areas with erosive or unstable soil conditions?	☐Yes	☒No	☐NA
The existing interchange is proposed to be modified. There will not be any alignment changes made to Route 101.			
2. Can structures and bridges be designed or located to reduce work in live streams and minimize construction impacts?	☐Yes	☐No	☒NA
There is no bridge work within live streams in the project area.			
3. Can any of the following methods be utilized to minimize erosion from slopes:			
a. Disturbing existing slopes only when necessary?	☒Yes	☐No	☐NA
b. Minimizing cut and fill areas to reduce slope lengths?	☒Yes	☐No	☐NA
c. Incorporating retaining walls to reduce steepness of slopes or to shorten slopes?	☒Yes	☐No	☐NA
d. Acquiring right-of-way easements (such as grading easements) to reduce steepness of slopes?	☐Yes	☒No	☐NA
e. Avoiding soils or formations that will be particularly difficult to re-stabilize?	☐Yes	☒No	☐NA
f. Providing cut and fill slopes flat enough to allow re-vegetation and limit erosion to pre-construction rates?	☒Yes	☐No	☐NA
g. Providing benches or terraces on high cut and fill slopes to reduce concentration of flows?	☐Yes	☐No	☒NA
No high cut/fill in this project.			
h. Rounding and shaping slopes to reduce concentrated flow?	☒Yes	☐No	☐NA
i. Collecting concentrated flows in stabilized drains and channels?	☒Yes	☐No	☐NA
4. Does the project design allow for the ease of maintaining all BMPs?	☒Yes	☐No	
5. Can the project be scheduled or phased to minimize soil-disturbing work during the rainy season?	☒Yes	☐No	

6. Can permanent storm water pollution controls such as paved slopes, vegetated slopes, basins, and conveyance systems be installed early in the construction process to provide additional protection and to possibly utilize them in addressing construction storm water impacts?

☒ Yes ☐ No ☐ NA

Attachment 5
Design Pollution Prevention BMPs Checklist
(DPP-1, Parts 1 through 5)

Design Pollution Prevention BMPs
Checklist DPP-1, Part 1

Prepared by: Husam Aburabi Date: December 2011 District-Co-Route: 04-SCL-101

PM :40.0/41.5 Project ID (or EA): EA 04-234-264700 RWQCB: San Francisco Bay Region

Consideration of Design Pollution Prevention BMPs

Consideration of Downstream Effects Related to Potentially Increased Flow [to streams or channels

Will project increase velocity or volume of downstream flow?	☒Yes	☐No	☐NA
Will the project discharge to unlined channels?	☒Yes	☐No	☐NA
Will project increase potential sediment load of downstream flow?	☒Yes	☐No	☐NA
Will project encroach, cross, realign, or cause other hydraulic changes to a stream that may affect downstream channel stability?	☐Yes	☒No	☐NA

If Yes was answered to any of the above questions, consider ***Downstream Effects Related to Potentially Increased Flow***, complete the DPP-1, Part 2 checklist.

Slope/Surface Protection Systems

Will project create new slopes or modify existing slopes?	☒Yes	☐No	☐NA

If Yes was answered to the above question, consider ***Slope/Surface Protection Systems***, complete the DPP-1, Part 3 checklist.

Concentrated Flow Conveyance Systems

Will the project create or modify ditches, dikes, berms, or swales?	☒Yes	☐No	☐NA
Will project create new slopes or modify existing slopes?	☒Yes	☐No	☐NA
Will it be necessary to direct or intercept surface runoff?	☒Yes	☐No	☐NA
Will cross drains be modified?	☐Yes	☐No	☒NA

If Yes was answered to any of the above questions, consider ***Concentrated Flow Conveyance Systems***; complete the DPP-1, Part 4 checklist.

Preservation of Existing Vegetation

It is the goal of the Storm Water Program to maximize the protection of desirable existing vegetation to provide erosion and sediment control benefits on all projects. ☒Complete

Consider ***Preservation of Existing Vegetation***, complete the DPP-1, Part 5 checklist.

Design Pollution Prevention BMPs
Checklist DPP-1, Part 2

Prepared by: Husam Aburabi Date: December 2011 District-Co-Route: 04-SCL-101

PM :40.0/41.5 Project ID (or EA): EA 04-234-264700 RWQCB: San Francisco Bay Region

Downstream Effects Related to Potentially Increased Flow

1. Review total paved area and reduce to the maximum extent practicable. ☒Complete
2. Review channel lining materials and design for stream bank erosion control. ☒Complete
   (a) See Chapters 860 and 870 of the HDM. ☒Complete
   (b) Consider channel erosion control measures within the project limits as well as downstream. Consider scour velocity. ☒Complete
3. Include, where appropriate, energy dissipation devices at culvert outlets. ☒Complete
4. Ensure all transitions between culvert outlets/headwalls/wingwalls and channels are smooth to reduce turbulence and scour. ☒Complete
5. Include, if appropriate, peak flow attenuation basins or devices to reduce peak discharges. ☒Complete

Design Pollution Prevention BMPs
Checklist DPP-1, Part 3

Prepared by: Husam Aburabi Date: December 2011 District-Co-Route: 04-SCL-101

PM :40.0/41.5 Project ID (or EA): EA 04-234-264700 RWQCB: San Francisco Bay Region

Slope / Surface Protection Systems

1. What are the proposed areas of cut and fill? (attach plan or map) ☐Complete
   Will be provided at PS&E Design Level
2. Were benches or terraces provided on high cut and fill slopes to reduce concentration of flows? ☐Yes ☒No
   No high cut and fill slopes in this project.
3. Were slopes rounded and/or shaped to reduce concentrated flow? ☒Yes ☐No
4. Were concentrated flows collected in stabilized drains or channels? ☒Yes ☐No
5. Are new or disturbed slopes > 4:1 horizontal:vertical (h:v)? ☒Yes ☐No

   If Yes, District Landscape Architect must prepare or approve an erosion control plan, at the District's discretion.

   Erosion Control/Temporary Water Pollution Control Plans will be completed in PS&E stage.
6. Are new or disturbed slopes > 2:1 (h:v)? ☐Yes ☒No

   If Yes, Geotechnical Services must prepare a Geotechnical Design Report, and the District Landscape Architect should prepare or approve an erosion control plan. Concurrence must be obtained from the District Maintenance Storm Water Coordinator for slopes steeper than 2:1 (h:v).
7. Estimate the net new impervious area that will result from this project. **1.30** acres ☒Complete

VEGETATED SURFACES

1. Identify existing vegetation. ☒Complete
2. Evaluate site to determine soil types, appropriate vegetation and planting strategies. ☐Complete
   Will be completed at PS&E stage.
3. How long will it take for permanent vegetation to establish? ☐Complete
4. Minimize overland and concentrated flow depths and velocities. ☒Complete

HARD SURFACES

1. Are hard surfaces required? ☐Yes ☒No

   If Yes, document purpose (safety, maintenance, soil stabilization, etc.), types, and general locations of the installations. ☐Complete

Review appropriate SSPs for Vegetated Surface and Hard Surface Protection Systems. ☐Complete

SSPs will be provided at PS&E Stage.

Design Pollution Prevention BMPs
Checklist DPP-1, Part 4

Prepared by: Husam Aburabi Date: December 2011 District-Co-Route: 04-SCL-101

PM :40.0/41.5 Project ID (or EA): EA 04-234-264700 RWQCB: San Francisco Bay Region

Concentrated Flow Conveyance Systems

Ditches, Berms, Dikes and Swales

1. Consider Ditches, Berms, Dikes, and Swales as per Topics 813, 834.3, and 835, and Chapter 860 of the HDM. ☒Complete
2. Evaluate risks due to erosion, overtopping, flow backups or washout. ☒Complete
3. Consider outlet protection where localized scour is anticipated. ☒Complete
4. Examine the site for run-on from off-site sources. ☒Complete
5. Consider channel lining when velocities exceed scour velocity for soil. ☒Complete

Overside Drains

1. Consider downdrains, as per Index 834.4 of the HDM. ☒Complete
2. Consider paved spillways for side slopes flatter than 4:1 h:v. ☐Complete

   Not applicable.

Flared Culvert End Sections

1. Consider flared end sections on culvert inlets and outlets as per Chapter 827 of the HDM. ☒Complete

Outlet Protection/Velocity Dissipation Devices

1. Consider outlet protection/velocity dissipation devices at outlets, including cross drains, as per Chapters 827 and 870 of the HDM. ☒Complete

Review appropriate SSPs for Concentrated Flow Conveyance Systems. ☐Complete

SSPs will be provided at PS&E Stage.

Design Pollution Prevention BMPs

Checklist DPP-1, Part 5

Prepared by: Husam Aburabi Date: December 2011 District-Co-Route: 04-SCL-101

PM :40.0/41.5 Project ID (or EA): EA 04-234-264700 RWQCB: San Francisco Bay Region

Preservation of Existing Vegetation

1. Review Preservation of Property, Standard Specifications 16.1.01 and 16-1.02 (Clearing and Grubbing) to reduce clearing and grubbing and maximize preservation of existing vegetation. ☒Complete

2. Has all vegetation to be retained been coordinated with Environmental, and identified and defined in the contract plans? ☐Yes ☒No
   Will be completed at PS&E stage
3. Have steps been taken to minimize disturbed areas, such as locating temporary roadways to avoid stands of trees and shrubs and to follow existing contours to reduce cutting and filling? ☒Complete
   PS&E Stage
4. Have impacts to preserved vegetation been considered while work is occurring in disturbed areas? ☒Yes ☐No

5. Are all areas to be preserved delineated on the plans? ☐Yes ☒No
   PS&E Stage

Attachment 6
Intensity-Duration-Frequency (IDF) Information

NOAA Atlas 14, Volume 6, Version 2
Location name: San Jose, California, US*
Coordinates: 37.3497, -121.9033
Elevation: 68 ft*
* source: Google Maps

POINT PRECIPITATION FREQUENCY ESTIMATES

Sanja Perica, Sarah Dietz, Sarah Heim, Lillian Hiner, Kazungu Maitaria, Deborah Martin, Sandra Pavlovic, Ishani Roy, Carl Trypaluk, Dale Unruh, Fenglin Yan, Michael Yekta, Tan Zhao, Geoffrey Bonnin, Daniel Brewer, Li-Chuan Chen, Tye Parzybok, John Yarchoan

NOAA, National Weather Service, Silver Spring, Maryland

PF_tabular | PF_graphical | Maps_&_aerials

PF tabular

PDS-based point precipitation frequency estimates with 90% confidence intervals (in inches/hour)[1]

Duration	Average recurrence interval (years)									
	1	2	5	10	25	50	100	200	500	1000
5-min	1.15 (1.01-1.33)	1.48 (1.30-1.72)	1.94 (1.68-2.26)	2.33 (2.00-2.74)	2.89 (2.38-3.55)	3.36 (2.69-4.24)	3.85 (2.99-5.02)	4.39 (3.29-5.93)	5.18 (3.68-7.36)	5.83 (3.98-8.65)
10-min	0.822 (0.720-0.954)	1.06 (0.924-1.23)	1.39 (1.21-1.61)	1.67 (1.43-1.96)	2.08 (1.70-2.54)	2.41 (1.93-3.04)	2.76 (2.14-3.59)	3.15 (2.36-4.25)	3.71 (2.64-5.27)	4.18 (2.85-6.20)
15-min	0.664 (0.580-0.768)	0.856 (0.744-0.992)	1.12 (0.972-1.30)	1.35 (1.16-1.58)	1.67 (1.38-2.05)	1.94 (1.55-2.44)	2.22 (1.73-2.90)	2.54 (1.90-3.42)	2.99 (2.13-4.25)	3.37 (2.30-5.00)
30-min	0.456 (0.398-0.528)	0.590 (0.514-0.684)	0.772 (0.670-0.898)	0.928 (0.796-1.09)	1.15 (0.948-1.41)	1.34 (1.07-1.68)	1.53 (1.19-1.99)	1.75 (1.31-2.36)	2.06 (1.47-2.93)	2.32 (1.58-3.44)
60-min	0.320 (0.279-0.370)	0.412 (0.359-0.478)	0.540 (0.469-0.628)	0.649 (0.557-0.763)	0.806 (0.663-0.989)	0.934 (0.748-1.18)	1.07 (0.833-1.40)	1.22 (0.917-1.65)	1.44 (1.03-2.05)	1.63 (1.11-2.41)
2-hr	0.238 (0.208-0.276)	0.302 (0.263-0.350)	0.391 (0.340-0.455)	0.468 (0.402-0.550)	0.580 (0.476-0.712)	0.671 (0.538-0.846)	0.770 (0.598-1.00)	0.878 (0.658-1.18)	1.04 (0.736-1.47)	1.17 (0.794-1.73)
3-hr	0.194 (0.169-0.225)	0.245 (0.214-0.285)	0.317 (0.275-0.369)	0.379 (0.326-0.446)	0.469 (0.386-0.576)	0.543 (0.435-0.686)	0.624 (0.484-0.812)	0.711 (0.533-0.959)	0.839 (0.597-1.19)	0.945 (0.644-1.40)
6-hr	0.130 (0.114-0.151)	0.165 (0.144-0.191)	0.213 (0.185-0.248)	0.255 (0.219-0.300)	0.316 (0.260-0.388)	0.366 (0.293-0.461)	0.419 (0.326-0.546)	0.478 (0.358-0.644)	0.562 (0.400-0.799)	0.633 (0.431-0.938)
12-hr	0.084 (0.074-0.098)	0.108 (0.094-0.125)	0.141 (0.122-0.164)	0.169 (0.145-0.199)	0.210 (0.173-0.258)	0.243 (0.195-0.307)	0.278 (0.216-0.362)	0.317 (0.237-0.427)	0.372 (0.264-0.528)	0.417 (0.284-0.618)
24-hr	0.053 (0.049-0.059)	0.069 (0.063-0.077)	0.091 (0.083-0.102)	0.109 (0.099-0.123)	0.136 (0.120-0.157)	0.157 (0.136-0.184)	0.179 (0.152-0.215)	0.202 (0.168-0.249)	0.236 (0.189-0.301)	0.263 (0.204-0.345)
2-day	0.034 (0.031-0.038)	0.045 (0.041-0.050)	0.059 (0.054-0.066)	0.070 (0.064-0.079)	0.086 (0.076-0.100)	0.099 (0.085-0.116)	0.111 (0.094-0.134)	0.125 (0.103-0.153)	0.143 (0.114-0.182)	0.158 (0.122-0.207)
3-day	0.026 (0.023-0.028)	0.034 (0.031-0.037)	0.044 (0.040-0.049)	0.053 (0.048-0.059)	0.064 (0.057-0.074)	0.073 (0.063-0.086)	0.082 (0.070-0.099)	0.091 (0.076-0.112)	0.104 (0.083-0.133)	0.114 (0.088-0.150)
4-day	0.021 (0.019-0.024)	0.028 (0.025-0.031)	0.036 (0.033-0.041)	0.043 (0.039-0.049)	0.053 (0.046-0.061)	0.060 (0.052-0.070)	0.067 (0.057-0.080)	0.074 (0.062-0.091)	0.084 (0.067-0.107)	0.092 (0.071-0.121)
7-day	0.015 (0.014-0.017)	0.020 (0.018-0.022)	0.025 (0.023-0.028)	0.030 (0.027-0.034)	0.036 (0.032-0.042)	0.041 (0.036-0.048)	0.046 (0.039-0.055)	0.051 (0.042-0.063)	0.058 (0.046-0.074)	0.063 (0.049-0.083)
10-day	0.012 (0.011-0.013)	0.015 (0.014-0.017)	0.019 (0.018-0.022)	0.023 (0.021-0.026)	0.028 (0.024-0.032)	0.031 (0.027-0.037)	0.035 (0.030-0.042)	0.039 (0.032-0.048)	0.044 (0.035-0.056)	0.048 (0.037-0.063)
20-day	0.008 (0.007-0.009)	0.010 (0.009-0.011)	0.013 (0.012-0.014)	0.015 (0.014-0.017)	0.018 (0.016-0.021)	0.020 (0.018-0.024)	0.023 (0.019-0.027)	0.025 (0.021-0.031)	0.028 (0.023-0.036)	0.031 (0.024-0.040)
30-day	0.006 (0.006-0.007)	0.008 (0.007-0.009)	0.010 (0.009-0.011)	0.012 (0.011-0.013)	0.014 (0.013-0.016)	0.016 (0.014-0.019)	0.018 (0.015-0.021)	0.020 (0.016-0.024)	0.022 (0.018-0.028)	0.024 (0.019-0.031)
45-day	0.005 (0.005-0.006)	0.007 (0.006-0.007)	0.008 (0.008-0.009)	0.010 (0.009-0.011)	0.012 (0.010-0.013)	0.013 (0.011-0.015)	0.014 (0.012-0.017)	0.016 (0.013-0.019)	0.018 (0.014-0.022)	0.019 (0.015-0.025)
60-day	0.005 (0.004-0.005)	0.006 (0.005-0.007)	0.007 (0.007-0.008)	0.009 (0.008-0.010)	0.010 (0.009-0.012)	0.012 (0.010-0.014)	0.013 (0.011-0.015)	0.014 (0.012-0.017)	0.015 (0.012-0.020)	0.017 (0.013-0.022)

[1] Precipitation frequency (PF) estimates in this table are based on frequency analysis of partial duration series (PDS).

Numbers in parenthesis are PF estimates at lower and upper bounds of the 90% confidence interval. The probability that precipitation frequency estimates (for a given duration and average recurrence interval) will be greater than the upper bound (or less than the lower bound) is 5%. Estimates at upper bounds are not checked against probable maximum precipitation (PMP) estimates and may be higher than currently valid PMP values.

Please refer to NOAA Atlas 14 document for more information.

Back to Top

PF graphical

Attachment 7
Construction Site BMP Consideration Form

DATE: June 2012

Project ID (or EA) : EA 04-234-264700

Project Evaluation Process for the Consideration of Construction Site BMPs

NO.	CRITERIA	YES ✓	NO ✓	SUPPLEMENTAL INFORMATION
1.	Will construction of the project result in areas of disturbed soil as defined by the Project Planning and Design Guide (PPDG)?	✓		If Yes, Construction Site BMPs for Soil Stabilization (SS) will be required. Complete CS-1, Part 1. Continue to 2. If No, Continue to 3.
2.	Is there a potential for disturbed soil areas within the project to discharge to storm drain inlets, drainage ditches, areas outside the right-of-way, etc?	✓		If Yes, Construction Site BMPs for Sediment Control (SC) will be required. Complete CS-1, Part 2. Continue to 3.
3.	Is there a potential for sediment or construction related materials and wastes to be tracked offsite and deposited on private or public paved roads by construction vehicles and equipment?	✓		If Yes, Construction Site BMPs for Tracking Control (TC) will be required. Complete CS-1, Part 3. Continue to 4.
4.	Is there a potential for wind to transport soil and dust offsite during the period of construction?	✓		If Yes, Construction Site BMPs for Wind Erosion Control (WE) will be required. Complete CS-1, Part 4. Continue to 5.
5.	Is dewatering anticipated or will construction activities occur within or adjacent to a live channel or stream?	✓		If Yes, Construction Site BMPs for Non-Storm Water Management (NS) will be required. Complete CS-1, Part 5. Continue to 6.
6.	Will construction include saw-cutting, grinding, drilling, concrete or mortar mixing, hydro-demolition, blasting, sandblasting, painting, paving, or other activities that produce residues?	✓		If Yes, Construction Site BMPs for Non-Storm Water Management (NS) will be required. Complete CS-1, Parts 5 & 6. Continue to 7.
7.	Are stockpiles of soil, construction related materials, and/or wastes anticipated?	✓		If Yes, Construction Site BMPs for Waste Management and Materials Pollution Control (WM) will be required. Complete CS-1, Part 6. Continue to 8.
8.	Is there a potential for construction related materials and wastes to have direct contact with precipitation; stormwater run-on, or stormwater runoff; be dispersed by wind; be dumped and/or spilled into storm drain systems?	✓		If Yes, Construction Site BMPs for Waste Management and Materials Pollution Control (WM) will be required. Complete CS-1, Part 6. Continue to 9.
9.	End of checklist.		Document for Project Files by completing this form, and attaching it to the SWDR.	

PE to initialize after concurrence with Construction (PS&E only) *Date*

Attachment 8
Risk Level Determination Worksheet

	A	B	C
1	**Sediment Risk Factor Worksheet**		**Entry**
2	**A) R Factor**		
3	Analyses of data indicated that when factors other than rainfall are held constant, soil loss is directly proportional to a rainfall factor composed of total storm kinetic energy (E) times the maximum 30-min intensity (I30) (Wischmeier and Smith, 1958). The numerical value of R is the average annual sum of EI30 for storm events during a rainfall record of at least 22 years. "Isoerodent" maps were developed based on R values calculated for more than 1000 locations in the Western U.S. Refer to the link below to determine the R factor for the project site.		
4	http://cfpub.epa.gov/npdes/stormwater/LEW/lewCalculator.cfm		
5	**R Factor Value**		94.09
6	**B) K Factor (weighted average, by area, for all site soils)**		
7	The soil-erodibility factor K represents: (1) susceptibility of soil or surface material to erosion, (2) transportability of the sediment, and (3) the amount and rate of runoff given a particular rainfall input, as measured under a standard condition. Fine-textured soils that are high in clay have low K values (about 0.05 to 0.15) because the particles are resistant to detachment. Coarse-textured soils, such as sandy soils, also have low K values (about 0.05 to 0.2) because of high infiltration resulting in low runoff even though these particles are easily detached. Medium-textured soils, such as a silt loam, have moderate K values (about 0.25 to 0.45) because they are moderately susceptible to particle detachment and they produce runoff at moderate rates. Soils having a high silt content are especially susceptible to erosion and have high K values, which can exceed 0.45 and can be as large as 0.65. Silt-size particles are easily detached and tend to crust, producing high rates and large volumes of runoff. Use Site-specific data must be submitted.		
8	Site-specific K factor guidance		
9	**K Factor Value**		0.28
10	**C) LS Factor (weighted average, by area, for all slopes)**		
11	The effect of topography on erosion is accounted for by the LS factor, which combines the effects of a hillslope-length factor, L, and a hillslope-gradient factor, S. Generally speaking, as hillslope length and/or hillslope gradient increase, soil loss increases. As hillslope length increases, total soil loss and soil loss per unit area increase due to the progressive accumulation of runoff in the downslope direction. As the hillslope gradient increases, the velocity and erosivity of runoff increases. Use the LS table located in separate tab of this spreadsheet to determine LS factors. Estimate the weighted LS for the site prior to construction.		
12	LS Table		
13	**LS Factor Value**		0.32
14			
15	**Watershed Erosion Estimate (=RxKxLS) in tons/acre**		8.430464
16	**Site Sediment Risk Factor**		**Low**
17	Low Sediment Risk: < 15 tons/acre		
18	Medium Sediment Risk: >=15 and <75 tons/acre		
19	High Sediment Risk: >= 75 tons/acre		
20			

Receiving Water (RW) Risk Factor Worksheet	Entry	Score
A. Watershed Characteristics	**yes/no**	
A.1. Does the disturbed area discharge (either directly or indirectly) to a **303(d)-listed waterbody impaired by sediment**? For help with impaired waterbodies please check the attached worksheet or visit the link below: 2006 Approved Sediment-impared WBs Worksheet http://www.waterboards.ca.gov/water_issues/programs/tmdl/303d_lists2006_epa.shtml **OR** A.2. Does the disturbed area discharge to a waterbody with designated beneficial uses of SPAWN & COLD & MIGRATORY? http://www.ice.ucdavis.edu/geowbs/asp/wbquse.asp	**No**	**Low**

Combined Risk Level Matrix

Receiving Water Risk	Sediment Risk: Low	Sediment Risk: Medium	Sediment Risk: High
Low	Level 1	Level 2	
High	Level 2		Level 3

Project Sediment Risk: Low

Project RW Risk: Low

Project Combined Risk: Level 1

ATTACHMENT G:

PSR-PDS Survey Needs Questionnaire

ARTICLE 8

PSR-PDS SURVEY NEEDS QUESTIONNAIRE

General Guidance:

The project datums, vertical and horizontal, need to be established as soon as possible in the schedule, and all other mapping adjusted to the project datums. Obsolete datums such as NAD27 and NGVD29 should not be used for new projects.

What Survey Control Datums will be used for project design and mapping?

Vertical Control

- ✓ NAVD 1988 (Preferred)
- ☐ NGVD 1929 (Alternative)
- ☐ Other (Must consult with Caltrans Surveys)

Horizontal Control

California Coordinate System of 1983

- ✓ Epoch 1991.35
- ☐ Other than CCS83 (Must consult with Caltrans Surveys)

Will the project need a Sea Level Rise Risk Assessment? NO

Does the project adjoin the ocean or tidal waterways? NO

Is the existing highway protected by levees, sea walls, or rip-rap? NO

Will existing as-builts, centerlines, or base mapping require any datum or unit conversions? NO

Are the right of way record maps current? YES

Is there any need to accelerate design accuracy surveys for this project? YES

ATTACHMENT H:

Risk Register

Project Risk Register

DIST- EA	04-234-26470K	Project Name:	Route 101/De La Cruz Interchange	Project Manager:	Keith Meyer		Date Created:	Last Updated:
		Co - Rte - PM:	04-SCL-101 PM 40.0/41.5	Telephone:	(408) 280-2772			

ITEM	ID #	Status	Threat / Opport-unity	Category	Date Risk Identified	Risk Discription	Root Causes	Primary Objective	Overall Risk Rating	Cost/Time Impact Value	Risk Owner	Risk Trigger	Strategy	Response Actions w/ Pros & Cons	Adjusted Cost/Time Impact Value	WBS Item	Status Date and Review Comments
	(a)	(b)	(c)	(d)	(e)	(f)	(g)	(h)	i)	(j)	(k)	(l)	(m)	(n)	(o)	(p)	(q)
1	04-234-26470K-01	Active	**Threat**	ENV	12/01/11	Environmental Schedule	Delay in getting PAED approved	TIME	Probablility 4=High (40-59%) **High** Impact 4 =High	High	VTA (408) 321-5892 david.kobayashi@vta.org	Review process by Caltrans	MITIGATE	Work with CT staff		165 PERFORM ENVIRONMENTAL STUDIES AND PREPARE DRAFT ENVIRONMENTAL DOCUMENT	
2	04-234-26470K-02	Active	**Threat**	EXT	12/01/11	Funding	Delay in getting funding for project	Time	Probablility 4=High (40-59%) **High** Impact 4 =High	High	VTA (408) 321-5892 david.kobayashi@vta.org	Submittal of DED	MITIGATE	Work with City of San Jose and CT for funding		165 PERFORM ENVIRONMENTAL STUDIES AND PREPARE DRAFT ENVIRONMENTAL DOCUMENT	
3	04-234-26470K-03	Active	**Threat**	ENV	07/26/12	Environmental Schedule	Need for NEPA if Federal Funds involved	TIME	Probablility 3=Med (20-39%) **Med** Impact 4 =High	High	VTA 4083215892 david.kobayashi@vta.org	Funding Source	MITIGATE	Streamline NEPA and CEQA processes		165 PERFORM ENVIRONMENTAL STUDIES AND PREPARE DRAFT ENVIRONMENTAL DOCUMENT	
4									Probablility Impact								
5									Probablility Impact								
6									Probablility Impact								
7									Probablility Impact								

Approved by:_____
date

ATTACHMENT I:

Quality Management Plan

Quality Management Plan

For Preparation of Project Initiation Documents for Locally Implemented Projects on the State Highway System

Date
June 2012

EXAMPLE AGREEMENT COVER SHEET

Abstract: This section briefly addresses the quality assurance and quality control procedures that will be implemented for the development, review and approval of Project Initial Documents (PIDs) for Highway System Projects Sponsored and/or implemented by local and regional agencies and others.

QUALITY MANAGEMENT PLAN
FOR
US 101 - De La Cruz Boulevard Interchange

Approved by Dina El Tawansy
Name, Caltrans Project Manager — Date

Approved by SCVTA — June 2012
Lead Implementing Agency — Date

David Kobayashi
Name, Lead Agency Project Manager

Approved by Keith Meyer - Rajappan & Meyer — June 2012
Name, Consultant Project Manager — Date

1.0 GENERAL

1.1 PROJECT DESCRIPTION

INTRODUCTION

The Santa Clara Valley Transportation Authority (VTA) and the City of San Jose propose to make the following key improvements to relieve existing and future traffic congestion at the U.S. 101/De La Cruz Boulevard/Trimble Road interchange:

- Reconstruct the existing three-quadrant cloverleaf interchange to a partial clover leaf design (Type L-9);
- Widen the overcrossing structure from four lanes to eight lanes;
- Realign the southbound off and on ramps from and to U.S. 101/De La Cruz Boulevard to facilitate a "bike and pedestrian friendly design;"
- Realign the northbound on ramps from U.S. 101/De La Cruz Boulevard to facilitate a "bike and pedestrian friendly design;" and
- Construct improvements at adjacent intersections on Trimble Road and De La Cruz Boulevard.

The proposed project will improve traffic operations and safety for bicyclists and pedestrians as well as motorists traveling across the interchange. The project will also improve traffic operations to the southbound merge onto U.S. 101.

PURPOSE AND NEED

Congestion in the vicinity of the U.S. 101 De La Cruz Boulevard/Trimble Road Interchange in San Jose exists today during the peak commute hours and is anticipated to increase in the future due to background growth, particularly in North San Jose and Santa Clara areas of Santa Clara County. The project purpose and need are described below:

Purpose. The purpose of the project is as follows:

1) To improve traffic operations at the U.S. 101/De La Cruz Boulevard/Trimble Road Interchange, including through movements crossing over U.S. 101 and turning movements at the interchange.
2) To improve mobility and safety for bicyclists and pedestrians across the interchange;
3) To improve the interchange design to enhance safety for vehicles merging onto southbound U.S. 101 within the De La Cruz Boulevard interchange;
4) To improve the structural adequacy of the existing bridge structure.

Need. The project is needed to relieve existing and future traffic congestion, improve traffic operations and safety, and to improve bicycle and pedestrian safety, as described below.

- The existing local road intersections at the east and west ends of the interchange currently operate at Level of Service (LOS) F in the PM Peak Hour and are anticipated to operate at unacceptable conditions in the future. The City of San Jose General Plan plans for intensification of the land use density along the North First Street and Zanker Road corridors in northern San Jose. This intensification of use will place greater demands on key access routes to North First Street, including Trimble Road/De La Cruz Boulevard at U.S. 101.
- Currently, there is no pedestrian/bicycle access on Trimble Road/De La Cruz Boulevard between the interchange and the Central Expressway. The existing interchange does not meet federal and state policies and local guidelines related to Complete Streets (e.g. H.R. 1780, AB 1354 – Complete Streets Act of 2008, Caltrans Directive DD-64-R1 – Complete Streets: Integrating the Transportation System, and VTA Bicycle Technical Guidelines), where roadway improvement projects are to be designed for multimodal use in balance with community goals, addressing the safety and mobility needs of bicyclists, pedestrians and transit users of all ages and abilities. A continuous sidewalk on the north side of the overcrossing and bike lanes in both directions through the interchange should be provided to accommodate pedestrians and bicyclists in addition to motorists. Bicyclists traveling in the southbound and northbound directions on De La Cruz Boulevard must negotiate the high speed right turn lanes to the on-ramps of northbound and southbound U.S. 101. The geometric configuration at this location is not bicycle/pedestrian friendly. In addition, this roadway segment is classified by VTA as a corridor of bicycle travel significance that is identified as a "Cross County Bicycle Corridor" (CCBC) in the 2008 Santa Clara County Bicycle Plan.
- Accident rates for the southbound on and off loop ramps are 40 to 60 percent higher than the state average for similar facilities. This can be attributed to the short weave distance for those ramps on southbound U.S. 101.
- The U.S. 101/De La Cruz Boulevard/Trimble Road overcrossing structure (Bridge No. 370180) was built in 1961 and had a minimum structural sufficiency rating of 80 in 2009. This bridge does not meet current design standards and will need to be replaced in the near future.

ALTERNATIVES

Two alternatives are being studied, namely the Build and No Build alternatives. The primary elements of the Build Alternative, which consists of reconstructing the existing three-quadrant cloverleaf interchange to a Type L-9 partial cloverleaf interchange, include:

- Reconstruction of the existing De La Cruz Boulevard Bridge Overcrossing (OC) from a four-lane to eight-lane facility, which includes exist lanes to the northbound and southbound loop on-ramps. Reconstruction would use pre-cast California super-girders to reduce structure depth, to provide standard vertical clearance over U.S. 101 and to allow for construction under the air space restriction of the adjacent Mineta San Jose International Airport.
- Modification of the existing De La Cruz Boulevard to provide an additional through lane in each direction from Trimble Road to Central Expressway.
- Reconstruction of the U.S. 101 northbound on-ramp from De La Cruz Boulevard to provide improved bicycle lane and pedestrian crossing safety.
- Modification of the northbound loop on-ramp from De La Cruz Boulevard to accommodate the OC bridge widening.

- Modification of the southbound loop on-ramp from De La Cruz Boulevard to accommodate the OC bridge widening, and to provide a right-angle intersection for improved bicycle lane and pedestrian crossing safety.
- Construction of a new intersection at the terminus of the U.S. 101 southbound off-ramp at De La Cruz Boulevard.
- Reconstruction of the southbound on-ramp from De La Cruz Boulevard to provide improved bicycle lane safety.
- Provision of an additional lane to the northbound U.S. 101 diagonal and loop on-ramps, and also to the southbound U.S. 101 loop on-ramp. The southbound off-ramp will terminate at De La Cruz Boulevard with four lanes at the ramp intersection.
- Provision of a pedestrian sidewalk on the north side of De La Cruz Boulevard between Trimble Road and Central Expressway.
- Provision of Class II bicycle lane striping in both directions on De La Cruz Boulevard between Trimble Road and Central Expressway.
- Provision of reconstructed ramp metering systems and high occupancy vehicle (HOV) bypass lanes at each on-ramp.
- Reconstruction of the intersection of De La Cruz Boulevard and Trimble Road to provide bike lanes and additional turn lanes.
- Reconstruction of the intersection of De La Cruz Boulevard and Central Expressway to provide bike lanes, and additional through and turn lanes. Provision of lane transition as needed on Central Expressway.
- Provision of low height roadway and ramp safety lighting and signing in compliance with Federal Aviation Administration (FAA) glide slope clearance requirements.
- Provision of island and fence for a portion of the Mineta San Jose International Airport instrument landing system (ILS) light system that crosses De La Cruz Boulevard.
- Modification of existing drainage systems to accommodate the interchange improvements and implement storm water quality best management practices (BMPs).

The No-Build alternative was examined as a baseline for comparison between the Build alternative and not building the project. The No-Build alternative proposes no modifications to the current US 101/De La Cruz Boulevard/Trimble Road interchange other than routine maintenance and rehabilitation of the facility and any currently planned and programmed projects within the area. This alternative would result in continued deterioration of traffic conditions with the additional forecasted traffic demand in the future. This alternative does not meet the need and purpose of the proposed project. Rather, it provides a basis for the analysis and evaluation of the Build Alternative.

FUNDING

The estimated total cost for the environmental documentation and project report is $600,000. The total proposed budget for the project, including soft costs, construction and right-of-way acquisition, is approximately $39,769,000 in 2011 dollars. VTA will administer this project through PA/ED, PS&E, Right-of-Way and Construction, and Caltrans will provide resources for oversight. No federal funding sources have been identified for this project.

1.2 DESIGN CONSULTANT SERVICES

The Scope of Services is divided into three Agreement tasks, numbered 1 through 3, which are summarized below.

TASK 1. Project Management
TASK 2. Investigations/GAD
TASK 3. Environmental Document/ PR

The PSR/PR & ED process will be completed, including preparation and completion of necessary engineering and environmental studies, Combined Project Study Report/Project Report, and Environmental Document in compliance with the current editions of the Caltrans Project Development Procedures Manual and the Caltrans Environmental Handbook.

2.0 ORGANIZATION

The R&M Design Team is an assembly of consultant firms and individuals with well defined work responsibilities. Each member of the team is responsible for the quality of their work consistent with the procedures and goals defined in this QA/QCP. The Project Manager and Deputy Project Manager are responsible to implement the QA/QCP, with the support of the QA/QC Manager, the design discipline leaders, and the entire design staff.

The following **Team Member Responsibilities s**ummarize the responsibilities of the prime consultant and subconsultants. Each subconsultant is professionally responsible for its own final products, including completeness, conformance to standards and criteria, and the accuracy of its findings, conclusions, and recommendations, and conformance to the QA/QCP.

Rajappan & Meyer Consulting Engineers

- Prime Consultant
- Overall Project Management
- Roadway Geometry and Layout
- Interchange Operations Analysis
- Drainage and Stormwater Planning and Design
- Structure and Retaining Wall Design
- Stage Construction Planning and Design
- Agency Coordination
- Design Exception Documentation
- PR Preparation
- Traffic Operations Analysis
- Safety Analysis
- Traffic Impact Reports

LSA Associates

- Environment Clearance Management
- Air, Noise, Cultural and Biologic Studies

- Land Use, Cumulative Effects Studies
- Environmental Justice, Cultural Studies
- Environmental Document Preparation
- Environmental Permits

HMH Engineers

- Surveys and Topographic Mapping
- Right of Way Surveys

Bender Rosenthal & Associates

- Right of Way Estimates

Parikh Consultants

- Geotechnical Investigations
- Pavement Design
- Foundations and Abutment Recommendations
- Geotechnical Report
- Hazardous Materials ISA

AEC Engineers

- Electrical Engineering
- Traffic Signal and Ramp Metering Design
- Lighting Design
- Utility Coordination and Relocation Management

Transmittal of all deliverables by subconsultants to the Project Manager will contain copies of QC Review Documents confirming that the work products have been properly checked and reviewed by the Subconsultant according to the approved quality control plan.

Personnel assigned to the US-101 – De La Cruz Project will be technically qualified for their task on the basis of appropriate education, training and experience, and will be familiar with the Project QA/QCP manual.

3.0 DOCUMENT CONTROL

Correspondence and documentation for the US-101 De La Cruz Project will occur to and from numerable sources including VTA, City of San Jose, Caltrans, utility agencies, private entities, and regulatory agencies. Documentation will take the form of letters, telephone memorandums, faxes, e-mails, reports, drawings, meeting notices and minutes, and various other documents.

Accordingly, effective QA/QCP is only possible with an effective system of document control where documents, both incoming and outgoing, can readily be identified, logged, filed and/or traced, as necessary. This will involve the following a file system for identifying documents by subject matter.

All incoming and outgoing documents are logged into a document control system. The term "document" includes all correspondence; letters, transmittals, faxes, etc. The document control system functions as follows.

3.1 INCOMING DOCUMENTS:

1. All incoming documents are received by the Administrative Assistant and date stamped in.

2. The documents are then routed to the Project Manager or his designee.
   - A subject file number and distribution is noted on the original document.
   - Each document is assessed as to whether action is required and this information is noted on the log sheet.
   - If the document is in response to an outgoing document, the incoming document is cross-referenced in the outgoing logbook.

3. The document is returned to the Administrative Assistant to prepare copies and distribute the document.
   - The Original is filed in the subject file (except invoices).
   - A copy is placed in the incoming chronological file.
   - A copy is given to the Project Manager and any others listed on the distribution list.

4. The Project Manager reads the document and takes action (or delegates the action), as required.

3.2 OUTGOING DOCUMENTS

1. The originator of an outgoing document conducts the following activities:
   - The subject file number and distribution is noted on the document.
   - Action required to the document is noted on the log sheet.
   - If the document is in response to an incoming document, the outgoing document is cross-referenced to the incoming document.

2. The Administrative Assistant prepares the file and distribution copies.
   - The original is sent to the addressee.
   - A copy of the document is placed in the subject file and the outgoing chronological file.

4.0 QUALITY CONTROL PROCEDURES

4.1 GENERAL

The purpose of the QC process is to ensure that:

- The designs conform to accepted design criteria and standards for the area.

- The designs satisfy performance requirements.
- The designs conform to regulatory standards for public safety and service.
- The proposed facilities are economically constructible.
- All discipline interfaces identified and effectively coordinated.

All work must conform to the accepted design standards of VTA, City of San Jose, Caltrans and other affected outside agencies. Hence, the QC procedures consists of internal R&M team activities, as well as VTA reviews and reviews by outside agencies such as Caltrans, for regulatory approvals, and by utility companies whose facilities may be impacted by the proposed rail facility.

This QA/QCP addresses the procedures for both **Internal QC Reviews** (R&M team review with VTA staff participation), and **External QC Reviews** (VTA staff and all outside agency reviews). The ground rules and procedures are different for Internal and External QC Reviews.

The Project Manager may call upon a selected member or team of senior individuals from the Prime Consultant to conduct **Independent Peer Reviews** of selected technical issues, management and administration procedures, including, but not limited to, the QA/QCP and the Interface Control Procedure. Subconsultant team members will participate as necessary to support the process.

Quality Records will be maintained on all reviews to demonstrate evidence of quality assurance and control. In addition, each design submittal package document it evolution with a write-up discussing the major design changes from the previous submittal and contain prior review comments and disposition and interface control review sheets.

4.2 DEFINITIONS

Quality Assurance (QA) is all those planned and systematic actions necessary to provide adequate confidence to the management that a product or services will satisfy given requirements for quality.
Quality Control (QC) is the operational techniques and activities that are used to fulfill requirements for quality. Quality Control involves monitoring a process and eliminating causes of unsatisfactory performance at all stages of the quality loop in order to result in economic effectiveness.

Quality Control Reviewer (QCR) is a senior staff member, generally familiar with Caltrans and transportation design requirements, but not involved on a day to day basis. The reviewer will change depending on the discipline required. Reviews may be done by the Chief Engineer or Project Manager at any time.

Quality Control Manager (QCM) is a designated senior staff member, independent of the design team, who will review project submittal quality control activities.

Engineering Review involves looking at the design and its execution. This includes constructability and proper coordination interface with the requirements of other elements and

sound engineering practice. This review checks for consistency between the plans, specifications and bid sheets.

Detail Review involves looking at every element of a drawing for completeness, correctness, consistency with design criteria and specifications, and compliance with drawing standards and symbology requirements.

4.3 STANDARDS

The plans, specifications and estimates shall be prepared in accordance with Caltrans' regulations, policies, procedures, manuals and standards. Items A through I are not all-inclusive, but are intended only to illustrate types of sources.

A. Roadway design shall be in accordance with the current edition of the Caltrans Environmental Handbook, Caltrans Project Development Procedures Manual, Highway Design Manual, the Standards for Plans, and Standard Specification

B. Basic design shall be in accordance with the Project Study Report and Environmental Document under preparation.

C. Roadway plans shall be prepared in conformance with the current editions of the Caltrans Drafting and Plans Manual and the Caltrans CADD Users Manual.

D. Plans, specifications and estimates shall be prepared in conformance with the current editions of the Caltrans Plans, Specifications and Estimates Guide.

E. All field and laboratory testing for geotechnical investigations shall be performed and the Materials Report shall be prepared in conformance with current editions of the Guidelines for Geotechnical Design Reports.

F. Bridge plans, specifications, and calculations shall be in accordance with the Caltrans Division of Structures (DOS) Bridge Design Details Manual, Bridge Design Aids Manual, Bridge Memos to Designers, Bridge Design Specifications, Caltrans Seismic Design Criteria, and Seismic Design Criteria for California Bridges.

G. All surveys shall conform to the current Caltrans Surveys Manual.

H. All phases of design of improvements which impact existing or proposed underground utilities shall conform to Caltrans Policy on High and Low Risk Underground Facilities within Highway Rights of Way.

I. All right-of-way maps shall conform to the current Caltrans Right-of-Way Manual. Design of the Project shall be performed in accordance with Caltrans standards and practices. Any exceptions to applicable design standards shall be approved by Caltrans via the process outlined in Caltrans Highway Design Manual and applicable memorandums and design bulletins published by Caltrans.

4.4 QC REVIEW PROCEDURES

4.4.1 Internal QC Review Procedure

All project deliverables shall receive a QC Review prior to issuance. The last QC Review document set reviewed prior to each milestone submittal shall be retained as evidence of the QC activity.

The review process in general:

- Specifications, final calculations, technical memoranda, costs estimates and computer reports receive an **ENGINEERING REVIEW**. Drawings receive both an **ENGINEERING REVIEW** AND a **DETAIL REVIEW**.
- Drawings and specifications receiving a QC review shall be stamped with the QC stamp (the stamp is depicted on page D1). Each drawing and the first page of each specification section shall be stamped and the stamp information completed.
- After the review process (corrections/changes are made and the QC review stamp filled with initials and dates) the review set is submitted to the R&M QA/QC Manager.

QC REVIEW STAMP

Team Member Name (as appropriate)		**TYPE OF REVIEW** **DETAIL** **ENGINEERING**
SUBMITTAL LEVEL _____%		
REVIEWER:_____	**FIRM:_____**	**DATE:_____**
RESPONDER:_____	**FIRM:_____**	**DATE:_____**

A. ENGINEERING REVIEW

The objectives of the **engineering review** are:

- Review that concepts or discussion depicted agree with design criteria.
- Review inconsistencies on documents, i.e., plans, specifications and bid sheets.
- Review that the level of completeness is appropriate.

- Review that appropriate methods and materials are being described.
- Review that the documents are being prepared in conformance with accepted standards.
- Review that systems, civil, structural, architectural and landscaping interfaces are identified correctly and addressed by the submittal, as needed.

B. DETAIL REVIEW

The objectives of the **detail review** are:

- Confirm that all information depicted or described is consistent with other aspects of the documents being reviewed.
- Confirm that the format of the documents is consistent with the project standards.
- Confirm that all standards referenced are the current version.
- Confirm that cross-references between documents are correct.
- Confirm that the documents are ready to be issued for bid and/or request for proposals.

C. REVIEW OF DELIVERABLES

The review procedure is as follows:

- The Responsible Designer(s), who report to the Task Leader for each design discipline, are responsible for the preparation of all design documents.
- The **Task Leader** from each design discipline assembles a copy of the documents to be reviewed, stamping each drawing and each specification section with the QC Review stamp.
- The QC set is given to the **QC Reviewer** for review.
- The QC **Reviewer** performs the required review (detail and/or engineering):

  Engineering Review: The **Reviewer** conducts the review by red marking those items to be changed or corrected or which need further consideration or explanation. The **Reviewer** is not expected to develop solutions but to identify items for the designer to address.

  Detail Review: The QC **Reviewer** proceeds by yellow lining every item on the QC set of drawings which is correct, red marking every item which is to be changed or corrected and green marking every item that needs to be deleted. Red is also used to make comments. Other appropriate annotation methods and color schemes can be used if approved by the **Task Leader**.

- The QC **Reviewer** completes their review by signing and dating the review stamp and returning the documents to the **Task Leader**.
- The **Responsible Designer** incorporates comments, makes corrections and resolves questions and back marks the set indicating the changes have been made. If required, the **Task Leader** will assess the mark-ups and adjudicate any differences between the **Reviewer** and the **Responsible Designer**.

- The **Responsible Designer** acknowledges receipt of reviewed documents and completion of comment incorporation by signing and dating the "responder" lines of the QC Review Stamp. Technical specification sections also shall be sign and dated by the **QC Reviewer**.

5.4.2 External QC Review Procedure

Reviews by outside agencies will by and large, be conducted on Milestone Submittals to check for conformance to other's design criteria, or for major impacts to other's facilities. The form shown in Appendix E is specifically tailored to record these reviews and to document the official response and design action taken by R&M on behalf of the VTA.

The External QC Review Procedure shall include the following steps:

A. SUBMITTALS

The Project Manager will ascertain, prior to each milestone submittal, specifically the number, type and size of drawing packages and reports that will be required for External review.

B. REVIEW FORMS

Reviews for submittals shall be documented in writing on the standard review form provided in **Appendix D**. Comments must be self explanatory and should not be ambiguous as to the reviewer's intent.

Hand mark-ups of drawings and text material should be clearly understandable and readable. Hand markup comments on plans will be transferred to the form by the consultant.

C. RESPONSES TO REVIEW COMMENTS

All responses to review comments shall be placed on the review forms and should state clearly agreement or disagreement to the comment, whether or not modifications will be made, and as clearly as possible and as simply as possible, provide an indication of the nature of the intended change.

For all review comments by VTA staff and outside agencies, there will be a response review meeting to discuss the responses to comments. These comments must be taken to a state of closure where solutions and/or lingering disagreements are documented for the next phase of design work. The following submittal package will include the prior submittal package's review comments and resolutions.

D. RESOLUTION MEETING

It is the responsibility of the designer/report preparer to ensure that his/her designs or reports have adequately addressed any issues raised by outside agencies. The designer will set up a meeting with the reviewers as required to ensure that comments have been addressed adequately.

ATTACHMENT J:

Division of Engineering Services PSR-PDS Scoping Checklist

ARTICLE 11

Division of Engineering Services
PSR-PDS Scoping Checklist

Project Information

District 04County SCLRoute 101 (Post Mile) 40.0/41.5EA 26470K Project ID#

Project Description**:** Route 101/De La Cruz Blvd/Trimble Road Interchange Improvements

Project Manager Dina El-Tawansy	Phone # (510) 290-7279	
DES Project Liaison Engineer* (PLE):	**Select a PLE from pulldown**	
DES Special Funded Projects Liaison Engineer:	David Soon	Phone # 916-227-5671
DES Consultant Management Engineer:	TBD	Phone #

*The Project Liaison Engineer will provide assistance with the completion of this form.

Project Scope

DES acknowledges that scope is in development at this time. The Project Liaison Engineer is available to assist the District in determining the involvement of DES functional units. The intent of the checklist is to gather as much information as possible on the alternatives to accurately identify the involvement of DES.

Describe and identify in the following sections a general description of improvements anticipated as part of the project scope that will require DES functional unit involvement.

Check applicable boxes describing proposed scope of project.

☐ New Expressway/Freeway on new alignment	☐ Other Roadway Realignment	☐ Widen Highway
	☐ Emergency/Storm Damage	☐ Rockfall Project
☐ Construct Interchange	☐ Bridge Widening	☐ Left-turn Pocket
☒ Modify Interchange	☐ Curve Correction	☐ Modify Slope
☒ Bridge Replacement (New alignment? ☐ Yes ☒ No)	☐ Building Project	☐ Stabilize Subgrade
	☐ Median Barrier Retrofit	☐ Stabilize Roadway
☐ Bridge Rehabilitation	☐ Construct Passing Lane	☐ Landslide/Slip-out
☐ New Bridge	☐ Soundwall/Retaining Wall	☐ Bridge Deck Rehab.
☐ Bridge Seismic Retrofit	☐ Roadway Rehabilitation	☐ Bridge Joint Seals
☐ Other Design: Explain:		

Briefly describe proposed scope of DES involvement for all alternatives.

Alternative 1: Reconstruct the existing De La Cruz Blvd Overcrossing from a 4-lane to 8-lane facility. The new bridge will provide standard vertical clerance over US101 and will allow for construction under the air space restriction of the adjacent SJC airport. Modify southbound ramps to a Type L-9 configuration. Add bike lanes and sidewalk. All design work will be done by consultant to VTA. CT oversight is required.

Alternative 2:

Alternative 3:

Project Schedule

PA/ED Date	December 2012

Project Cost

For PSR (PDS) projects, the following section is to be used for EACH alternative, provided that the scope is significantly different.

Alternative # 1

Project Cost Range ($ 1000's)		**Cost of Largest Structure ($ 1000's)**
Roadway	$16,697	$6,565
Structure**	$ 6,565	
Total	$23,262	

**Structure Cost Range to be provided by (check one)

☒ Consultant ☐ Structure Design Technical Liaison.

Project Scope Breakdown by DES Function

Photogrammetry

Note: A Photogrammetry Service Request-PSR (PDS) must be completed and submitted to DES Photogrammetry by the District Photogrammetry Coordinator.

Bridge Design Services (check applicable boxes)

Design by: Consultant

- ☐ Office of Structure Design
- ☐ Structure Maintenance Design
- ☐ Office of Structure Contract Management (Consultant Design Oversight)
- ☐ Office of Special Funded Projects (Consultant Design Oversight)

Bridge Information:

☐ New Bridge(s)	Number	Br. Name(s) & No(s).
☒ Bridge Replacement(s)	Number 1	Br. Name(s) & No(s).De La Cruz Blvd OC 37-0180
☐ Bridge Widening(s)	Number	Br. Name(s) & No(s).
☐ New Bridge over water	Number	Br. Name(s) & No(s).
☐Bridge Replacement over water	Number	Br. Name(s) & No(s).
☐Bridge Widening over water	Number	Br. Name(s) & No(s).
☐ Bridge Rail Replacement(s)	Number	Br. Name(s) & No(s).
☐Approach Slab	Number	Br. Name(s) & No(s).
☐Bridge with Railroad Involved	Number	Br. Name(s) & No(s).
☐Bridge w/ Scour Analysis	Number	Br. Name(s) & No(s).
☐Bridge w/ Special Design or Retrofit	Number	Br. Name(s) & No(s).

Other DES functional units required for Structure Work

☐ Structure Hydraulics (include if bridge is over or adjacent to water)
☒ Preliminary Investigations (Structure Foundation Plan)
☒ Geotechnical Services (Structure Foundations)

Wall Design Data for Structure Design & Geotechnical Services

☐ Soundwall(s) Number	Est. Max. Ht Est. Length	☐ Standard Design	☐ Special Design
☐ Ret. walls(s) Number	Est. Max. Ht Est. Length	☐ Standard Design	☐ Special Design
☐ MSE Wall(s) Number	Est. Max. Ht Est. Length	☐ Standard Design	☐ Special Design

Geotechnical Services

Is Oversight for consultant prepared geotechnical reports required?

☒ Yes ☐ No

Has the Geotechnical Design Liaison or other geotechnical person been contacted?

☐ Yes ☒ No If yes, who?

Terrain	☒ Flat	☐ Rolling	☐ Mountainous	
Cuts:	Est. Max Height (m) 3.0	Est. Volume (m^3): 60,000	☒ New	☐ Widen
Fills:	Est. Max Height (m) 6.2	Est. Volume (m^3): 80,300	☒ New	☐ Widen

Sign Structures

☒ Overhead Sign Foundations	Number 1
☐ Changeable Message Sign Foundations	Number

Other:

☐ Special Studies (slope stability, rockfall, erosion, seepage, ground water, settlement, liquefaction, slipout repair, rock slope, etc.) Explain
☐ Existing Maintenance Problems: Explain:

Technical Specialist Design

Anticipated insertable plan sheet(s) check below:

☒ Culvert(s)	Number 2

☒ Barrier(s)	Number 22
☐ Signs and Overhead Structures	Number
☐ Other Design:	Explain:

Transportation Architecture Design

☐ Design New Building(s)	Explain:
☐ Remodel Existing Buildings(s)	Explain:
☐ Bridge Aesthetics Evaluation	Explain:
☐ Build scale model	Explain:
☐ Other Aesthetics work	Explain:

Electrical, Mechanical, Water & Wastewater Design

☐ Pumping Plants	Explain:
☐ Movable bridge, drawbridge	Explain:
☐ Lighting control system for facilities	Explain:
☐ Sanitary Systems	Explain:

Materials Engineering & Testing Services

Pavement

☐ Rigid ☒ Flexible	Average Grade 2%	Average Superelevation 7%
☐ Deflection Study Required	No. of Locations	Lane/miles to be tested

Consultation and Inspection

☒ Loop detectors	☒ Signal & Lighting Products	☒ Changeable Message Signs, Closed Circuit TV
☒ Concrete Bridge	☐ Steel Bridge	

Materials Engineering & Testing Services (Continued)

Corrosion Tests

☒ Soil	☐ Concrete	☐ Cathodic Protection System

Other

☐ Special Products:	Explain

Additional Studies, Investigations or Research from DES

Identify additional studies or investigations that may be required from DES Functional Units. None

Prepared By: William Devabalan **Date 09/06/12**

Please submit this form to DES, to the attention of the Project Liaison Engineer, Office of Project Delivery, in the subdivision of Program/Project & Resource Management.

DES will provide a Structure Cost Estimate Range, for each alternative and a resource summary estimate to be included in the project workplan.

ATTACHMENT K:

Design Scoping Index (Cooperative Agreement)

COOPERATIVE AGREEMENT

This agreement, effective on June 16, 2009, is between the State of California, acting through its Department of Transportation, referred to as CALTRANS, and:

Santa Clara Valley Transportation Authority, a public entity referred to as VTA.

RECITALS

1. CALTRANS and VTA, collectively referred to as PARTNERS, are authorized to enter into a cooperative agreement for improvements within the SHS right of way per Streets and Highways Code sections 114 and/or 130.

2. WORK completed under this agreement contributes toward the improvement of Route 101/De La Cruz Boulevard interchange in the County of Santa Clara, referred to as PROJECT.

3. PARTNERS will cooperate to perform PA&ED only for PROJECT.

4. There are no prior PROJECT-related cooperative agreements.

5. No PROJECT deliverables have been completed prior to this agreement.

6. The estimated date for COMPLETION OF WORK is July 1, 2010.

7. PARTNERS now define in this agreement the terms and conditions under which they will accomplish WORK.

DEFINITIONS

CALTRANS STANDARDS – CALTRANS policies and procedures, including, but not limited to, the guidance provided in the *Guide to Project Delivery Workplan Standards* (previously known as WBS Guide) available at http://dot.ca.gov.

CEQA – The California Environmental Quality Act (California Public Resources Code, sections 21000 et seq.) that requires State and local agencies to identify the significant environmental impacts of their actions and to avoid or mitigate those significant impacts, if feasible.

COMPLETION OF WORK – All PARTNERS have met all scope, cost, and schedule commitments included in this agreement and have signed a COOPERATIVE AGREEMENT CLOSURE STATEMENT.

COOPERATIVE AGREEMENT CLOSURE STATEMENT – A document signed by PARTNERS that verifies the completion of all scope, cost, and schedule commitments included in this agreement.

FHWA – Federal Highway Administration.

FHWA STANDARDS – FHWA regulations, policies and procedures, including, but not limited to, the guidance provided at http://www.fhwa.dot.gov/programs.html.

FUNDING PARTNER – A partner who commits a defined dollar amount to WORK.

FUNDING SUMMARY - The table in which PARTNERS designate funding sources, types of funds, and the project components in which the funds are to be spent. Funds listed on the FUNDING SUMMARY are "not-to-exceed" amounts for each FUNDING PARTNER.

HM-1 – Hazardous material (including, but not limited to, hazardous waste) that may require removal and disposal pursuant to federal or state law whether it is disturbed by PROJECT or not.

HM-2 – Hazardous material (including, but not limited to, hazardous waste) that may require removal and disposal pursuant to federal or state law only if disturbed by PROJECT.

HM MANAGEMENT ACTIVITIES – Management activities related to either HM-1 or HM-2 including, without limitation, any necessary manifest requirements and disposal facility designations.

IMPLEMENTING AGENCY – The PARTNER responsible for managing the scope, cost, and schedule of a project component to ensure the completion of that component.

IQA – Independent Quality Assurance – Ensuring that IMPLEMENTING AGENCY'S quality assurance activities result in WORK being developed in accordance with the applicable standards and within an established Quality Management Plan. IQA does not include any work necessary to actually develop or deliver WORK or any validation by verifying or rechecking work performed by another PARTNER.

PA&ED (Project Approval and Environmental Document) – The project component that includes the activities required to deliver the project approval and environmental documentation for PROJECT.

PARTNERS – The term that collectively references all of the signatory agencies to this agreement. This term only describes the relationship between these agencies to work together to achieve a mutually beneficial goal. It is not used in the traditional legal sense in which one partner's individual actions legally bind the other partners.

PROJECT MANAGEMENT PLAN – A group of documents used to guide a project's execution and control throughout the project's lifecycle.

SCOPE SUMMARY – The table in which PARTNERS designate their commitment to specific scope activities within each project component as outlined by the *Guide to Project Delivery Workplan Standards* (previously known as WBS Guide) available at http://dot.ca.gov.

SHS – State Highway System.

SPONSOR(S) – The PARTNER that accepts the obligation to secure financial resources to fully fund WORK. This includes any additional funds beyond those committed in this agreement necessary to complete the full scope of WORK defined in this agreement or settle claims.

STATE-FURNISHED MATERIAL – Any materials or equipment supplied by CALTRANS.

WORK – All scope and cost commitments included in this agreement.

RESPONSIBILITIES

8. VTA is SPONSOR for all WORK.

9. VTA is the only FUNDING PARTNER for this agreement. VTA's funding commitment is defined in the FUNDING SUMMARY.

10. VTA is IMPLEMENTING AGENCY for PA&ED.

SCOPE

Scope: General

11. All WORK will be performed in accordance with federal and California laws, regulations, and standards.

    All WORK will be performed in accordance with FHWA STANDARDS and CALTRANS STANDARDS.

12. IMPLEMENTING AGENCY for a project component will provide a Quality Management Plan for that component as part of the PROJECT MANAGEMENT PLAN.

13. CALTRANS will provide IQA for the portions of WORK within existing and proposed SHS right of way. CALTRANS retains the right to reject noncompliant WORK, protect public safety, preserve property rights, and ensure that all WORK is in the best interest of the SHS.

14. VTA may provide IQA for the portions of WORK outside existing and proposed SHS right of way.

15. PARTNERS may, at their own expense, have a representative observe any scope, cost, or schedule commitments performed by another PARTNER. Observation does not constitute authority over those commitments.

16. Each PARTNER will ensure that all of their personnel participating in WORK are appropriately qualified to perform the tasks assigned to them.

17. PARTNERS will invite each other to participate in the selection and retention of any consultants who participate in WORK.

18. PARTNERS will conform to sections 1720 – 1815 of the California Labor Code and all applicable regulations and coverage determinations issued by the Director of Industrial Relations if PROJECT work is done under contract (not completed by a PARTNER'S own employees) and is governed by the Labor Code's definition of a "public work" (section 1720(a)(1)).

    PARTNERS will include wage requirements in all contracts for "public work" and will require their contractors and consultants to include prevailing wage requirements in all agreement-funded subcontracts for "public work".

19. IMPLEMENTING AGENCY for each project component included in this agreement will be available to help resolve WORK-related problems generated by that component for the entire duration of PROJECT.

20. CALTRANS will issue, upon proper application, at no cost, the encroachment permits required for WORK within SHS right of way.

    Contractors and/or agents, and utility owners will not perform activities within SHS right of way without an encroachment permit issued in their name.

21. If unanticipated cultural, archaeological, paleontological, or other protected resources are discovered during WORK, all work in that area will stop until a qualified professional can evaluate the nature and significance of the discovery and a plan is approved for its removal or protection.

22. All administrative draft and administrative final reports, studies, materials, and documentation relied upon, produced, created, or utilized for PROJECT will be held in confidence, and where applicable, Government Code section 6254.5(e) shall protect the

confidentiality of such documents in the event said documents are shared between the PARTNERS.

PARTNERS will not distribute, release, or share said documents with anyone other than employees, agents, and consultants who require access to complete WORK without the written consent of the PARTNER authorized to release them, unless required or authorized to do so by law.

23. If any PARTNER receives a public records request, pertaining to WORK under this agreement, that PARTNER will notify PARTNERS within five (5) working days of receipt and make PARTNERS aware of any transferred public documents.

24. If HM-1 or HM-2 is found during WORK, IMPLEMENTING AGENCY for the project component during which it is found will immediately notify PARTNERS.

25. CALTRANS, independent of PROJECT, is responsible for any HM-1 found within existing SHS right of way. CALTRANS will undertake HM-1 MANAGEMENT ACTIVITIES with minimum impact to PROJECT schedule.

26. VTA, independent of PROJECT, is responsible for any HM-1 found outside existing SHS right of way. VTA will undertake HM-1 MANAGEMENT ACTIVITIES with minimum impacts to PROJECT schedule.

27. If HM-2 is found within PROJECT limits, the public agency responsible for the advertisement, award, and administration (AAA) of the PROJECT construction contract will be responsible for managing HM-2 MANAGEMENT ACTIVITIES.

28. CALTRANS' acquisition or acceptance of title to any property on which any HM-1 or HM-2 is found will proceed in accordance with CALTRANS' policy on such acquisition.

29. PARTNERS will comply with all of the commitments and conditions set forth in the environmental permits, approvals, and agreements as those commitments and conditions apply to each PARTNER'S responsibilities in this agreement.

30. IMPLEMENTING AGENCY for each project component will furnish PARTNERS with regular status reports during the implementation of WORK in that component.

31. Upon COMPLETION OF WORK, ownership and title to all materials and equipment constructed or installed as part of WORK within SHS right of way become the property of CALTRANS.

32. IMPLEMENTING AGENCY for a project component may accept, reject, compromise, settle, or litigate claims of any non-agreement parties hired to do WORK in that component.

33. PARTNERS will confer on any claim that may affect WORK or PARTNERS' liability or responsibility under this agreement in order to retain resolution possibilities for potential future claims. No PARTNER shall prejudice the rights of another PARTNER until after PARTNERS confer on claim.

34. PARTNERS will maintain and make available to each other all WORK-related documents, including financial data, during the term of this agreement and retain those records for four (4) years from the date of termination or COMPLETION OF WORK, or three (3) years after the final federal voucher, whichever is later.

35. PARTNERS have the right to audit each other in accordance with generally accepted governmental audit standards.

    CALTRANS, the State auditor, FHWA, and VTA will have access to all WORK-related records of each PARTNER for audit, examination, excerpt, or transaction.

    The examination of any records will take place in the offices and locations where said records are generated and/or stored and will be accomplished during reasonable hours of operation.

    The audited PARTNER will review the preliminary audit, findings, and recommendations, and provide written comments within 60 calendar days of receipt.

    Any audit dispute not resolved by PARTNERS is subject to dispute resolution. Any costs arising out of the dispute resolution process will be paid within 30 calendar days of the final audit or dispute resolution findings.

36. PARTNERS consent to service of process as permitted by law.

37. PARTNERS will not incur costs beyond the funding commitments in this agreement. If IMPLEMENTING AGENCY anticipates that funding for WORK will be insufficient to complete WORK, SPONSOR(S) will seek out additional funds and PARTNERS will amend this agreement.

38. If WORK stops for any reason, IMPLEMENTING AGENCY will place PROJECT right of way in a safe and operable condition acceptable to CALTRANS.

39. If WORK stops for any reason, PARTNERS are still obligated to implement all applicable commitments and conditions included in the PROJECT environmental documentation, permits, agreements, or approvals that are in effect at the time that WORK stops, as they apply to each partner's responsibilities in this agreement, in order to keep PROJECT in environmental compliance until WORK resumes.

40. Each PARTNER accepts responsibility to complete the activities identified on the SCOPE SUMMARY. Activities marked with "N/A" on the SCOPE SUMMARY are not included in the scope of this agreement.

Scope: Project Approval and Environmental Document (PA&ED)

41. CALTRANS is the CEQA lead agency. CALTRANS will determine the type of environmental documentation required and will cause that documentation to be prepared.

42. All PARTNERS involved in the preparation of CEQA environmental documentation will follow the CALTRANS STANDARDS that apply to the CEQA process including, but not limited to, the guidance provided in the Standard Environmental Reference available at www.dot.ca.gov/ser.

43. VTA will prepare the appropriate environmental documentation to meet CEQA requirements.

44. Any PARTNER preparing any portion of the CEQA environmental documentation, including any studies and reports, will submit that portion of the documentation to the CEQA lead agency for review, comment, and approval at appropriate stages of development prior to public availability.

45. VTA will prepare, publicize and circulate all CEQA-related public notices and will submit said notices to the CEQA lead agency for review, comment, and approval prior to publication and circulation.

46. The CEQA lead agency will attend all CEQA-related public meetings.

47. VTA will plan, schedule, prepare materials for, and host all CEQA-related public meetings and will submit all materials to the CEQA lead agency for review, comment, and approval at least 10 working days prior to the public meeting date.

48. If a PARTNER who is not the CEQA lead agency holds a public meeting about PROJECT, that PARTNER must clearly state their role in PROJECT and identify CALTRANS as the CEQA lead agency on all meeting publications. All meeting publications must also inform the attendees that public comments collected at the meetings are not part of the CEQA public review process.

    That PARTNER will submit all meeting advertisements, agendas, exhibits, handouts, and materials to CALTRANS for review, comment, and approval at least 10 working days prior to publication or use. If that PARTNER makes any changes to the materials, that PARTNER will allow CALTRANS to review, comment on, and approve those changes three (3) working days prior to the public meeting date.

The CEQA lead agency maintains final editorial control with respect to text or graphics that could lead to public confusion over CEQA-related roles and responsibilities.

49. The PARTNER preparing the environmental documentation, including the studies and reports, will ensure that qualified personnel remain available to help resolve environmental issues and perform any necessary work to ensure that PROJECT remains in environmental compliance.

COST

Cost: General

50. SPONSOR(S) will secure funds for all WORK including any additional funds beyond the FUNDING PARTNERS' existing commitments in this agreement. Any change to the funding commitments outlined in this agreement requires an amendment to this agreement.

51. The cost of any awards, judgments, or settlements generated by WORK is a WORK cost.

52. CALTRANS, independent of PROJECT, will pay all costs for HM MANAGEMENT ACTIVITIES related to HM-1 found within existing SHS right of way.

53. VTA, independent of PROJECT, will pay all costs for HM MANAGEMENT ACTIVITIES related to any HM-1 found outside of existing SHS right of way.

54. HM MANAGEMENT ACTIVITIES costs related to HM-2 are a PROJECT construction cost.

55. The cost of coordinating, obtaining, complying with, implementing, and if necessary renewing and amending resource agency permits, agreements, and/or approvals is a WORK cost.

56. The cost to comply with and implement the commitments set forth in the environmental documentation is WORK cost.

57. The cost to ensure that PROJECT remains in environmental compliance is a WORK cost.

58. The cost of any legal challenges to the CEQA environmental process or documentation is a WORK cost.

59. Independent of WORK costs, CALTRANS will fund the cost of its own IQA for WORK done within existing or proposed future SHS right of way.

60. Independent of WORK costs, VTA will fund the cost of its own IQA for WORK done outside existing or proposed future SHS right of way.

61. Fines, interest, or penalties levied against any PARTNER will be paid, independent of WORK costs, by the PARTNER whose actions or lack of action caused the levy. That PARTNER will indemnify and defend all other partners.

62. The cost to place PROJECT right of way in a safe and operable condition and meet all environmental commitments is a WORK cost.

63. Because IMPLEMENTING AGENCY is responsible for managing the scope, cost, and schedule of a project component, if there are insufficient funds available in this agreement to place the PROJECT right of way in a safe and operable condition, the appropriate IMPLEMENTING AGENCY accepts responsibility to fund these activities until such time as PARTNERS amend this agreement.

    That IMPLEMENTING AGENCY may request reimbursement for these costs during the amendment process.

64. If there are insufficient funds in this agreement to implement applicable commitments and conditions included in the PROJECT environmental documentation, permits, agreements, and/or approvals that are in effect at a time that WORK stops, the PARTNER implementing the commitments or conditions accepts responsibility to fund these activities until such time are PARTNERS amend this agreement.

    That PARTNER may request reimbursement for these costs during the amendment process.

65. FUNDING PARTNERS accept responsibility to provide the funds identified on the FUNDING SUMMARY.

66. SPONSOR(S) accepts responsibility to ensure full funding for the identified scope of work.

Cost: Project Approval and Environmental Document (PA&ED)

67. The cost to prepare, publicize and circulate all CEQA-related public notices is a WORK cost.

68. The cost to plan, schedule, prepare, materials for, and host all CEQA-related public hearings is a WORK cost.

69. FUNDING PARTNERS will share the cost of PA&ED as shown on the FUNDING SUMMARY.

SCHEDULE

70. PARTNERS will manage the schedule for WORK through the work plan included in the PROJECT MANAGEMENT PLAN.

GENERAL CONDITIONS

71. This agreement will be understood in accordance with and governed by the Constitution and laws of the State of California. This agreement s will be enforceable in the State of California. Any legal action arising from this agreement will be filed and maintained in the Superior Court of the county in which the CALTRANS district office signatory to this agreement resides, or in the Superior Court of the County in which WORK is being performed.

72. All obligations of CALTRANS under the terms of this agreement are subject to the appropriation of resources by the Legislature, the State Budget Act authority, and the allocation of funds by the California Transportation Commission.

73. Any partner who performs IQA does so for their own benefit. Other PARTNER or parties not signatory to this agreement cannot assign liability to that PARTNER by reason of their IQA activities.

74. Neither VTA nor any officer or employee thereof is responsible for any injury, damage or liability occurring by reason of anything done or omitted to be done by CALTRANS under or in connection with any work, authority, or jurisdiction conferred upon CALTRANS or arising under this agreement.

    It is understood and agreed that CALTRANS will fully defend, indemnify, and save harmless VTA and all of its officers and employees from all claims, suits, or actions of every name, kind, and description brought forth under, but not limited to, tortious, contractual, inverse condemnation, or other theories or assertions of liability occurring by reason of anything done or omitted to be done by CALTRANS under this agreement.

75. Neither CALTRANS nor any officer or employee thereof is responsible for any injury, damage, or liability occurring by reason of anything done or omitted to be done by VTA under or in connection with any work, authority, or jurisdiction conferred upon VTA or arising under this agreement.

    It is understood and agreed that VTA will fully defend, indemnify, and save harmless CALTRANS and all of its officers and employees from all claims, suits, or actions of every name, kind, and description brought forth under, but not limited to, tortious, contractual, inverse condemnation, or other theories or assertions of liability occurring by reason of anything done or omitted to be done by VTA under this agreement.

76. This agreement is not intended to create a third party beneficiary or define duties, obligations, or rights in parties not signatory to this agreement. This agreement is not intended to affect the legal liability of PARTNERS by imposing any standard of care for completing WORK different from the standards imposed by law.

77. PARTNERS will not assign or attempt to assign agreement obligations to parties not signatory to this agreement.

78. Any ambiguity contained in this agreement will not be interpreted against PARTNERS. PARTNERS waive the provisions of California Civil Code section 1654.

79. A waiver of a PARTNER'S performance under this agreement will not constitute a continuous waiver of any other provision. An amendment made to any article or section of this agreement does not constitute an amendment to or negate all other articles or sections of this agreement.

80. A delay or omission to exercise a right or power due to a default does not negate the use of that right or power in the future when deemed necessary.

81. If any PARTNER defaults in their agreement obligations, the non-defaulting PARTNER(S) will request in writing that the default be remedied within 30 calendar days. If the defaulting PARTNER fails to do so, the non-defaulting PARTNER(S) may initiate dispute resolution.

82. If a question arises regarding interpretation of the Agreement or its performance, or the alleged failure of a PARTNER to perform, the PARTNER raising the question or making the allegation shall give written notice thereof to the other PARTNER. The PARTNERS shall promptly meet in an effort to resolve the issues raised. If the PARTNERS fail to resolve the issues raised, alternative forms of dispute resolution, including mediation or binding arbitration, may be pursued by mutual agreement. It is the intent of the PARTNERS to the extent possible that litigation be avoided as a method of dispute resolution.

The prevailing partner in any civil action will be entitled to an award of all costs, fees, and expenses, including reasonable attorney fees as a result of litigating a dispute under this agreement or to enforce the provisions of this article including equitable relief.

83. PARTNERS maintain the ability to pursue alternative or additional dispute remedies if a previously selected remedy does not achieve resolution.

84. If any provisions in this agreement are found by a court of competent jurisdiction to be, or are in fact, illegal, inoperative, or unenforceable, those provisions do not render any or all other agreement provisions invalid, inoperative, or unenforceable, and those provisions will be automatically severed from this agreement.

85. This agreement is intended to be PARTNERS' final expression and supersedes all prior oral understanding or writings pertaining to WORK.

86. If during performance of WORK additional activities or environmental documentation is necessary to keep PROJECT in environmental compliance, PARTNERS will amend this agreement to include completion of those additional tasks.

87. PARTNERS will execute a formal written amendment if there are any changes to the commitments made in this agreement.

88. This agreement will terminate upon COMPLETION OF WORK or upon 30 calendar days' written notification to terminate and acceptance between PARTNERS, whichever occurs first.

    However, all indemnification, document retention, audit, claims, environmental commitment, legal challenge, and ownership articles will remain in effect until terminated or modified in writing by mutual agreement.

89. The following documents are attached to, and made an express part of this agreement: SCOPE SUMMARY, FUNDING SUMMARY.

90. Signatories may execute this agreement through individual signature pages provided that each signature is an original. This agreement is not fully executed until all original signatures are attached.

CONTACT INFORMATION

Below is the contact information for each PARTNER to this agreement. PARTNERS will notify each other in writing of any personnel or location changes. These changes do not require an amendment to this agreement.

The primary agreement contact person for CALTRANS is:
Dina El-Tawansy, Project Manager-South
111 Grand Ave.
Oakland, California 94612
Office Phone: (510) 286-7236
Email: dina_el-tawansy@dot.ca.gov

The primary agreement contact person for VTA is:
Scott Hensler, Project Manager
3331 North First Street, Building B-2
San Jose, California 95134
Office Phone: (408) 321-5706
Email: scott.hensler@vta.org

SIGNATURES

PARTNERS declare that:

1. Each PARTNER is an authorized legal entity under California state law.
2. Each PARTNER has the authority to enter into this agreement.
3. The people signing this agreement have the authority to do so on behalf of their public agencies.

STATE OF CALIFORNIA
DEPARTMENT OF TRANSPORTATION

By: _____
Helena (Lenka) Culik-Caro
Deputy District Director - Design

CERTIFIED AS TO FUNDS:

By: _____
Cynthia Stratton
District Budget Manager

SANTA CLARA VALLEY
TRANSPORTATION AGENCY

By: _____ 02/03/09
Michael T. Burns
General Manager

APPROVED AS TO FORM

By: _____ 2/2/09
VTA Counsel

SCOPE SUMMARY

4	5	6	7	8	Description	CALTRANS	VTA	N/A
2					**Project Approval and Environmental Document (PA&ED) - 160, 165, 175, 180, 205**	**X**	**X**	
	160				Perform Preliminary Engineering Studies and Draft Project Report		X	
	165				Perform Environmental Studies and Prepare Draft Environmental Document	X	X	
		05			Environmental Scoping of Alternatives Identified for Studies in Project Initiation Document		X	
		10			General Environmental Studies		X	
		15			Biological Studies		X	
		20			Cultural Resource Studies		X	
		25			Draft Environmental Document or Categorical Exemption/Exclusion	X	X	
			10		Section 4(F) Evaluation		X	
			20		Environmental Quality Control and Other Reviews	X		
			25		Approval to Circulate Resolution	X		
			30		Environmental Coordination		X	
			99		Other Draft Environmental Document Products		X	
		30			NEPA Delegation			X
		45			Required Permits During PA&ED Development			X
		50			Permits During PA&ED Development			X
	175				Circulate Draft Environmental Document and Select Preferred Project Alternative Identification	X	X	
		05			DED Circulation		X	
		10			Public Hearing		X	
		15			Public Comment Responses and Correspondence		X	
		20			Project Preferred Alternative		X	
		25			NEPA Delegation			X
	180				Prepare and Approve Project Report and Final Environmental Document	X	X	
		05			Final Project Report		X	
		10			Final Environmental Document	X	X	
			05		Approved Final Environmental Document	X		
			10		Public Distribution of Final Environmental Document and Respond To Comments		X	
			15		Final Right of Way Relocation Impact Document		X	
			99		Other Final Environmental Document Products		X	
		15			Completed Environmental Document	X	X	
			05		Record of Decision (NEPA)	X		
			10		Notice of Determination (CEQA)	X		
			20		Environmental Commitments Record	X		
		20			NEPA Delegation			X
	205				Obtain Permits, Agreements, and Route Adoptions		X	

FUNDING SUMMARY

Funding Source	Funding Partner	Fund Type	PA&ED	Subtotal Support	Subtotal Capital	Subtotal Funds Type
LOCAL	VTA	Local	$400,000.00	$400,000.00	$0.00	$400,000.00
		Subtotals by Component	$400,000.00	$400,000.00	$0.00	$400,000.00

11/2/10
2.9

ORIGINAL

SECOND AMENDMENT TO AMENDED AND RESTATED COOPERATIVE AGREEMENT BETWEEN THE CITY OF SAN JOSE AND THE SANTA CLARA VALLEY TRANSPORTATION AUTHORITY FOR THE ROUTE 101 DE LA CRUZ BOULEVARD/TRIMBLE ROAD INTERCHANGE RECONSTRUCTION PROJECT

This Second Amendment ("Second Amendment") is made and entered into this 2nd day of Nov, 2010, by and between the CITY OF SAN JOSE, a municipal corporation of the State of California (hereinafter "CITY") and the SANTA CLARA VALLEY TRANSPORTATION AUTHORITY, a public agency organized as a special district under California law (hereinafter "VTA"). Hereinafter, CITY and VTA may individually be referred to as "Party" or collectively be referred to as "Parties".

RECITALS

A. WHEREAS, on June 30, 2005, CITY and VTA entered into an agreement entitled "COOPERATIVE AGREEMENT BETWEEN THE CITY OF SAN JOSE AND THE SANTA CLARA VALLEY TRANSPORTATION AUTHORITY FOR THE ROUTE 101 DE LA CRUZ BOULEVARD/TRIMBLE ROAD INTERCHANGE RECONSTRUCTION PROJECT" (hereinafter, "ORIGINAL AGREEMENT"); and

B. WHEREAS, on April 24, 2007, CITY and VTA entered into an agreement entitled "AMENDED AND RESTATED COOPERATIVE AGREEMENT BETWEEN THE CITY OF SAN JOSE AND THE SANTA CLARA VALLEY TRANSPORTATION AUTHORITY FOR THE ROUTE 101 DE LA CRUZ BOULEVARD/TRIMBLE ROAD INTERCHANGE RECONSTRUCTION PROJECT" (hereinafter, "RESTATED AGREEMENT"); and

C. WHEREAS, by letter dated March 24, 2009, the Director of Transportation approved a six-month extension to the term of the RESTATED AGREEMENT, through October 24, 2009, as authorized under the RESTATED AGREEMENT;

D. WHEREAS, on October 20, 2009, CITY and VTA entered into a First Amendment to the RESTATED AGREEMENT to extend the term of the RESTATED AGREEMENT from October 24, 2009 to December 31, 2010;

E. WHEREAS, CITY and VTA desire to amend the RESTATED AGREEMENT to include funding for an Initial Study/Mitigated Negative Declaration (IS/MND) for the PROJECT, increase the financial contribution made by the CITY to fund the PROJECT from $700,000 to $850,000, revise the addressee for notice to the CITY and VTA, and extend the term of the RESTATED AGREEMENT through October 31, 2011;

NOW, THEREFORE, the Parties agree to amend the RESTATED AGREEMENT as follows:

SECTION 1. **Section 1**. **Scope of Project**. is amended in its entirety to read as follows:

"The PROJECT shall include all planning, preparation, and analysis activities necessary to develop and deliver a PSR/PR and ED (CEQA only) and an IS/MND for the IMPROVEMENT and shall consider:

a. Widening or replacing the existing overcrossing across Route 101.
b. Widening of De La Cruz Boulevard/Trimble Road to six travel lanes through the interchange limits.
c. Reconstruction of the southbound exit loop to a partial cloverleaf design and incorporation of a new intersection on De La Cruz Boulevard.
d. Widening of the off ramp from Route 101 to southbound Route 87 to provide a second exit lane.
e. Incorporate a bicycle and pedestrian friendly design within the limits of the project."

SECTION 2. **Section 2. CITY's Financial Contribution.** is amended in its entirety to read as follows:

"CITY shall contribute to the PROJECT an amount not to exceed **Eight Hundred Fifty Thousand Dollars ($850,000.00)** (hereinafter, "CITY's Contribution") as follows: CITY shall deposit $700,000.00 into VTA's designated interest-bearing account following execution of this Restated Agreement and following receipt of VTA's invoice. This deposit is necessary before the PROJECT can proceed. CITY shall also deposit $150,000.00 into VTA's designated interest-bearing account following execution of this Second Amendment to the Amended and Restated Agreement and following receipt of VTA's invoice. VTA shall use CITY's Contribution, including interest earned thereon, for the sole purpose of completing the PROJECT, as set forth in this Restated Agreement."

SECTION 3. **Section 4d. Expenditure Updates**. is amended in its entirety to read as follows:

"VTA shall provide CITY with quarterly progress updates showing expenditures for the PROJECT. VTA shall actively monitor, as part of the quarterly reports, actual PROJECT expenditures to ensure that CITY's Contribution will be sufficient to pay for planned PROJECT expenditures. If, at any time, planned PROJECT expenditures are projected to exceed $850,000.00, VTA shall immediately notify CITY of the change in the projected expenditures. The Parties shall then have the following options:

i. Revise the project scope in accordance with the available funds, which revision can be accomplished only by written amendment mutually agreed upon by the Parties and approved by the CITY's City Council;
ii. Revise the financial responsibilities of each Party, which revision can be accomplished only by written amendment mutually agreed upon by the Parties and approved by the CITY's City Council;
iii. Terminate this Restated Agreement, which can be accomplished by either Party giving written notice to the other party of such

termination consistent with Sections 9 and 15 below."

SECTION 4. **Section 4e. Deliverables.** is amended in its entirety to read as follows

"VTA shall complete or cause to be completed those items listed in REVISED EXHIBIT A, attached hereto and incorporated herein, no later than the time designated in REVISED EXHIBIT A."

SECTION 5. **Section 8. Term of Agreement.** is amended in its entirely to read as follows:

"This Restated Agreement shall become effective on the date specified on the first page hereof and shall remain in effect to the date of October 31, 2011 or until earlier termination. VTA shall use its best efforts to complete the PROJECT on or before October 31, 2011. The Director or the Director's designee is authorized to extend the term of this Restated Agreement for up to six (6) months after the expiration date, upon written notice to VTA and without formal amendment of this Restated Agreement."

SECTION 6. **Section 15. Notice**. is amended in its entirety to read as follows:

"To VTA: Santa Clara Valley Transportation Authority
John H. Ristow, Chief CMA Officer
CMA Division
3331 North First Street, Bldg. B-2
San Jose, CA 95134-1906

To CITY: City of San Jose
Hans F. Larsen, Acting Director
Department of Transportation
200 E. Santa Clara St., 8th Floor Tower
San Jose, CA 95113-1905

Notice shall be deemed effective on the date personally delivered or, if mailed, three (3) days after deposit in the United States mail."

SECTION 7. Exhibit A is hereby replaced in its entirety with the Revised Exhibit A attached hereto and incorporated herein.

SECTION 8. All of the terms and conditions of the RESTATED AGREEMENT and First Amendment not specifically modified by this Second Amendment shall remain in full force and effect.

WITNESS THE EXECUTION HEREOF on the day and year first written above.

"CITY"

APPROVED AS TO FORM

Johnny V. Phan
Deputy City Attorney

CITY OF SAN JOSE, a municipal corporation

By _____
Lee Price, MMC
City Clerk

Date: _____

"VTA"

APPROVED AS TO FORM

VTA Counsel

SANTA CLARA VALLEY TRANSPORTATION AUTHORITY, a public agency

By _____
Michael T. Burns
General Manager

T-5.001.220.001.002/698888

REVISED EXHIBIT A

DELIVERABLES AND MILESTONE SCHEDULE

Route 101/De La Cruz Blvd/Trimble Road Interchange Reconstruction Project

Project Deliverable	Time of Completion from Execution of Amendment #2
Purpose and Need Memorandum	3 Months
Geometric Alternatives	3 Months
Draft Combined Project Study Report/Project Report (PSR/PR)	9 Months
Traffic Studies/Traffic Operations Reports	5 Months
Environmental Document	11 Months
Final Combined PSR/PR	12 Months