Appendix 13. AIRPLANES ARRANGED BY AIRPLANE MANUFACTURER, AND AIRPORT REFERENCE CODE

Section 1. Alphabetical Listing (U.S. customary units)

Aircraft	Airport Reference Code	Appch Speed Knots		Wingspan Feet	Length Feet	Tail Height Feet	Maximum Takeoff Lbs
Aeritalia G-222	B-III	109		93.8	74.4	32.0	61,700
Aerocom Skyliner	A-II	88		54.0	54.3	16.5	12,500
Aerospatiale C 160 Trans.	C-IV	124		131.3	106.3	38.7	108,596
Aerospatiale NORD-262	B-II	96		71.9	63.3	20.4	23,480
Aerospatiale SE 210 Carav.	C-III	127		112.5	105.0	28.6	114,640
Aerospatiale SN 601 Corv.	B-I	118		42.2	45.4	13.9	14,550
Ahrens AR 404	B-II	98		66.0	52.7	19.0	18,500
AIDC/CAF XC-2	A-III	86		81.7	65.9	25.3	27,500
Airbus A-300-600	C-IV	135		147.1	177.5	54.7	363,763
Airbus A-300-B4	C-IV	132		147.1	175.5	55.5	330,700
Airbus A-310-300	C-IV	125		144.1	153.2	52.3	330,693
Airbus A-320-100	C-III	138		111.3	123.3	39.1	145,505
Air-Metal AM-C 111	B-II	96		63.0	55.2	21.0	18,629
AJI Hustler 400	B-I	98		28.0	34.8	9.8	6,000
Antonov AN-10	C-IV	126		124.8	121.4	32.2	121,500
Antonov AN-12	C-IV	127		124.8	109.0	34.6	121,500
Antonov AN-124	C-VI	124		232.0	223.0	66.2	800,000
Antonov AN-14	A-II	52		72.1	37.2	15.2	7,607
Antonov AN-22	C-V	140	*	211.0	167.0	41.2	500,000
Antonov AN-24	B-III	119		95.8	77.2	27.3	46,305
Antonov AN-26	C-III	121		95.8	78.1	28.1	52,920
Antonov AN-28	A-II	88		72.1	42.6	16.1	12,350
Antonov AN-30	B-III	112		96.4	80.1	27.3	51,040
Antonov AN-72	A-III	89	*	84.7	84.7	27.0	66,000
AW.650 Argosy 220	C-III	123		115.0	86.8	27.0	93,000
AW.660 Argosy C.Mk.1	B-III	113		115.0	89.1	27.0	97,000
BAC 111-200	C-III	129		88.5	93.5	24.5	79,000
BAC 111-300	C-III	128		88.5	93.5	24.5	88,500
BAC 111-400	C-III	137		88.5	93.5	24.5	87,000
BAC 111-475	C-III	135		93.5	93.5	24.5	98,500
BAC 111-500	D-III	144		93.5	107.0	24.5	104,500
BAC/Aerospatiale Concord	D-III	162		83.8	205.4	37.4	408,000
BAe 146-100	B-III	113		86.4	85.8	28.3	74,600
BAe 146-200	B-III	117		86.4	93.7	28.3	88,250
BAe 146-300	C-III	121		86.4	104.2	28.1	104,000
BAe Jetstream 31	B-II	99		52.0	47.2	17.5	14,550
Beech Airliner 1900-C	B-II	120	*	54.5	57.8	14.9	16,600
Beech Airliner C99	B-I	107		45.9	44.6	14.4	11,300
Beech Baron 58	B-I	96		37.8	29.8	9.8	5,500
Beech Baron 58P	B-I	101		37.8	29.8	9.1	6,200
Beech Baron 58TC	B-I	101		37.8	29.8	9.1	6,200
Beech Baron B55	A-I	90		37.8	28.0	9.1	5,100
Beech Baron E55	A-I	88		37.8	29.0	9.1	5,300
Beech Bonanza A36	A-I	72		33.5	27.5	8.6	3,650

Aircraft	Airport Reference Code	Appch Speed Knots		Wingspan Feet	Length Feet	Tail Height Feet	Maximum Takeoff Lbs
Beech Bonanza B36TC	A-I	75		37.8	27.5	8.6	3,850
Beech Bonanza F33A	A-I	70		33.5	26.7	8.2	3,400
Beech Bonanza V35B	A-I	70		33.5	26.4	6.6	3,400
Beech Duchess 76	A-I	76		38.0	29.0	9.5	3,900
Beech Duke B60	B-I	98		39.2	33.8	12.3	6,775
Beech E18S	A-II	87		49.7	35.2	9.5	9,300
Beech King Air B100	B-I	111		45.8	39.9	15.3	11,800
Beech King Air C90-1	B-II	100		50.2	35.5	14.2	9,650
Beech King Air F90	B-I	108		45.9	39.8	15.1	10,950
Beech Sierra 200-B24R	A-I	70		32.8	25.7	8.2	2,750
Beech Skipper 77	A-I	63		30.0	24.0	6.9	1,675
Beech Sundowner 180-C23	A-I	68		32.8	25.7	8.2	2,450
Beech Super King Air B200	B-II	103		54.5	43.8	15.0	12,500
BN-2A Mk.3 Trislander	A-II	65		53.0	45.7	14.2	10,000
Boeing 707-100	C-IV	139		130.8	145.1	41.7	257,340
Boeing 707-200	D-IV	145		130.8	145.1	41.7	257,340
Boeing 707-320	C-IV	139		142.4	152.9	42.2	312,000
Boeing 707-320B	C-IV	136		145.8	152.9	42.1	336,600
Boeing 707-420	C-IV	132		142.4	152.9	42.2	312,000
Boeing 720	C-IV	133		130.8	136.2	41.4	229,300
Boeing 720B	C-IV	137		130.8	136.8	41.2	234,300
Boeing 727-100	C-III	125		108.0	133.2	34.3	169,000
Boeing 727-200	C-III	138		108.0	153.2	34.9	209,500
Boeing 737-100	C-III	137		93.0	94.0	37.2	110,000
Boeing 737-200	C-III	137		93.0	100.2	37.3	115,500
Boeing 737-300	C-III	137		94.8	109.6	36.6	135,000
Boeing 737-400	C-III	139		94.8	119.6	36.6	150,000
Boeing 737-500	C-III	140	*	94.8	101.8	36.6	133,500
Boeing 747-100	D-V	152		195.7	231.8	64.3	600,000
Boeing 747-200	D-V	152		195.7	231.8	64.7	833,000
Boeing 747-300SR	D-V	141		195.7	231.8	64.3	600,000
Boeing 747-400	D-V	154		213.0	231.8	64.3	870,000
Boeing 747-SP	C-V	140		195.7	184.8	65.8	696,000
Boeing 757	C-IV	135		124.8	155.3	45.1	255,000
Boeing 767-200	C-IV	130		156.1	159.2	52.9	315,000
Boeing 767-300	C-IV	130		156.1	180.3	52.6	350,000
Boeing 777-200	D-V	145		199.9	209.1	61.5	632,500
Boeing 777-300	D-V	145		199.9	242.3	61.5	660,000
Boeing B-52	D-V	141	*	185.0	157.6	40.8	488,000
Boeing C97 Stratocruiser	B-IV	105		141.3	110.3	38.3	145,800
Boeing E-3	C-IV	137		145.9	153.0	42.0	325,000
Boeing E-4 (747-200)	D-V	152		195.7	231.8	64.7	833,000
Boeing YC-14	A-IV	89		129.0	131.7	48.3	216,000
Bristol Brittania 300/310	B-IV	117		142.3	124.2	37.5	185,000
Canadair CL-44	C-IV	123		142.3	136.8	38.4	210,000
Canadair CL-600	C-II	125		61.8	68.4	20.7	41,250
Casa C-207A Azor	B-III	102		91.2	68.4	25.4	36,400
Casa C-212-200 Aviocar	A-II	81		62.3	49.8	20.7	16,976
Cessna Citation I	B-I	108		47.1	43.5	14.3	11,850
Cessna Citation II	B-II	108		51.7	47.2	15.0	13,300
Cessna Citation III	B-II	114		53.5	55.5	16.8	22,000
Cessna-150	A-I	55		32.7	23.8	8.0	1,600

Aircraft	Airport Reference Code	Appch Speed Knots	Wingspan Feet	Length Feet	Tail Height Feet	Maximum Takeoff Lbs
Cessna-177 Cardinal	A-I	64	35.5	27.2	8.5	2,500
Cessna-402 Businessliner	B-I	95	39.8	36.1	11.6	6,300
Cessna-404 Titan	B-I	92	46.3	39.5	13.2	8,400
Cessna-414 Chancellor	B-I	94	44.1	36.4	11.5	6,785
Cessna-421 Golden Eagle	B-I	96	41.7	36.1	11.6	7,450
Cessna-441 Conquest	B-II	100	49.3	39.0	13.1	9,925
Convair 240	B-III	107	91.8	74.7	26.9	41,790
Convair 340	B-III	104	105.3	81.5	28.2	49,100
Convair 440	B-III	106	105.3	81.5	28.2	49,100
Convair 580	B-III	107	105.3	81.5	29.2	54,600
Dassault 1150 Atlantic	C-IV	130 *	122.7	104.2	37.2	100,000
Dassault 941	A-II	59	76.7	77.9	30.7	58,400
Dassault FAL-10	B-I	104	42.9	45.5	15.1	18,740
Dassault FAL-20	B-II	107	53.5	56.3	17.4	28,660
Dassault FAL-200	B-II	114	53.5	56.3	17.4	30,650
Dassault FAL-50	B-II	113	61.9	60.8	22.9	37,480
Dassault FAL-900	B-II	100	63.4	66.3	24.8	45,500
Dassault Mercure	B-III	117	100.2	114.3	37.3	124,500
DHC-2 Beaver	A-I	50	48.0	30.3	9.0	5,100
DHC-4 Caribou	A-III	77	95.6	72.6	31.8	28,500
DHC-5D Buffalo	B-III	91	96.0	79.0	28.7	49,200
DHC-6-300 Twin Otter	A-II	75	65.0	51.7	19.5	12,500
DHC-7 Dash 7-100	A-III	83	93.0	80.7	26.2	43,000
DHC-8 Dash 8-300	A-III	90	90.0	84.3	24.6	41,100
DH.104 Dove 8	A-II	84	57.0	39.2	13.3	8,950
DH.106 Comet 4C	B-III	108	115.0	118.0	29.5	162,000
DH.114 Heron 2	A-II	85	71.5	48.5	15.6	13,500
Dornier DO 28D-2	A-II	74	51.0	37.4	12.8	8,855
Dornier LTA	A-II	74 *	58.4	54.4	18.2	15,100
Embraer-110 Bandeirante	B-II	92	50.3	49.5	16.5	13,007
Embraer-121 Xingu	B-I	92	47.4	40.2	15.9	12,500
Embraer-326 Xavante	B-I	102	35.6	34.9	12.2	11,500
Embraer-820 Navajo Chief	A-I	74	40.7	34.6	13.0	7,000
Fairchild C-119	C-III	122	109.3	86.5	27.5	77,000
Fairchild C-121	A-III	88	110.0	75.8	34.1	60,000
Fairchild FH-227 B,D	B-III	105	95.2	83.1	27.5	45,500
Fairchild F-27 A,J	B-III	109	95.2	77.2	27.5	42,000
FMA IA-50 Guarni II	B-II	101	64.1	48.8	19.1	15,700
Fokker F-27-500	B-III	102	95.2	82.3	29.3	45,000
Fokker F-28-1000	B-II	119	77.3	89.9	27.8	65,000
Fokker F-28-2000	B-II	119	77.3	97.2	27.8	65,000
Fokker F-28-3000	C-III	121	82.3	89.9	27.8	73,000
Fokker F-28-4000	C-III	121	82.3	97.2	27.8	73,000
Fokker F-28-6000	B-III	113	82.3	97.2	27.8	73,000
Foxjet ST-600-8	B-I	97	31.6	31.8	10.2	4,550
GAC-100	A-II	86	70.0	67.3	24.9	28,900
Gates Learjet 24	C-I	128	35.6	43.3	12.6	13,000
Gates Learjet 25	C-I	137	35.6	47.6	12.6	15,000
Gates Learjet 28/29	B-I	120	43.7	47.6	12.3	15,000
Gates Learjet 35A/36A	D-I	143	39.5	48.7	12.3	18,300
Gates Learjet 54-55-56	C-I	128	43.7	55.1	14.7	21,500

Aircraft	Airport Reference Code	Appch Speed Knots	Wingspan Feet	Length Feet	Tail Height Feet	Maximum Takeoff Lbs
General Dynamics 880	D-IV	155	120.0	129.3	36.0	193,500
General Dynamics 990	D-IV	156	120.0	139.2	39.5	255,000
Grumman Gulfstream I	B-II	113	78.3	75.3	23.0	36,000
Grumman Gulfstream II	D-II	141	68.8	79.9	24.5	65,300
Grumman Gulfstream III	C-II	136	77.8	83.1	24.4	68,700
Grumman Gulfstream II-TT	D-II	142	71.7	79.9	24.5	65,300
Grumman Gulfstream IV	D-II	145	77.8	87.8	24.4	71,780
Hamilton Westwind II STD	B-I	96	46.0	45.0	9.2	12,495
HFB-320 Hansa	C-I	125	47.5	54.5	16.2	20,280
Hindustan HS.748-2	B-III	94	98.4	67.0	24.8	44,402
HP Herald	A-III	88	94.8	75.5	24.1	43,000
HS 125 Series 400A	C-I	124	47.0	47.4	16.5	23,300
HS 125 Series 600A	C-I	125	47.0	50.5	17.2	25,000
HS 125 Series 700A	C-I	125	47.0	50.7	17.6	24,200
HS.121 Trident 1E	C-III	137	95.0	114.8	27.0	135,500
HS.121 Trident 2E	C-III	138	98.0	114.8	27.0	144,000
HS.121 Trident 3B	D-III	143	98.0	131.2	28.3	150,000
HS.121 Trident Super 3B	D-III	146	98.0	131.2	28.3	158,000
HS.748 Series 2A	B-III	94	98.5	67.0	24.8	44,490
HS.780 Andover C.Mk.1	B-III	100	98.2	78.0	30.1	50,000
HS.801 Nimrod MR Mk.2	C-III	125 *	114.8	126.8	29.7	177,500
IAI 1121 Jet Comdr.	C-I	130	43.3	50.4	15.8	16,800
IAI Arava-201	A-II	81	68.6	42.7	17.1	15,000
IAI-1124 Westwind	C-I	129	44.8	52.3	15.8	23,500
Ilyushin Il-12	A-III	78	104.0	70.0	30.5	38,000
Ilyushin Il-18	B-IV	103	122.7	117.8	33.3	134,640
Ilyushin Il-62	D-IV	152	141.8	174.3	40.5	363,760
Ilyushin Il-76	B-IV	119	165.7	152.8	48.4	374,785
Ilyushin Il-86	D-IV	141	157.7	195.3	51.8	454,150
Kawasaki C-1	B-III	118 *	100.4	95.1	32.9	85,320
Lapan XT-400	A-I	75	47.9	33.5	14.1	5,555
Learfan 2100	A-I	86	39.3	40.6	12.2	7,400
LET L-410 UVP-E	A-II	81	65.5	47.5	19.1	14,109
Lockheed 100-20 Hercules	C-IV	137	132.6	106.1	39.3	155,000
Lockheed 100-30 Hercules	C-IV	129	132.6	112.7	39.2	155,000
Lockheed 1011-1	C-IV	138	155.3	177.7	55.8	430,000
Lockheed 1011-100	C-IV	140	155.3	177.7	55.8	466,000
Lockheed 1011-200	C-IV	140	155.3	177.7	55.8	466,000
Lockheed 1011-250	D-IV	144	155.3	177.7	55.8	496,000
Lockheed 1011-500	D-IV	144	155.3	164.2	55.8	496,000
Lockheed 1011-500 Ex. Wing	D-IV	148	164.3	164.2	55.8	496,000
Lockheed 1011-600	C-IV	140 *	142.8	141.0	53.0	264,000
Lockheed 1049 Constellat'n	B-IV	113	123.0	113.6	24.8	137,500
Lockheed 1329 JetStar	C-II	132	54.4	60.4	20.4	43,750
Lockheed 1649 Constellat'n	A-IV	89	150.0	116.2	23.4	160,000
Lockheed 188 Electra	C-III	123	99.0	104.6	33.7	116,000
Lockheed 400	C-IV	121 *	119.7	97.8	38.1	84,000
Lockheed 749 Constellat'n	B-IV	93	123.0	95.2	22.4	107,000
Lockheed C-141A Starlifter	C-IV	129	159.9	145.0	39.3	316,600
Lockheed C-141B Starlifter	C-IV	129	159.9	168.3	39.3	343,000
Lockheed C-5B Galaxy	C-VI	135	222.7	247.8	65.1	837,000

Aircraft	Airport Reference Code	Appch Speed Knots	Wingspan Feet	Length Feet	Tail Height Feet	Maximum Takeoff Lbs
Lockheed P-3 Orion	C-III	134	99.7	116.8	33.8	135,000
Lockheed SR-71 Blackbird	E-II	180	55.6	107.4	18.5	170,000
MAI-QSTOL	A-III	85	100.3	98.4	32.8	85,300
Marshall (Shorts) Belfast	C-IV	126	158.8	136.4	47.0	230,000
Martin-404	B-III	98	93.3	74.6	28.7	44,900
MDC-C-133	C-V	128	179.7	157.5	48.2	300,000
MDC-DC-10-10	C-IV	136	155.3	182.3	58.4	443,000
MDC-DC-10-30	D-IV	151	165.3	181.6	58.6	590,000
MDC-DC-10-40	D-IV	145	165.4	182.3	58.6	555,000
MDC-DC-3	A-III	72	95.0	64.5	23.5	25,200
MDC-DC-4	B-III	95	117.5	93.9	27.9	73,000
MDC-DC-6A/B	B-III	108	117.5	105.6	29.3	104,000
MDC-DC-7	B-IV	110	127.5	112.3	31.7	143,000
MDC-DC-8-10	C-IV	131	142.4	150.8	43.3	276,000
MDC-DC-8-20/30/40	C-IV	133	142.4	150.8	43.3	315,000
MDC-DC-8-50	C-IV	137	142.4	150.8	43.3	325,000
MDC-DC-8-61	D-IV	142	142.4	187.4	43.0	325,000
MDC-DC-8-62	C-IV	124	148.4	157.5	43.4	350,000
MDC-DC-8-63	D-IV	147	148.4	187.4	43.0	355,000
MDC-DC-9-10/15	C-III	134	89.4	104.4	27.6	90,700
MDC-DC-9-20	C-III	124	93.3	104.4	27.4	98,000
MDC-DC-9-30	C-III	127	93.3	119.3	27.8	110,000
MDC-DC-9-40	C-III	129	93.3	125.6	28.4	114,000
MDC-DC-9-50	C-III	132	93.3	133.6	28.8	121,000
MDC-DC-9-80	C-III	132	107.8	147.8	30.3	140,000
MDC-DC-9-82	C-III	135	107.8	147.8	30.3	149,500
MDC-MD-11	D-IV	155	169.8	201.3	57.8	602,500
Mitsubishi Diamond MU-300	B-I	100	43.5	48.4	13.8	15,730
Mitsubishi Marquise MU-2N	A-I	88	39.2	39.5	13.7	11,575
Mitsubishi MU-2G	B-I	119	39.2	39.5	13.8	10,800
Mitsubishi Solitaire MU-2P	A-I	87	39.2	33.3	12.9	10,470
Nihon YS-11	B-III	98	105.0	86.3	29.5	54,010
Nomad N 22B	A-II	69	54.0	41.2	18.1	8,950
Nomad N 24A	A-II	73	54.2	47.1	18.2	9,400
Partenavia P.68B Victor	A-I	73	39.3	35.6	11.9	6,283
Piaggio PD-808	B-I	117	43.3	42.2	15.8	18,300
Piaggio P-166 Portofino	A-I	82	47.2	39.0	16.4	9,480
Pilatus PC-6 Porter	A-II	57	49.7	37.4	10.5	4,850
Piper 31-310 Navajo	B-I	100	40.7	32.7	13.0	6,200
Piper 400LS Cheyenne	B-I	110	47.7	43.4	17.0	12,050
Piper 60-602P Aerostar	B-I	94	36.7	34.8	12.1	6,000
PZL-AN-2	A-II	54	59.8	41.9	13.1	12,125
PZL-AN-28	A-II	85	72.4	42.9	16.1	14,330
PZL-M-15 Belphegor	A-II	62	73.6	41.9	17.6	12,465
Rockwell 690A Turbo Comdr.	B-I	97	46.5	44.3	14.9	10,300
Rockwell 840	B-II	98	52.1	42.9	14.9	10,325
Rockwell 980	C-II	121	52.1	42.9	14.9	10,325
Rockwell B-1	D-IV	165 *	137.0	147.0	34.0	477,000
Rockwell Sabre 40	B-I	120	44.5	43.8	16.0	18,650
Rockwell Sabre 60	B-I	120	44.5	48.3	16.0	20,000
Rockwell Sabre 65	B-II	105	50.5	46.1	16.0	24,000

Aircraft	Airport Reference Code	Appch Speed Knots	Wingspan Feet	Length Feet	Tail Height Feet	Maximum Takeoff Lbs
Rockwell Sabre 75A	C-I	137	44.5	47.2	17.2	23,300
Rockwell Sabre 80	C-II	128	50.4	47.2	17.3	24,500
Shorts 330	B-II	96	74.7	58.0	16.2	22,900
Shorts 360	B-II	104	74.8	70.8	23.7	26,453
Swearingen Merlin 3B	B-I	105	46.2	42.2	16.7	12,500
Swearingen Metro	B-I	112	46.2	59.4	16.7	12,500
Tupolev TU-114	C-IV	132 *	167.6	177.5	50.0	361,620
Tupolev TU-124	C-III	132 *	83.8	100.3	50.0	80,482
Tupolev TU-134	D-III	144	95.2	121.5	30.0	103,600
Tupolev TU-144	E-III	178	94.8	212.6	42.2	396,000
Tupolev TU-154	D-IV	145	123.3	157.2	37.4	216,050
VFW-Fokker 614	B-II	111	70.5	67.5	25.6	44,000
Vickers Vanguard 950	B-IV	119	118.0	122.9	34.9	146,500
Vickers VC-10-1100	C-IV	128	146.2	158.7	39.5	312,000
Vickers VC-10-1150	C-IV	138	146.2	171.7	39.5	335,100
Vickers VC-2-810/840	C-III	122	94.0	85.7	26.8	72,500
Volpar Turbo 18	B-I	100	46.0	37.4	9.6	10,280
Yakovlev YAK-40	C-III	128 *	82.2	65.9	21.3	35,275
Yakovlev YAK-42	C-III	128 *	112.2	119.3	32.2	117,950
Yunshu-11	A-II	80 *	55.7	39.4	15.1	7,150

* Approach speeds estimated.

Section 2. Alphabetical Listing (SI Units)

Aircraft	Airport Reference Code	Appch Speed Knots		Wingspan Meters	Length Meters	Tail Height Meters	Maximum Takeoff Kg
Aeritalia G-222	B-III	109		28.6	22.7	9.8	27,987
Aerocom Skyliner	A-II	88		16.5	16.6	5.0	5,670
Aerospatiale C 160 Trans.	C-IV	124		40.0	32.4	11.8	49,258
Aerospatiale NORD-262	B-II	96		21.9	19.3	6.2	10,650
Aerospatiale SE 210 Carav.	C-III	127		34.3	32.0	8.7	52,000
Aerospatiale SN 601 Corv.	B-I	118		12.9	13.8	4.2	6,600
Ahrens AR 404	B-II	98		20.1	16.1	5.8	8,391
AIDC/CAF XC-2	A-III	86		24.9	20.1	7.7	12,474
Airbus A-300-600	C-IV	135		44.8	54.1	16.7	165,000
Airbus A-300-B4	C-IV	132		44.8	53.5	16.9	150,003
Airbus A-310-300	C-IV	125		43.9	46.7	15.9	150,000
Airbus A-320-100	C-III	138		33.9	37.6	11.9	66,000
Air-Metal AM-C 111	B-II	96		19.2	16.8	6.4	8,450
AJI Hustler 400	B-I	98		8.5	10.6	3.0	2,722
Antonov AN-10	C-IV	126		38.0	37.0	9.8	55,111
Antonov AN-12	C-IV	127		38.0	33.2	10.5	55,111
Antonov AN-124	C-VI	124		70.7	68.0	20.2	362,874
Antonov AN-14	A-II	52		22.0	11.3	4.6	3,450
Antonov AN-22	C-V	140	*	64.3	50.9	12.6	226,796
Antonov AN-24	B-III	119		29.2	23.5	8.3	21,004
Antonov AN-26	C-III	121		29.2	23.8	8.6	24,004
Antonov AN-28	A-II	88		22.0	13.0	4.9	5,602
Antonov AN-30	B-III	112		29.4	24.4	8.3	23,151
Antonov AN-72	A-III	89	*	25.8	25.8	8.2	29,937
AW.650 Argosy 220	C-III	123		35.1	26.5	8.2	42,184
AW.660 Argosy C.Mk.1	B-III	113		35.1	27.2	8.2	43,998
BAC 111-200	C-III	129		27.0	28.5	7.5	35,834
BAC 111-300	C-III	128		27.0	28.5	7.5	40,143
BAC 111-400	C-III	137		27.0	28.5	7.5	39,463
BAC 111-475	C-III	135		28.5	28.5	7.5	44,679
BAC 111-500	D-III	144		28.5	32.6	7.5	47,400
BAC/Aerospatiale Concord	D-III	162		25.5	62.6	11.4	185,066
BAe 146-100	B-III	113		26.3	26.2	8.6	33,838
BAe 146-200	B-III	117		26.3	28.6	8.6	40,030
BAe 146-300	C-III	121		26.3	31.8	8.6	47,174
BAe Jetstream 31	B-II	99		15.8	14.4	5.3	6,600
Beech Airliner 1900-C	B-II	120	*	16.6	17.6	4.5	7,530
Beech Airliner C99	B-I	107		14.0	13.6	4.4	5,126
Beech Baron 58	B-I	96		11.5	9.1	3.0	2,495
Beech Baron 58P	B-I	101		11.5	9.1	2.8	2,812
Beech Baron 58TC	B-I	101		11.5	9.1	2.8	2,812
Beech Baron B55	A-I	90		11.5	8.5	2.8	2,313
Beech Baron E55	A-I	88		11.5	8.8	2.8	2,404
Beech Bonanza A36	A-I	72		10.2	8.4	2.6	1,656
Beech Bonanza B36TC	A-I	75		11.5	8.4	2.6	1,746
Beech Bonanza F33A	A-I	70		10.2	8.1	2.5	1,542
Beech Bonanza V35B	A-I	70		10.2	8.0	2.0	1,542
Beech Duchess 76	A-I	76		11.6	8.8	2.9	1,769
Beech Duke B60	B-I	98		11.9	10.3	3.7	3,073

Aircraft	Airport Reference Code	Appch Speed Knots		Wingspan Meters	Length Meters	Tail Height Meters	Maximum Takeoff Kg
Beech E18S	A-II	87		15.1	10.7	2.9	4,218
Beech King Air B100	B-I	111		14.0	12.2	4.7	5,352
Beech King Air C90-1	B-II	100		15.3	10.8	4.3	4,377
Beech King Air F90	B-I	108		14.0	12.1	4.6	4,967
Beech Sierra 200-B24R	A-I	70		10.0	7.8	2.5	1,247
Beech Skipper 77	A-I	63		9.1	7.3	2.1	760
Beech Sundowner 180-C23	A-I	68		10.0	7.8	2.5	1,111
Beech Super King Air B200	B-II	103		16.6	13.4	4.6	5,670
BN-2A Mk.3 Trislander	A-II	65		16.2	13.9	4.3	4,536
Boeing 707-100	C-IV	139		39.9	44.2	12.7	116,727
Boeing 707-200	D-IV	145		39.9	44.2	12.7	116,727
Boeing 707-320	C-IV	139		43.4	46.6	12.9	141,521
Boeing 707-320B	C-IV	136		44.4	46.6	12.8	152,679
Boeing 707-420	C-IV	132		43.4	46.6	12.9	141,521
Boeing 720	C-IV	133		39.9	41.5	12.6	104,009
Boeing 720B	C-IV	137		39.9	41.7	12.6	106,277
Boeing 727-100	C-III	125		32.9	40.6	10.5	76,657
Boeing 727-200	C-III	138		32.9	46.7	10.6	95,028
Boeing 737-100	C-III	137		28.3	28.7	11.3	49,895
Boeing 737-200	C-III	137		28.3	30.5	11.4	52,390
Boeing 737-300	C-III	137		28.9	33.4	11.2	61,235
Boeing 737-400	C-III	139		28.9	36.5	11.2	68,039
Boeing 737-500	C-III	140	*	28.9	31.0	11.2	60,555
Boeing 747-100	D-V	152		59.6	70.7	19.6	272,155
Boeing 747-200	D-V	152		59.6	70.7	19.7	377,842
Boeing 747-300SR	D-V	141		59.6	70.7	19.6	272,155
Boeing 747-400	D-V	154		64.9	70.7	19.6	394,625
Boeing 747-SP	C-V	140		59.6	56.3	20.1	315,700
Boeing 757	C-IV	135		38.0	47.3	13.7	115,666
Boeing 767-200	C-IV	130		47.6	48.5	16.1	142,882
Boeing 767-300	C-IV	130		47.6	55.0	16.0	158,757
Boeing 777-200	D-V	145		60.9	63.7	18.8	286,900
Boeing 777-300	D-V	145		60.9	73.9	18.8	299,370
Boeing B-52	D-V	141	*	56.4	48.0	12.4	221,353
Boeing C97 Stratocruiser	B-IV	105		43.1	33.6	11.7	66,134
Boeing E-3	C-IV	137		44.5	46.6	12.8	147,418
Boeing E-4 (747-200)	D-V	152		59.6	70.7	19.7	377,842
Boeing YC-14	A-IV	89		39.3	40.1	14.7	97,976
Bristol Brittania 300/310	B-IV	117		43.4	37.9	11.4	83,915
Canadair CL-44	C-IV	123		43.4	41.7	11.7	95,254
Canadair CL-600	C-II	125		18.8	20.8	6.3	18,711
Casa C-207A Azor	B-III	102		27.8	20.8	7.7	16,511
Casa C-212-200 Aviocar	A-II	81		19.0	15.2	6.3	7,700
Cessna Citation I	B-I	108		14.4	13.3	4.4	5,375
Cessna Citation II	B-II	108		15.8	14.4	4.6	6,033
Cessna Citation III	B-II	114		16.3	16.9	5.1	9,979
Cessna-150	A-I	55		10.0	7.3	2.4	726
Cessna-177 Cardinal	A-I	64		10.8	8.3	2.6	1,134
Cessna-402 Businessliner	B-I	95		12.1	11.0	3.5	2,858
Cessna-404 Titan	B-I	92		14.1	12.0	4.0	3,810
Cessna-414 Chancellor	B-I	94		13.4	11.1	3.5	3,078
Cessna-421 Golden Eagle	B-I	96		12.7	11.0	3.5	3,379

Aircraft	Airport Reference Code	Appch Speed Knots	Wingspan Meters	Length Meters	Tail Height Meters	Maximum Takeoff Kg
Cessna-441 Conquest	B-II	100	15.0	11.9	4.0	4,502
Convair 240	B-III	107	28.0	22.8	8.2	18,956
Convair 340	B-III	104	32.1	24.8	8.6	22,271
Convair 440	B-III	106	32.1	24.8	8.6	22,271
Convair 580	B-III	107	32.1	24.8	8.9	24,766
Dassault 1150 Atlantic	C-IV	130 *	37.4	31.8	11.3	45,359
Dassault 941	A-II	59	23.4	23.7	9.4	26,490
Dassault FAL-10	B-I	104	13.1	13.9	4.6	8,500
Dassault FAL-20	B-II	107	16.3	17.2	5.3	13,000
Dassault FAL-200	B-II	114	16.3	17.2	5.3	13,903
Dassault FAL-50	B-II	113	18.9	18.5	7.0	17,001
Dassault FAL-900	B-II	100	19.3	20.2	7.6	20,638
Dassault Mercure	B-III	117	30.5	34.8	11.4	56,472
DHC-2 Beaver	A-I	50	14.6	9.2	2.7	2,313
DHC-4 Caribou	A-III	77	29.1	22.1	9.7	12,927
DHC-5D Buffalo	B-III	91	29.3	24.1	8.7	22,317
DHC-6-300 Twin Otter	A-II	75	19.8	15.8	5.9	5,670
DHC-7 Dash 7-100	A-III	83	28.3	24.6	8.0	19,504
DHC-8 Dash 8-300	A-III	90	27.4	25.7	7.5	18,643
DH.104 Dove 8	A-II	84	17.4	11.9	4.1	4,060
DH.106 Comet 4C	B-III	108	35.1	36.0	9.0	73,482
DH.114 Heron 2	A-II	85	21.8	14.8	4.8	6,123
Dornier DO 28D-2	A-II	74	15.5	11.4	3.9	4,017
Dornier LTA	A-II	74 *	17.8	16.6	5.5	6,849
Embraer-110 Bandeirante	B-II	92	15.3	15.1	5.0	5,900
Embraer-121 Xingu	B-I	92	14.4	12.3	4.8	5,670
Embraer-326 Xavante	B-I	102	10.9	10.6	3.7	5,216
Embraer-820 Navajo Chief	A-I	74	12.4	10.5	4.0	3,175
Fairchild C-119	C-III	122	33.3	26.4	8.4	34,927
Fairchild C-121	A-III	88	33.5	23.1	10.4	27,216
Fairchild FH-227 B,D	B-III	105	29.0	25.3	8.4	20,638
Fairchild F-27 A,J	B-III	109	29.0	23.5	8.4	19,051
FMA IA-50 Guarni II	B-II	101	19.5	14.9	5.8	7,121
Fokker F-27-500	B-III	102	29.0	25.1	8.9	20,412
Fokker F-28-1000	B-II	119	23.6	27.4	8.5	29,484
Fokker F-28-2000	B-II	119	23.6	29.6	8.5	29,484
Fokker F-28-3000	C-III	121	25.1	27.4	8.5	33,112
Fokker F-28-4000	C-III	121	25.1	29.6	8.5	33,112
Fokker F-28-6000	B-III	113	25.1	29.6	8.5	33,112
Foxjet ST-600-8	B-I	97	9.6	9.7	3.1	2,064
GAC-100	A-II	86	21.3	20.5	7.6	13,109
Gates Learjet 24	C-I	128	10.9	13.2	3.8	5,897
Gates Learjet 25	C-I	137	10.9	14.5	3.8	6,804
Gates Learjet 28/29	B-I	120	13.3	14.5	3.7	6,804
Gates Learjet 35A/36A	D-I	143	12.0	14.8	3.7	8,301
Gates Learjet 54-55-56	C-I	128	13.3	16.8	4.5	9,752
General Dynamics 880	D-IV	155	36.6	39.4	11.0	87,770
General Dynamics 990	D-IV	156	36.6	42.4	12.0	115,666
Grumman Gulfstream I	B-II	113	23.9	23.0	7.0	16,329
Grumman Gulfstream II	D-II	141	21.0	24.4	7.5	29,620
Grumman Gulfstream III	C-II	136	23.7	25.3	7.4	31,162

Aircraft	Airport Reference Code	Appch Speed Knots	Wingspan Meters	Length Meters	Tail Height Meters	Maximum Takeoff Kg
Grumman Gulfstream II-TT	D-II	142	21.9	24.4	7.5	29,620
Grumman Gulfstream IV	D-II	145	23.7	26.8	7.4	32,559
Hamilton Westwind II STD	B-I	96	14.0	13.7	2.8	5,668
HFB-320 Hansa	C-I	125	14.5	16.6	4.9	9,199
Hindustan HS.748-2	B-III	94	30.0	20.4	7.6	20,140
HP Herald	A-III	88	28.9	23.0	7.3	19,504
HS 125 Series 400A	C-I	124	14.3	14.4	5.0	10,569
HS 125 Series 600A	C-I	125	14.3	15.4	5.2	11,340
HS 125 Series 700A	C-I	125	14.3	15.5	5.4	10,977
HS.121 Trident 1E	C-III	137	29.0	35.0	8.2	61,462
HS.121 Trident 2E	C-III	138	29.9	35.0	8.2	65,317
HS.121 Trident 3B	D-III	143	29.9	40.0	8.6	68,039
HS.121 Trident Super 3B	D-III	146	29.9	40.0	8.6	71,668
HS.748 Series 2A	B-III	94	30.0	20.4	7.6	20,180
HS.780 Andover C.Mk.1	B-III	100	29.9	23.8	9.2	22,680
HS.801 Nimrod MR Mk.2	C-III	125 *	35.0	38.6	9.1	80,513
IAI 1121 Jet Comdr.	C-I	130	13.2	15.4	4.8	7,620
IAI Arava-201	A-II	81	20.9	13.0	5.2	6,804
IAI-1124 Westwind	C-I	129	13.7	15.9	4.8	10,659
Ilyushin Il-12	A-III	78	31.7	21.3	9.3	17,237
Ilyushin Il-18	B-IV	103	37.4	35.9	10.1	61,072
Ilyushin Il-62	D-IV	152	43.2	53.1	12.3	164,999
Ilyushin Il-76	B-IV	119	50.5	46.6	14.8	170,000
Ilyushin Il-86	D-IV	141	48.1	59.5	15.8	205,999
Kawasaki C-1	B-III	118 *	30.6	29.0	10.0	38,701
Lapan XT-400	A-I	75	14.6	10.2	4.3	2,520
Learfan 2100	A-I	86	12.0	12.4	3.7	3,357
LET L-410 UVP-E	A-II	81	20.0	14.5	5.8	6,400
Lockheed 100-20 Hercules	C-IV	137	40.4	32.3	12.0	70,307
Lockheed 100-30 Hercules	C-IV	129	40.4	34.4	11.9	70,307
Lockheed 1011-1	C-IV	138	47.3	54.2	17.0	195,045
Lockheed 1011-100	C-IV	140	47.3	54.2	17.0	211,374
Lockheed 1011-200	C-IV	140	47.3	54.2	17.0	211,374
Lockheed 1011-250	D-IV	144	47.3	54.2	17.0	224,982
Lockheed 1011-500	D-IV	144	47.3	50.0	17.0	224,982
Lockheed 1011-500 Ex. Wing	D-IV	148	50.1	50.0	17.0	224,982
Lockheed 1011-600	C-IV	140 *	43.5	43.0	16.2	119,748
Lockheed 1049 Constellat'n	B-IV	113	37.5	34.6	7.6	62,369
Lockheed 1329 JetStar	C-II	132	16.6	18.4	6.2	19,845
Lockheed 1649 Constellat'n	A-IV	89	45.7	35.4	7.1	72,575
Lockheed 188 Electra	C-III	123	30.2	31.9	10.3	52,617
Lockheed 400	C-IV	121 *	36.5	29.8	11.6	38,102
Lockheed 749 Constellat'n	B-IV	93	37.5	29.0	6.8	48,534
Lockheed C-141A Starlifter	C-IV	129	48.7	44.2	12.0	143,607
Lockheed C-141B Starlifter	C-IV	129	48.7	51.3	12.0	155,582
Lockheed C-5B Galaxy	C-VI	135	67.9	75.5	19.8	379,657
Lockheed P-3 Orion	C-III	134	30.4	35.6	10.3	61,235
Lockheed SR-71 Blackbird	E-II	180	16.9	32.7	5.6	77,111
MAI-QSTOL	A-III	85	30.6	30.0	10.0	38,691
Marshall (Shorts) Belfast	C-IV	126	48.4	41.6	14.3	104,326
Martin-404	B-III	98	28.4	22.7	8.7	20,366

Aircraft	Airport Reference Code	Appch Speed Knots	Wingspan Meters	Length Meters	Tail Height Meters	Maximum Takeoff Kg
MDC-C-133	C-V	128	54.8	48.0	14.7	136,078
MDC-DC-10-10	C-IV	136	47.3	55.6	17.8	200,941
MDC-DC-10-30	D-IV	151	50.4	55.4	17.9	267,619
MDC-DC-10-40	D-IV	145	50.4	55.6	17.9	251,744
MDC-DC-3	A-III	72	29.0	19.7	7.2	11,431
MDC-DC-4	B-III	95	35.8	28.6	8.5	33,112
MDC-DC-6A/B	B-III	108	35.8	32.2	8.9	47,174
MDC-DC-7	B-IV	110	38.9	34.2	9.7	64,864
MDC-DC-8-10	C-IV	131	43.4	46.0	13.2	125,191
MDC-DC-8-20/30/40	C-IV	133	43.4	46.0	13.2	142,882
MDC-DC-8-50	C-IV	137	43.4	46.0	13.2	147,418
MDC-DC-8-61	D-IV	142	43.4	57.1	13.1	147,418
MDC-DC-8-62	C-IV	124	45.2	48.0	13.2	158,757
MDC-DC-8-63	D-IV	147	45.2	57.1	13.1	161,025
MDC-DC-9-10/15	C-III	134	27.2	31.8	8.4	41,141
MDC-DC-9-20	C-III	124	28.4	31.8	8.4	44,452
MDC-DC-9-30	C-III	127	28.4	36.4	8.5	49,895
MDC-DC-9-40	C-III	129	28.4	38.3	8.7	51,710
MDC-DC-9-50	C-III	132	28.4	40.7	8.8	54,885
MDC-DC-9-80	C-III	132	32.9	45.0	9.2	63,503
MDC-DC-9-82	C-III	135	32.9	45.0	9.2	67,812
MDC-MD-11	D-IV	155	51.8	61.4	17.6	273,289
Mitsubishi Diamond MU-300	B-I	100	13.3	14.8	4.2	7,135
Mitsubishi Marquise MU-2N	A-I	88	11.9	12.0	4.2	5,250
Mitsubishi MU-2G	B-I	119	11.9	12.0	4.2	4,899
Mitsubishi Solitaire MU-2P	A-I	87	11.9	10.1	3.9	4,749
Nihon YS-11	B-III	98	32.0	26.3	9.0	24,499
Nomad N 22B	A-II	69	16.5	12.6	5.5	4,060
Nomad N 24A	A-II	73	16.5	14.4	5.5	4,264
Partenavia P.68B Victor	A-I	73	12.0	10.9	3.6	2,850
Piaggio PD-808	B-I	117	13.2	12.9	4.8	8,301
Piaggio P-166 Portofino	A-I	82	14.4	11.9	5.0	4,300
Pilatus PC-6 Porter	A-II	57	15.1	11.4	3.2	2,200
Piper 31-310 Navajo	B-I	100	12.4	10.0	4.0	2,812
Piper 400LS Cheyenne	B-I	110	14.5	13.2	5.2	5,466
Piper 60-602P Aerostar	B-I	94	11.2	10.6	3.7	2,722
PZL-AN-2	A-II	54	18.2	12.8	4.0	5,500
PZL-AN-28	A-II	85	22.1	13.1	4.9	6,500
PZL-M-15 Belphegor	A-II	62	22.4	12.8	5.4	5,654
Rockwell 690A Turbo Comdr.	B-I	97	14.2	13.5	4.5	4,672
Rockwell 840	B-II	98	15.9	13.1	4.5	4,683
Rockwell 980	C-II	121	15.9	13.1	4.5	4,683
Rockwell B-1	D-IV	165 *	41.8	44.8	10.4	216,364
Rockwell Sabre 40	B-I	120	13.6	13.4	4.9	8,459
Rockwell Sabre 60	B-I	120	13.6	14.7	4.9	9,072
Rockwell Sabre 65	B-II	105	15.4	14.1	4.9	10,886
Rockwell Sabre 75A	C-I	137	13.6	14.4	5.2	10,569
Rockwell Sabre 80	C-II	128	15.4	14.4	5.3	11,113
Shorts 330	B-II	96	22.8	17.7	4.9	10,387
Shorts 360	B-II	104	22.8	21.6	7.2	11,999
Swearingen Merlin 3B	B-I	105	14.1	12.9	5.1	5,670

Aircraft	Airport Reference Code	Appch Speed Knots	Wingspan Meters	Length Meters	Tail Height Meters	Maximum Takeoff Kg
Swearingen Metro	B-I	112	14.1	18.1	5.1	5,670
Tupolev TU-114	C-IV	132 *	51.1	54.1	15.2	164,028
Tupolev TU-124	C-III	132 *	25.5	30.6	15.2	36,506
Tupolev TU-134	D-III	144	29.0	37.0	9.1	46,992
Tupolev TU-144	E-III	178	28.9	64.8	12.9	179,623
Tupolev TU-154	D-IV	145	37.6	47.9	11.4	97,999
VFW-Fokker 614	B-II	111	21.5	20.6	7.8	19,958
Vickers Vanguard 950	B-IV	119	36.0	37.5	10.6	66,451
Vickers VC-10-1100	C-IV	128	44.6	48.4	12.0	141,521
Vickers VC-10-1150	C-IV	138	44.6	52.3	12.0	151,999
Vickers VC-2-810/840	C-III	122	28.7	26.1	8.2	32,885
Volpar Turbo 18	B-I	100	14.0	11.4	2.9	4,663
Yakovlev YAK-40	C-III	128 *	25.1	20.1	6.5	16,000
Yakovlev YAK-42	C-III	128 *	34.2	36.4	9.8	53,501
Yunshu-11	A-II	80 *	17.0	12.0	4.6	3,243

* Approach speeds estimated.

Section 3. Listing Small Airplanes by Airport Reference Code (U.S. customary units)

Aircraft	Airport Reference Code	Appch Speed Knots	Wingspan Feet	Length Feet	Tail Height Feet	Maximum Takeoff Lbs
Beech Baron B55	A-I	90	37.8	28.0	9.1	5,100
Beech Baron E55	A-I	88	37.8	29.0	9.1	5,300
Beech Bonanza A36	A-I	72	33.5	27.5	8.6	3,650
Beech Bonanza B36TC	A-I	75	37.8	27.5	8.6	3,850
Beech Bonanza F33A	A-I	70	33.5	26.7	8.2	3,400
Beech Bonanza V35B	A-I	70	33.5	26.4	6.6	3,400
Beech Duchess 76	A-I	76	38.0	29.0	9.5	3,900
Beech Sierra 200-B24R	A-I	70	32.8	25.7	8.2	2,750
Beech Skipper 77	A-I	63	30.0	24.0	6.9	1,675
Beech Sundowner 180-C23	A-I	68	32.8	25.7	8.2	2,450
Cessna-150	A-I	55	32.7	23.8	8.0	1,600
Cessna-177 Cardinal	A-I	64	35.5	27.2	8.5	2,500
DHC-2 Beaver	A-I	50	48.0	30.3	9.0	5,100
Embraer-820 Navajo Chief	A-I	74	40.7	34.6	13.0	7,000
Lapan XT-400	A-I	75	47.9	33.5	14.1	5,555
Learfan 2100	A-I	86	39.3	40.6	12.2	7,400
Mitsubishi Marquise MU-2N	A-I	88	39.2	39.5	13.7	11,575
Mitsubishi Solitaire MU-2P	A-I	87	39.2	33.3	12.9	10,470
Partenavia P.68B Victor	A-I	73	39.3	35.6	11.9	6,283
Piaggio P-166 Portofino	A-I	82	47.2	39.0	16.4	9,480
AJI Hustler 400	B-I	98	28.0	34.8	9.8	6,000
Beech Airliner C99	B-I	107	45.9	44.6	14.4	11,300
Beech Baron 58	B-I	96	37.8	29.8	9.8	5,500
Beech Baron 58P	B-I	101	37.8	29.8	9.1	6,200
Beech Baron 58TC	B-I	101	37.8	29.8	9.1	6,200
Beech Duke B60	B-I	98	39.2	33.8	12.3	6,775
Beech King Air B100	B-I	111	45.8	39.9	15.3	11,800
Beech King Air F90	B-I	108	45.9	39.8	15.1	10,950
Cessna Citation I	B-I	108	47.1	43.5	14.3	11,850
Cessna-402 Businessliner	B-I	95	39.8	36.1	11.6	6,300
Cessna-404 Titan	B-I	92	46.3	39.5	13.2	8,400
Cessna-414 Chancellor	B-I	94	44.1	36.4	11.5	6,785
Cessna-421 Golden Eagle	B-I	96	41.7	36.1	11.6	7,450
Embraer-121 Xingu	B-I	92	47.4	40.2	15.9	12,500
Embraer-326 Xavante	B-I	102	35.6	34.9	12.2	11,500
Foxjet ST-600-8	B-I	97	31.6	31.8	10.2	4,550
Hamilton Westwind II STD	B-I	96	46.0	45.0	9.2	12,495
Mitsubishi MU-2G	B-I	119	39.2	39.5	13.8	10,800
Piper 31-310 Navajo	B-I	100	40.7	32.7	13.0	6,200
Piper 400LS Cheyenne	B-I	110	47.7	43.4	17.0	12,050
Piper 60-602P Aerostar	B-I	94	36.7	34.8	12.1	6,000
Rockwell 690A Turbo Comdr.	B-I	97	46.5	44.3	14.9	10,300
Swearingen Merlin 3B	B-I	105	46.2	42.2	16.7	12,500
Swearingen Metro	B-I	112	46.2	59.4	16.7	12,500
Volpar Turbo 18	B-I	100	46.0	37.4	9.6	10,280
Aerocom Skyliner	A-II	88	54.0	54.3	16.5	12,500
Antonov AN-14	A-II	52	72.1	37.2	15.2	7,607
Antonov AN-28	A-II	88	72.1	42.6	16.1	12,350
Beech E18S	A-II	87	49.7	35.2	9.5	9,300

Aircraft	Airport Reference Code	Appch Speed Knots	Wingspan Feet	Length Feet	Tail Height Feet	Maximum Takeoff Lbs
BN-2A Mk.3 Trislander	A-II	65	53.0	45.7	14.2	10,000
DHC-6-300 Twin Otter	A-II	75	65.0	51.7	19.5	12,500
DH.104 Dove 8	A-II	84	57.0	39.2	13.3	8,950
Dornier DO 28D-2	A-II	74	51.0	37.4	12.8	8,855
Nomad N 22B	A-II	69	54.0	41.2	18.1	8,950
Nomad N 24A	A-II	73	54.2	47.1	18.2	9,400
Pilatus PC-6 Porter	A-II	57	49.7	37.4	10.5	4,850
PZL-AN-2	A-II	54	59.8	41.9	13.1	12,125
PZL-M-15 Belphegor	A-II	62	73.6	41.9	17.6	12,465
Yunshu-11	A-II	80 *	55.7	39.4	15.1	7,150
Beech King Air C90-1	B-II	100	50.2	35.5	14.2	9,650
Beech Super King Air B200	B-II	103	54.5	43.8	15.0	12,500
Cessna-441 Conquest	B-II	100	49.3	39.0	13.1	9,925
Rockwell 840	B-II	98	52.1	42.9	14.9	10,325
Rockwell 980	C-II	121	52.1	42.9	14.9	10,325

* Approach speeds estimated.

Section 4. Listing Large Airplanes by Airport Reference Code (U.S. customary units)

Aircraft	Airport Reference Code	Appch Speed Knots	Wingspan Feet	Length Feet	Tail Height Feet	Maximum Takeoff Lbs
Aerospatiale SN 601 Corv.	B-I	118	42.2	45.4	13.9	14,550
Dassault FAL-10	B-I	104	42.9	45.5	15.1	18,740
Gates Learjet 28/29	B-I	120	43.7	47.6	12.3	15,000
Mitsubishi Diamond MU-300	B-I	100	43.5	48.4	13.8	15,730
Piaggio PD-808	B-I	117	43.3	42.2	15.8	18,300
Rockwell Sabre 40	B-I	120	44.5	43.8	16.0	18,650
Rockwell Sabre 60	B-I	120	44.5	48.3	16.0	20,000
Gates Learjet 24	C-I	128	35.6	43.3	12.6	13,000
Gates Learjet 25	C-I	137	35.6	47.6	12.6	15,000
Gates Learjet 54-55-56	C-I	128	43.7	55.1	14.7	21,500
HFB-320 Hansa	C-I	125	47.5	54.5	16.2	20,280
HS 125 Series 400A	C-I	124	47.0	47.4	16.5	23,300
HS 125 Series 600A	C-I	125	47.0	50.5	17.2	25,000
HS 125 Series 700A	C-I	125	47.0	50.7	17.6	24,200
IAI 1121 Jet Comdr.	C-I	130	43.3	50.4	15.8	16,800
IAI-1124 Westwind	C-I	129	44.8	52.3	15.8	23,500
Rockwell Sabre 75A	C-I	137	44.5	47.2	17.2	23,300
Gates Learjet 35A/36A	D-I	143	39.5	48.7	12.3	18,300
Casa C-212-200 Aviocar	A-II	81	62.3	49.8	20.7	16,976
Dassault 941	A-II	59	76.7	77.9	30.7	58,400
DH.114 Heron 2	A-II	85	71.5	48.5	15.6	13,500
Dornier LTA	A-II	74 *	58.4	54.4	18.2	15,100
GAC-100	A-II	86	70.0	67.3	24.9	28,900
IAI Arava-201	A-II	81	68.6	42.7	17.1	15,000
LET L-410 UVP-E	A-II	81	65.5	47.5	19.1	14,109
PZL-AN-28	A-II	85	72.4	42.9	16.1	14,330

Aircraft	Airport Reference Code	Appch Speed Knots	Wingspan Feet	Length Feet	Tail Height Feet	Maximum Takeoff Lbs
Aerospatiale NORD-262	B-II	96	71.9	63.3	20.4	23,480
Ahrens AR 404	B-II	98	66.0	52.7	19.0	18,500
Air-Metal AM-C 111	B-II	96	63.0	55.2	21.0	18,629
BAe Jetstream 31	B-II	99	52.0	47.2	17.5	14,550
Beech Airliner 1900-C	B-II	120 *	54.5	57.8	14.9	16,600
Cessna Citation II	B-II	108	51.7	47.2	15.0	13,300
Cessna Citation III	B-II	114	53.5	55.5	16.8	22,000
Dassault FAL-20	B-II	107	53.5	56.3	17.4	28,660
Dassault FAL-200	B-II	114	53.5	56.3	17.4	30,650
Dassault FAL-50	B-II	113	61.9	60.8	22.9	37,480
Dassault FAL-900	B-II	100	63.4	66.3	24.8	45,500
Embraer-110 Bandeirante	B-II	92	50.3	49.5	16.5	13,007
FMA IA-50 Guarni II	B-II	101	64.1	48.8	19.1	15,700
Fokker F-28-1000	B-II	119	77.3	89.9	27.8	65,000
Fokker F-28-2000	B-II	119	77.3	97.2	27.8	65,000
Grumman Gulfstream I	B-II	113	78.3	75.3	23.0	36,000
Rockwell Sabre 65	B-II	105	50.5	46.1	16.0	24,000
Shorts 330	B-II	96	74.7	58.0	16.2	22,900
Shorts 360	B-II	104	74.8	70.8	23.7	26,453
VFW-Fokker 614	B-II	111	70.5	67.5	25.6	44,000
Canadair CL-600	C-II	125	61.8	68.4	20.7	41,250
Grumman Gulfstream III	C-II	136	77.8	83.1	24.4	68,700
Lockheed 1329 JetStar	C-II	132	54.4	60.4	20.4	43,750
Rockwell Sabre 80	C-II	128	50.4	47.2	17.3	24,500
Grumman Gulfstream II	D-II	141	68.8	79.9	24.5	65,300
Grumman Gulfstream II-TT	D-II	142	71.7	79.9	24.5	65,300
Grumman Gulfstream IV	D-II	145	77.8	87.8	24.4	71,780
Lockheed SR-71 Blackbird	E-II	180	55.6	107.4	18.5	170,000
AIDC/CAF XC-2	A-III	86	81.7	65.9	25.3	27,500
Antonov AN-72	A-III	89 *	84.7	84.7	27.0	66,000
DHC-4 Caribou	A-III	77	95.6	72.6	31.8	28,500
DHC-7 Dash 7-100	A-III	83	93.0	80.7	26.2	43,000
DHC-8 Dash 8-300	A-III	90	90.0	84.3	24.6	41,100
Fairchild C-121	A-III	88	110.0	75.8	34.1	60,000
HP Herald	A-III	88	94.8	75.5	24.1	43,000
Ilyushin Il-12	A-III	78	104.0	70.0	30.5	38,000
MAI-QSTOL	A-III	85	100.3	98.4	32.8	85,300
MDC-DC-3	A-III	72	95.0	64.5	23.5	25,200
Aeritalia G-222	B-III	109	93.8	74.4	32.0	61,700
Antonov AN-24	B-III	119	95.8	77.2	27.3	46,305
Antonov AN-30	B-III	112	96.4	80.1	27.3	51,040
AW.660 Argosy C.Mk.1	B-III	113	115.0	89.1	27.0	97,000
BAe 146-100	B-III	113	86.4	85.8	28.3	74,600
BAe 146-200	B-III	117	86.4	93.7	28.3	88,250
Casa C-207A Azor	B-III	102	91.2	68.4	25.4	36,400
Convair 240	B-III	107	91.8	74.7	26.9	41,790
Convair 340	B-III	104	105.3	81.5	28.2	49,100
Convair 440	B-III	106	105.3	81.5	28.2	49,100
Convair 580	B-III	107	105.3	81.5	29.2	54,600
Dassault Mercure	B-III	117	100.2	114.3	37.3	124,500
DHC-5D Buffalo	B-III	91	96.0	79.0	28.7	49,200

Aircraft	Airport Reference Code	Appch Speed Knots	Wingspan Feet	Length Feet	Tail Height Feet	Maximum Takeoff Lbs
DH.106 Comet 4C	B-III	108	115.0	118.0	29.5	162,000
Fairchild FH-227 B,D	B-III	105	95.2	83.1	27.5	45,500
Fairchild F-27 A,J	B-III	109	95.2	77.2	27.5	42,000
Fokker F-27-500	B-III	102	95.2	82.3	29.3	45,000
Fokker F-28-6000	B-III	113	82.3	97.2	27.8	73,000
Hindustan HS.748-2	B-III	94	98.4	67.0	24.8	44,402
HS.748 Series 2A	B-III	94	98.5	67.0	24.8	44,490
HS.780 Andover C.Mk.1	B-III	100	98.2	78.0	30.1	50,000
Kawasaki C-1	B-III	118 *	100.4	95.1	32.9	85,320
Martin-404	B-III	98	93.3	74.6	28.7	44,900
MDC-DC-4	B-III	95	117.5	93.9	27.9	73,000
MDC-DC-6A/B	B-III	108	117.5	105.6	29.3	104,000
Nihon YS-11	B-III	98	105.0	86.3	29.5	54,010
Aerospatiale SE 210 Carav.	C-III	127	112.5	105.0	28.6	114,640
Airbus A-320-100	C-III	138	111.3	123.3	39.1	145,505
Antonov AN-26	C-III	121	95.8	78.1	28.1	52,920
AW.650 Argosy 220	C-III	123	115.0	86.8	27.0	93,000
BAC 111-200	C-III	129	88.5	93.5	24.5	79,000
BAC 111-300	C-III	128	88.5	93.5	24.5	88,500
BAC 111-400	C-III	137	88.5	93.5	24.5	87,000
BAC 111-475	C-III	135	93.5	93.5	24.5	98,500
BAe 146-300	C-III	121	86.4	104.2	28.1	104,000
Boeing 727-100	C-III	125	108.0	133.2	34.3	169,000
Boeing 727-200	C-III	138	108.0	153.2	34.9	209,500
Boeing 737-100	C-III	137	93.0	94.0	37.2	110,000
Boeing 737-200	C-III	137	93.0	100.2	37.3	115,500
Boeing 737-300	C-III	137	94.8	109.6	36.6	135,000
Boeing 737-400	C-III	139	94.8	119.6	36.6	150,000
Boeing 737-500	C-III	140 *	94.8	101.8	36.6	133,500
Fairchild C-119	C-III	122	109.3	86.5	27.5	77,000
Fokker F-28-3000	C-III	121	82.3	89.9	27.8	73,000
Fokker F-28-4000	C-III	121	82.3	97.2	27.8	73,000
HS.121 Trident 1E	C-III	137	95.0	114.8	27.0	135,500
HS.121 Trident 2E	C-III	138	98.0	114.8	27.0	144,000
HS.801 Nimrod MR Mk.2	C-III	125 *	114.8	126.8	29.7	177,500
Lockheed 188 Electra	C-III	123	99.0	104.6	33.7	116,000
Lockheed P-3 Orion	C-III	134	99.7	116.8	33.8	135,000
MDC-DC-9-10/15	C-III	134	89.4	104.4	27.6	90,700
MDC-DC-9-20	C-III	124	93.3	104.4	27.4	98,000
MDC-DC-9-30	C-III	127	93.3	119.3	27.8	110,000
MDC-DC-9-40	C-III	129	93.3	125.6	28.4	114,000
MDC-DC-9-50	C-III	132	93.3	133.6	28.8	121,000
MDC-DC-9-80	C-III	132	107.8	147.8	30.3	140,000
MDC-DC-9-82	C-III	135	107.8	147.8	30.3	149,500
Tupolev TU-124	C-III	132 *	83.8	100.3	50.0	80,482
Vickers VC-2-810/840	C-III	122	94.0	85.7	26.8	72,500
Yakovlev YAK-40	C-III	128 *	82.2	65.9	21.3	35,275
Yakovlev YAK-42	C-III	128 *	112.2	119.3	32.2	117,950
BAC 111-500	D-III	144	93.5	107.0	24.5	104,500
BAC/Aerospatiale Concord	D-III	162	83.8	205.4	37.4	408,000
HS.121 Trident 3B	D-III	143	98.0	131.2	28.3	150,000

Aircraft	Airport Reference Code	Appch Speed Knots		Wingspan Feet	Length Feet	Tail Height Feet	Maximum Takeoff Lbs
HS.121 Trident Super 3B	D-III	146		98.0	131.2	28.3	158,000
Tupolev TU-134	D-III	144		95.2	121.5	30.0	103,600
Tupolev TU-144	E-III	178		94.8	212.6	42.2	396,000
Boeing YC-14	A-IV	89		129.0	131.7	48.3	216,000
Lockheed 1649 Constellat'n	A-IV	89		150.0	116.2	23.4	160,000
Boeing C97 Stratocruiser	B-IV	105		141.3	110.3	38.3	145,800
Bristol Brittania 300/310	B-IV	117		142.3	124.2	37.5	185,000
Ilyushin Il-18	B-IV	103		122.7	117.8	33.3	134,640
Ilyushin Il-76	B-IV	119		165.7	152.8	48.4	374,785
Lockheed 1049 Constellat'n	B-IV	113		123.0	113.6	24.8	137,500
Lockheed 749 Constellat'n	B-IV	93		123.0	95.2	22.4	107,000
MDC-DC-7	B-IV	110		127.5	112.3	31.7	143,000
Vickers Vanguard 950	B-IV	119		118.0	122.9	34.9	146,500
Aerospatiale C 160 Trans.	C-IV	124		131.3	106.3	38.7	108,596
Airbus A-300-600	C-IV	135		147.1	177.5	54.7	363,763
Airbus A-300-B4	C-IV	132		147.1	175.5	55.5	330,700
Airbus A-310-300	C-IV	125		144.1	153.2	52.3	330,693
Antonov AN-10	C-IV	126		124.8	121.4	32.2	121,500
Antonov AN-12	C-IV	127		124.8	109.0	34.6	121,500
Boeing 707-100	C-IV	139		130.8	145.1	41.7	257,340
Boeing 707-320	C-IV	139		142.4	152.9	42.2	312,000
Boeing 707-320B	C-IV	136		145.8	152.9	42.1	336,600
Boeing 707-420	C-IV	132		142.4	152.9	42.2	312,000
Boeing 720	C-IV	133		130.8	136.2	41.4	229,300
Boeing 720B	C-IV	137		130.8	136.8	41.2	234,300
Boeing 757	C-IV	135		124.8	155.3	45.1	255,000
Boeing 767-200	C-IV	130		156.1	159.2	52.9	315,000
Boeing 767-300	C-IV	130		156.1	180.3	52.6	350,000
Boeing E-3	C-IV	137		145.9	153.0	42.0	325,000
Canadair CL-44	C-IV	123		142.3	136.8	38.4	210,000
Dassault 1150 Atlantic	C-IV	130	*	122.7	104.2	37.2	100,000
Lockheed 100-20 Hercules	C-IV	137		132.6	106.1	39.3	155,000
Lockheed 100-30 Hercules	C-IV	129		132.6	112.7	39.2	155,000
Lockheed 1011-1	C-IV	138		155.3	177.7	55.8	430,000
Lockheed 1011-100	C-IV	140		155.3	177.7	55.8	466,000
Lockheed 1011-200	C-IV	140		155.3	177.7	55.8	466,000
Lockheed 1011-600	C-IV	140	*	142.8	141.0	53.0	264,000
Lockheed 400	C-IV	121	*	119.7	97.8	38.1	84,000
Lockheed C-141A Starlifter	C-IV	129		159.9	145.0	39.3	316,600
Lockheed C-141B Starlifter	C-IV	129		159.9	168.3	39.3	343,000
Marshall (Shorts) Belfast	C-IV	126		158.8	136.4	47.0	230,000
MDC-DC-10-10	C-IV	136		155.3	182.3	58.4	443,000
MDC-DC-8-10	C-IV	131		142.4	150.8	43.3	276,000
MDC-DC-8-20/30/40	C-IV	133		142.4	150.8	43.3	315,000
MDC-DC-8-50	C-IV	137		142.4	150.8	43.3	325,000
MDC-DC-8-62	C-IV	124		148.4	157.5	43.4	350,000
Tupolev TU-114	C-IV	132	*	167.6	177.5	50.0	361,620
Vickers VC-10-1100	C-IV	128		146.2	158.7	39.5	312,000
Vickers VC-10-1150	C-IV	138		146.2	171.7	39.5	335,100
Boeing 707-200	D-IV	145		130.8	145.1	41.7	257,340

Aircraft	Airport Reference Code	Appch Speed Knots		Wingspan Feet	Length Feet	Tail Height Feet	Maximum Takeoff Lbs
General Dynamics 880	D-IV	155		120.0	129.3	36.0	193,500
General Dynamics 990	D-IV	156		120.0	139.2	39.5	255,000
Ilyushin Il-62	D-IV	152		141.8	174.3	40.5	363,760
Ilyushin Il-86	D-IV	141		157.7	195.3	51.8	454,150
Lockheed 1011-250	D-IV	144		155.3	177.7	55.8	496,000
Lockheed 1011-500	D-IV	144		155.3	164.2	55.8	496,000
Lockheed 1011-500 Ex. Wing	D-IV	148		164.3	164.2	55.8	496,000
MDC-DC-10-30	D-IV	151		165.3	181.6	58.6	590,000
MDC-DC-10-40	D-IV	145		165.4	182.3	58.6	555,000
MDC-DC-8-61	D-IV	142		142.4	187.4	43.0	325,000
MDC-DC-8-63	D-IV	147		148.4	187.4	43.0	355,000
MDC-MD-11	D-IV	155		169.8	201.3	57.8	602,500
Rockwell B-1	D-IV	165	*	137.0	147.0	34.0	477,000
Tupolev TU-154	D-IV	145		123.3	157.2	37.4	216,050
Antonov AN-22	C-V	140	*	211.0	167.0	41.2	500,000
Boeing 747-SP	C-V	140		195.7	184.8	65.8	696,000
MDC-C-133	C-V	128		179.7	157.5	48.2	300,000
Boeing 747-100	D-V	152		195.7	231.8	64.3	600,000
Boeing 747-200	D-V	152		195.7	231.8	64.7	833,000
Boeing 747-300SR	D-V	141		195.7	231.8	64.3	600,000
Boeing 747-400	D-V	154		213.0	231.8	64.3	870,000
Boeing 777-200	D-V	145		199.9	209.1	18.8	286,900
Boeing 777-300	D-V	145		199.9	242.3	18.8	299,370
Boeing B-52	D-V	141	*	185.0	157.6	40.8	488,000
Boeing E-4 (747-200)	D-V	152		195.7	231.8	64.7	833,000
Antonov AN-124	C-VI	124		232.0	223.0	66.2	800,000
Lockheed C-5B Galaxy	C-VI	135		222.7	247.8	65.1	837,000

* Approach speeds estimated.

Section 5. Listing Small Airplanes by Airport Reference Code (SI units)

Aircraft	Airport Reference Code	Appch Speed Knots	Wingspan Meters	Length Meters	Tail Height Meters	Maximum Takeoff Kg
Beech Baron B55	A-I	90	11.5	8.5	2.8	2,313
Beech Baron E55	A-I	88	11.5	8.8	2.8	2,404
Beech Bonanza A36	A-I	72	10.2	8.4	2.6	1,656
Beech Bonanza B36TC	A-I	75	11.5	8.4	2.6	1,746
Beech Bonanza F33A	A-I	70	10.2	8.1	2.5	1,542
Beech Bonanza V35B	A-I	70	10.2	8.0	2.0	1,542
Beech Duchess 76	A-I	76	11.6	8.8	2.9	1,769
Beech Sierra 200-B24R	A-I	70	10.0	7.8	2.5	1,247
Beech Skipper 77	A-I	63	9.1	7.3	2.1	760
Beech Sundowner 180-C23	A-I	68	10.0	7.8	2.5	1,111
Cessna-150	A-I	55	10.0	7.3	2.4	726
Cessna-177 Cardinal	A-I	64	10.8	8.3	2.6	1,134
DHC-2 Beaver	A-I	50	14.6	9.2	2.7	2,313
Embraer-820 Navajo Chief	A-I	74	12.4	10.5	4.0	3,175
Lapan XT-400	A-I	75	14.6	10.2	4.3	2,520
Learfan 2100	A-I	86	12.0	12.4	3.7	3,357
Mitsubishi Marquise MU-2N	A-I	88	11.9	12.0	4.2	5,250
Mitsubishi Solitaire MU-2P	A-I	87	11.9	10.1	3.9	4,749
Partenavia P.68B Victor	A-I	73	12.0	10.9	3.6	2,850
Piaggio P-166 Portofino	A-I	82	14.4	11.9	5.0	4,300
AJI Hustler 400	B-I	98	8.5	10.6	3.0	2,722
Beech Airliner C99	B-I	107	14.0	13.6	4.4	5,126
Beech Baron 58	B-I	96	11.5	9.1	3.0	2,495
Beech Baron 58P	B-I	101	11.5	9.1	2.8	2,812
Beech Baron 58TC	B-I	101	11.5	9.1	2.8	2,812
Beech Duke B60	B-I	98	11.9	10.3	3.7	3,073
Beech King Air B100	B-I	111	14.0	12.2	4.7	5,352
Beech King Air F90	B-I	108	14.0	12.1	4.6	4,967
Cessna Citation I	B-I	108	14.4	13.3	4.4	5,375
Cessna-402 Businessliner	B-I	95	12.1	11.0	3.5	2,858
Cessna-404 Titan	B-I	92	14.1	12.0	4.0	3,810
Cessna-414 Chancellor	B-I	94	13.4	11.1	3.5	3,078
Cessna-421 Golden Eagle	B-I	96	12.7	11.0	3.5	3,379
Embraer-121 Xingu	B-I	92	14.4	12.3	4.8	5,670
Embraer-326 Xavante	B-I	102	10.9	10.6	3.7	5,216
Foxjet ST-600-8	B-I	97	9.6	9.7	3.1	2,064
Hamilton Westwind II STD	B-I	96	14.0	13.7	2.8	5,668
Mitsubishi MU-2G	B-I	119	11.9	12.0	4.2	4,899
Piper 31-310 Navajo	B-I	100	12.4	10.0	4.0	2,812
Piper 400LS Cheyenne	B-I	110	14.5	13.2	5.2	5,466
Piper 60-602P Aerostar	B-I	94	11.2	10.6	3.7	2,722
Rockwell 690A Turbo Comdr.	B-I	97	14.2	13.5	4.5	4,672
Swearingen Merlin 3B	B-I	105	14.1	12.9	5.1	5,670
Swearingen Metro	B-I	112	14.1	18.1	5.1	5,670
Volpar Turbo 18	B-I	100	14.0	11.4	2.9	4,663
Aerocom Skyliner	A-II	88	16.5	16.6	5.0	5,670
Antonov AN-14	A-II	52	22.0	11.3	4.6	3,450
Antonov AN-28	A-II	88	22.0	13.0	4.9	5,602
Beech E18S	A-II	87	15.1	10.7	2.9	4,218

Aircraft	Airport Reference Code	Appch Speed Knots	Wingspan Meters	Length Meters	Tail Height Meters	Maximum Takeoff Kg
BN-2A Mk.3 Trislander	A-II	65	16.2	13.9	4.3	4,536
DHC-6-300 Twin Otter	A-II	75	19.8	15.8	5.9	5,670
DH.104 Dove 8	A-II	84	17.4	11.9	4.1	4,060
Dornier DO 28D-2	A-II	74	15.5	11.4	3.9	4,017
Nomad N 22B	A-II	69	16.5	12.6	5.5	4,060
Nomad N 24A	A-II	73	16.5	14.4	5.5	4,264
Pilatus PC-6 Porter	A-II	57	15.1	11.4	3.2	2,200
PZL-AN-2	A-II	54	18.2	12.8	4.0	5,500
PZL-M-15 Belphegor	A-II	62	22.4	12.8	5.4	5,654
Yunshu-11	A-II	80 *	17.0	12.0	4.6	3,243
Beech King Air C90-1	B-II	100	15.3	10.8	4.3	4,377
Beech Super King Air B200	B-II	103	16.6	13.4	4.6	5,670
Cessna-441 Conquest	B-II	100	15.0	11.9	4.0	4,502
Rockwell 840	B-II	98	15.9	13.1	4.5	4,683
Rockwell 980	C-II	121	15.9	13.1	4.5	4,683

* Approach speeds estimated.

Section 6. Listing Large Airplanes by Airport Reference Code (SI units)

Aircraft	Airport Reference Code	Appch Speed Knots	Wingspan Meters	Length Meters	Tail Height Meters	Maximum Takeoff Kg
Aerospatiale SN 601 Corv.	B-I	118	12.9	13.8	4.2	6,600
Dassault FAL-10	B-I	104	13.1	13.9	4.6	8,500
Gates Learjet 28/29	B-I	120	13.3	14.5	3.7	6,804
Mitsubishi Diamond MU-300	B-I	100	13.3	14.8	4.2	7,135
Piaggio PD-808	B-I	117	13.2	12.9	4.8	8,301
Rockwell Sabre 40	B-I	120	13.6	13.4	4.9	8,459
Rockwell Sabre 60	B-I	120	13.6	14.7	4.9	9,072
Gates Learjet 24	C-I	128	10.9	13.2	3.8	5,897
Gates Learjet 25	C-I	137	10.9	14.5	3.8	6,804
Gates Learjet 54-55-56	C-I	128	13.3	16.8	4.5	9,752
HFB-320 Hansa	C-I	125	14.5	16.6	4.9	9,199
HS 125 Series 400A	C-I	124	14.3	14.4	5.0	10,569
HS 125 Series 600A	C-I	125	14.3	15.4	5.2	11,340
HS 125 Series 700A	C-I	125	14.3	15.5	5.4	10,977
IAI 1121 Jet Comdr.	C-I	130	13.2	15.4	4.8	7,620
IAI-1124 Westwind	C-I	129	13.7	15.9	4.8	10,659
Rockwell Sabre 75A	C-I	137	13.6	14.4	5.2	10,569
Gates Learjet 35A/36A	D-I	143	12.0	14.8	3.7	8,301
Casa C-212-200 Aviocar	A-II	81	19.0	15.2	6.3	7,700
Dassault 941	A-II	59	23.4	23.7	9.4	26,490
DH.114 Heron 2	A-II	85	21.8	14.8	4.8	6,123
Dornier LTA	A-II	74 *	17.8	16.6	5.5	6,849
GAC-100	A-II	86	21.3	20.5	7.6	13,109
IAI Arava-201	A-II	81	20.9	13.0	5.2	6,804
LET L-410 UVP-E	A-II	81	20.0	14.5	5.8	6,400
PZL-AN-28	A-II	85	22.1	13.1	4.9	6,500

Aircraft	Airport Reference Code	Appch Speed Knots	Wingspan Meters	Length Meters	Tail Height Meters	Maximum Takeoff Kg
Aerospatiale NORD-262	B-II	96	21.9	19.3	6.2	10,650
Ahrens AR 404	B-II	98	20.1	16.1	5.8	8,391
Air-Metal AM-C 111	B-II	96	19.2	16.8	6.4	8,450
BAe Jetstream 31	B-II	99	15.8	14.4	5.3	6,600
Beech Airliner 1900-C	B-II	120 *	16.6	17.6	4.5	7,530
Cessna Citation II	B-II	108	15.8	14.4	4.6	6,033
Cessna Citation III	B-II	114	16.3	16.9	5.1	9,979
Dassault FAL-20	B-II	107	16.3	17.2	5.3	13,000
Dassault FAL-200	B-II	114	16.3	17.2	5.3	13,903
Dassault FAL-50	B-II	113	18.9	18.5	7.0	17,001
Dassault FAL-900	B-II	100	19.3	20.2	7.6	20,638
Embraer-110 Bandeirante	B-II	92	15.3	15.1	5.0	5,900
FMA IA-50 Guarni II	B-II	101	19.5	14.9	5.8	7,121
Fokker F-28-1000	B-II	119	23.6	27.4	8.5	29,484
Fokker F-28-2000	B-II	119	23.6	29.6	8.5	29,484
Grumman Gulfstream I	B-II	113	23.9	23.0	7.0	16,329
Rockwell Sabre 65	B-II	105	15.4	14.1	4.9	10,886
Shorts 330	B-II	96	22.8	17.7	4.9	10,387
Shorts 360	B-II	104	22.8	21.6	7.2	11,999
VFW-Fokker 614	B-II	111	21.5	20.6	7.8	19,958
Canadair CL-600	C-II	125	18.8	20.8	6.3	18,711
Grumman Gulfstream III	C-II	136	23.7	25.3	7.4	31,162
Lockheed 1329 JetStar	C-II	132	16.6	18.4	6.2	19,845
Rockwell Sabre 80	C-II	128	15.4	14.4	5.3	11,113
Grumman Gulfstream II	D-II	141	21.0	24.4	7.5	29,620
Grumman Gulfstream II-TT	D-II	142	21.9	24.4	7.5	29,620
Grumman Gulfstream IV	D-II	145	23.7	26.8	7.4	32,559
Lockheed SR-71 Blackbird	E-II	180	16.9	32.7	5.6	77,111
AIDC/CAF XC-2	A-III	86	24.9	20.1	7.7	12,474
Antonov AN-72	A-III	89 *	25.8	25.8	8.2	29,937
DHC-4 Caribou	A-III	77	29.1	22.1	9.7	12,927
DHC-7 Dash 7-100	A-III	83	28.3	24.6	8.0	19,504
DHC-8 Dash 8-300	A-III	90	27.4	25.7	7.5	18,643
Fairchild C-121	A-III	88	33.5	23.1	10.4	27,216
HP Herald	A-III	88	28.9	23.0	7.3	19,504
Ilyushin Il-12	A-III	78	31.7	21.3	9.3	17,237
MAI-QSTOL	A-III	85	30.6	30.0	10.0	38,691
MDC-DC-3	A-III	72	29.0	19.7	7.2	11,431
Aeritalia G-222	B-III	109	28.6	22.7	9.8	27,987
Antonov AN-24	B-III	119	29.2	23.5	8.3	21,004
Antonov AN-30	B-III	112	29.4	24.4	8.3	23,151
AW.660 Argosy C.Mk.1	B-III	113	35.1	27.2	8.2	43,998
BAe 146-100	B-III	113	26.3	26.2	8.6	33,838
BAe 146-200	B-III	117	26.3	28.6	8.6	40,030
Casa C-207A Azor	B-III	102	27.8	20.8	7.7	16,511
Convair 240	B-III	107	28.0	22.8	8.2	18,956
Convair 340	B-III	104	32.1	24.8	8.6	22,271
Convair 440	B-III	106	32.1	24.8	8.6	22,271
Convair 580	B-III	107	32.1	24.8	8.9	24,766
Dassault Mercure	B-III	117	30.5	34.8	11.4	56,472
DHC-5D Buffalo	B-III	91	29.3	24.1	8.7	22,317

Aircraft	Airport Reference Code	Appch Speed Knots	Wingspan Meters	Length Meters	Tail Height Meters	Maximum Takeoff Kg
DH.106 Comet 4C	B-III	108	35.1	36.0	9.0	73,482
Fairchild FH-227 B,D	B-III	105	29.0	25.3	8.4	20,638
Fairchild F-27 A,J	B-III	109	29.0	23.5	8.4	19,051
Fokker F-27-500	B-III	102	29.0	25.1	8.9	20,412
Fokker F-28-6000	B-III	113	25.1	29.6	8.5	33,112
Hindustan HS.748-2	B-III	94	30.0	20.4	7.6	20,140
HS:748 Series 2A	B-III	94	30.0	20.4	7.6	20,180
HS.780 Andover C.Mk.1	B-III	100	29.9	23.8	9.2	22,680
Kawasaki C-1	B-III	118 *	30.6	29.0	10.0	38,701
Martin-404	B-III	98	28.4	22.7	8.7	20,366
MDC-DC-4	B-III	95	35.8	28.6	8.5	33,112
MDC-DC-6A/B	B-III	108	35.8	32.2	8.9	47,174
Nihon YS-11	B-III	98	32.0	26.3	9.0	24,499
Aerospatiale SE 210 Carav.	C-III	127	34.3	32.0	8.7	52,000
Airbus A-320-100	C-III	138	33.9	37.6	11.9	66,000
Antonov AN-26	C-III	121	29.2	23.8	8.6	24,004
AW.650 Argosy 220	C-III	123	35.1	26.5	8.2	42,184
BAC 111-200	C-III	129	27.0	28.5	7.5	35,834
BAC 111-300	C-III	128	27.0	28.5	7.5	40,143
BAC 111-400	C-III	137	27.0	28.5	7.5	39,463
BAC 111-475	C-III	135	28.5	28.5	7.5	44,679
BAe 146-300	C-III	121	26.3	31.8	8.6	47,174
Boeing 727-100	C-III	125	32.9	40.6	10.5	76,657
Boeing 727-200	C-III	138	32.9	46.7	10.6	95,028
Boeing 737-100	C-III	137	28.3	28.7	11.3	49,895
Boeing 737-200	C-III	137	28.3	30.5	11.4	52,390
Boeing 737-300	C-III	137	28.9	33.4	11.2	61,235
Boeing 737-400	C-III	139	28.9	36.5	11.2	68,039
Boeing 737-500	C-III	140 *	28.9	31.0	11.2	60,555
Fairchild C-119	C-III	122	33.3	26.4	8.4	34,927
Fokker F-28-3000	C-III	121	25.1	27.4	8.5	33,112
Fokker F-28-4000	C-III	121	25.1	29.6	8.5	33,112
HS.121 Trident 1E	C-III	137	29.0	35.0	8.2	61,462
HS.121 Trident 2E	C-III	138	29.9	35.0	8.2	65,317
HS.801 Nimrod MR Mk.2	C-III	125 *	35.0	38.6	9.1	80,513
Lockheed 188 Electra	C-III	123	30.2	31.9	10.3	52,617
Lockheed P-3 Orion	C-III	134	30.4	35.6	10.3	61,235
MDC-DC-9-10/15	C-III	134	27.2	31.8	8.4	41,141
MDC-DC-9-20	C-III	124	28.4	31.8	8.4	44,452
MDC-DC-9-30	C-III	127	28.4	36.4	8.5	49,895
MDC-DC-9-40	C-III	129	28.4	38.3	8.7	51,710
MDC-DC-9-50	C-III	132	28.4	40.7	8.8	54,885
MDC-DC-9-80	C-III	132	32.9	45.0	9.2	63,503
MDC-DC-9-82	C-III	135	32.9	45.0	9.2	67,812
Tupolev TU-124	C-III	132 *	25.5	30.6	15.2	36,506
Vickers VC-2-810/840	C-III	122	28.7	26.1	8.2	32,885
Yakovlev YAK-40	C-III	128 *	25.1	20.1	6.5	16,000
Yakovlev YAK-42	C-III	128 *	34.2	36.4	9.8	53,501
BAC 111-500	D-III	144	28.5	32.6	7.5	47,400
BAC/Aerospatiale Concord	D-III	162	25.5	62.6	11.4	185,066
HS.121 Trident 3B	D-III	143	29.9	40.0	8.6	68,039

Aircraft	Airport Reference Code	Appch Speed Knots		Wingspan Meters	Length Meters	Tail Height Meters	Maximum Takeoff Kg
HS.121 Trident Super 3B	D-III	146		29.9	40.0	8.6	71,668
Tupolev TU-134	D-III	144		29.0	37.0	9.1	46,992
Tupolev TU-144	E-III	178		28.9	64.8	12.9	179,623
Boeing YC-14	A-IV	89		39.3	40.1	14.7	97,976
Lockheed 1649 Constellat'n	A-IV	89		45.7	35.4	7.1	72,575
Boeing C97 Stratocruiser	B-IV	105		43.1	33.6	11.7	66,134
Bristol Brittania 300/310	B-IV	117		43.4	37.9	11.4	83,915
Ilyushin Il-18	B-IV	103		37.4	35.9	10.1	61,072
Ilyushin Il-76	B-IV	119		50.5	46.6	14.8	170,000
Lockheed 1049 Constellat'n	B-IV	113		37.5	34.6	7.6	62,369
Lockheed 749 Constellat'n	B-IV	93		37.5	29.0	6.8	48,534
MDC-DC-7	B-IV	110		38.9	34.2	9.7	64,864
Vickers Vanguard 950	B-IV	119		36.0	37.5	10.6	66,451
Aerospatiale C 160 Trans.	C-IV	124		40.0	32.4	11.8	49,258
Airbus A-300-600	C-IV	135		44.8	54.1	16.7	165,000
Airbus A-300-B4	C-IV	132		44.8	53.5	16.9	150,003
Airbus A-310-300	C-IV	125		43.9	46.7	15.9	150,000
Antonov AN-10	C-IV	126		38.0	37.0	9.8	55,111
Antonov AN-12	C-IV	127		38.0	33.2	10.5	55,111
Boeing 707-100	C-IV	139		39.9	44.2	12.7	116,727
Boeing 707-320	C-IV	139		43.4	46.6	12.9	141,521
Boeing 707-320B	C-IV	136		44.4	46.6	12.8	152,679
Boeing 707-420	C-IV	132		43.4	46.6	12.9	141,521
Boeing 720	C-IV	133		39.9	41.5	12.6	104,009
Boeing 720B	C-IV	137		39.9	41.7	12.6	106,277
Boeing 757	C-IV	135		38.0	47.3	13.7	115,666
Boeing 767-200	C-IV	130		47.6	48.5	16.1	142,882
Boeing 767-300	C-IV	130		47.6	55.0	16.0	158,757
Boeing E-3	C-IV	137		44.5	46.6	12.8	147,418
Canadair CL-44	C-IV	123		43.4	41.7	11.7	95,254
Dassault 1150 Atlantic	C-IV	130	*	37.4	31.8	11.3	45,359
Lockheed 100-20 Hercules	C-IV	137		40.4	32.3	12.0	70,307
Lockheed 100-30 Hercules	C-IV	129		40.4	34.4	11.9	70,307
Lockheed 1011-1	C-IV	138		47.3	54.2	17.0	195,045
Lockheed 1011-100	C-IV	140		47.3	54.2	17.0	211,374
Lockheed 1011-200	C-IV	140		47.3	54.2	17.0	211,374
Lockheed 1011-600	C-IV	140	*	43.5	43.0	16.2	119,748
Lockheed 400	C-IV	121	*	36.5	29.8	11.6	38,102
Lockheed C-141A Starlifter	C-IV	129		48.7	44.2	12.0	143,607
Lockheed C-141B Starlifter	C-IV	129		48.7	51.3	12.0	155,582
Marshall (Shorts) Belfast	C-IV	126		48.4	41.6	14.3	104,326
MDC-DC-10-10	C-IV	136		47.3	55.6	17.8	200,941
MDC-DC-8-10	C-IV	131		43.4	46.0	13.2	125,191
MDC-DC-8-20/30/40	C-IV	133		43.4	46.0	13.2	142,882
MDC-DC-8-50	C-IV	137		43.4	46.0	13.2	147,418
MDC-DC-8-62	C-IV	124		45.2	48.0	13.2	158,757
Tupolev TU-114	C-IV	132	*	51.1	54.1	15.2	164,028
Vickers VC-10-1100	C-IV	128		44.6	48.4	12.0	141,521
Vickers VC-10-1150	C-IV	138		44.6	52.3	12.0	151,999
Boeing 707-200	D-IV	145		39.9	44.2	12.7	116,727
General Dynamics 880	D-IV	155		36.6	39.4	11.0	87,770
General Dynamics 990	D-IV	156		36.6	42.4	12.0	115,666

Aircraft	Airport Reference Code	Appch Speed Knots		Wingspan Meters	Length Meters	Tail Height Meters	Maximum Takeoff Kg
Ilyushin Il-62	D-IV	152		43.2	53.1	12.3	164,999
Ilyushin Il-86	D-IV	141		48.1	59.5	15.8	205,999
Lockheed 1011-250	D-IV	144		47.3	54.2	17.0	224,982
Lockheed 1011-500	D-IV	144		47.3	50.0	17.0	224,982
Lockheed 1011-500 Ex. Wing	D-IV	148		50.1	50.0	17.0	224,982
MDC-DC-10-30	D-IV	151		50.4	55.4	17.9	267,619
MDC-DC-10-40	D-IV	145		50.4	55.6	17.9	251,744
MDC-DC-8-61	D-IV	142		43.4	57.1	13.1	147,418
MDC-DC-8-63	D-IV	147		45.2	57.1	13.1	161,025
MDC-MD-11	D-IV	155		51.8	61.4	17.6	273,289
Rockwell B-1	D-IV	165	*	41.8	44.8	10.4	216,364
Tupolev TU-154	D-IV	145		37.6	47.9	11.4	97,999
Antonov AN-22	C-V	140	*	64.3	50.9	12.6	226,796
Boeing 747-SP	C-V	140		59.6	56.3	20.1	315,700
MDC-C-133	C-V	128		54.8	48.0	14.7	136,078
Boeing 747-100	D-V	152		59.6	70.7	19.6	272,155
Boeing 747-200	D-V	152		59.6	70.7	19.7	377,842
Boeing 747-300SR	D-V	141		59.6	70.7	19.6	272,155
Boeing 747-400	D-V	154		64.9	70.7	19.6	394,625
Boeing 777-200	D-V	145		60.9	63.7	18.8	286,900
Boeing 777-300	D-V	145		60.9	73.9	18.8	299,370
Boeing B-52	D-V	141	*	56.4	48.0	12.4	221,353
Boeing E-4 (747-200)	D-V	152		59.6	70.7	19.7	377,842
Antonov AN-124	C-VI	124		70.7	68.0	20.2	362,874
Lockheed C-5B Galaxy	C-VI	135		67.9	75.5	19.8	379,657

* Approach speeds estimated.

Appendix 14. DECLARED DISTANCES

1. APPLICATION. The use of declared distances for airport design shall be limited to cases of existing constrained airports where it is impracticable to provide the runway safety area (RSA), the runway object free area (ROFA), or the runway protection zone (RPZ) in accordance with the design standards in chapters 2 and 3.

a. This appendix, by treating the airplane's runway performance distances independently, provides an alternative airport design methodology by declaring distances to satisfy the airplane's takeoff run, takeoff distance, accelerate-stop distance, and landing distance requirements. The declared distances are takeoff run available (TORA), takeoff distance available (TODA), accelerate-stop distance available (ASDA), and landing distance available (LDA) which when treated independently may include clearway and stopway and may limit runway use. This alternative design methodology may affect the beginning and ending of the RSA, ROFA, RPZ, and primary surface.

b. Where declared distances differ, the primary surface extends 200 feet (60 m) beyond each end of the runway or the far end of each TODA whichever is further to protect departures to the extent of the 14 CFR Part 77 approach surface for that runway end i.e. 20:1, 34:1, and 50:1 originating at or beyond the end of TODA.

2. BACKGROUND. In applying declared distances in airport design, it is helpful to understand the relationship between airplane certification, aircraft operating rules, airport data, and airport design.

a. Airplane certification provides the airplane's performance distances. The performance speeds, e.g., V_1, takeoff decision speed, V_{LOF}, lift-off speed, V_2, takeoff safety speed, V_{SO}, stalling speed or the minimum steady flight speed in the landing configuration, and the following distances to achieve or decelerate from these speeds are established by the manufacturer and confirmed during certification testing for varying climatological conditions, operating weights, etc.

(1) Takeoff run - the distance to accelerate from brake release to lift-off, plus safety factors.

(2) Takeoff distance - the distance to accelerate from brake release past lift-off to start of takeoff climb, plus safety factors.

(3) Accelerate-stop distance - the distance to accelerate from brake release to V_1 and then decelerate to a stop, plus safety factors.

(4) Landing distance - the distance from the threshold to complete the approach, touchdown, and decelerate to a stop, plus safety factors.

b. Aircraft operating rules provide a minimum acceptable level of safety by controlling the airplane maximum operating weights by limiting the airplane's performance distances as follows:

(1) Takeoff run shall not exceed the length of runway.

(2) Takeoff distance shall not exceed the length of runway plus clearway.

(3) Accelerate-stop distance shall not exceed the length of runway plus stopway.

(4) Landing distance shall not exceed the length of runway.

c. Airport data provides the runway length and/or the following declared distance information for calculating maximum operating weights and/or operating capability.

(1) Takeoff run available (TORA) - the length of runway declared available and suitable for satisfying takeoff run requirements.

(2) Takeoff distance available (TODA) - the TORA plus the length of any remaining runway or clearway beyond the far end of the TORA available for satisfying takeoff distance requirements. The usable TODA length is controlled by obstacles present in the departure area vis-a-vis aircraft performance. As such, the usable TODA length is determined by the aircraft operator before each takeoff and requires knowledge of the location of each controlling obstacle in the departure area. Extending the usable TODA lengths requires the removal of existing objects limiting the usable TODA lengths.

(3) Accelerate-stop distance available (ASDA) - the length of runway plus stopway declared available and suitable for satisfying accelerate-stop distance requirements.

(4) Landing distance available (LDA) - the length of runway declared available and suitable for satisfying landing distance requirements.

3. FAA APPROVAL FOR APPLYING DECLARED DISTANCES IN AIRPORT DESIGN. The application of declared distances at a specific location requires prior FAA approval on a case-by-case basis. Approval is reflected on the FAA-approved Airport Layout Plan.

4. RUNWAY SAFETY AREA (RSA) AND RUNWAY OBJECT FREE AREA (ROFA) LENGTHS. The standard RSA length P in the following paragraphs is the length specified in tables 3-1, 3-2, and 3-3 for the RSA length beyond the runway ends. The standard ROFA length R in the following paragraphs is the length specified in tables 3-1, 3-2, and 3-3 for the ROFA length beyond the runway ends. The RSA and the ROFA shall extend for the full length of the runway plus the greater of the following lengths beyond the runway ends for takeoff and landing in both directions.

a. For takeoff.

(1) At the start of takeoff end of runway. The RSA and the ROFA need to extend behind the start of takeoff to continue the entrance taxiway safety area and taxiway object free area and/or provide an area for jet blast protection. The portion of runway behind the start of takeoff is unavailable and/or unsuitable for takeoff run, takeoff distance, and accelerate-stop distance computations.

(2) At the far end of runway with stopway. The RSA shall extend P and the ROFA shall extend R beyond the far end of stopway.

(3) At the far end of runway without stopway. The RSA shall extend P and the ROFA shall extend R beyond the far end of ASDA. The portion of runway beyond the ASDA is unavailable and/or unsuitable for accelerate-stop distance computations.

b. For landing.

(1) At the approach end of runway. The RSA shall extend P and the ROFA shall extend R before the threshold. The portion of runway behind the threshold is unavailable and/or unsuitable for landing distance computations.

(2) At the rollout end of runway. The RSA shall extend P and the ROFA shall extend R beyond the rollout end of LDA. The portion of runway beyond the LDA is unavailable and/or unsuitable for landing distance computations.

5. RUNWAY PROTECTION ZONE (RPZ) LOCATION AND SIZE. The RPZ function may be fulfilled by the RPZ beginning at a location other than 200 feet (60 m) beyond the end of the runway. When an RPZ begins at a location other than 200 feet (60 m) beyond the end of runway, two RPZs are required, i.e, a departure RPZ and an approach RPZ. The two RPZs normally overlap.

a. Approach RPZ. The approach RPZ shall begin 200 feet (60 m) before the threshold. Table 2-4 contains standard dimensions for approach RPZs. The portion of runway behind the threshold is unavailable and/or unsuitable for landing distance computations.

b. Departure RPZ. The departure RPZ shall begin 200 feet (60 m) beyond the far end of TORA. The portion of runway beyond the TORA is unavailable and/or unsuitable for takeoff run computations. The standard dimensions for departure RPZs are:

(1) Starting 200 feet (60 m) beyond the far end of TORA, 1,000 feet (300 m) long, 250 feet (75 m) wide, and at the far end of RPZ 450 feet (135 m) wide--for runways serving only small airplanes in Aircraft Approach Categories A and B.

(2) Starting 200 feet (60 m) beyond the far end of TORA, 1,000 feet (300 m) long, 500 feet (150 m) wide, and at the far end of RPZ 700 feet (210 m) wide--for runways serving large airplanes in Aircraft Approach Categories A and B.

(3) Starting 200 feet (60 m) beyond the far end of TORA, 1,700 feet (510 m) long, 500 feet (150 m) wide, and at the far end of RPZ 1,010 feet (303 m) wide--for runways serving Aircraft Approach Categories C and D.

6. CLEARWAY LOCATION. The clearway is located at the far end of TORA. The portion of runway extending into the clearway is unavailable and\or unsuitable for takeoff run and takeoff distance computations.

7. NOTIFICATION. The clearway and stopway lengths and the following declared distances shall be provided in the Airport/Facility Directory (and in the Aeronautical Information Publication (AIP), for international airports) for each operational direction:

a. The TORA -- the length of the runway less any length of runway unavailable and/or unsuitable for takeoff run computations. See figure A14-1.

b. The TODA -- the TORA plus the length of any remaining runway and/or clearway beyond the far end of the TORA. See figure A14-2.

c. The ASDA -- the length of the runway plus the length of any stopway beyond the far end of the runway less any length of runway and/or stopway unavailable and/or unsuitable for accelerate-stop distance computations. See figure A14-3.

d. The LDA -- the length of the runway less any length of runway unavailable and/or unsuitable for landing distance computations. See figure A14-4. **Note:** When the threshold is sited for small airplanes (see appendix 2, paragraphs 5a and 5b), report LDA as "LDA for airplanes of 12,500 pounds (5 700 kg) or less maximum certificated takeoff weight."

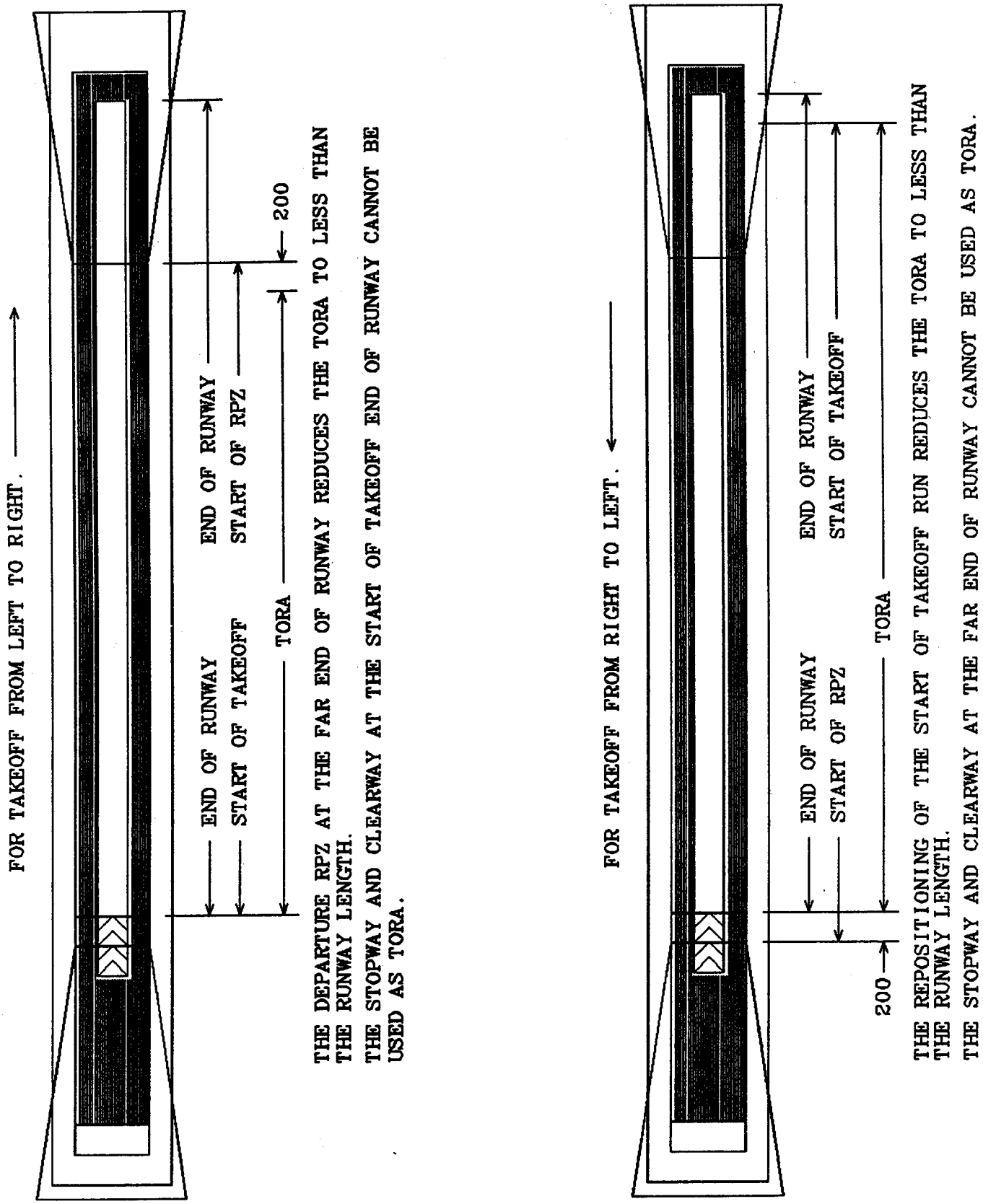

Figure A14-1. Takeoff run available (TORA)

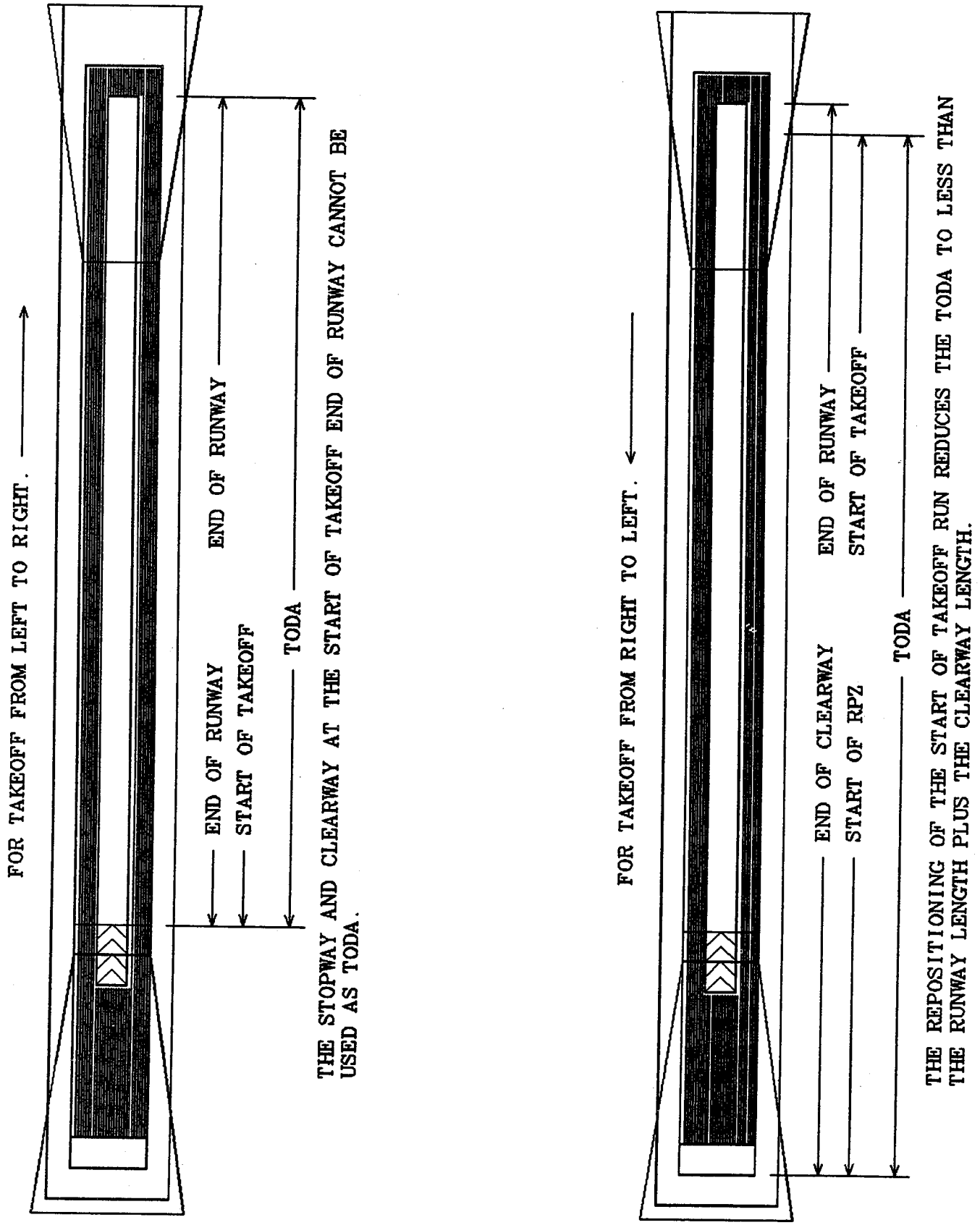

Figure A14-2. Takeoff distance available (TODA)

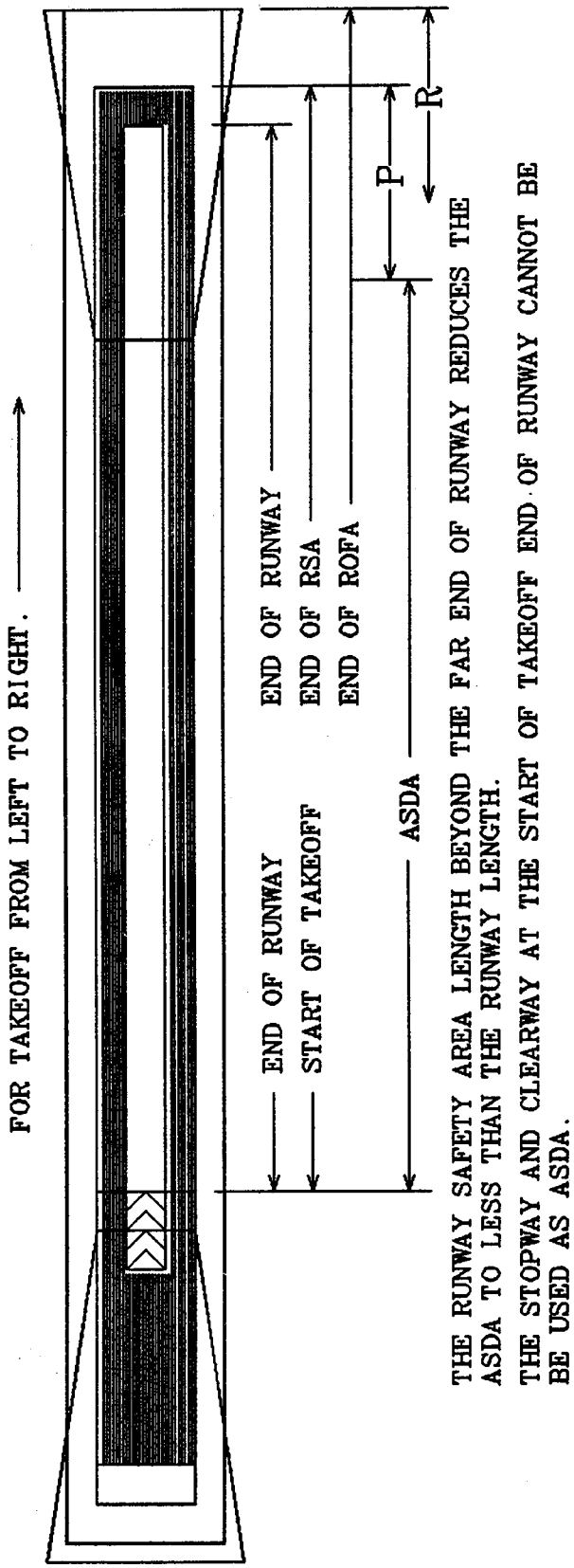

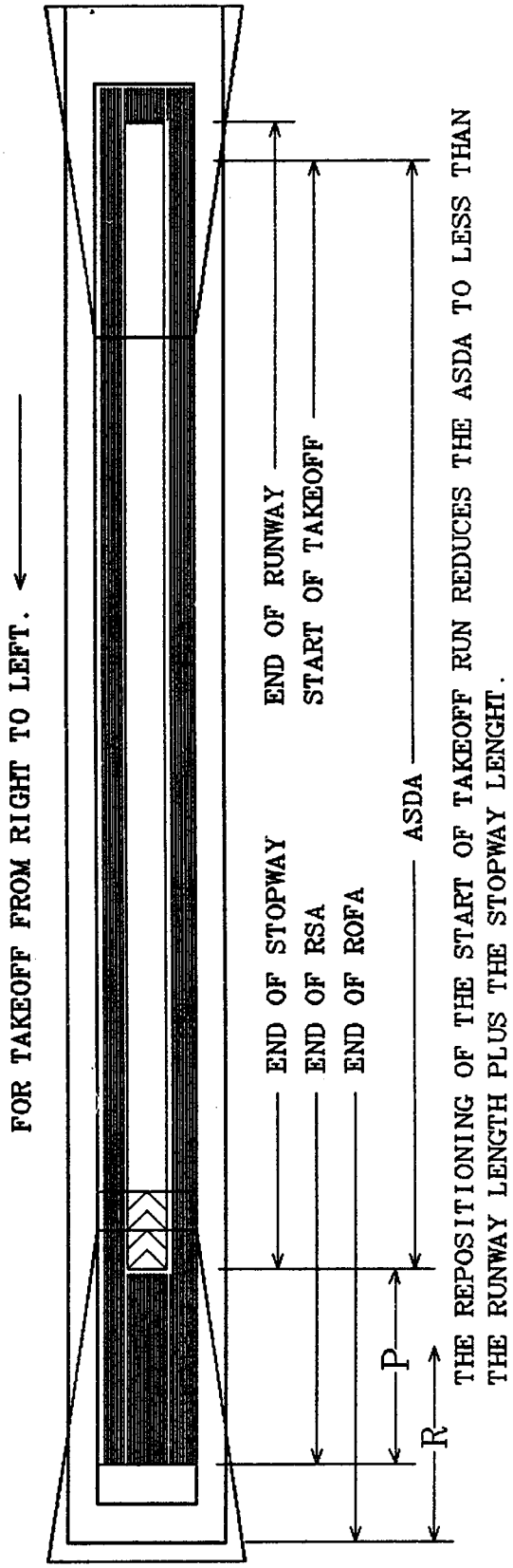

Figure A14-3. Accelerate-stop distance available (ASDA)

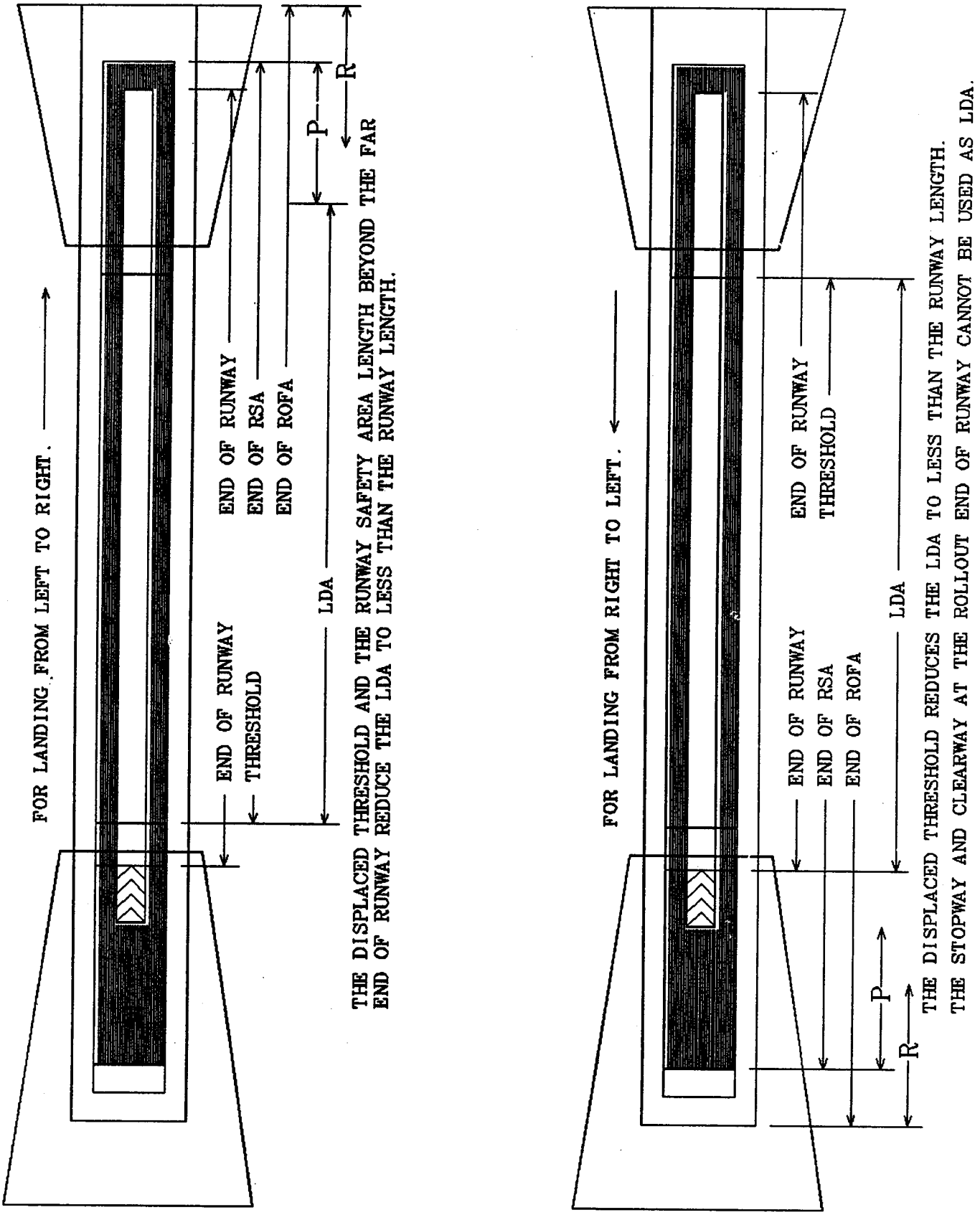

Figure A14-4. Landing distance available (LDA)

Example:

The following situation is for a runway which is to be extended to 7000 feet. The threshold at the 9 end is displaced 420 feet for obstructions in the approach. The runway safety area at the 27 end can only be extended to 375 feet beyond the runway end. By entering the following airport data into the Airport Design (for microcomputers) program, we find that the runway safety area at the Runway 27 end is 625 feet less than standard.

AIRPORT DESIGN AIRPLANE AND RUNWAY DATA

Aircraft Approach Categories C and D
Airplane Design Group III
Precision Instrument Runway

Runway 9/27 length	7000 feet
Stopway length at the far end of Runway 9	0 feet
Stopway length at the far end of Runway 27	0 feet
Clearway length at the far end of Runway 9	375 feet
Clearway length at the far end of Runway 27	0 feet
Runway safety area length beyond the far end of Runway 9	375 feet
Runway safety area length beyond the far end of Runway 27	1000 feet
Object free area length beyond the far end of Runway 9	375 feet
Object free area length beyond the far end of Runway 27	1000 feet
Distance from approach end of Runway 9 to the threshold	420 feet
Distance from approach end of Runway 27 to the threshold	0 feet
Distance from start end of Runway 9 to the start of takeoff	0 feet
Distance from start end of Runway 27 to the start of takeoff	0 feet
Distance from far end of Runway 9 to the start of clearway	0 feet
Distance from far end of Runway 27 to the start of clearway	0 feet
Distance from far end of Runway 9 to the start of departure RPZ	200 feet
Distance from far end of Runway 27 to the start of departure RPZ	200 feet

DECLARED DISTANCES

	Runway 9 (feet)	Runway 27 (feet)
Takeoff run available (TORA)	7000	7000
Takeoff distance available (TODA)	7375	7000
Accelerate-stop distance available (ASDA)	6375	7000
Landing distance available (LDA)	5955	7000

The runway safety area before RW 27 threshold is 625 feet less than standard.
The object free area before RW 27 threshold is 625 feet less than standard.

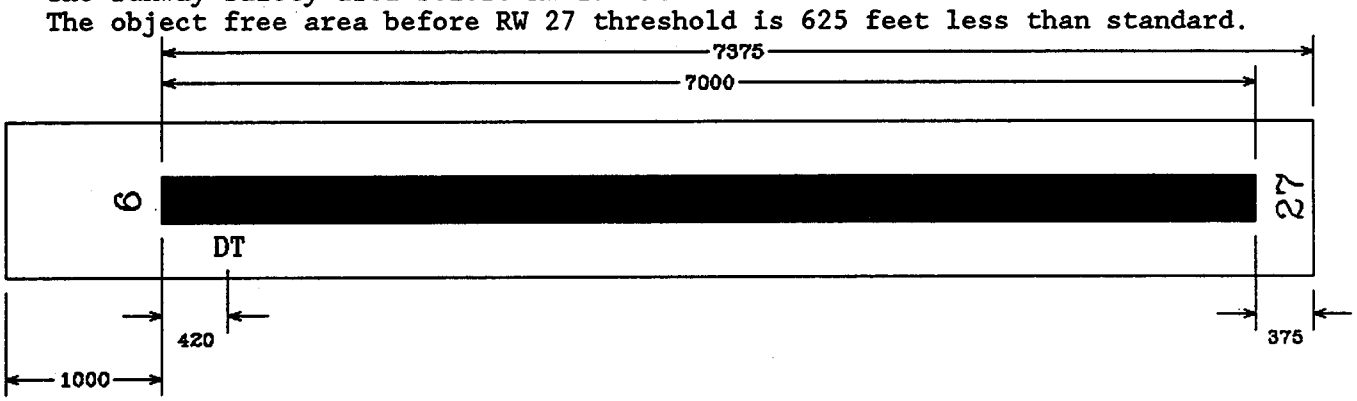

By displacing the threshold at the 27 end 625 feet and providing declared distances, the runway safety area length and runway object free area length standards can be satisfied. See figure A14-6.

Figure A14-5. Example of a runway extended to 7000 feet

AIRPORT DESIGN AIRPLANE AND RUNWAY DATA

Aircraft Approach Categories C and D
Airplane Design Group III
Precision Instrument Runway

Runway 9/27 length	7000 feet
Stopway length at the far end of Runway 9	0 feet
Stopway length at the far end of Runway 27	0 feet
Clearway length at the far end of Runway 9	375 feet
Clearway length at the far end of Runway 27	0 feet
Runway safety area length beyond the far end of Runway 9	375 feet
Runway safety area length beyond the far end of Runway 27	1000 feet
Object free area length beyond the far end of Runway 9	375 feet
Object free area length beyond the far end of Runway 27	1000 feet
Distance from approach end of Runway 9 to the threshold	420 feet
Distance from approach end of Runway 27 to the threshold	625 feet
Distance from start end of Runway 9 to the start of takeoff	0 feet
Distance from start end of Runway 27 to the start of takeoff	0 feet
Distance from far end of Runway 9 to the start of clearway	0 feet
Distance from far end of Runway 27 to the start of clearway	0 feet
Distance from far end of Runway 9 to the start of departure RPZ	200 feet
Distance from far end of Runway 27 to the start of departure RPZ	200 feet

DECLARED DISTANCES

	Runway 9 (feet)	Runway 27 (feet)
Takeoff run available (TORA)	7000	7000
Takeoff distance available (TODA)	7375	7000
Accelerate-stop distance available (ASDA)	6375	7000
Landing distance available (LDA)	5955	6375

RSA length limits RW 9 ASDA
ROFA length limits RW 9 ASDA
RSA length limits RW 9 LDA
ROFA length limits RW 9 LDA

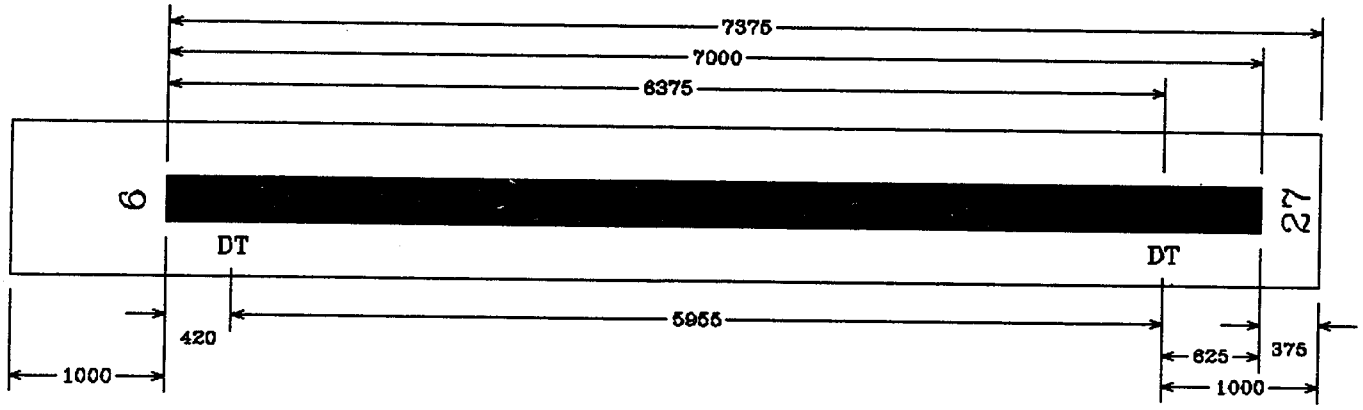

Figure A14-6. Example of a runway with threshold displaced for runway safety area

Appendix 15. TRANSFER OF ELECTRONIC DATA

1. **INTRODUCTION**. This appendix provides guidance for the preparation of Computer Aided Design and Drafting (CADD) drawings, databases, and photogrammetric data electronic files for electronic data transfer between the FAA, airport sponsors, and consultants. The objective of this guidance is to establish software-independent standards to encourage an open and free exchange of airport design related data without undue burden on airport sponsors or consultants. Reference to proprietary products is for information only and should not be considered as an endorsement or an intent to create a de facto standard.

2. **BACKGROUND**. Electronic data is used by the FAA, airport sponsors, and airport consultants for conducting airspace reviews, for developing Airport Layout Plans (ALPs), and for other airport data recording activities.

a. This data should be entered only once. Once entered, it should be reusable for multiple applications. Reasons historically advanced for reentering data include:

(1) **Inaccessibility**. *We don't have the data in our data bases. We can't get it in the right format for entry into our data base by scanning.* Most data in FAA, airport sponsors, and airport consultants data bases is or can be made available. Contact the sources.

(2) **Insufficient Deliverable Information**. *We can't read the data files. We don't have sufficient descriptive information for using the files.* Paragraph 9 provides guidance on the information about the deliverables, medium, and data files that should accompany the deliverables. Provide this information with each deliverable.

(3) **Nonstandard Features and Objects Code**. *We can't merge the data into our data base. The features and objects codes are incompatible.* Paragraph 8 provides the FAA standard code. It should be used to the extent practicable.

(4) **Untranslatable Entities**. *We can't translate the files. We lost most of the data in transition.* Paragraph 5 provides guidance on Autodesk AutoCAD DXF and Intergraph IGDS/MicroStation entities that traditionally have not translated well. Avoid these entities to the extent practicable.

b. The FAA obtains data from various sources and stores the data in a neutral database for FAA use and electronic transfer. Airport sponsors and consultants normally obtain and transfer electronic data in DXF or IGDS/MicroStation CADD files. The limitations in translation from one CADD format to another CADD format and from a CADD format to a neutral format, have restricted the useful data that could have been transferred between the FAA, airport sponsors, and consultants.

c. Successful transfer of data requires that the data format be acceptable for the recipient's use. To be able to use data provided by airport sponsors and consultants, the FAA has developed capability to translate DXF files to a database format and a limited capability with IGDS/MicroStation files. To be imported successfully into database, the data must be provided in a real coordinate system, both horizontal and vertical.

d. Translators available within the FAA will accept files in the DXF, the IGDS/MicroStation, or a format translatable to a database file format. Further, the FAA will provide this stored data to airport sponsors and consultants.

3. **DEFINITIONS**. As used in this publication:

a. The "classic" Airport Layout Plan (ALP) is the drawing on paper or vellum of an airport showing the layout of existing and proposed airport facilities. This drawing will have approval signatures affixed in the legend.

b. The "modern" Airport Layout Plan (ALP) is the electronic database of an airport containing the geographical data of existing and proposed airport facilities which can be analyzed with standard database routines, retrieved into reports, and displayed graphically to show the layout of existing and proposed airport facilities. This data base does not reflect approval signatures.

c. The "classic" satisfies the ALP approval and record keeping processes but not the requirements for electronic data transfer. To achieve satisfactory electronic data transfer we must go "modern".

4. **APPLICATION**. The FAA recognizes the use of CADD systems within the aviation community and the need for data transfer utilizing these systems.

a. Further, the FAA desires to promote on-going data transfer with airport sponsors and consultants.

This AC, while not representing mandatory requirements, offers guidelines to facilitate the translation, conversion, and transfer of data.

b. To better manipulate the data, the FAA requests, except possibly for construction drawings, that the information be submitted in a set of files. The FAA uses this set of files to categorize data and facilitate data input into a database or drawing file for conversion into a database. The following are the recommended categories for the sets of files:

(1) Ground features and objects;

(2) Above-ground features and objects;

(3) Treetops;

(4) Contours;

(5) Control points;

(6) Text; and

(7) Listing.

5. CADD FILE DELIVERABLES. Drawings created in AutoCAD DXF and Intergraph IGDS/MicroStation can be converted as outlined below. This includes any symbols or standards that are required for the project. To reduce problems in translation, airport sponsors and consultants can prepare a sample typical file and either check or have the potential recipient of the deliverables check for translation interface problems. If checked by the FAA, feasible alternatives to eliminate the problems will be suggested.

a. DXF Format (AutoCAD). DXF drawings can be translated to a database format with FAA developed translation software. Since AutoCAD is the dominant software which uses DXF format, the following information is provided for users of AutoCAD.

(1) AutoCAD Version 12. The translation software owned by the FAA accepts AutoCAD Version 12 and below.

(2) Entities to avoid. Avoid the following entities since they traditionally have not translated well:

(a) Doughnuts, Solids, and Tracers;

(b) Shapes;

(c) Text Justifications of A (align), F (fit), and M (middle);

(d) Plines;

(e) Point entities;

(f) Custom Fonts; and

(g) Special characters such as %%d, &&p, %%c, and %%%.

(3) Significant Digits. If DXFOUT is used, select 6 decimal places.

(4) Layers. FAA has the capability to map AutoCAD layers. However, the FAA translation software is limited to layer number 1 through 249. FAA desires to receive the data categorized by layers to facilitate the conversion. Paragraph 8 provides a list of element categories used to differentiate the information by relating the features or objects with a number and a description. The number can be referenced to a layer number and the description to a layer name if so used by the provider.

(5) Line Weights. The provider should assign the line weights to the AutoCAD drawings at plot time based on the AutoCAD color attribute. FAA requests that the provider put together a standard for color to pen assignment for submission to the FAA one time prior to the first delivery and adhere to this standard.

(6) Text. Only two text fonts can be used.

(a) Font TXT with Style TXT.

(b) Font SIMPLEX with STYLE SIMPLEX.

When text entities are entered, only baseline justification (left, center, and right) should be used. Aligned text (A), Fitted (F), or Middle text (M) should not be used. These justifications cause translation problems.

(7) Dimensions. In order to conform to translation dimensioning requirements, the provider should set the following dimensioning variables as shown:

(a) DIMTAD to ON;

(b) DINTIH to OFF;

(c) DIMTOH to OFF;

(d) DINBLK to NONE; and

(e) DIMTSZ to appropriate size of tick mark.

(8) Nested Blocks and XREF Files. The following items do not translate well; therefore, the consultants should do the following:

(a) Nested blocks should not be used.

(b) External reference files (XREF) are output to the DXF file by AutoCad as special blocks. If XREFs are used, special attention is required to XREFed files to avoid nested blocks. XREF files should be made a permanent part of the drawing file with XREF BIND, prior to exporting the file to DXF. An alternative would be to detach the XREF file, attach the file as a standard block and explode the newly attached block.

(c) All drawings should be created using model space.

(9) Filename. The provider must submit with each electronic deliverable an index relating filenames to actual drawing numbers.

(10) Translation Setup Checklist. The following actions are required before delivery:

(a) Remove all construction entities/layers and other unnecessary data from the drawing file (PURGE command).

(b) Produce file/layer naming index.

b. IGDS (Intergraph including MicroStation). The following is recommended for organizing Intergraph IGDS or MicroStation drawings for proper translation.

(1) Entities to avoid. Avoid the following entities since they traditionally have not translated well:

(a) Symbols. These are entities which are entered as a single text character with special IGDS fonts 85 through 126. Because these are stored simply as text in the IGDS file, they translate only as text. The provider should instead use cells in all cases where symbols might otherwise be used.

(b) Infinite Lines. Most translation does not support infinite lines. Use normal fixed-length line segments.

(c) Stacked Fractions.

(d) Custom Line Fonts.

(2) Coordinate Setup. Intergraph uses an integer-based method of string coordinate data based on user-defined "Working Units" or "units of resolution". This limits the range of X and Y coordinates which can be stored in the "Design Plane". The provider must define the Master and Sub Unit readouts to FT (') for Master, and IN (") for Sub Units, as appropriate. Unless these readouts and the Working Units are correctly defined, translation software cannot determine the true X Y coordinates representation.

(3) Standard Symbols. All of the standard symbols that appear in the IGDS drawings should be created and inserted as Cells.

(4) Text. The provider should only use "Font 50" font.

(5) Dimensions. Since IGDS stores Dimensions as a text and lines, translation of IGDS Dimensions will not be a problem. The provider can simply select from the menu the appropriate IGDS dimensioning commands which produce the AEC dimensioning with oblique strokes (tick marks).

(6) Filename. The provider must submit with each electronic deliverable an index relating filenames to actual drawing numbers.

(7) Reference Files. Most translation software does not support the concept of reference files. All reference files should be merged into the design file prior to submission. This can be accomplish by the following command sequence.

(a) Turn OFF all levels of the design file.

(b) Turn Locate ON for all reference files.

(c) Place CLIP fence around reference files.

(d) COPY fence into design file with zero displacement.

(e) DETACH all reference files.

(f) Turn ON all levels of the design file.

(8) Complex Elements. Complex elements 2, 7, 12, and 14 do not translate consistently. Drop these elements.

c. Application Programs. If the provider chooses to use any special application program, it is recommended that the program be customized to conform to the above translation guidelines. If the application program does not permit customization, the provider will have to review the Layers, Colors, Line Weights, and Text Styles/Fonts that the application program uses and develop a mapping strategy to produce database files. The provider will also need to check that the application program does not use any of the problem entities listed in "Entities to avoid" subsection above.

6. DATABASES DELIVERABLES. FAA can accept database information in ASCII format with a separator character between each field within each record. Any record length can be accepted as long as it is stated on the media and the record structures with field definitions are provided as part of the deliverables.

7. PHOTOGRAMMETRY DELIVERABLES. Electronic deliverables from a photogrammetric survey comprise a set of files depicting the geographical outlines, features, and objects of the photographed areas. These files are to present the raw information in a descriptive manner, ASCII format, in lieu of drawing-type binary data. To differentiate between life-cycle state of the data, such as "existing" or "proposed," the data should be provided in separate file sets and so noted. If separate file sets are not feasible, linetype and/or symbol designators should be specifically assigned for the life-cycle state and so noted in the listing file."

a. Subject to survey requirements, the recommended set of files is as follows:

(1) Ground Features and Objects. This file includes all features and objects found at ground elevation, such as roads, runways, ridges, peaks, valleys, catch-basins, tree/shrub outlines, individual elevation points, foundations (FAA and non-FAA), etc..

(2) Above-Ground Features and Objects. This file includes all data which is above ground elevation, except for tree data. The data includes house outlines, roof peak outlines, tanks, fences, chimneys, air vents, poles, FAA and non-FAA facilities such as NAVAIDS, and other elements where the elevation component is above the surrounding terrain.

(3) Treetops. This file includes representative treetop points within forested areas defined by tree outline, individual trees, shrubs, and associated greenery.

(4) Contours. This file includes all major and minor contour features.

(5) Control Points. This file includes the control survey points used in the photogrammetric interpretation.

(6) Text. If available, this file includes text information of a map product.

(7) Listing. This file is a listing defining the line type or string and symbol numbers used which should correspond to the respective FAA codes as outlined in paragraph 8.

b. The preferred format of these files is the standard plot file, such as Calcomp or HP, generated from the digitizing process to be used as input to a plotter system, or an output listing file produced by the PTLIST program from a KORK System, or KLT/ATLAS System, or equivalent.

c. Typically, this plot file contains mapping parameters, such as scale and rotation, and defines the features/outlines by line type or string numbers, and objects as symbol numbers with their respective horizontal coordinates and elevation. Certain rules must be followed in order to assure the integrity of data during conversion and compilation on the CADD system. These rules are as follows:

(1) Each feature/outline, designated as a specific line type, and object, designated as a specific symbol, must be enclosed within a set of commands or ranges which define the start and continuing or end coordinates of the items. Typical set commands used in plot files are "pen up or start" to define the start and "pen down or quit" to define continuing and end point. A change in line type or symbol is permitted only with a "pen up" type command to flag the change.

(2) Coordinates are to be based on the respective State Plane Grid Projections with elevation based on mean sea level datum, either NAD-27 or NAD-83.

(3) Accuracy level of data is determined by the scale of the map being produced for the provider as part of the product, usually ± 1 foot in horizontal control with ± 6 inches in elevation.

(4) For tree/shrub outline, the horizontal coordinates shall be of the extreme edge point with the corresponding ground elevation (i.e. "drip line").

(5) For above ground data such as a building, the data shall define the perimeter of the feature. For roof peaks, the data shall define the peak line and orientation.

(6) For above ground data where the items lean from vertical, the horizontal coordinates shall be of the top of the item and the elevation shall be of the top,

(7) Additional ground spots with elevations should be included in the Ground Features and Objects file to define the ground elevation surrounding above ground data such as buildings, tanks, fences. etc.. These points, being ground reference, are not required to have the same horizontal coordinates as the above ground data but should be in as close proximity to the item as feasible.

(8) For ground and above ground data defining NAVAIDS and/or visual aids facilities (SYMBOLS above 135), the horizontal coordinates shall represent the geographic centroid of the facility with the elevation of the respective foundation.

8. FEATURES AND OBJECTS CODE. The following codes associate information from photogrammetry, database, and drawings. These codes are specific in order to develop a database with multiple applications. FAA requests, if possible, that these codes be incorporated in the project. However, FAA has developed an internal translator to convert a provider's listing to the FAA's listing.

a. The designator code LTP refers to Line type or a feature comprised of multi-points, whereas SYM refers to Symbols, Markers, or objects of a single point. The associated number represents a unique code and can also represent layers. The last column provides the description of the feature or object, and can be used for layer name convention.

b. The respective FAA codes are as follows:

LTP	1	PAVED ROAD
LTP	2	CURBED ROAD
LTP	3	FOOT PATH
LTP	4	PAVED DRIVEWAY
LTP	5	UNPAVED DRIVEWAY
LTP	6	PARKING SPACES
LTP	7	DIRT ROAD
LTP	8	PAVED PARKINGS
LTP	9	UNPAVED PARKINGS
LTP	10	MOTORCYCLE TRAIL
LTP	11	RAMPS/DOCKS
LTP	12	DEBRIS/RUINS
LTP	13	PATIO
LTP	14	DECK
LTP	15	ACTIVE RAILROAD
LTP	16	INACTIVE RAILROAD
LTP	20	SIDEWALKS
LTP	21	CONCRETE SLABS
LTP	22	PAVED SHOULDERS
LTP	23	UNPAVED SHOULDERS
LTP	24	TOWERS
LTP	25	LARGE SIGNS
LTP	26	DRAINAGE GATE
LTP	27	STEPS
LTP	28	BLEACHERS
LTP	36	BUILDING U/C
LTP	37	BUILDING
LTP	38	CROSS-HATCHING
LTP	39	BLDG FOUNDATION
LTP	40	HOUSE BLD
LTP	41	EQUIPMENT SHELTER
LTP	56	FUEL TANK
LTP	57	PIPELINE
LTP	58	TANK OR SILO
LTP	59	FUEL STORAGE BLDG
LTP	60	WOODEN FENCE
LTP	61	OBSCURED FENCE
LTP	62	BOULDERS
LTP	63	RECREATION EQUIP
LTP	64	STANDING WALL
LTP	65	METAL FENCE
LTP	66	STONE WALL
LTP	67	RETAINING WALL
LTP	68	GUARD RAIL
LTP	69	ROCK FACE
LTP	70	ROOF PEAK
LTP	71	FOOTBRIDGE
LTP	72	RAILROAD BRIDGE
LTP	73	ROAD/HWAY BRIDGE
LTP	74	RUNWAY CENTERLINE
LTP	75	RUNWAY EDGES
LTP	76	TAXIWAY CENTERLINE
LTP	77	TAXIWAY EDGES
LTP	78	AIRPORT APRONS
LTP	79	AIR. PVMT FILLET
LTP	80	TREE OUTLINE
LTP	81	SCRUB LINE
LTP	82	SHRUBS

LTP	83	GOLF GREENS
LTP	84	SAND TRAPS
LTP	86	HEDGES
LTP	86	ORCHARD
LTP	87	TREE NURSERY
LTP	97	WHARF/PIERS
LTP	98	DAM
LTP	99	CULVERTS
LTP	100	DRAINAGE DITCH
LTP	101	CANAL
LTP	102	STORM DRAIN
LTP	103	CREEK OR STREAM
LTP	104	RIVER
LTP	105	DRY DITCH
LTP	106	POOL
LTP	107	LAKE
LTP	108	SEAWALL
LTP	109	SEASHORE
LTP	110	SWAMP OUTLINE
LTP	120	CONTOUR LINE
LTP	121	INDEX CONTOUR
LTP	122	DEPRESSION CONTOUR
LTP	123	INDEX DEPRSS CONTR
LTP	124	DASHED CONTOUR
LTP	125	DASHED INDEX CONTOUR
LTP	126	DASHED DEPRSS CONTR
LTP	127	DASHED IDX DPS CONTR
LTP	128	RUNWAY NUMBERS
LTP	129	THRESHOLD MARKING
LTP	130	HOLD LINE
SYM	2	HOUSE TOP POINT
SYM	3	ROAD SIGN
SYM	6	TREETOP ELEV
SYM	7	MAIL BOX
SYM	9	FIRE HYDRANT
SYM	10	UNKNOWN OBJECT
SYM	11	SILL ELEV/DTM PTS
SYM	12	CATCH BASIN
SYM	13	MANHOLE
SYM	14	WATER GATE
SYM	15	GAS GATE
SYM	16	DROP INLET
SYM	17	CHIMNEY
SYM	18	AIR VENT
SYM	19	BUTTERFLY VALE
SYM	20	BORING HOLE
SYM	21	PROBE
SYM	22	TOWER SUPPORT
SYM	23	UTILITY POLE
SYM	24	SMALL POLE
SYM	25	AERIAL ANTENNA
SYM	26	LIGHT POLE
SYM	62	SIGN
SYM	81	IND. EVERGREEN
SYM	82	IND. DECIDUOUS TREE
SYM	83	SCRUB
SYM	84	INDIVIDUAL SHRUB
SYM	85	DENSE TREES
SYM	86	INDIVIDUAL TREE
SYM	87	STUMP
SYM	110	MARSH/SWAMPS
SYM	111	RAPIDS
SYM	118	HORIZONTAL POINT
SYM	119	VERTICAL POINT
SYM	121	BOUNDARY CORNER
SYM	122	FLAGPOLE
SYM	123	B-BALL HOOP
SYM	124	RESIDENTIAL LAMP
SYM	125	LAMP POLE
SYM	126	POST
SYM	127	TRAFFIC SIGNAL
SYM	128	PHONE BOOTH
SYM	129	R.R. SIGNAL
SYM	130	POLE
SYM	131	GAS PUMPS
SYM	132	HEAD STONES
SYM	133	ELEC. BOX/A.C.U.
SYM	134	TRAFFIC CNTRL BOX
SYM	135	R.R.SWITCH BOX
SYM	136	WIND CONE
SYM	137	SEGMENTED CIRCLE
SYM	138	T/W EDGE ELEV LT
SYM	139	T/W EDGE INPVT LT
SYM	140	T/W CENTERLINE LT
SYM	141	T/W STOP BAR
SYM	142	R/W EDGE ELEV LT
SYM	143	R/W EDGE INPVT LT
SYM	144	R/W CENTERLINE LT
SYM	145	R/W THLD ELEV LT
SYM	146	R/W THLD INPVT LT
SYM	147	R/W TDZ INPVT LT
SYM	148	R/W HOLD BAR LT
SYM	151	ALS THLD ELEV BAR
SYM	152	ALS THLD INPVT BAR
SYM	153	ALS ELEV LIGHT BAR
SYM	154	ALS INPVT LIGHT BAR
SYM	158	VASI BOXES FDN
SYM	159	REAL LIGHTS FDN
SYM	160	LOCALIZER FDN
SYM	161	G/S ANTENNA FDN
SYM	162	G/S ANTENNA TOP
SYM	163	G/S MONITOR FDN
SYM	164	RVR TOWER CTR PT
SYM	165	VOR CENTER PT
SYM	166	ASR CENTER PT
SYM	167	ODALS
SYM	168	COMPASS CALIBRATION PAD

c. FAA recognizes that, during a project, new features or objects will be recognized. The provider should highlight these new features or objects in the submitted listing so that the FAA can assure capture during translation.

9. MEDIA. FAA can accept electronic deliverables on the following magnetic medium:

a. 5.25 inches, 1.2 MB, AEGIS or UNIX formatted floppy diskettes for reading on a HP/Apollo computer system.

b. 5.25 inch, 1.2 MB, or 3.5 inch, 1.44 MB, MS-DOS Version 3.0 or higher formatted floppy diskettes. Each file should consist of no more than 1 MB of information per file. Multi-files are preferred.

c. 1600 or 6250 BPI, 9 track tape reels, labeled or unlabeled, in ASCII, or EBCDIC. Records shall be 80 to 512 bytes long in no more than 2048 byte blocks written using a copy or equivalent command to produce files to be read on foreign systems. The recommended format for IGDS is 512 bytes record length with 2048 bytes block length.

d. 1/4 inch cartridge tape formatted for reading on a HP/Apollo computer running under the AEGIS or UNIX operating system.

e. In addition, each electronic deliverable shall be accompanied by a legible label affixed to the outside of each magnetic medium's protective case and a document that lists the files contained in that medium. The label shall bear the following:

(1) The name of the sender;

(2) The name of the intended recipient;

(3) A sender-unique identifier or title that can be used to reference the collective contents of the transmittal;

(4) Format descriptions necessary for reading the medium; and

(5) List file of the features and objects contained in the submittal.

(6) The contract or project number and/or name.

10. FAA POINT OF CONTACT. The FAA Airports Regional and/or District Office is the FAA point of contact dealing with the transfer of electronic data.

Appendix 16. NEW INSTRUMENT APPROACH PROCEDURES

1. BACKGROUND. This appendix applies to the establishment of new authorized instrument approach procedures. For purposes of this appendix, an Instrument Approach Procedure (IAP) amendment or the establishment of a Global Positioning System (GPS) instrument procedure "overlaying" an existing authorized instrument procedure does not constitute a new procedure. However, a significant reduction in minima (i.e. ¼ mile reduction in visibility and/or 50 foot reduction in decision altitude or minimum descent altitude) would constitute a new procedure.

a. This appendix identifies airport landing surface requirements to assist airport sponsors in their evaluation and preparation of the airport landing surface to support new instrument approach procedures. It also lists the airport data provided by the procedure sponsor that the FAA needs to conduct the airport airspace analysis specified in FAA Order 7400.2, *Procedures for Handling Airspace Matters*. The airport must be acceptable for IFR operations based on an Airport Airspace Analysis (AAA), under FAA Order 7400.2.

b. FAA Order 8260, *TERPS*, reflects the contents of this appendix as the minimum airport landing surface requirements that must be met prior to the establishment of instrument approach procedures at a public use airport. This order also references other FAA requirements, such as a safety analysis to determine the need for approach lighting and other visual enhancements to mitigate the effects of a difficult approach environment. This is a consideration regardless of whether or not a reduction in approach minimums is desired. Airport sponsors are always encouraged to consider an approach lighting system to enhance the safety of an instrument procedure. In the absence of any identified benefits or safety enhancement from an approach light system, sponsors should at least consider installing lower cost visual guidance aids such as REIL or PAPI.

c. The tables provided in this appendix are for planning purposes only and should be used in conjunction with the rest of the document. All pertinent requirements within this AC and other FAA documents, as well as local siting conditions, ultimately will determine the lowest minimums obtainable.

2. INTRODUCTION. To be authorized a new instrument approach procedure, the runway must have an instrument runway designation. Instrument runways are runway end specific. The runway end designation is based on the findings of an AAA study (Refer to Order 7400.2). In addition, the instrument runway designation for the desired minimums must be depicted on the FAA-approved ALP. If not depicted, a change to the ALP is required. As part of the ALP approval process, the FAA will conduct an AAA study to determine the runway's acceptability for the desired minimums.

3. ACTION. The airport landing surface must meet the standards specified in tables A16-1 A through C, for each specified runway, direction and have adequate airspace to support the instrument approach procedure. When requesting an instrument procedure, the sponsor must specify the runway direction, the desired approach minimums, whether circling approach procedures are desired, and the survey needed to support the procedure. For all obligated National Plan of Integrated Airport Systems (NPIAS) airports, the sponsor must also provide a copy of the FAA-approved ALP showing the instrument procedure(s) requested. An ALP is also recommended for all other airports.

4. DEFINITIONS.

a. Precision Approach. An instrument approach procedure providing course and vertical path guidance conforming to ILS, or MLS, precision system performance standards contained in ICAO annex 10. Table A16-1A defines the requirements for ILS, LAAS, WAAS, MLS, and other precision systems.

b. Approach Procedure with Vertical Guidance (APV). An instrument approach procedure providing course and vertical path guidance that does not conform to ILS or MLS system performance standards contained in ICAO annex 10, or a precision approach system that does not meet TERPS alignment criteria. Table A16-1B defines the requirements for WAAS and authorized barometric VNAV.

c. Nonprecision Approach. An instrument approach procedure providing course guidance without vertical path guidance. Table A16-3C defines the requirements for VOR, NDB, LDA, GPS (TS0-129) or other authorized RNAV system.

Table A16-1A. Precision Instrument Approach Requirements.

Visibility Minimums[1]	<3/4 statute mile	< 1-statute mile
Height Above Touchdown (HAT)[2]	200	
TERPS Glidepath Qualification Surface (GQS)[3]	Table A2-1, Row 7, Criteria, and Appendix 2, par. 5a Clear	
TERPS precision "W" surfaces [4]	Clear	See Note 5
TERPS Paragraph 251	34:1 Clear	20:1 Clear
Precision Obstacle Free Zone (POFZ) 200 x 800[6]	Required	Not Required
Airport Layout Plan[7]	Required	
Minimum Runway Length	4,200 ft (1,280 m) (Paved)	
Runway Markings (See AC 150/5340-1)	Precision	Nonprecision
Holding Position Signs & Markings (See AC 150/5340-1 and AC 150/5340-18)	Precision	Nonprecision
Runway Edge Lights[8]	HIRL / MIRL	
Parallel Taxiway [9]	Required	
Approach Lights[10]	MALSR, SSALR, or ALSF	Recommended
Runway Design Standards; e.g., Obstacle Free Zone (OFZ) [11]	< 3/4-statute mile approach visibility minimums	≥ 3/4-statute mile approach visibility minimums
Threshold Siting Criteria To Be Met [12]	Table A2-1, Row 9, Criteria	Table A2-1, Row 8, Criteria
Survey Required for Lowest Minima	Table A16-2, Row 10, Criteria	Table A16-2, Row 9, Criteria

1. Visibility minimums are subject to application of FAA Order 8260.3 (TERPS) and associated orders or this table, whichever are higher.
2. The HAT indicated is for planning purposes only. Actual obtainable HAT is determined by TERPS.
3. The GQS is applicable to approach procedures providing vertical path guidance. It limits the magnitude of penetration of the obstruction clearance surfaces overlying the final approach course. The intent is to provide a descent path from DA to landing free of obstructions that could destabilize the established glidepath angle. The GQS is centered on a course from the DA point to the runway threshold. Its width is equal to the precision "W" surface at DA, and tapers uniformly to a width 100 feet from the runway edges. If the GQS is penetrated, vertical guidance instrument approach procedures (ILS/MLS/WAAS/LAAS/Baro-VNAV) are not authorized
4. The "W" surface is applicable to precision approach procedures. It is a sloping obstruction clearance surface (OCS) overlying the final approach course centerline. The surface slope varies with glidepath angle. The "W" surface must be clear to achieve lowest precision minimums. Surface slope varies with glide path angle, 102/angle; e.g., for optimum 3º glide path 34:1 surface must be clear.
5. If the W surface is penetrated, HAT and visibility will be increased as required by TERPS.
6. This is a new airport surface (see paragraph 306). .
7. An ALP is only required for airports in the NPIAS; it is recommended for all others**.**
8. Runway edge lighting is required for night minimums. High intensity lights are required for RVR-based minimums.
9. A parallel taxiway must lead to the threshold and, with airplanes on centerline, keep the airplanes outside the OFZ.
10. To achieve lower visibility minimums based on credit for lighting, a TERPS specified approach light system is required.
11. Indicates what chart should be followed in the related chapters of this document.
12. Circling procedures to a secondary runway from the primary approach will not be authorized when the secondary runway does not meet threshold siting (reference Appendix 2), OFZ (reference paragraph 306) criteria, and TERPS Order paragraph 251 criteria.

Table A16-1B. Approach Procedure With Vertical Guidance (APV-RNP) Approach Requirements

Visibility Minimums[1]	< 3/4-statute mile	< 1-statute mile	1-statute mile	>1-statute mile[14]
Height Above Touchdown (HAT)[2]	250	300	350	400
TERPS Glidepath Qualification Surface (GQS)[3]	Table A2-1, Row 7, Criteria, and Appendix 2, par. 5a Clear			
TERPS Paragraph 251	34:1 clear	20:1 clear	20:1 clear, or penetrations lighted for night minimums (See AC 70/7460-1)	
Precision Obstacle Free Zone (POFZ) 200 x 800[4]	Required	Recommended		
Airport Layout Plan[5]	Required			
Minimum Runway Length	4,200 ft (1,280 m) (Paved)	3,200 ft (975 m)[6] (Paved)	3,200 ft (975 m)[6,7]	
Runway Markings (See AC 150/5340-1)	Nonprecision (Precision Recommended)		Nonprecision[7]	
Holding Position Signs & Markings (See AC 150/5340-1 and AC 150/5340-18)	Nonprecision *(Precision Recommended)*		Nonprecision[7]	
Runway Edge Lights[8]	HIRL / MIRL		MIRL/LIRL	
Parallel Taxiway [9]	Required		Recommended	
Approach Lights[10]	*Required*[11]		Recommended	
Runway Design Standards; e.g., Obstacle Free Zone (OFZ) [12]	APV OFZ Required			
Threshold Siting Criteria To Be Met [13]	Table A2-1, Row 4 and 9, Criteria		Appendix 2, Table A2-1, Lines 4 and 8, Criteria	
Survey Required for Lowest Minima	Table A16-2, Row 6, Criteria			

1. Visibility minimums are subject to the application of FAA Order 8260.3 (TERPS) and associated orders or this table, whichever is higher.
2. The HAT indicated is for planning purposes only. Actual obtainable HAT is determined by TERPS.
3. The GQS is applicable to approach procedures providing vertical path guidance. It limits the magnitude of penetration of the obstruction clearance surfaces overlying the final approach course. The intent is to provide a descent path from DA to landing free of obstructions that could destabilize the established glidepath angle. The GQS is centered on a course from the DA point to the runway threshold. Its width is equal to the precision "W" surface at DA, and tapers uniformly to a width 100 feet from the runway edges. If the GQS is penetrated, vertical guidance instrument approach procedures (ILS/MLS/WAAS/LAAS/Baro-VNAV) are not authorized
4. This is a new airport surface (see paragraph 306)
5. An ALP is only required for obligated airports in the NPIAS; it is recommended for all others**.**
6. Runways less than 3,200 feet are protected by 14 CFR Part 77 to a lesser extent (77.23(a)(2) is not applicable for runways less than 3,200 feet). However runways as short as 2400 feet could support an instrument approach provided the lowest HAT is based on clearing any 200-foot obstacle within the final approach segment.
7. Unpaved runways require case-by-case evaluation by regional Flight Standards personnel.
8. Runway edge lighting is required for night minimums. High intensity lights are required for RVR-based minimums.
9. A parallel taxiway must lead to the threshold and, with airplanes on centerline, keep the airplanes outside the OFZ.
10. To achieve lower visibility minimums based on credit for lighting, a TERPS specified approach light system is required.
11. ODALS, MALS, SSALS are acceptable. For LPV based minima approach lights are recommended not required.
12. Indicates what chart should be followed in the related chapters in this document.
13. Circling procedures to a secondary runway from the primary approach will not be authorized when the secondary runway does not meet threshold siting (reference Appendix 2), OFZ (reference paragraph 306) and TERPS paragraph 251 criteria.
14. For circling requirements, see Table 16-1C.

Table A16-1C. Nonprecision Approach Requirements

Visibility Minimums[1]	< 3/4-statute mile	< 1-statute mile	1-statute mile	>1-statute mile	Circling
Height Above Touchdown [2]	300	340	400	450	Varies
TERPS Paragraph 251	34:1 clear	20:1 clear	20:1 clear or penetrations lighted for night minimums (See AC 70/7460-1)		
Airport Layout Plan[3]	Required				Recommended
Minimum Runway Length	4,200 ft (1,280 m) (Paved)	3,200 ft (975 m)[4] (Paved)	3,200 ft (975 m)[4,5]		
Runway Markings (See AC 150/5340-1)	Precision	Nonprecision[5]			Visual (Basic)[5]
Holding Position Signs & Markings (See AC 150/5340-1 and AC 150/5340-18)	Precision	Nonprecision			Visual (Basic)[5]
Runway Edge Lights[6]	HIRL / MIRL		MIRL / LIRL		MIRL / LIRL (Required only for night minima)
Parallel Taxiway [7]	Required		Recommended		
Approach Lights[8]	MALSR, SSALR, or ALSF Required	Required [9]	Recommended[9]		Not Required
Runway Design Standards, e.g. Obstacle Free Zone (OFZ)[10]	<3/4-statute mile approach visibility minimums	≥ 3/4-statute mile approach visibility minimums			Not Required
Threshold Siting Criteria To Be Met [11]	Table A2-1, Row 9, Criteria	Table A2-1, Row 8, Criteria	Table A2-1, Row 1–5, Criteria		Table A2-1, Row 1–2, Criteria
Survey Required for Lowest Minima	Table A16-2, Row 5, Criteria	Table A16-2, Row 4, Criteria	Table A16-2, Row 3, Criteria		Table A16-2, Row 1,2,3, Criteria

1. Visibility minimums are subject to the application of FAA Order 8260.3 (TERPS) and associated orders or this table, whichever is higher.
2. The Height Above Touchdown (HAT) indicated is for planning purposes only. Actual obtainable HAT is determined by TERPS.
3. An ALP is only required for obligated airports in the NPIAS; it is recommended for all others**.**
4. Runways less than 3,200 feet are protected by 14 CFR Part 77 to a lesser extent. However runways as short as 2400 feet could support an instrument approach provided the lowest HAT is based on clearing any 200-foot obstacle within the final approach segment.
5. Unpaved runways require case-by-case evaluation by regional Flight Standards personnel.
6. Runway edge lighting is required for night minimums. High intensity lights are required for RVR-based minimums.
7. A parallel taxiway must lead to the threshold and, with airplanes on centerline, keep the airplanes outside the OFZ.
8. To achieve lower visibility minimums based on credit for lighting, a TERPS specified approach lighting system is required.
9. ODALS, MALS, SSALS, SALS are acceptable.
10. Indicates what chart should be followed in the related chapters in this document.
11. Circling procedures to a secondary runway from the primary approach will not be authorized when the secondary runway does not meet threshold siting (reference Appendix 2), OFZ (reference paragraph 306), and TERPS Order, 8260.3 paragraph 251, criteria.

Table A16-2. Survey Requirements for Instrument Approach Procedures

The table indicates the acceptable runway obstruction survey needed to support an instrument approach procedure. For a complete description of the survey types and associated requirements, refer to AC 150/5300-18.

		Runway Survey Type								
	Approach	None	AV	BV	ANP	C	SUPLC	D	ANAPC	PIR
1	Night Circling			X	X	X	X	X	X	X
2	Non-Precision Approach ≥ 1SM, Day Only	X	X	X	X	X	X	X	X	X
3	Non-Precision Approach ≥ 1SM				X	X	X	X	X	X
4	Non-Precision Approach < 1SM					X	X	X	X	X
5	Non-Precision Approach < ¾ SM								X	X
6	NPV Approach ≥ ¾ SM							X	X	X
7	NPV Approach < ¾ SM								X	X
8	Precision CAT I Approach < 1SM							X	X	X
9	Precision CAT I Approach < ¾ SM								X	X
10	Precision CAT II Approach									X
11	Precision CAT III Approach									X

Note:
An "X" in each column for a given Approach (1 through 11) denotes a survey that is acceptable to support that approach. As shown, multiple surveys may support the approach, however the "X" farthest to the left indicates the minimum survey needed.

Runway survey types from FAA No. 405, Standards for Aeronautical Surveys and Related Products:

AV - FAR77 Visual Approach - Utility runway, includes approach and primary surfaces only.
BV - FAR77 Visual Approach, includes approach and primary surfaces only.
ANP - FAR77 Nonprecision Approach - Utility runway, includes approach and primary surfaces only.
C - FAR77 Nonprecision Approach - Visibility minimums greater than 3/4 mile includes approach and primary surfaces only.
SUPLC - C Approach underlying a BV approach, includes approach and primary surfaces only.
D - FAR77 Nonprecision Approach - Visibility minimums as low as 3/4 mile includes approach and primary surfaces only.
ANAPC - Area Navigation Approach - Precision, conventional landing, includes approach, primary, transition, and missed approach surfaces.
PIR - FAR77 Precision Instrument Approach, includes approach and primary surfaces only.

Appendix 17. MINIMUM DISTANCES BETWEEN CERTAIN AIRPORT FEATURES AND ANY ON-AIRPORT AGRICULTURE CROPS

Table A17-1. Minimum Distances Between Certain Airport Features and Any On-Airport Agriculture Crops

Aircraft Approach Category and Design Group [1]	Distance in Feet From Runway Centerline to Crop		Distance in Feet From Runway End to Crop		Distance in Feet from Centerline of Taxiway to Crop	Distance in Feet from Edge of Apron to Crop
	Visual & ≥ ¾ mile	< ¾ mile	Visual & ≥ ¾ mile	< ¾ mile		
Category A & B Aircraft						
Group I	200 [2]	400	300[3]	600	45	40
Group II	250	400	400[3]	600	66	58
Group III	400	400	600	800	93	81
Group IV	400	400	1,000	1,000	130	113
Category C, D, & E Aircraft						
Group I	530 [3]	575 [3]	1,000	1,000	45	40
Group II	530 [3]	575 [3]	1,000	1,000	66	58
Group III	530 [3]	575 [3]	1,000	1,000	93	81
Group IV	530 [3]	575 [3]	1,000	1,000	130	113
Group V	530 [3]	575 [3]	1,000	1,000	160	138
Group VI	530 [3]	575 [3]	1,000	1,000	193	167

1. Design Groups are based on wing span or tail height, and Category depends on approach speed of the aircraft as shown below:

Design Group	**Category**
Group I: Wing span up to 49 ft.	Category A: Speed less than 91 knots
Group II Wing span 49 ft. up to 73 ft.	Category B: Speed 91 knots up to 120 knots
Group III: Wing span 79 ft. up to 117 ft.	Category C: Speed 121 knots up to 140 knots
Group IV: Wing span 113 ft. up to 170 ft.	Category D: Speed 141 knots up to 165 knots
Group V: Wing span 171 ft. up to 213 ft.	Category E: Speed 166 knots or more
Group VI: Wing span 214 ft. up to 261 ft.	

2. If the runway will only serve small airplanes (12,500 lb. and under) in Design Group I, this dimension may be reduced to 125 feet; however, this dimension should be increased where necessary to accommodate visual navigational aids that may be installed. For example, farming operations should not be allowed within 25 feet of a Precision Approach Path Indicator (PAPI) light box.

3. These dimensions reflect the Threshold Siting Surface (TSS) as defined in AC 150/5300-13, Appendix 2. The TSS cannot be penetrated by any object. Under these conditions, the TSS is more restrictive than the OFA, and the dimensions shown here are to prevent penetration of the TSS by crops and farm machinery.

Appendix 18. ACRONYMS

The acronyms presented herein are intended for use with this publication only.

AAA	Airport Airspace Analysis
AC	Advisory Circular
AD	Airport Design
AFD	Airport Facility Directory
ADG	Airplane Design Group
AIP	Airport Improvement Program or Aeronautical Information Publication
ALP	Airport Layout Plan
ALS	Approach Lighting System
ALSF(-1, -2)	Approach Lighting System with Sequenced Flashers
APV	Approach Procedure with Vertical Guidance
ARC	Airport Reference Code
ARP	Airport Reference Point
ASDA	Accelerate-Stop Distance Available
ASDE	Airport Surface Detection Equipment
ASR	Airport Surveillance Radar
ATC	Air Traffic Control
ATCT	Airport Traffic Control Tower
AWOS	Automated Weather Observing System
AZ	Azimuth
BRL	Building Restriction Line
CAT	Category
CFR	Code of Federal Regulation
CFW	Center Field Wind
CWY	Clearway
DA	Decision Altitude
DER	Departure End of Runway
DME	Distance Measuring Equipment
DXF	AutoCAD Drawing Interchange file format
EDS	Environmental Data Service
EL	Elevation
FBO	Fixed Base Operator
GPA	Glidepath Angle
GPS	Global Positioning System
GQS	Glidepath Qualification Surface
GS	Glide Slope
GVGI	Generic Visual Slope Indicator
HAT	Height Above Touchdown
HIRL	High Intensity Runway Lights
IFR	Instrument Flight Rules
IGES	Initial Graphics Exchange Specification file format
ILS	Instrument Landing System
IM	Inner Marker
IMC	Instrument Meteorological Conditions
LAAS	Local Area Augmentation System
LDA	Landing Distance Available or Localizer Type Directional Aid
LDIN	Lead-In Lights
LIRS	Low Impact Resistant Supports
LNAV	Lateral Navigation
LOC	Localizer
LPV	Localizer Performance with Vertical Guidance
MALS	Medium Intensity Approach Lighting System
MALSF	Medium Intensity Approach Lighting System with Sequenced Flashers
MALSR	Medium Intensity Approach Lighting System with Runway Alignment Indicator Lights
MIRL	Medium Intensity Runway Lights
MLS	Microwave Landing System
MM	Middle Marker
MSL	Mean Sea Level
NAVAID	Navigational Aid
NCDC	National Climatic Data Center
NDB	Nondirectional Beacon
NP	Mon-Precision (Markings
NPIAS	National Plan of Integrated Airport Systems
NTIS	National Technical Information Service
OCS	Obstacle Clearance Surface
ODALS	Omnidirectional Approach Lighting System
OEI	One Engine Inoperative
OFA	Object Free Area
OFZ	Obstacle Free Zone
OIS	Obstacle Identification Surface
OM	Outer Marker
NPA	Non-Precision Approach
P	Precision (Markings)
PA	Precision Approach
PAPI	Precision Approach Path Indicator
POFA	Precision Object Free Area
RAIL	Runway Alignment Indicator Lights
REIL	Runway End Identifier Lights
RNAV	Area Navigation
ROFA	Runway Object Free Area
RPZ	Runway Protection Zone
RSA	Runway Safety Area
RVR	Runway Visual Range
RW	Runway
SALS	Short Approach Lighting System
SSALR	Short Simplified Approach Lighting System with Runway Alignment Indicator Lights
SSALS	Simplified Short Approach Lighting System
SWY	Stopway
TCH	Threshold Crossing Height
TERPS	FAA Order 8260.3, *United States Standard for Terminal Instrument Procedures*
TH	Threshold
TL	Taxilane
TODA	Takeoff Distance Available
TORA	Takeoff Run Available
TSA	Taxiway Safety Area
TVOR	Terminal Very High Frequency Omnirange
TW	Taxiway

USGS	United States Geological Service
V	Visual (Markings)
V_1	Takeoff decision speed
V_2	Takeoff safety speed
VFR	Visual Flight Rules
V_{LOF}	Lift-off speed
V_{SO}	Stalling speed or the minimum steady flight speed in the landing configuration
VNAV	Vertical Navigation
VOR	Very High Frequency Omnirange
WAAS	Wide Area Augmentation System

Appendix 19. INDEX

Accelerate-Stop Distance Available (ASDA)
definition....2
length....276
Acronyms....297
Administration Building....118
Aeronautical Studies....6, 13
Aircraft Approach Category
airplane listing....251
definition....1
selection....5
Aircraft Parking Area....10, 14, 15, 117, 139
Airplane Data....156, 165, 251
Airplane Design Group (ADG)
airplane listing....251
definition....1
selection....5
Airport Buildings....117
Airport Design Standards Modification....5
Airport Elevation
definition....1
Airport Layout Plan (ALP)
application....9
definition....1
requirements....5
Airport property requirements....9
Airport Reference Code (ARC)
definition....4
standards....5
Airport Reference Point (ARP)
definition....1
standards....109
Airport Rotating Beacon....65
Airport Surface Detection Equipment (ASDE)....66
Airport Surveillance Radar (ASR)....66
Airport survey....122
Airport Traffic Control Tower (ATCT)....65
Airport Traffic Control Tower Visibility....10, 35
Airspace Availability....9
Approach Lighting System (ALS)
ALSF-2....64
MALS....64
MALSF....64
MALSR....64
Apron for Based Airplanes....117
Aprons
criteria....10
gradient....54
Auto Parking....13, 123
Aviation easements....9
Bird Hazards....10, 13
Blast Fence
criteria....77
definition....1
Bridges
approach aprons....70
blast protection....70
curbs....70
height....69
length....69
load considerations....69
longitudinal grades....69
marking and lighting....69
pavement heating....70
security fences....7
service roads....70
siting precepts....69
width....69
Building Plan....122
Building Restriction Lie (BRL)
criteria....12
definition....1
Bypass Taxiway....34
Category (CATI) Runway....2
Category (CATII) Runway....2
Category III (CAT III) Runway....2
Center Field Wind (CFW) Installations....66
Clear Zone....1
Clear Zone (See Runway Protection Zone)....2, 13, 276
Clearway (CWY)
definition....1
standards....22, 139, 276
Compass Calibration Pad
criteria....111
definition....1
Computer Program....34, 35, 88, 146, 153
Crosswind Runway....10, 87
Crosswinds
definition....87
Declared Distances
criteria....275, 276
definition....2
Displaced Threshold
definition....3
siting requirements....101
Dual Parallel Taxiway....34
Eating Facilities....123
Electronic Deliverables....283
Entrance Taxiway....34
Environmental Assessments....6, 9
Exit Taxiway....35, 142
FAA Studies of Objects....6, 13
Federal Assistance....6

Frangible NAVAID
definition ... 2
Hangars ... 118
Hazard to Air Navigation
definition ... 2
determination ... 6
presumption ... 2
Holding Bay ... 34
Holdline
to runway ... 10, 14, 15, 139
Inner-approach OFZ
definition ... 2
standards ... 22
Inner-transitional OFZ
definition ... 2
standards ... 22
Instrument Approach Procedures ... 291
Instrument Landing System (1LS)
glide slope ... 61, 62
localizer ... 61, 62
marker beacons ... 61, 63
Jet Blast
heat effects ... 77
pressures ... 77
velocity distances ... 77
Landing Distance Available (LDA)
definition ... 2
length ... 276
Large Airplane
definition ... 2
Lead-in Lighting System (LDIN) ... 65
Local Role ... 6
Low Impact Resistant Supports (LIRS)
definition ... 2
Manager's Office ... 123
Microwave Landing System (MLS) ... 59
Modification of Airport Design Standards ... 5
Navigational Aids (NAVAIDs)
clearing requirements ... 59
non-Federal ... 59
protection ... 59, 67
siting ... 59
Nondirectional Beacon (NDB) ... 63
Notice to the FAA
airport development ... 5
proposed construction ... 6
Object
definition ... 2
Object Clearing Criteria
recommendations ... 13
standards ... 12
Object Free Area (OFA)
definition ... 2
standards ... 22, 33, 276
Obstacle Free Zone (OFZ)
definition ... 2
standards ... 21, 139
Obstruction to Air Navigation
definition ... 2
presumption ... 2
survey requirement ... 9
Omindirectional Approach Lighting System (ODALS) ... 65
Parallel Taxiway ... 33
Precision Object Free Area ... 22
Property requirements ... 9
Public Restrooms ... 123
Recommendations
requirement ... 1
Related Reading Material ... 3
Rescue and Firefighting Access Roads ... 23
Roads ... 123
Runway (RW)
definition ... 3
gradient ... 49
length ... 21
line of sight ... 56
location ... 9
orientation ... 9, 87
requirements for additional runways ... 10, 87
to aircraft parking area ... 10, 14, 15, 139
to helicopter touchdown pad ... 10, 14, 15
to holdline ... 10, 14, 15, 139
to parallel runway ... 11
to parallel taxilane ... 10, 12, 14, 15, 139
to parallel taxiway ... 10, 12, 14, 15, 139
width ... 21
Runway Blast Pad
definition ... 3
drainage ... 78
gradient ... 54
length ... 21, 78
marking sod lighting ... 78
surface characteristics ... 21
surface strength ... 78
width ... 21, 78
Runway Object Free Area
background ... 139
definition ... 2
standards ... 22, 276
Runway Obstacle Free Zone (OFZ)
definition ... 2
standards ... 21
Runway Protection Zone (RPZ)
criteria ... 13, 140, 276
definition ... 3
Runway Safety Area (RSA)
background ... 139
definition ... 3
gradient ... 54
length ... 21, 276
surface characteristics ... 21
width ... 21

Runway Shoulder
definition (See Shoulder) ... 3
drainage ... 78
gradient ... 54
marking and lighting ... 78
strength ... 78
surface characteristics ... 21
width ... 21, 78
Runway visibility zone ... 56
Runway Visual Range Facilities ... 66
Separation Standards ... 10, 14-16
Shoulder
definition ... 3
Small Airplane
definition ... 3
Standards
applicability ... 5
modification ... 5
requirements ... 1
State Role ... 6
Stopway (SWY)
definition ... 3
gradient ... 49
location ... 23
standards ... 139
surface characteristics ... 23
width ... 23
Takeoff Distance Available (TODA)
definition ... 1
length ... 276
Takeoff Run Available (TORA)
definition ... 1
length ... 276
Taxilane (TL)
airport traffic control tower visibility ... 35
definition ... 3
dimensional standards ... 33
on apron edge ... 35
to object ... 10, l6, 141
to parallel runway ... 10, 12, 14, 15, 139
to parallel taxilane ... 10, l6, 141
to parallel taxiway ... 10, l6, 141
to parked aircraft ... 10, l6, 141
to service and maintenance roads ... 10, l6, 141
Taxilane Object Free Area
definition ... 2
standards ... 33
width ... 33, 141
wingtip clearance ... 33
Taxiway (TW)
airport traffic control tower visibility ... 35
definition ... 3
dimensional standards ... 33
edge safety margin ... 34, 38
gradient ... 54
intersections ... 34
layout ... 10
line of sight ... 56
on apron edge ... 35
pavement filet ... 34, 38, 40, 149
taxiway between parallel runways ... 35
to object ... 10, 16, 141
to parallel runway ... 10, 12, 14, 15, 139
to parallel taxilane ... 10, l6, 141
to parallel taxiway ... 10, l6, 141
to parked aircraft ... 10, l6, 141
to service and maintenance roads ... 10, l6, 141
width ... 33, 38, 141
Taxiway Object Free Area
definition ... 2
standards ... 33
width ... 33, 141
wingtip clearance ... 33
Taxiway Safety Area (TSA)
definition ... 3
gradient ... 54
surface characteristics ... 33
width ... 33, 142
Taxiway Shoulder
definition (See Shoulder) ... 3
drainage ... 78
gradient ... 54
marking and lighting ... 78
strength ... 78
surface characteristics ... 33
width ... 33, 78
Terminal Very High Frequency Omnirange (TVOR) ... 64
Threshold (TH)
definition ... 3
siting requirements ... 101
Tiedowns ... 117, 118
Transient Apron ... 117
Tunnels
drainage ... 70
lighting ... 70
passenger and baggage ... 70
ventilation ... 70
Turnaround ... 35
Vehicle Parking ... 13, 123
Visual Runway
definition ... 3
Waiting Room ... 122
Wildlife Hazards ... 10, 13
Wind Analysis ... 9, 87
Wind Coverage ... 87
Wingtip Clearance ... 33, 146

Recycled
Recyclable