ITEM P-606 ADHESIVE COMPOUNDS, TWO-COMPONENT FOR SEALING WIRE AND LIGHTS IN PAVEMENT

DESCRIPTION

606-1.1. This specification covers two types of material; a liquid suitable for sealing electrical wire in saw cuts in pavement and for sealing light fixtures or bases in pavement, and a paste suitable for embedding light fixtures in the pavement. Both types of material are two-component filled formulas with the characteristics specified in paragraph 606-2.4. Materials supplied for use with bituminous concrete pavements must be formulated so they are compatible with the bituminous concrete.

* * * *

TABLE 1. PROPERTY REQUIREMENTS

Physical or Electrical Property	Minimum	Maximum	ASTM Method
Tensile			
Portland Cement Concrete	1,000 psi (70 kg/sq.cm)		D 638
Bituminous Concrete	500 psi (35 kg/sq.cm)		
Elongation			
Portland Cement Concrete		\1\	D 638
Bituminous Concrete	50%		D 638
Coef. of cub. exp. cu. cm/cu. cm/degree C	0.00090	0.00120	D 1168
Coef. of lin. exp. cm/cm/degree C	0.00030	0.00040	D 1168
Dielectric strength, short time test	350 volts/mil.		D 149
Arc resistance	125 secs.		D 495
Adhesion to steel	1,000 psi (70 kg/sq.cm)		
Adhesion to portland cement concrete	200 psi (14 kg/sq.cm)		
Adhesion to asphalt concrete	(no test available)		

\1\ 20% or more (without filler) for formulations to be supplied for areas subject to freezing.

606-3.4 TEST FOR ARC RESISTANCE. Test for arc resistance shall be conducted in accordance with ASTM D 495 for sealing compounds to be furnished for sealing electrical wires in pavement.

606-3.5 TEST FOR ADHESION TO STEEL. The ends of two smooth, clean, steel specimens of convenient size (1 inch by 1 inch by 6 inches) (25 by 25 by 150 mm) would be satisfactory when bonded together with adhesive mixture and allowed to cure at room temperature for a period of time to meet formulation requirements and then tested to failure on a Riehle (or similar) tensile tester. The thickness of adhesive to be tested shall be 1/4 inch (6 mm).

606-3.6 ADHESION TO PORTLAND CEMENT CONCRETE

a. Concrete Test Block Preparation. The aggregate grading shall be as shown in Table 2.

The coarse aggregate shall consist of crushed rock having a minimum of 75% of the particles with at least one fractured face and having a water absorption of not more than 1.5%. The fine aggregate shall consist of crushed sand manufactured from the same parent rock as the coarse aggregate. The concrete shall have a water-cement ratio of 5.5 gallons (21 liters) of water per bag of cement, a cement factor of 6, plus or minus 0.5, bags of cement per cubic yard (0.76 cubic meter) of concrete, and a slump of 2-1/2 inches, plus or minus 1/2 inch (60 mm plus or minus 12 mm). The ratio of fine aggregate to total aggregate shall be approximately 40% by solid volume. The air content shall be 5.0%, plus or minus 0.5%, and it shall be obtained by the addition to the batch of an air-entraining admixture such as vinsol resin. The mold shall be of metal and shall be provided with a metal base plate. Means shall be provided for securing the base plate to the mold. The assembled mold and base plate shall be watertight and shall be oiled with mineral oil before use. The inside measurement of the mold shall be such that several 1-inch by

2-inch by 3-inch (25 by 50 by 75 mm) test blocks can be cut from the specimen with a concrete saw having a diamond blade. The concrete shall be prepared and cured in accordance with ASTM C 192.

TABLE 2. AGGREGATE FOR BOND TEST BLOCKS

Type	Sieve Size	Percent Passing
Coarse Aggregate	3/4 inch (19.0 mm)	97 to 100
	1/2 inch (12.5 mm)	63 to 69
	3/8 inch (9.5 mm)	30 to 36
	No. 4 (4.75 mm)	0 to 3
Fine Aggregate	No. 4 (4.75 mm)	100
	No. 8 (2.36 mm)	82 to 88
	No. 16 (1.18 mm)	60 to 70
	No. 30 (600 micro-m)	40 to 50
	No. 50 (300 micro-m)	16 to 26
	No. 100 (150 micro-m)	5 to 9

b. Bond Test. Prior to use, oven-dry the test blocks to constant weight at a temperature of 220 to 230°F (104°C to 110°C), cool to room temperature, 73.4 plus or minus 3°F (23°C plus or minus 1.6°C), in a desiccator, and clean the surface of the blocks of film or powder by vigorous brushing with a stiff-bristled fiber brush. Two test blocks shall be bonded together on the 1-inch by 3-inch (25 by 75 mm) sawed face with the adhesive mixture and allowed to cure at room temperature for a period of time to meet formulation requirements and then tested to failure in a Riehle (or similar) tensile tester. The thickness of the adhesive to be tested shall be 1/4 inch (6 mm).

606-3.7 COMPATIBILITY WITH ASPHALT CONCRETE. Test for compatibility with asphalt in accordance with ASTM D 5329.

606-3.8 ADHESIVE COMPOUNDS - CONTRACTOR'S RESPONSIBILITY. The Contractor shall furnish the vendor's certified test reports for each batch of material delivered to the project. The report shall certify that the material meets specification requirements and is suitable for use with **[portland cement concrete] [bituminous concrete]** pavements. The report shall be delivered to the Engineer before permission is granted for use of the material. In addition the Contractor shall obtain a statement from the supplier or manufacturer that guarantees the material for one year. The supplier or manufacturer shall furnish evidence that the material has performed satisfactorily on other projects.

606-3.9 APPLICATION. Adhesive shall be applied on a dry, clean surface, free of grease, dust, and other loose particles. The method of mixing and application shall be in strict accordance with the manufacturer's recommendations.

* * * *

no measurement will be made for direct payment of adhesive, as the cost of furnishing and installing shall be considered as a subsidiary obligation in the completion of the installation.

BASIS OF PAYMENT

606-5.1 Payment shall be made, where applicable, at the contract unit price per **[pound (kg)] [gallon (l)]** for the adhesive. This price shall be full compensation for furnishing all materials, and for all preparation, delivering, and application of these materials, and for all labor, equipment, tools, and incidentals necessary to complete the item.

Item P-606-5.1 Adhesive Compound - per [pound (kg)] [gallon (l)]

TESTING REQUIREMENTS

ASTM C 192 Making and Curing Concrete Compression and Flexure Test Specimens in the Laboratory.

ASTM D 149 Tests for Dielectric Breakdown Voltage and Dielectric Strength of Electrical Insulating Materials at Commercial Power Frequencies.

ASTM D 495 Test for High-Voltage, Low-Current, Dry Arc Resistance of Solid Electrical Insulation Materials

ASTM D 638 Test for Tensile Properties of Plastics

ASTM D 1168 Test for Hydrocarbon Waxes Used for Electrical Insulation

ASTM D 5329 Joint Sealants, Hot-poured, for Concrete and Asphalt Pavements

END OF ITEM P-606

ITEM P-609 SEAL COATS AND BITUMINOUS SURFACE TREATMENTS

DESCRIPTION

* * * *

MATERIALS

609-2.1 AGGREGATE MATERIALS. The aggregate material shall be either crushed stone, crushed gravel, or crushed slag. The cover material shall be screenings; sand may be used when specified.

If the material is to be crushed stone, it shall be manufactured from sound, hard, durable rock of accepted quality and crushed to specification size. All strata, streaks, and pockets of clay, dirt, sandstone, soft rock, or other unsuitable material accompanying the sound rock shall be discarded and not allowed to enter the crusher.

If the material is to be crushed gravel, it shall consist of hard, durable, fragments of stone or gravel of accepted quality and crushed to specification size. All strata, streaks, and pockets of sand, excessively fine gravel, clay, or other unsuitable material including all stones, rocks, and boulders of inferior quality shall be discarded and not allowed to enter the crusher. The crushing of the gravel shall result in a product in which the material retained on the separate No. 4, 3/8 inch, and 1/2 inch (4.75 mm, 9 mm, and 12 mm) sieves shall have at least 75% of particles with at least one fractured face.

Crushed slag shall be air-cooled, blast furnace slag, reasonably uniform in density and quality, and shall weigh not less than 70 pounds per cubic foot (1.12 mg/cubic meter) as determined by ASTM C 29.

The crushed aggregate shall not contain more than 8%, by weight, of elongated or flat pieces and shall be free from wood, roots, vegetable, organic, or other extraneous matter. The crushed coarse aggregate shall have a percentage of wear not more than 40 at 500 revolutions, as determined by ASTM C 131.

The aggregate shall show no evidence of disintegration or show a total loss greater than 12% when subjected to five cycles of the sodium sulphate accelerated soundness test specified in ASTM C 88.

The crushed aggregate for the applications shall meet the requirements for gradation given in Table 2 when tested in accordance with ASTM C 136.

TABLE 2. REQUIREMENTS FOR GRADATION OF AGGREGATE

Aggregate for first application	
Sieve Designation (square openings)	Percentage by Weight Passing Sieves
1 inch (25.0 mm)	100
3/4 inch (19.0 mm)	90-100
1/2 inch (12.5 mm)	20-55
3/8 inch (9.5 mm)	0-15
No. 4 (4.75 mm)	0-5
Aggregate for second application	
Sieve Designation (square openings)	Percentage by Weight Passing Sieves
1/2 inch (12.5 mm)	100
3/8 inch (9.5 mm)	85-100
No. 4 (4.75 mm)	10-30
No. 8 (2.36 mm)	0-10
No. 16 (1.18 mm)	0-5
Aggregate for third application	
Sieve Designation (square openings)	Percentage by Weight Passing Sieves
3/8 inch (9.5 mm)	100
1/4 inch (6.2 mm)	90-100
No. 4 (4.75 mm)	60-85
No. 8 (2.36 mm)	0-25
No. 16 (1.18 mm)	0-5
No. 200 (0.075 mm)	0-2

The gradations in the table represent the limits that shall determine suitability of aggregate for use for the specified applications from the sources of supply. The final gradations decided on, within the limits designated in the table, shall be uniformly graded from coarse to fine.

The cover aggregate used in the third application shall be a light-colored material whose color and reflectivity shall be approved by the Engineer.

The aggregate to be used shall show no evidence of stripping or swell when tested in accordance with AASHTO T 182. The use of antistrip agents for the control of stripping shall be used if necessary.

609-2.2 BITUMINOUS MATERIAL. The types, grades, controlling specifications, and application temperatures for the bituminous materials are shown in Table 3. The Engineer shall designate the specific material to be used.

TABLE 3. BITUMINOUS MATERIALS

Type and Grade	Specification	Spraying Temperature[1]	
		Deg. F	Deg. C
Asphalt Cement			
AC 2.5, AC-5	ASTM D 3381	275+	135+
AR-1000, 2000	ASTM D 3381	280+	140+
120-150, 200-300	ASTM D 946	270+	130+
Emulsified Asphalt			
RS-1	ASTM D 977	70-140	20-60
RS-2	ASTM D 977	125-175	50-80
MS-1, HFMS-1	ASTM D 977	70-160	20-70
CRS-1	ASTM D 2397	125-175	50-80
CRS-2	ASTM D 2397	125-175	50-80

[1] The maximum temperature for asphalt cements shall be below that at which fogging occurs.

CONSTRUCTION METHODS

609-3.1 WEATHER LIMITATIONS. Bituminous material shall be applied only when the existing surface is dry and the atmospheric temperature is above 60°F (15°C). No material shall be applied when rain is imminent or when dust or sand is blowing.

609-3.2 OPERATION OF PITS AND QUARRIES. The aggregate material shall be obtained from sources approved by the engineer. The Contractor shall make all necessary arrangements for obtaining the material, and all work involved in clearing and stripping pits or quarries and handling unsuitable material shall be performed by the Contractor at his/her own expense. The material in the pits shall be handled so that a uniform and satisfactory product shall be secured. Unless otherwise directed, pits shall be adequately drained and shall be left in a neat and presentable condition with all slopes dressed uniformly. Quarries shall be left as neat and presentable as practicable.

609-3.3 EQUIPMENT AND TOOLS. The Contractor shall furnish all equipment, tools, and machines necessary for the performance of the work.

a. Pressure Distributor. The distributor shall be designed, equipped, maintained, and operated so that bituminous material at even heat may be applied uniformly on variable widths of surface at the specified rate. The allowable variation from the specified rate shall not exceed 10 percent. Distributor equipment shall include a tachometer, pressure gages, volume-measuring devices or a calibrated tank, and a thermometer for measuring temperatures of tank contents. The distributor shall be self-powered and shall be equipped with a power unit for the pump and full circulation spray bars adjustable laterally and vertically.

b. Aggregate Spreader. The aggregate spreader shall be a self-propelled mechanical spreader or truck-attached mechanical spreader capable of uniformly distributing aggregate at the specified rates.

c. Roller. The roller shall be a pneumatic-tired roller with an effective rolling width of at least 60 inches (152 cm) and capable of exerting a minimum contact pressure of 40 pounds per square inch (280,000 newtons per square meter).

d. Power Broom. A power broom and/or blower shall be provided for removing loose material from the surface to be treated.

609-3.4 PREPARING UNDERLYING COURSE. The surface of the underlying course shall be prepared, shaped, and conditioned to a uniform grade and section, as shown on the plans and as specified. Loose dirt and other objectionable material shall be removed from the surface.

On those type of bases where a prime coat is required and specified, the prime shall be applied and satisfactorily cured before starting the bituminous surface treatment.

When specified, the Contractor shall be required to patch, with premixed material, any holes or other malformations deviating from the true cross section and grade. The premixed material shall be made of the bituminous material specified in the proposal or plans and prepared by the method as directed by the Engineer. All small patches shall be thoroughly hand tamped while the large patches shall be rolled with a power or pneumatic roller.

609-3.5 APPLICATION OF BITUMINOUS MATERIAL. Bituminous material shall be applied upon the properly prepared surface at the rate and temperature specified using a pressure distributor to obtain uniform distribution at all points. To insure proper drainage, the strips shall begin along the centerline of the pavement on a crowned section or on the high side of the pavement with a one-way slope. During all applications, the surfaces of adjacent structures shall be protected in such manner as to prevent their being spattered or marred. Bituminous materials shall not be discharged into borrow pits or gutters or upon the airport area.

609-3.6 APPLICATION OF AGGREGATE MATERIAL. Immediately after the application of the bituminous material or when directed, the aggregates at the rate specified for each designated application shall be spread uniformly over the bituminous material. Trucks spreading aggregate shall be operated backward so that the bituminous material will be covered before the truck wheels pass over it. The aggregate shall be spread in the same width of application as the bituminous material and shall not be applied in such thickness as to cause blanketing. Back-spotting or sprinkling of additional aggregate material, and pouring additional bituminous material over areas that show up having insufficient cover or bitumen, shall be done by hand whenever necessary. Additional spreading of aggregate material shall be done by means of a motor-patrol grader equipped with broom moldboard, a broom drag, or a power broom, as directed by the Engineer.

Immediately after spreading each application, the aggregate shall be rolled. The rolling shall be continued until no more aggregate material can be worked into the surface. In the construction of the second and third application, blading with the wire-broom moldboard attachment or broom dragging shall begin as soon as possible after the rolling has started and after the surface has set sufficiently to prevent excessive marking. Further blading and rolling on the strip being placed and on adjacent strips previously placed, shall be done as often as necessary to keep the aggregate material uniformly distributed. These operations shall be continued until the surface is evenly covered and cured to the satisfaction of the Engineer.

Succeeding applications shall not be applied until the preceding application has set and in no case until at least 24 hours have elapsed. If dust, dirt, or other foreign matter accumulates on the surface between the applications, the Contractor shall be required to sweep and clean the surface as specified herein. The bituminous material and the aggregate shall be spread upon the clean and properly cured surface and handled as required. Extreme care shall be taken in all applications to avoid brooming or tracking dirt or any foreign matter on any portion of the pavement surface under construction.

All surplus aggregate from the final application shall be swept off the surface and removed prior to final acceptance of the work.

609-3.7 CORRECTION OF DEFECTS. Any defects, such as raveling, low centers, lack of uniformity, or other imperfections caused by faulty workmanship, shall be corrected immediately to the satisfaction of the Engineer.

All defective materials resulting from over-heating, improper handling, or application shall be removed by the Contractor and replaced with approved materials as provided for in these specifications.

609-3.8 BITUMINOUS MATERIAL CONTRACTOR'S RESPONSIBILITY. Samples of the bituminous materials that the Contractor proposes to use, together with a statement as to their source and character, shall be submitted and approval obtained before use of such materials begins.

The Contractor shall furnish vendor's certified test reports for each carload, or equivalent, of bitumen shipped to the project. The report shall be delivered to the Engineer before permission is granted for use of the material. The furnishing of the vendor's certified test report for the bituminous material shall not be interpreted as a basis for final acceptance. All such test reports shall be subject to verification by testing sample materials as received for use on the project.

609-3.9 FREIGHT AND WEIGH BILLS. Before the final estimate is allowed the Contractor shall file with the Engineer receipted bills where railroad shipments are made, and certified weight bills when materials are received in any other manner, of the bituminous and covering materials actually used in the construction covered by the contract. The Contractor shall not remove bituminous material from the tank car or storage tank until the initial outage and temperature measurements have been taken by the Engineer, nor shall the car or tank be released until the final outage has been taken by the Engineer.

Copies of all freight bills and weigh bills shall be furnished to the Engineer during the progress of the work.

METHOD OF MEASUREMENT

609-4.1 The bituminous material shall be measured by the **[gallon(liter)][ton (kg)]**. Volume shall be corrected to the volume at 60°F (15°C) in accordance with ASTM D 1250 for cutback asphalt and Table IV-3 of The Asphalt Institute's Manual MS-6 for emulsified asphalt. Water added to emulsified asphalt will not be measured for payment.

609-4.2 The quantity of aggregate materials for the first application to be paid for shall be the number of tons (kg) of aggregate used for the accepted work.

609-4.3 The quantity of aggregate material for the second application to be paid for shall be the number of tons (kg) of aggregate used for the accepted work.

609-4.4 The quantity of aggregate material for the third application to be paid for shall be the number of tons (kg) of aggregate used for the accepted work.

BASIS OF PAYMENT

609-5.1 Payment shall be made at the contract unit price per **[gallon][ton]** for bituminous material for surface treatment and per ton for the first, second and third aggregate application. These prices shall be full compensation for furnishing all materials and for all preparation, hauling and application of the materials, and for all labor, equipment, tools, and incidentals necessary to complete the item.

Payment will be made under:

Item P-609-5.1	Bituminous Material—per **[gallon (liter)][ton (kg)]**
Item P-609-5.2	First Application Aggregate—per ton (kg)
Item P-609-5.3	Second Application Aggregate—per ton (kg)
Item P-609-5.4	Third Application Aggregate—per ton (kg)

TESTING REQUIREMENTS

ASTM C 29	Unit Weight of Aggregate
ASTM C 88	Soundness of Aggregates by Use of Sodium Sulfate or Magnesium Sulfate
ASTM C 131	Resistance to Abrasion of Small Size Coarse Aggregate by Use of the Los Angeles Machine
ASTM C 136	Sieve Analysis of Fine and Coarse Aggregates
AASHTO T 182	Coating and Stripping of Bitumen-Aggregate Mixtures

MATERIAL REQUIREMENTS

ASTM D 946	Penetration-Graded Asphalt-Cement for Use in Pavement Construction
ASTM D 977	Emulsified Asphalt
ASTM D 1250	Petroleum Measurement Tables
ASTM D 2397	Cationic Emulsified Asphalt
ASTM D 3381	Viscosity-Graded Asphalt-Cement for Use in Pavement Construction
Asphalt Institute Manual MS-6 Table IV-3	Asphalt Pocketbook of Useful Information (Temperature-Volume Corrections for Emulsified Asphalts)

END OF ITEM P-609

ITEM P-610 STRUCTURAL PORTLAND CEMENT CONCRETE

DESCRIPTION

610-1.1 This item shall consist of **[plain][reinforced]** structural portland cement concrete, prepared and constructed in accordance with these specifications, at the locations and of the form and dimensions shown on the plans.

MATERIALS

610-2.1 GENERAL. Only approved materials, conforming to the requirements of these specifications, shall be used in the work. They may be subjected to inspection and tests at any time during the progress of their preparation or use. The source of supply of each of the materials shall be approved by the Engineer before delivery or use is started. Representative preliminary samples of the materials shall be submitted by the Contractor, when required, for examination and test. Materials shall be scored and handled to insure the preservation of their quality and fitness for use and shall be located to facilitate prompt inspection. All equipment for handling and transporting materials and concrete must be clean before any material or concrete is placed therein.

In no case shall the use of pit-run or naturally mixed aggregates be permitted. Naturally mixed aggregate shall be screened and washed, and all fine and coarse aggregates shall be stored separately and kept clean. The mixing of different kinds of aggregates from different sources in one storage pile or alternating batches of different aggregates will not be permitted.

Aggregates shall be tested for deleterious reactivity with alkalies in the cement that may cause excessive expansion of the concrete. Acceptance of aggregates shall be based upon satisfactory evidence furnished by the Contractor that the aggregates, combined with other mixture constituents, do not produce excessive expansion in the concrete. This evidence shall include service records of concrete of comparable properties under similar conditions or exposure and certified records of tests by a testing laboratory that meets the requirements of ASTM C 1077. Tests shall be made in accordance with ASTM C 1260. Test specimens shall be produced using all components (e.g. coarse aggregate, fine aggregate, cement and fly ash…) to be included in the produced concrete. If the mean expansion of the test specimens, tested in accordance with ASTM C 1260, does not exceed 0.10 % at 16 days from casting the aggregates shall be accepted. If the mean expansion at 16 days is greater than 0.10% but less than 0.15%, the aggregate may be accepted based upon satisfactory service records and acceptance of the aggregate by a State Highway Department specifically addressing Alkali-Silica Reactivity. If the expansion is greater than 0.15%, the aggregate shall not be accepted for use.

610-2.2 COARSE AGGREGATE. The coarse aggregate for concrete shall meet the requirements of ASTM C 33. Crushed stone aggregate shall have a durability factor, as determined by ASTM C 666, greater than or equal to 95. The Engineer may consider and reserve final approval of other State classification procedures addressing aggregate durability.

Coarse aggregate shall be well graded from coarse to fine and shall meet one of the gradations shown in Table 1, using ASTM C 136.

610-2.3 FINE AGGREGATE. The fine aggregate for concrete shall meet the requirements of ASTM C 33.

The fine aggregate shall be well graded from fine to coarse and shall meet the requirements of Table 2 when tested in accordance with ASTM C 136:

TABLE 1. GRADATION FOR COARSE AGGREGATE

Sieve Designation (square openings)	Percentage by Weight Passing Sieves						
	2”	1-1/2”	1”	3/4"	1/2"	3/8"	No.4
No. 4 to 3/4 in. (4.75-19.0 mm)			100	90-100		20-55	0-10
No. 4 to 1 in. (4.75-25.0 mm)		100	90-100		25-60		0-10
No. 4 to 1-1/2 in. (4.75-38.1 mm)	100	95-100		35-70		10-30	0-5

TABLE 2. GRADATION FOR FINE AGGREGATE

Sieve Designation (square openings)	Percentage by Weight Passing Sieves
3/8 inch (9.5 mm)	100
No. 4 (4.75 mm)	95-100
No. 16 (1.18 mm)	45-80
No. 30 (0.60 mm)	25-55
No. 50 (0.30 mm)	10-30
No. 100 (0.15 mm)	2-10

Blending will be permitted, if necessary, in order to meet the gradation requirements for fine aggregate. Fine aggregate deficient in the percentage of material passing the No. 50 mesh sieve may be accepted, provided that such deficiency does not exceed 5% and is remedied by the addition of pozzolanic or cementitious materials other than portland cement, as specified in 610-2.6 on admixtures, in sufficient quantity to produce the required workability as approved by the Engineer.

610-2.4 CEMENT. Cement shall conform to the requirements of **[ ]** Type **[ ]**.

* * * *

Air-entraining admixtures shall meet the requirements of ASTM C 260. Air-entraining admixtures shall be added at the mixer in the amount necessary to produce the specified air content.

Water-reducing, set-controlling admixtures shall meet the requirements of ASTM C 494, Type A, water-reducing or Type D, water-reducing and retarding. Water-reducing admixtures shall be added at the mixer separately from air-entraining admixtures in accordance with the manufacturer's printed instructions.

610-2.7 PREMOLDED JOINT MATERIAL. Premolded joint material for expansion joints shall meet the requirements of ASTM **[ ].**

* * * *

* * * *

The internal ties shall be arranged so that, when the forms are removed, no metal will show in the concrete surface or discolor the surface when exposed to weathering. All forms shall be wetted with water or with a non-staining mineral oil, which shall be applied shortly before the concrete is placed. Forms shall be constructed so that they can be removed without injuring the concrete or concrete surface. The forms shall not be removed before the expiration of at least 30 hours from vertical faces, walls, slender columns, and similar structures; forms supported by falsework under slabs, beams, girders, arches, and similar construction shall not be removed until tests indicate that at least 60% of the design strength of the concrete has developed.

610-3.9 PLACING REINFORCEMENT. All reinforcement shall be accurately placed, as shown on the plans, and shall be firmly held in position during concreting. Bars shall be fastened together at intersections. The reinforcement shall be supported by approved metal chairs. Shop drawings, lists, and bending details shall be supplied by the Contractor when required.

610-3.10 EMBEDDED ITEMS. Before placing concrete, any items that are to be embedded shall be firmly and securely fastened in place as indicated. All such items shall be clean and free from coating, rust, scale, oil, or any foreign matter. The embedding of wood shall be avoided. The concrete shall be spaded and consolidated around and against embedded items.

610-3.11 PLACING CONCRETE. All concrete shall be placed during daylight, unless otherwise approved. The concrete shall not be placed until the depth and character of foundation, the adequacy of forms and falsework, and the placing of the steel reinforcing have been approved. Concrete shall be placed as soon as practical after mixing and in no case later than 1 hour after water has been added to the mix. The method and manner of placing shall be such to avoid segregation and displacement of the reinforcement. Troughs, pipes, and chutes shall be used as an aid in placing concrete when necessary. Dropping the concrete a distance of more than 5 feet (1.5 m), or depositing a large quantity at one point, will not be permitted. Concrete shall be placed upon clean, damp surfaces, free from running water, or upon properly consolidated soil.

The concrete shall be compacted with suitable mechanical vibrators operating within the concrete. When necessary, vibrating shall be supplemented by hand spading with suitable tools to assure proper and adequate compaction. Vibrators shall be manipulated so as to work the concrete thoroughly around the reinforcement and embedded fixtures and into corners and angles of the forms. The vibration at any joint shall be of sufficient duration to accomplish compaction but shall not be prolonged to the point where segregation occurs. Concrete deposited under water shall be carefully placed in a compact mass in its final position by means of a tremie, a closed bottom dump bucket, or other approved method and shall not be disturbed after being deposited.

610-3.12 CONSTRUCTION JOINTS. When the placing of concrete is suspended, necessary provisions shall be made for joining future work before the placed concrete takes its initial set. For the proper bonding of old and new concrete, such provisions shall be made for grooves, steps, keys, dovetails, reinforcing bars or other devices as may be prescribed. The work shall be arranged so that a section begun on any day shall be finished during daylight of the same day. Before depositing new concrete on or against concrete that has hardened, the surface of the hardened concrete shall be cleaned by a heavy steel broom, roughened slightly, wetted, and covered with a neat coating of cement paste or grout.

610-3.13 EXPANSION JOINTS. Expansion joints shall be constructed at such points and of such dimensions as may be indicated on the drawings. The premolded filler shall be cut to the same shape as that of the surfaces being joined. The filler shall be fixed firmly against the surface of the concrete already in place in such manner that it will not be displaced when concrete is deposited against it.

610-3.14 DEFECTIVE WORK. Any defective work discovered after the forms have been removed shall be immediately removed and replaced. If any dimensions are deficient, or if the surface of the concrete is bulged, uneven, or shows honeycomb, which in the opinion of the Engineer cannot be repaired satisfactorily, the entire section shall be removed and replaced at the expense of the Contractor.

610-3.15 SURFACE FINISH. All exposed concrete surfaces shall be true, smooth, and free from open or rough spaces, depressions, or projections. The concrete in horizontal plane surfaces shall be brought flush with the finished top surface at the proper elevation and shall be struck-off with a straightedge and floated. Mortar finishing

shall not be permitted, nor shall dry cement or sand-cement mortar be spread over the concrete during the finishing of horizontal plane surfaces.

When directed, the surface finish of exposed concrete shall be a rubbed finish. If forms can be removed while the concrete is still green, the surface shall be pointed and wetted and then rubbed with a wooden float until all irregularities are removed. If the concrete has hardened before being rubbed, a carborundum stone shall be used to finish the surface. When approved, the finishing can be done with a rubbing machine.

610-3.16 CURING AND PROTECTION. All concrete shall be properly cured and protected by the Contractor. The work shall be protected from the elements, flowing water, and from defacement of any nature during the building operations. The concrete shall be cured as soon as it has sufficiently hardened by covering with an approved material. Water-absorptive coverings shall be thoroughly saturated when placed and kept saturated for a period of at least 3 days. All curing mats or blankets shall be sufficiently weighted or tied down to keep the concrete surface covered and to prevent the surface from being exposed to currents of air. Where wooden forms are used, they shall be kept wet at all times until removed to prevent the opening of joints and drying out of the concrete. Traffic shall not be allowed on concrete surfaces for 7 days after the concrete has been placed.

610-3.17 DRAINS OR DUCTS. Drainage pipes, conduits, and ducts that are to be encased in concrete shall be installed by the Contractor before the concrete is placed. The pipe shall be held rigidly so that it will not be displaced or moved during the placing of the concrete.

610-3.18 COLD WEATHER PROTECTION. When concrete is placed at temperatures below 40°F (4°C), the Contractor shall provide satisfactory methods and means to protect the mix from injury by freezing. The aggregates, or water, or both, shall be heated in order to place the concrete at temperatures between 50°F and 100°F (10°C and 38°C).

Calcium chloride may be incorporated in the mixing water when directed by the Engineer. Not more than 2 pounds (908 grams) of Type 1 nor more than 1.6 pounds (726 grams) of Type 2 shall be added per bag of cement. After the concrete has been placed, the Contractor shall provide sufficient protection such as cover, canvas, framework, heating apparatus, etc., to enclose and protect the structure and maintain the temperature of the mix at not less than 50°F (10°C) until at least 60% of the designed strength has been attained.

610-3.19 FILLING JOINTS. All joints that require filling shall be thoroughly cleaned, and any excess mortar or concrete shall be cut out with proper tools. Joint filling shall not be started until after final curing and shall be done only when the concrete is completely dry. The cleaning and filling shall be carefully done with proper equipment and in a manner to obtain a neat looking joint free from excess filler.

METHOD OF MEASUREMENT

610-4.1 Portland cement concrete shall be measured by the number of cubic yards (cubic meters) of concrete complete in place and accepted. In computing the yardage of concrete for payment, the dimensions used shall be those shown on the plans or ordered by the Engineer. No measurements or other allowances shall be made for forms, falsework, cofferdams, pumping, bracing, expansion joints, or finishing of the concrete. No deductions in yardage shall be made for the volumes of reinforcing steel or embedded items.

610-4.2 Reinforcing steel shall be measured by the calculated theoretical number of pounds (kg) placed, as shown on the plans, complete in place and accepted. The unit weight used for deformed bars shall be the weight of plain square or round bars of equal nominal size. If so indicated on the plans, the poundage to be paid for shall include the weight of metal pipes and drains, metal conduits and ducts, or similar materials indicated and included.

BASIS OF PAYMENT

610-5.1 Payment shall be made at the contract unit price per cubic yard (cubic meter) for structural portland cement concrete and per pound (kg) for reinforcing steel. These prices shall be full compensation for furnishing all

materials and for all preparation, delivery and installation of these materials, and for all labor, equipment, tools, and incidentals necessary to complete the item.

Payment will be made under:

Item P-610-5.1 Structural Portland Cement Concrete -–- per cubic yard (cubic meter)

Item P-610-5.1 Steel Reinforcement -– -per pound (kg)

TESTING REQUIREMENTS

ASTM C 31 Making and Curing Test Specimens in the Field

ASTM C 39 Compressive Strength of Cylindrical Concrete Specimens

ASTM C 136 Sieve Analysis of Fine and Coarse Aggregates

ASTM C 138 Density (Unit Weight), Yield, and Air Content (Gravimetric) of Concrete

ASTM C 143 Slump of Hydraulic Cement Concrete

ASTM C 231 Air Content of Freshly Mixed Concrete by the Pressure Method

ASTM C 666 Resistance of Concrete to Rapid Freezing and Thawing

ASTM C 1077 Laboratories Testing Concrete and Concrete Aggregates for Use in Construction and Criteria for Laboratory Evaluation

ASTM C 1260 Potential Alkali Reactivity of Aggregates (Mortar-Bar Method)

MATERIAL REQUIREMENTS

ASTM A 184 Specification for Fabricated Deformed Steel Bar or Rod Mats for Concrete Reinforcement

ASTM A 185 Steel Welded Wire Fabric, Plain, for Concrete Reinforcement

ASTM A 497 Steel Welded Wire Fabric, Deformed, for Concrete Reinforcement

ASTM A 615 Deformed and Plain Billet-Steel Bars for Concrete Reinforcement

ASTM A 704 Welded Steel Plain Bars or Rod Mats for Concrete Reinforcement

ASTM C 33 Concrete Aggregates

ASTM C 94 Ready-Mixed Concrete

ASTM C 150 Portland Cement

ASTM C 171 Sheet Materials for Curing Concrete

ASTM C 172 Sampling Freshly Mixed Concrete

ASTM C 260 Air-Entraining Admixtures for Concrete

ASTM C 309	Liquid Membrane-Forming Compounds for Curing Concrete
ASTM C 494	Chemical Admixtures for Concrete
ASTM C 595	Blended Hydraulic Cements
ASTM C 618	Coal Fly Ash and Raw or Calcined Natural Pozzolan for Use as a Mineral Admixture in Concrete
ASTM D 1751	Specification for Preformed Expansion Joint Fillers for Concrete Paving and Structural Construction (Non-extruding and Resilient Bituminous Types)
ASTM D 1752	Specification for Preformed Sponge Rubber and Cork Expansion Joint Fillers for Concrete Paving and Structural Construction
AASHTO T 26	Quality of Water to be Used in Concrete

END OF ITEM P-610

ITEM P-620 RUNWAY AND TAXIWAY PAINTING

DESCRIPTION

620-1.1 This item shall consist of the painting of numbers, markings, and stripes on the surface of runways, taxiways, and aprons, in accordance with these specifications and at the locations shown on the plans, or as directed by the Engineer.

MATERIALS

620-2.1 MATERIALS ACCEPTANCE. The Contractor shall furnish manufacturer's certified test reports for materials shipped to the project. The certified test reports shall include a statement that the materials meet the specification requirements. The reports can be used for material acceptance or the Engineer may perform verification testing. The reports shall not be interpreted as a basis for payment. The Contractor shall notify the Engineer upon arrival of a shipment of materials to the site.

620-2.2 PAINT. Paint shall be **[Waterborne, Epoxy, Methacrylate, or Solvent-base]** in accordance with the requirements of paragraph 620-2.2 **[ ]**. Paint shall be furnished in **[ ]** in accordance with Federal Standard No 595.

*** * * \

Organic yellow, other colors, and tinting as required to meet color standard. Epoxy resin shall be 75 to 79 percent.

(2) Epoxy Content. Component A. The weight per epoxy equivalent, when tested in accordance with ASTM D 1652 shall be the manufacturer's target plus or minus 50.

(3) Amine Number. Component B. When tested in accordance with ASTM D 2074 shall be the manufacturer's target plus or minus 50.

(4) Prohibited Materials. The manufacturer shall certify that the product does not contain mercury, lead, hexavalent chromium, halogenated solvents, nor any carcinogen, as defined in 29 CFR 1910.1200.

(5) Daylight Directional Reflectance:

(a) White: The daylight directional reflectance of the white paint shall not be less than 75 percent (relative to magnesium oxide), when tested in accordance with Federal Test Method Standard No. 141D/GEN, Method 6121.

(b) Yellow: The daylight directional reflectance of the yellow paint shall not be less than 38 percent (relative to magnesium oxide), when tested in accordance with Federal Test Method Standard No. 141D/GEN. The x and y values shall be consistent with the Federal Hegman yellow color standard chart for traffic yellow standard 33538, or shall be consistent with the tolerance listed below:

x .462	x .470	x .479	x .501
y .438	y .455	y .428	y .452

(6) Accelerated Weathering.

(a) Sample Preparation. Apply the paint at a wet film thickness of 0.013 inch (0.33 mm) to four 3 by 6 inch (8 by 15 cm) aluminum panels prepared as described in Federal Test Method Standard No. 141D/GEN, Method 2013. Air dry the sample 48 hours under standard conditions.

(b) Testing Conditions. Test in accordance with ASTM G 15453 using both Ultra Violet (UV-B) Light and condensate exposure, 72 hours total, alternating 4 hour UV exposure at 60 degree C, and 4 hours condensate exposure at 40 degrees C.

(c) Evaluation. Remove the samples and condition for 24 hours under standard conditions. Determine the directional reflectance and color match using the procedures in paragraph 620-2.2b(5) above. Evaluate for conformance with the color requirements.

(7) Volatile Organic Content. Determine the volatile organic content in accordance with 40 CFR Part 60 Appendix A, Method 24.

(8) Dry Opacity. Use Procedure B, Method B of Method 4121 of Federal Test Method Standard No. 141D/GEN. The wet film thickness shall be 0.015 inch (0.12 mm). The minimum opacity for white and colors shall be 0.92.

(9) Abrasion Resistance. Subject the panels prepared in paragraph 620-2.2b(6) to the abrasion test in accordance with ASTM D 968, Method A, except that the inside diameter of the metal guide tube shall be from 0.747 to 0.750 inch (18.97 to 19.05 mm). Five liters of unused sand shall be used for each test panel. The test shall be run on two test panels. [Note: five liters of sand weighs 17.5 lb. (7.94 kg).] Both baked and weathered paint films shall require not less than 150 liters of sand for the removal of the paint films.

(10) Hardness, Shore. Hardness shall be at least 80 when tested in accordance with ASTM D 2240.

c. METHACRYLATE. Paint shall be a two component, minimum 99 percent solids-type system conforming to the following:

(1) Pigments. Component A. Percent by weight.

(a) White:
Titanium Dioxide, ASTM D 476, type II shall be 6 percent minimum.
Methacrylate resin shall be 18 percent minimum.

(b) Yellow and Colors:
Titanium Dioxide, ASTM D 476, type II shall be 6 percent minimum.
Organic yellow, other colors, and tinting as required to meet color standard.
Methacrylate resin shall be 18 percent minimum.

(2) Prohibited Materials. The manufacturer shall certify that the product does not contain mercury, lead, hexavalent chromium, halogenated solvents, nor any carcinogen, as defined in 29 CFR 1910.1200.

(3) Daylight Directional Reflectance:

(a) White: The daylight directional reflectance of the white paint shall not be less than 80 percent (relative to magnesium oxide), when tested in accordance with Federal Test Method Standard No. 141D/GEN, Method 6121.

(b) Yellow: The daylight directional reflectance of the yellow paint shall not be less than 55 percent (relative to magnesium oxide), when tested in accordance with Federal Test Method Standard No. 141D/GEN. The x and y values shall be consistent with the Federal Hegman yellow color standard chart for traffic yellow standard 33538, or shall be consistent with the tolerance listed below:

x .462	x .470	x .479	x .501
y .438	y .455	y .428	y .452

(4) Accelerated Weathering.

(a) Sample Preparation. Apply the paint at a wet film thickness of 0.013 inch (0.33 mm) to four 3 by 6 inch (8 by 15 cm) aluminum panels prepared as described in Method 2013 of Federal Test Method Standard No. 141D/GEN. Air dry the sample 48 hours under standard conditions.

(b) Testing Conditions. Test in accordance with ASTM G 53 154 using both Ultra Violet (UV-B) Light and condensate exposure, 72 hours total, alternating 4 hour UV exposure at 60 degree C, and 4 hours condensate exposure at 40 degrees C.

(c) Evaluation. Remove the samples and condition for 24 hours under standard conditions. Determine the directional reflectance and color match using the procedures in paragraph 620-2.2c(3) above. Evaluate for conformance with the color requirements.

(5) Volatile Organic Content. Determine the volatile organic content in accordance with 40 CFR Part 60 Appendix A, Method 24.

(6) Dry Opacity. Use Procedure B, Method B of Method 4121 of Federal Test Method Standard No. 141D/GEN. The wet film thickness shall be 0.015 inch (0.12 mm). The minimum opacity for white and colors shall be 0.92.

(7) Abrasion Resistance. Subject the panels prepared in paragraph 620-2.2c(4) to the abrasion test in accordance with ASTM D 968, Method A, except that the inside diameter of the metal guide tube shall be from 0.747 to 0.750 inch (18.97 to 19.05 mm). Five liters of unused sand shall be used for each test panel. The test shall

be run on two test panels. [Note: five liters of sand weighs 17.5 lb. (7.94 kg).] Both baked and weathered paint films shall require not less than 150 liters of sand for the removal of the paint films.

(8) Hardness, Shore. Hardness shall be at least 80 when tested in accordance with ASTM D 2240.

d. SOLVENT-BASE. Paint shall meet the requirements of Federal Specification **[A-A-2886A Type I or Type II]**.

* * * *

Gradation					
		Type IV-A		Type IV-B	
U.S. Sieve No.	Microns	Minimum percent passing by weight	Maximum percent passing by weight	Minimum percent passing by weight	Maximum percent passing by weight
PAN					

* * * *

* * * *

* * * *

All emptied containers shall be returned to the paint storage area for checking by the Engineer. The containers shall not be removed from the airport or destroyed until authorized by the Engineer.

* * * *

ASTM C 146	Chemical Analysis of Glass Sand
ASTM C 371	Wire-Cloth Sieve Analysis of Nonplastic Ceramic Powders
ASTM D 92	Test Method for Flash and Fire Points by Cleveland Open Cup
ASTM D 711	No-Pick-Up Time of Traffic Paint
ASTM D 968	Standard Test Methods for Abrasion Resistance of Organic Coatings by Falling Abrasive
ASTM D 1213-54(1975)	Test Method for Crushing Resistance of Glass Spheres
ASTM D 1652	Test Method for Epoxy Content of Epoxy Resins
ASTM D 2074	Test Method for Total Primary, Secondary, and Tertiary Amine Values of Fatty Amines by Alternative Indicator Method
ASTM D 2240	Test Method for Rubber Products-Durometer Hardness
ASTM G 15453	Operating Light and Water-Exposure Apparatus (Fluorescent Light Apparatus UV-Condensation Type) for Exposure of Nonmetallic Materials.
Federal Test Method Standard No. 141D/GEN	Paint, Varnish, Lacquer and Related Materials; Methods of Inspection, Sampling and Testing

MATERIAL REQUIREMENTS

ASTM D 476	Specifications for Dry Pigmentary Titanium Dioxide Pigments Products
Code of Federal Regulations	40 CFR Part 60, Appendix A – Definition of Traverse Point Number and Location
Code of Federal Regulations	29 CFR Part 1910.1200 – Hazard Communications
FED SPEC TT-B-1325C	Beads (Glass Spheres) Retroreflective
AASHTO M 247	Glass Beads Used in Traffic Paints
FED SPEC TT-P-1952D	Paint, Traffic and Airfield Marking, Waterborne
Commercial Item Description (CID) A-A-2886A	Paint, Traffic, Solvent Based
FED STD 595	Colors used in Government Procurement

END OF ITEM P-620

Intentionally Left Blank

ITEM P-626 EMULSIFIED ASPHALT SLURRY SEAL SURFACE TREATMENT

DESCRIPTION

626-1.1 This item shall consist of a mixture of emulsified asphalt, mineral aggregate, and water properly proportioned, mixed, and spread on an asphalt prepared underlying course or existing wearing course in accordance with these specifications and shall conform to the dimensions shown on the plans or as directed by the Engineer.

MATERIALS

626-2.1 AGGREGATE. The aggregate shall consist of sound and durable manufactured sand, slag, crusher fines, crushed stone, or a combination thereof. The aggregate shall be clean and free from vegetable matter, dirt, and other deleterious substances. The aggregate shall have a sand equivalent of not less than **[45]** percent when tested in accordance with ASTM D 2419. The aggregate shall show a loss of not more than **[35]** percent when tested in accordance with ASTM C 131. The sodium sulfate soundness loss shall not exceed **[12]** percent, or the magnesium soundness loss shall not exceed **[20]** percent after 5 cycles when tested in accordance with ASTM C 88. Aggregate shall be 100 percent crushed.

* * * *

provide considerable skid resistance and may be considered for most projects. A finer Type II gradation will provide sufficient friction and will not cause excessive tire wear. Tire wear appears to be related to the amount a material passing the #4 and retained on the #8 sieve. We recommend that no more than 10-15% be retained on the #8 sieve.

* * * *

mineral filler shall be considered as part of the aggregate.

626-2.3 EMULSIFIED ASPHALT. The emulsified asphalt shall conform to the requirements of ASTM D **[977 and/or 2397]** and shall be SS, CSS, CQS, or QS type emulsions.

* *

The cement mixing test is waived for these slurry type emulsions. The emulsified asphalt shall be either anionic or cationic, whichever is best suited to the aggregate and job conditions to be encountered. The type of emulsified asphalt to use will be determined by the mix design. The Engineer shall specify the type of emulsion and the controlling specification, which shall be from ASTM D 977 or ASTM D 2397, and the material shall be SS, CSS, CQS, or QS.

* *

626-2.4 WATER. All water used in making the slurry shall be potable and free from harmful soluble salts and chemicals.

COMPOSITION AND APPLICATION

626-3.1 COMPOSITION. The slurry seal shall consist of a mixture of emulsified asphalt, mineral aggregate, and water.

626-3.2 JOB MIX FORMULA. No slurry seal for payment shall be placed until a mix design has been approved by the Engineer. The mix design shall be developed by a laboratory with experience in designing slurry seal mixes and a signed copy shall be submitted in writing by the Contractor to the Engineer at least 10 days prior to the start of operations.

The laboratory report (mix design) shall indicate the proportions of aggregates, mineral filler (min. and max.), water (min. and max.) and asphalt emulsion based on the dry aggregate weight. It shall also report the quantitative effects of moisture content on the unit weight of the aggregate (bulking effects). The mix design shall be in effect until modified in writing by the Engineer. Should a change in sources of materials be made, a new mix design shall be established before the new material is used.

* *

The main items of design in emulsified asphalt slurry seals are aggregate gradation, emulsified asphalt content, and consistency of the mixture. The aggregates, emulsified asphalt, and water should form a creamy-textured slurry that, when spread, will flow ahead of the strike-off squeegee. This will allow the slurry to flow down into the cracks in the pavement and fill them before the strike-off passes over. Technical Bulletin No. 111, Outline Guide Design Procedure for Slurry Seal, and publication A 105 Recommended Performance Guidelines published by the International Slurry Surfacing Association (ISSA) contains information to aid designers of slurry mixes.

* *

The Contractor shall submit to the Engineer for approval a complete mix design on the materials proposed for use, prepared and certified by an approved laboratory**.** Compatibility of the aggregate, emulsion, mineral filler, and other additives shall be verified by the mix design. The mix design shall be made with the same aggregate and grade of emulsified asphalt that the Contractor will provide on the project. At a minimum the required tests and values needed are as follows:

	DESCRIPTION	SPECIFICATION
ISSA TB-100	Wet Track Abrasion Loss One Hour Soak	50 g/ft² Max (538 g/m²)
ISSA TB-115	Determination of Slurry Seal Compatibility	Pass

626-3.3 APPLICATION RATE. Unless otherwise specified, the slurry seal shall be applied to at the application rates shown in Table 3 for that gradation of material used.

TABLE 3. APPLICATION RATES

	Type I	Type II	Type III	Type IA
Pounds of mixture per square yard	8 - 12	12 - 20	18 - 30	10 – 16
Kilograms of mixture per square meter	4.3 - 6.5	6.5 - 10.9	9.8 - 16.3	5.4 – 8.6

The rate of application shall not vary more than ± 2 pounds per square yard (±1.1 kilograms per square meter).

626-3.4 TEST SECTIONS. Test sections shall be placed prior to the start of the slurry seal work in the presence of the Engineer. The test area will be designated by the Engineer and will be located on the existing pavement. Test strips shall be made by each machine after calibration. Samples of the slurry seal may be taken and the mix consistency verified by using ISSA TB-106 Slurry Seal Consistency test. In addition, the proportions of the individual materials may be verified by the Engineer by using the calibration information provided after machine calibration. If any test does not meet specification requirements, additional tests shall be made at the expense of the Contractor, until an acceptable test strip is placed.

CONSTRUCTION METHODS

626-4.1 WEATHER LIMITATIONS. The slurry seal shall not be applied if either the pavement or air temperature is below 50 °F (10 °C) and falling but may be applied when both pavement and air temperature are above 45 °F (7 °C) and rising. No slurry seal shall be applied when there is danger that the finished product will freeze before 24 hours. The mixture shall not be applied when weather conditions prolong opening to traffic beyond a reasonable time.

* * * *

forward and reverse speed of the machine during application of the slurry seal, with a self-loading device, with opposite side driver stations, all part of original equipment manufacturer design.

The aggregate shall be prewetted immediately prior to mixing with the emulsion. The mixing unit of the mixing chamber shall be capable of thoroughly blending all ingredients. No excessive mixing shall be permitted. The mixing machine shall be equipped with a fines feeder that provides an accurate metering device or method to introduce a predetermined proportion of mineral filler into the mixer at the same time and location that the aggregate is fed into the mixer.

The mixing machine shall be equipped with a water pressure system and fog-type spray bar adequate for complete fogging of the surface with an application of 0.05 to 0.10 gallon per square yard (0.23 to 0.45 liter per square meter) preceding the spreading equipment.

Sufficient machine storage capacity to mix properly and apply a minimum of 5 tons (4 500 kg) of the slurry shall be provided. Proportioning devices shall be calibrated prior to placing the slurry seal.

b. Slurry Spreading Equipment. The mixture shall be spread uniformly by means of a conventional surfacing spreader box attached to the mixer and equipped to agitate and spread the material evenly throughout the box. A front seal shall be provided to insure no loss of the mixture at the surface contact point. The rear seal shall act as the final strike-off and shall be adjustable. The spreader box and rear strike-off shall be so designed and operated that a uniform consistency is achieved to produce a free flow of material to the rear strike-off. The spreader box shall have suitable means provided to side shift the box to compensate for variations in the pavement geometry. A burlap drag or other approved screed may be attached to the rear of the spreader box to provide a uniform mat.

c. Auxiliary Equipment. Other tools or equipment such as brushes, hand squeegees, hose equipment, tank trucks, water distributors and flushers, power blowers, barricades, etc., shall be provided as required.

d. Roller. The roller, if required, shall be a self-propelled pneumatic-tired roller capable of exerting a contact pressure during rolling of 50 pounds per square inch (350 000 Newton's per square meter). It shall be equipped with a water spray system, to be used if the slurry is picking up on the tires during rolling.

e. Tack Coat and Distributor. Normally a tack coat is not required unless the surface to be covered is extremely dry and raveled or is concrete or brick. If required, the tack coat should consist of one part emulsified asphalt and three parts water. The emulsified asphalt may be the same as that used in the mix. Pressure distributors used for application of the diluted asphalt emulsion tack coat shall be self-propelled, equipped with pneumatic tires, and capable of uniformly applying 0.05 to 0.15 gallon per square yard (0.23 to 0.68 liter per square meter) of the diluted emulsion over the required width of application. Distributors shall be equipped with tachometers, pressure gages, and volume-measuring devices. The tack coat shall be applied at least 2 hours before the slurry seal but within the same day.

626-4.3 EQUIPMENT CALIBRATION. Each slurry mixing unit to be used on the project shall be calibrated in the presence of the Engineer prior to construction. Previous calibration documentation covering the exact materials to be used may be accepted by the Engineer provided they were made during the calendar year. The documentation shall include an individual calibration of each material at various settings, which can be related to the machine's metering devices. No machine will be allowed to work on the project until the calibration has been completed and/or accepted.

626-4.4 PREPARATION OF EXISTING SURFACE. Prior to placing the tack coat and slurry seal coat, unsatisfactory areas shall be repaired and the surface shall be cleaned of dust, dirt, or other loose foreign matter, grease, oil, excessive rubber accumulation, or any type of objectionable surface film. Any standard cleaning method will be acceptable except that water flushing will not be permitted in areas where considerable cracks are present in the pavement surface.

Any painted stripes or markings on the surface of the runways or taxiways to be treated, shall be removed.

Cracks wider than 1/4 inch (6 mm) shall be cleaned with compressed air, and sealed with a compatible crack sealer prior to applying the slurry seal. Cracks wider than 3/4 inch (19 mm) should be pre-filled and sealed with the slurry mixture prior to surfacing. Cracks that show evidence of vegetation shall be cleaned and treated with an approved herbicide.

626-4.5 APPLICATION OF SLURRY SEAL COAT. The surface shall be prewet by fogging ahead of the slurry spreader box. Water used in prewetting the surface shall be applied at such a rate that the entire surface is damp with no apparent flowing water in front of the slurry spreader box. The slurry mixture shall be of the desired consistency when deposited on the surface, and no additional elements shall be added. Total time of mixing shall not exceed 2 minutes. A sufficient amount of slurry shall be carried in all parts of the spreader box at all times so that complete coverage of all surface voids and cracks is obtained. Care shall be taken not to overload the spreader box that shall be towed at a slow and uniform rate not to exceed 5 miles per hour (8 kilometers per hour). No lumping, balling, or unmixed aggregate shall be permitted. No segregation of the emulsion and fines from the coarse aggregate will be permitted. If the coarse aggregate settles to the bottom of the mix, the slurry shall be removed from the pavement surface. A sufficient amount of slurry shall be fed into the box to keep a full supply against the full width of the spreader box. The mixture shall not be permitted to overflow the sides of the spreader box. No breaking of the emulsion will be allowed in the spreader box. The finished surface shall have no more than four (4) tear or drag marks greater than 1/2 inch (13 mm) wide and 4 inches (100 mm) long in any 12 foot by 22 foot (25 sq. meter) section. It shall have no tear or drag marks greater than 1 inch (25 mm) wide and 3 inches (15 mm) long.

The finished surface shall have no transverse ripples of 1/4 inch (6 mm) or more in depth, as measured with a 10-foot (3 meter) straight edge laid upon the surface.

Adjacent lanes shall be lapped at the edges a minimum of 2 inches (50 mm) with a maximum of 4 inches (100 mm) to provide complete sealing at the overlap. Construction longitudinal and transverse joints shall be neat and uniform without buildup, uncovered areas, or unsightly appearance. All joints shall have no more than 1/4 inch (6 mm) difference in elevation when measured across with a 10 foot (3 meter) straight edge.

* * * *

Upon completion of the project, the Contractor shall sweep the finished surface with a conventional power rotary broom, to remove any potential loose material from the surface. The material removed by sweeping shall be disposed of in a manner satisfactory to the Engineer.

* *

The cured slurry shall have a homogeneous appearance, fill all cracks, adhere firmly to the surface and have a skid resistant texture. The slurry seal will not stop shrinkage and other large thermal cracks from reflecting back through the new slurry surface.

* *

626-4.6 EMULSION MATERIAL (CONTRACTORS RESPONSIBILITY). Samples of the emulsion that the Contractor proposes to use, together with a statement as to its source, shall be submitted, and approval shall be obtained before using such material. The Contractor shall submit to the Engineer a manufacturer's certified report for each consignment of the emulsion. The manufacturer's certified report shall not be interpreted as a basis for final acceptance. All such reports shall be subject to verification by testing samples of the emulsion as received for use on the project.

METHOD OF MEASUREMENT

626-5.1 The emulsified asphalt shall be measured by the **[gallon (liter)] [ton (kg)]**. Only the actual quantity of undiluted emulsified asphalt will be measured for payment.

626-5.2 Aggregate shall be measured by the ton (kg) of dry aggregate.

[626-5.3 Crack sealing shall be measured by the linear foot (meter) of cracks sealed.]

[626-5.4 Surface repair shall be measured by the ton (kg) or square measurement of material placed.]

[626-5.5 Paint and rubber removal shall be measured by the linear foot (meter) or square measurement.]

BASIS OF PAYMENT

626-6.1 Payment shall be made at the contract unit price per **[gallon (liter)] (ton (kg)]** for the emulsified asphalt and at the contract price per ton (kg) for aggregate **[and the contract unit price for crack sealing per linear foot] [and the contract unit price for surface repair per ton (kg) or square measurement] [and the contract unit price for paint and rubber removal per lineal foot (meter) or square measurement]**.

These prices shall be full compensation for furnishing all materials, for preparing, mixing, and applying these materials, and for all labor, equipment, tools, and incidentals necessary to complete the item.

Payment will be made under:

Item P-626-6.1	Emulsified Asphalt for Slurry Coat—per [gallon (liter)] [ton (kg)]
Item P-626-6.2	Aggregate—per ton (kg) of dry aggregate.
[Item P-626-6.3	Emulsified Asphalt for Tack Coat—per [gallon (liter)] [ton (kg)]]
[Item P-626-6.4	Crack sealing — per linear [feet] (meter)]

[Item P-626-6.5 Surface Repair—per [ton] (kg) or square measurement]

[Item P-626-6.6 Paint and Rubber removal—per linear foot (meter) or square measurement (meter)]

TESTING REQUIREMENTS

ASTM C 88	Soundness of Aggregates by Use of Sodium Sulfate or Magnesium Sulfate
ASTM C 117	Materials Finer than No. 200 Sieve in Mineral Aggregates by Washing
ASTM C 128	Density, Relative Density (Specific Gravity), and Absorption of Fine Aggregate
ASTM C 131	Resistance to Degradation of Small Size Coarse Aggregate by Abrasion and Impact in the Los Angeles Machine
ASTM C 136	Sieve or Screen Analysis of Fine and Coarse Aggregates
ASTM D 75	Sampling Aggregates
ASTM D 2419	Sand Equivalent Value of Soils and Fine Aggregate
ISSA A 105	Recommended Performance Guidelines
ISSA TB-100	Wet Track Abrasion Loss
ISSA TB-106	Slurry Seal Consistency
ISSA TB 111	Outline Guide Design Procedure for Slurry Seal
ISSA TB-115	Determination of Slurry Seal Compatibility

MATERIAL REQUIREMENTS

ASTM D 242	Mineral Filler for Bituminous Paving Mixtures
ASTM D 977	Emulsified Asphalt
ASTM D 2397	Cationic Emulsified Asphalt

END OF ITEM P-626

ITEM P-630 REFINED COAL TAR EMULSION WITHOUT ADDITIVES, SLURRY SEAL SURFACE TREATMENT

630-1.1 GENERAL. This item shall consist of a mixture of refined coal tar emulsion, mineral aggregate, and water properly proportioned, mixed, and applied as a slurry seal on new or existing (aged) asphalt concrete pavement.

MATERIALS

630-2.1 Refined Coal Tar Emulsion. A refined coal tar emulsion prepared from a high temperature refined coal tar conforming to the requirements of ASTM specification D 490 for grade 11-12. The use of oil and water gas tar is not allowed. Base refined coal tar emulsion must conform to all requirements of Federal Specification R-P-355.

630-2.2 Aggregate. The aggregate shall be washed dry silica sand or boiler slag free of dust, trash, clay, organic materials or other deleterious substances. The aggregate shall meet the gradation requirements of Table 1, when tested in accordance with ASTM C 136.

TABLE 1. GRADATION OF AGGREGATES*

Sieve Size		Percent Retained	
		Minimum	Maximum
#20 or coarser	(0.850 mm)	0	2
#30	(0.600 mm)	0	12
#40	(0.425 mm)	2	60
#50	(0.300 mm)	5	60
#70	(0.212 mm)	5	60
#100	(0.150 mm)	5	30
#140	(0.106 mm)	0	10
#200	(0.075 mm)	0	2
Finer than #200		0	0.3

* Table 1 represents the maximum range of aggregate gradations.
In all cases the refined coal tar emulsion supplier is to give written approval of the aggregate used in the mix design.

603-2.3 Water. Water for mixing shall be potable, free of harmful soluble salts and at least 50ºF (10ºC).

603-2.4 Crack Sealant. Crack sealant shall be certified for compatibility with the refined coal tar emulsion by the manufacturer of the refined coal tar emulsion, and approved by the engineer.

603-2.5 Oil Spot Primer. Oil spot primer shall be certified for compatibility with the refined coal tar emulsion by the manufacturer of the refined coal tar emulsion, and approved by the engineer.

603-2.6 Pavement Primer. Pavement primer shall be certified for compatibility with the refined coal tar emulsion by the manufacturer of the refined coal tar emulsion, and approved by the engineer.

COMPOSITION AND APPLICATION

630-3.1 Composition. The refined coal tar emulsion seal coat is to consist of a mixture of refined coal tar emulsion, water and aggregate, and be proportioned as shown in Table 2. The composition must have written approval of the coal tar emulsion manufacturer.

630-3.2 Job Mix Formula. The contractor shall submit the recommended formulation of water, emulsion, aggregate and application rate proposed for use to a testing laboratory together with sufficient materials to verify the

formulation at least **[ ]** days prior to the start of operations. The mix design shall be within the range shown in Table 2. No seal coat shall be produced for payment until a job mix formula has been approved by the Engineer. The formulation shall pass the fuel resistance test in Appendix A.

The job mix formula for each mixture shall be in effect until modified in writing by the Engineer.

* * * *

The test section shall be used to verify the adequacy of the mix design and to determine the application rate. The same equipment and method of operations shall be used on the test section as will be used on the remainder of the work.

If the test section should prove to be unsatisfactory, the necessary adjustments to the job mix formula, mix composition, application rate, placement operations, and equipment shall be made. Additional test sections shall be placed and evaluated, if required. Full production shall not begin without the Engineer's approval. Acceptable test sections shall be paid for in accordance with paragraph 630-7.1.

* * * *

the specified rate of application. The spreader box shall have an adjustable width. The box shall be kept clean; coal-tar emulsion and aggregate build-up on the box shall not be permitted.

d. Hand Squeegee or Brush Application. The use of hand spreading application shall be restricted to places not accessible to the mechanized equipment or to accommodate neat trim work at curbs, etc. Material that is applied by hand shall meet the same standards as that applied by machine.

e**. Calibration.** The Contractor shall furnish all equipment, materials and labor necessary to calibrate the equipment. It shall be calibrated to assure that it will produce and apply a mix that conforms to the job mix formula. Commercial equipment should be provided with a method of calibration by the manufacturer. All calibrations shall be made with the approved job materials prior to applying the seal coat to the pavement. A copy of the calibration test results shall be furnished to the Engineer.

630-4.3 Preparation of Existing Asphalt Pavement Surfaces. Existing asphalt pavements indicated to be seal coated shall be prepared as follows:

- Patch bituminous pavement surfaces that have been softened by petroleum derivatives or have failed due to any other cause. Remove damaged pavement to the full depth of the damage and replace with new bituminous concrete similar to that of the existing pavement. If a solvent containing cold-applied material is used, complete patching a minimum of 90 days prior to the planned application of the sealer to permit solvent to escape before sealing.

- Remove all vegetation and debris from cracks to a minimum depth of 1″. If extensive vegetation exists treat the specific area with a concentrated solution of a water-based herbicide approved by the engineer. Fill all cracks, ignoring hairline cracks (< 1/4″ wide) with a crack sealant. Wider cracks (over 1½″ wide (38.4 mm)), along with soft or sunken spots, indicate that the pavement or the pavement base should be repaired or replaced as stated above.

- Clean pavement surface immediately prior to placing the prime coat or seal coat by sweeping, flushing well with water leaving no standing water, or a combination of both, so that it is free of dust, dirt, grease, vegetation, oil or any type of objectionable surface film.

- Remove oil or grease that has not penetrated the asphalt pavement by scraping or by scrubbing with a detergent, then wash thoroughly with clean water. After cleaning, treat these areas with the oil spot primer.

- To insure adhesion to sound but oxidized pavements, mix and apply a prime coat of a type and at a rate recommended by the coal tar emulsion manufacturer, after all loose aggregate is removed.

630-4.4 Preparation of New Asphalt Pavement Surfaces. New asphalt pavements indicated to be seal coated shall be prepared as follows:

- Cure new asphalt pavement surfaces so that there is no concentration of oils on the surface.

- A period of at least 60 days at +70ºF daytime temperatures must elapse between the placement of a hot mixed asphalt concrete surface course and the application of the seal coat.

- Perform a water-break-free test to confirm that the surface oils have degraded and dissipated. (Cast one gallon of clean water out over the surface. The water should sheet out and wet the surface uniformly without crawling or showing oil rings.) If asphalt does not pass this test, additional time must be allowed for extra curing and retesting prior to sealing.

- Clean pavement surface immediately prior to placing the prime coat or seal coat by sweeping, flushing well with water leaving no standing water, or a combination of both, so that it is free of dust, dirt, grease, vegetation, oil or any type of objectionable surface film.

- Where oil spot priming is needed, remove oil or grease that has not penetrated the asphalt pavement by scraping or by scrubbing with a detergent, then wash thoroughly with clean water. After cleaning, treat these areas with the oil spot primer.

630-4.5 Mixing. Blend the coal tar emulsion mixture in the equipment described in paragraph 630-4.2 using the ingredients described in Table 2. The mixing must produce a smooth homogeneous mixture of uniform consistency. (Consult coal tar emulsion supplier for its recommended order of addition of the ingredients.) During the entire mixing and application process, no breaking, segregating or hardening of the emulsion, nor balling or lumping of the sand is to be permitted. Continue to agitate the seal coat mixture in the mixing tank at all times prior to and during application so that a consistent mix is available for application.

Small additional increments of water may be needed to provide a workable consistency, but in no case is the water content to exceed the specified amount.

630-4.6 Application of Slurry Seal Coat. The aggregate filled slurry seal coat shall be applied at a uniform rate determined in paragraph 630-3.4.

In order to provide maximum adhesion, the pavement shall be dampened with a fog spray of water if recommended by the supplier. No standing water shall remain on the surface.

If a prime coat is required, mix and apply the prime coat as specified in paragraph 630-4.3 for existing pavements or paragraph 630-4.4 for new pavements.

Apply the first coat uniformly to obtain the rate determined in paragraph 630-3.4.

Each coat shall be allowed to dry and cure initially before applying any subsequent coats. The initial drying shall allow evaporation of water of the applied mixture, resulting in the coating being able to sustain light foot traffic. The initial curing shall enable the mixture to withstand vehicle traffic without damage to the seal coat.

Apply the second coat in the same manner as outlined for the first coat.

Additional coats shall be applied over the entire surface as directed by the engineer.

The finished surface shall present a uniform texture.

The final coat shall be allowed to dry a minimum of eight hours in dry daylight conditions before opening to traffic, and initially cure enough to support vehicular traffic without damage to the seal coat.

Where marginal weather conditions exist during the eight hour drying time, additional drying time shall be required. The length of time shall be as specified by the supplier. The surface shall be checked after the additional drying time for trafficability before opening the section to vehicle traffic.

Where striping is required, the striping paint utilized shall meet the requirements of P-620, shall be compatible with the seal coat and as recommended by the coal tar emulsion manufacturer.

QUALITY CONTROL

630-5.1 CONTRACTOR'S CERTIFICATION. The Contractor shall furnish the manufacturer's certification that each consignment of emulsion shipped to the project meets the requirements of Federal specification R-P-355, except that the water content shall not exceed 50 percent. The certification shall also indicate the solids and ash content of the emulsion and the date the tests were conducted. The certification shall be delivered to the Engineer prior to the beginning of work. The manufacturer's certification for the emulsion shall not be interpreted as a basis for final acceptance. Any certification received shall be subject to verification by testing samples received for project use.

The Contractor shall also furnish a certification demonstrating a minimum of three years' experience in the application of coal-tar emulsion seal coats.

630-5.2 INSPECTION. The Owner shall have an independent technical consultant on the job site at the beginning of operations for application of coal-tar emulsion seal coats. The consultant shall have knowledge of the materials, procedures, and equipment described in this specification and shall assist the Contractor regarding proper mixing of the component materials and application of the seal coat. The consultant shall have a minimum of 3 years' experience in the use of coal-tar seal coats. Documentation of this experience shall be furnished to the Engineer prior to the start of operations. The cost of the technical consultant shall be paid for by the Owner.

630-5.3 SAMPLING. A minimum of one sample per day shall be tested for the properties of Table 2. A random sample of approximately one-quart of the composite mix will be obtained daily by the contractor and stored in a glass container. The containers shall be sealed against contamination and retained in storage by the Owner for a period of six months. Samples shall be stored at room temperature and not be subjected to freezing temperatures.

A sample of undiluted coal-tar emulsion shall be obtained from each consignment shipped to the job.

630-5.4 ENGINEER'S RECORDS. The Engineer will keep an accurate record of each batch of materials used in the formulation of the seal coat.

METHOD OF MEASUREMENT

630-6.1 The refined coal tar emulsion shall be measured by the **[gallon (liter)] [ton (kg)]**. Only the actual quantity of undiluted refined coal tar emulsion will be measured for payment.

630-6.2 Aggregate shall be measured by the ton (kg) of dry aggregate.

BASIS OF PAYMENT

630-7.1 Payment shall be made at the contract unit price per **[gallon (liter)] (ton (kg)]** for the refined coal tar emulsion and at the contract price per ton (kg) for aggregate.

These prices shall be full compensation for furnishing all materials, preparing, mixing, and applying these materials, and for all labor, equipment, tools, and incidentals necessary to complete the item.

Payment will be made under:

Item P-630-7.1	Refined Coal Tar Emulsion for Slurry Coat—per [gallon (liter)] [ton (kg)]
Item P-630-7.2	Aggregate—per ton (kg) of dry aggregate.

TESTING REQUIREMENTS

ASTM C 67	Sampling and Testing Brick and Structural Clay Tile
ASTM C 136	Sieve or Screen Analysis of Fine and Coarse Aggregates
ASTM D 160	Practice of Sampling Bituminous Materials
ASTM D 2939	Standard Test Methods for Emulsified Bitumens used as Protective Coatings.

MATERIAL REQUIREMENTS

ASTM D 490	Standard Specification for Road Tar

ASTM D 692	Standard Specification for Coarse Aggregate for Bituminous Paving Mixtures
ASTM C 3699	Kerosene
ASTM D 4866	Standard Performance Specification for Coal Tar Pitch Emulsion Pavement Sealer Mix Formations Containing Mineral Aggregates and Optional Polymeric Admixtures
ASTM D 5727	Emulsified Refined Coal Tar (Mineral Colloid Type)
FED SPEC R-P-355	Pitch, Coal-tar Emulsion (Coating for Bituminous Pavements) ASTM D 5727 Emulsified Refined Coal Tar (Mineral Colloid Type)

APPENDIX A

FUEL RESISTANCE TEST

ITEM P-630

FUEL RESISTANCE TEST ITEM P-630
TEST METHODS CRITERION

1. Scope

This method determines the resistance of the coal tar emulsion seal coat to kerosene.

2. Apparatus

2.1 2 6″ X 6″ square 16 gauge sheet metal masks with a 4″ × 4″ square center removed.
2.2 6″ X 6″ unglazed white ceramic tile with an absorption rate of 10-18 percent (determined in accordance with ASTM C 67.
2.3 Brass ring, 2″ diameter and 2″ high.
2.4 Kerosene meeting requirements of ASTM D 3699.
2.5 Silicone rubber sealant.

3. Procedure

3.1 Immerse the ceramic tile in distilled water for a minimum of ten minutes.
3.2 Remove excess water from the tile to produce a damp surface before applying the seal coat.
3.3 Using the mask described in 2.1 apply one layer of the coal tar emulsion mixture to the tile. Spread even with the top of the mask using a spatula or other straight edge.
3.4 Allow the sample to cure for 96 hours at 77 ± 2 degrees F. and 50 ± 10 percent relative humidity.
3.5 Position a second mask on top of the first mask.
3.6 Apply a second coat of coal tar emulsion mixture. Spread even with the top of the second mask.
3.7 Cure as in step 3.4.
3.8 After curing, affix the brass ring to the seal coat on the tile with silicone rubber sealant.
3.9 Fill the brass ring with kerosene.
3.10 After 24 hours, remove the kerosene from the brass ring, blot dry and immediately examine the film for softness and loss of adhesion. Immediately after the film is examined, break the tile in half, exposing that part of the tile whose film was subjected to the kerosene.
3.11 Evaluate for penetration of kerosene through the sealer and loss of adhesion.

4. Report

4.1 Report the results as pass or fail. Visible evidence of leakage or discoloration shall constitute failure of the test.

Criterion: A “pass” rating in the fuel resistance test is required.

END OF ITEM P-630

ITEM P-631 REFINED COAL TAR EMULSION WITH ADDITIVES, SLURRY SEAL SURFACE TREATMENT

631-1.1 GENERAL. This item shall consist of a mixture of refined coal tar emulsion, mineral aggregate, additives, and water properly proportioned, mixed and applied as a slurry seal on new or existing (aged) asphalt concrete pavement.

MATERIALS

631-2.1 Refined Coal Tar Emulsion. A refined coal tar emulsion prepared from a high temperature refined coal tar conforming to the requirements of ASTM specification D 490 for grade 11-12. The use of oil and water gas tar is not allowed. Base refined coal tar emulsion must conform to all requirements of Federal Specification R-P-355.

631-2.2 Aggregate. The aggregate shall be washed dry silica sand or boiler slag free of dust, trash, clay, organic materials or other deleterious substances. The aggregate shall meet the gradation in Table 1, when tested in accordance with ASTM C 136.

TABLE 1. GRADATION OF AGGREGATES*

Sieve Size		Percent Retained	
		Minimum	Maximum
#20 or coarser	(0.850 mm)	0	2
#30	(0.600 mm)	0	12
#40	(0.425 mm)	2	60
#50	(0.300 mm)	5	60
#70	(0.212 mm)	5	60
#100	(0.150 mm)	5	30
#140	(0.106 mm)	0	10
#200	(0.075 mm)	0	2
Finer than #200		0	0.3

* Table 1 represents the maximum range of aggregate gradations.
In all cases the refined coal tar emulsion supplier is to give written approval of the aggregate used in the mix design.

631-2.3 Additive. As specified by the coal tar emulsion manufacturer.

* * * *

631-2.5 Crack Sealant. Crack sealant shall be certified for compatibility with the refined coal tar emulsion by the manufacturer of the refined coal tar emulsion, and approved by the engineer.

631-2.6 Oil Spot Primer. Oil spot primer shall be certified for compatibility with the refined coal tar emulsion by the manufacturer of the refined coal tar emulsion, and approved by the engineer.

631-2.7 Pavement Primer. Pavement primer shall be certified for compatibility with the refined coal tar emulsion by the manufacturer of the refined coal tar emulsion, and approved by the engineer.]

COMPOSITION AND APPLICATION

631-3.1 Composition. The refined coal tar emulsion seal coat is to consist of a mixture of refined coal tar emulsion, water, additive and aggregate, and be proportioned as shown in Table 2. The composition must have written approval of the coal tar emulsion manufacturer.

631-3.2 Job Mix Formula. The contractor shall submit the recommended formulation of water, emulsion, aggregate and application rate proposed for use to a testing laboratory together with sufficient materials to verify the formulation at least **[ ]** days prior to the start of operations. The mix design shall be within the range shown in Table 2. No seal coat shall be produced for payment until a job mix formula has been approved by the Engineer. The formulation shall pass the fuel resistance test in Appendix A.

The job mix formula for each mixture shall be in effect until modified in writing by the Engineer.

* * * *

Some specifications covering this type of coating have allowed sand loadings in excess of 10 pounds per gallon of refined coal tar emulsion. These coatings have not performed well in the field due to poor fuel resistance and loss of adhesion and are not recommended.

* * * *

The mix tank shall have a mechanically powered, full-sweep, mixer with sufficient power to move and homogeneously mix the entire contents of the tank.

The distributor shall be equipped with a positive placement pump so that a constant pressure can be maintained on the mixture to the spray nozzles.

b. Mixing Equipment. The mixing machine shall have a continuous flow mixing unit capable of accurately delivering a predetermined proportion of aggregate, water, and emulsion, and of discharging the thoroughly mixed product on a continuous basis. The mixing unit shall be capable of thoroughly blending all ingredients together and discharging the material to the spreader box without segregation.

c. Spreading Equipment. Spreading equipment shall be a mechanical-type squeegee distributor attached to the mixing machine, equipped with flexible material in contact with the surface to prevent loss of slurry from the spreader box. It shall be maintained to prevent loss of slurry on varying grades and adjusted to assure uniform spread. There shall be a lateral control device and a flexible strike-off capable of being adjusted to lay the slurry at the specified rate of application. The spreader box shall have an adjustable width. The box shall be kept clean; coal-tar emulsion and aggregate build-up on the box shall not be permitted.

d. Hand Squeegee or Brush Application. The use of hand spreading application shall be restricted to places not accessible to the mechanized equipment or to accommodate neat trim work at curbs, etc. Material that is applied by hand shall meet the same standards as that applied by machine.

e. Calibration. The Contractor shall furnish all equipment, materials and labor necessary to calibrate the equipment. It shall be calibrated to assure that it will produce and apply a mix that conforms to the job mix formula. Commercial equipment should be provided with a method of calibration by the manufacturer. All calibrations shall be made with the approved job materials prior to applying the seal coat to the pavement. A copy of the calibration test results shall be furnished to the Engineer.

631-4.3 Preparation Of Existing Asphalt Pavement Surfaces. Existing asphalt pavements indicated to be seal coated shall be prepared as follows:

- Patch bituminous pavement surfaces that have been softened by petroleum derivatives or have failed due to any other cause. Remove damaged pavement to the full depth of the damage and replace with new bituminous concrete similar to that of the existing pavement. If a solvent containing cold-applied material is used, complete patching a minimum of 90 days prior to the planned application of the sealer to permit solvent to escape before sealing.

- Remove all vegetation and debris from cracks to a minimum depth of 1″. If extensive vegetation exists treat the specific area with a concentrated solution of a water-based herbicide approved by the engineer. Fill all cracks, ignoring hairline cracks (< 1/4″ wide) with a crack sealant. Wider cracks (over 1½″ wide (38.4 mm)), along with soft or sunken spots, indicate that the pavement or the pavement base should be repaired or replaced as stated above.

- Clean pavement surface immediately prior to placing the prime coat or seal coat by sweeping, flushing well with water leaving no standing water, or a combination of both, so that it is free of dust, dirt, grease, vegetation, oil or any type of objectionable surface film.

- Remove oil or grease that has not penetrated the asphalt pavement by scraping or by scrubbing with a detergent, then wash thoroughly with clean water. After cleaning, treat these areas with the oil spot primer.

- To insure adhesion to sound but oxidized pavements, mix and apply a prime coat of a type and at a rate recommended by the coal tar emulsion manufacturer, after all loose aggregate is removed.

631-4.4 Preparation Of New Asphalt Pavement Surfaces. New asphalt pavements indicated to be seal coated shall be prepared as follows:

- Cure new asphalt pavement surfaces so that there is no concentration of oils on the surface.
- A period of at least 60 days at +70ºF daytime temperatures must elapse between the placement of a hot mixed asphalt concrete surface course and the application of the seal coat.
- Perform a water-break-free test to confirm that the surface oils have degraded and dissipated. (Cast one gallon of clean water out over the surface. The water should sheet out and wet the surface uniformly without crawling or showing oil rings.) If asphalt does not pass this test, additional time must be allowed for extra curing and retesting prior to sealing.
- Where oil spot priming is needed, remove oil or grease that has not penetrated the asphalt pavement by scraping or by scrubbing with a detergent, then wash thoroughly with clean water. After cleaning, treat these areas with the oil spot primer.
- To ensure adhesion to sound but oxidized pavements, mix and apply a prime coat of a type and at a rate recommended by the coal tar emulsion manufacturer, after all loose aggregate is removed.

631-4.5 MIXING. Blend the coal tar emulsion mixture in the equipment described in paragraph 631-4.2 using the ingredients described in Table 2. The mixing must produce a smooth homogeneous mixture of uniform consistency. (Consult coal tar emulsion supplier for its recommended order of addition of the ingredients.) During the entire mixing and application process, no breaking, segregating or hardening of the emulsion, nor balling or lumping of the sand is to be permitted. Continue to agitate the seal coating mixture in the mixing tank at all times prior to and during application so that a consistent mix is available for application.

Small additional increments of water may be needed to provide a workable consistency, but in no case is the water content to exceed the specified amount.

631-4.6 Application of Slurry Seal Coat. The aggregate filled slurry seal coat shall be applied at a uniform rate determined in paragraph 631-3.4.

In order to provide maximum adhesion, the pavement shall be dampened with a fog spray of water if recommended by the supplier. No standing water shall remain on the surface.

If a prime coat is required, mix and apply the prime coat as specified in paragraph 631-4.3 for existing pavements or paragraph 631-4.4 for new pavements.

Apply the first coat uniformly to obtain the rate determined in paragraph 631-3.4.

Each coat shall be allowed to dry and cure initially before applying any subsequent coats. The initial drying shall allow evaporation of water of the applied mixture, resulting in the coating being able to sustain light foot traffic. The initial curing shall enable the mixture to withstand vehicle traffic without damage to the seal coat.

Apply the second coat in the same manner as outlined for the first coat.

Additional coats shall be applied over the entire surface as directed by the engineer.

The finished surface shall present a uniform texture.

The final coat shall be allowed to dry a minimum of eight hours in dry daylight conditions before opening to traffic, and initially cure enough to support vehicular traffic without damage to the seal coat.

Where marginal weather conditions exist during the eight hour drying time, additional drying time shall be required. The length of time shall be as specified by the supplier. The surface shall be checked after the additional drying time for trafficability before opening the section to vehicle traffic.

Where striping is required, the striping paint utilized shall meet the requirements of P-620, shall be compatible with the seal coat and as recommended by the coal tar emulsion manufacturer.

QUALITY CONTROL

631-5.1 CONTRACTOR'S CERTIFICATION. The Contractor shall furnish the manufacturer's certification that each consignment of emulsion shipped to the project meets the requirements of Federal specification R-P-355, except that the water content shall not exceed 50 percent. The certification shall also indicate the solids and ash content of the emulsion and the date the tests were conducted. The certification shall be delivered to the Engineer prior to the beginning of work. The manufacturer's certification for the emulsion shall not be interpreted as a basis for final acceptance. Any certification received shall be subject to verification by testing samples received for project use.

The Contractor shall also furnish a certification demonstrating a minimum of three years experience in the application of coal-tar emulsion seal coats.

631-5.2 INSPECTION. The Owner shall have an independent technical consultant on the job site at the beginning of operations for application of coal-tar emulsion seal coats. The consultant shall have knowledge of the materials, procedures, and equipment described in this specification and shall assist the Contractor regarding proper mixing of the component materials and application of the seal coat. The consultant shall have a minimum of 3 years experience in the use of coal-tar seal coats. Documentation of this experience shall be furnished to the Engineer prior to the start of operations. The cost of the technical consultant shall be paid for by the Owner.

631-5.3 SAMPLING. A minimum of one sample per day shall be tested for the properties of Table 2. A random sample of approximately one-quart of the composite mix will be obtained daily by the contractor and stored in a glass container. The containers shall be sealed against contamination and retained in storage by the Owner for a period of six months. Samples shall be stored at room temperature and not be subjected to freezing temperatures.

A sample of undiluted coal-tar emulsion shall be obtained from each consignment shipped to the job.

631-5.4 ENGINEER'S RECORDS. The Engineer will keep an accurate record of each batch of materials used in the formulation of the seal coat.

METHOD OF MEASUREMENT

631-6.1 The refined coal tar emulsion with additives shall be measured by the **[gallon (liter)] [ton (kg)]**. Only the actual quantity of undiluted refined coal tar emulsion with additives will be measured for payment.

631-6.2 Aggregate shall be measured by the ton (kg) of dry aggregate.

BASIS OF PAYMENT

631-7.1 Payment shall be made at the contract unit price per **[gallon (liter)] (ton (kg)]** for the refined coal tar emulsion with additives and at the contract price per ton (kg) for aggregate.

These prices shall be full compensation for furnishing all materials, preparing, mixing, and applying these materials, and for all labor, equipment, tools, and incidentals necessary to complete the item.

Payment will be made under:

Item P-631-7.1	Refined Coal Tar Emulsion with Additives for Slurry Coat—per [gallon (liter)] [ton (kg)]
Item P-631-7.2	Aggregate—per ton (kg) of dry aggregate.

TESTING REQUIREMENTS

ASTM C 67	Sampling and Testing Brick and Structural Clay Tile
ASTM C 136	Sieve or Screen Analysis of Fine and Coarse Aggregates
ASTM D 160	Practice of Sampling Bituminous Materials
ASTM D 2939	Standard Test Methods for Emulsified Bitumens used as Protective Coatings.

MATERIAL REQUIREMENTS

ASTM D 490	Standard Specification for Road Tar
ASTM D 692	Standard Specification for Coarse Aggregate for Bituminous Paving Mixtures
ASTM C 3699	Kerosene
ASTM D 4866	Standard Performance Specification for Coal Tar Pitch Emulsion Pavement Sealer Mix Formations Containing Mineral Aggregates and Optional Polymeric Admixtures
FED SPEC R-P-355	Pitch, Coal-tar Emulsion (Coating for Bituminous Pavements) ASTM D 5727 Emulsified Refined Coal Tar (Mineral Colloid Type)

APPENDIX A

FUEL RESISTANCE TEST

ITEM P-631

FUEL RESISTANCE TEST ITEM P-631
TEST METHODS CRITERION

1. Scope

This method determines the resistance of the coal tar emulsion seal coat to kerosene.

2. Apparatus

2.1 2 6″ X 6″ square 16 gauge sheet metal masks with a 4″ × 4″ square center removed.

2.2 6″ X 6″ unglazed white ceramic tile with an absorption rate of 10-18 percent (determined in accordance with ASTM C 67.

2.3 Brass ring, 2″ diameter and 2″ high.

2.4 Kerosene meeting requirements of ASTM D 3699.

2.5 Silicone rubber sealant.

3. Procedure

3.1 Immerse the ceramic tile in distilled water for a minimum of ten minutes.

3.2 Remove excess water from the tile to produce a damp surface before applying the seal coat.

3.3 Using the mask described in 2.1 apply one layer of the coal tar emulsion mixture to the tile. Spread even with the top of the mask using a spatula or other straight edge.

3.4 Allow the sample to cure for 96 hours at 77 ± 2 degrees F. and 50 ± 10 percent relative humidity.

3.5 Position a second mask on top of the first mask.

3.6 Apply a second coat of coal tar emulsion mixture. Spread even with the top of the second mask.

3.7 Cure as in step 3.4.

3.8 After curing, affix the brass ring to the seal coat on the tile with silicone rubber sealant.

3.9 Fill the brass ring with kerosene.

3.10 After 24 hours, remove the kerosene from the brass ring, blot dry and immediately examine the film for softness and loss of adhesion. Immediately after the film is examined, break the tile in half, exposing that part of the tile whose film was subjected to the kerosene.

3.11 Evaluate for penetration of kerosene through the sealer and loss of adhesion.

4. Report

4.1 Report the results as pass or fail. Visible evidence of leakage or discoloration shall constitute failure of the fuel resistance test.

Criterion: A “pass” rating in the fuel resistance test is required prior to full production.

END OF ITEM P-631

PART VIII – FENCING

ITEM F-160 WIRE FENCE WITH WOOD POSTS (CLASSES A AND B FENCES)

DESCRIPTION

160-1.1 This item covers the requirements for furnishing materials and constructing new wire fences and gates with wood posts in accordance with the details included herein and as shown on the plans. The class of fence to be erected shall be either Class A, woven wire fencing surmounted by two strands of barbed wire, or Class B, four strands of barbed wire, as indicated on the plans and in the bid proposal.

MATERIALS

160-2 WIRE.

a. Woven Wire (Zinc-coated). The woven wire fence shall be 7-bar, 26-inch (66 cm) field fence with top and bottom wires No. 10 gauge, and filler and stay wires No. 12 1/2 gauge. Stay wires shall be spaced 6 inches (150 mm) apart. All wires shall be smooth galvanized steel wire, conforming to ASTM A 121, Type B. All wires shall be two-dip and shall be spaced as shown on the plans.

b. Barbed Wire (Zinc-coated). Zinc-coated barbed wire shall be 2-strand twisted No. 12 1/2 gauge galvanized steel wire with 4-point barbs of No. 14 gauge galvanized steel wire. All wire shall conform to ASTM A 121, Type A. The barbs shall be spaced approximately 4 inches (100 mm) apart.

c. Barbed Wire (Copper-covered). Copper-covered steel barbed wire shall conform to ASTM A 121, Type A.

d. Barbed Wire (Aluminum-coated). Aluminum-coated steel-barbed wire shall be 2-strand twisted No. 12 1/2 gauge. The 4-point barbs of No. 14 gauge aluminum-coated steel wire shall be spaced approximately 5 inches (125 mm) apart. The steel wire shall have a tensile strength of between 60,000 and 80,000 pounds per square inch (413 400 and 551 200 kPa), and the aluminum coating shall have a minimum weight of 0.30 ounce per square foot (0.07 kg/square meter) of wire surface on the No. 12 1/2 gauge line wires and 0.25 ounce per square foot (0.06 kg/square meter) of wire surface on the No. 14 gauge barbs.

e. Bracing Wire (Zinc-coated). Wire used for cable for bracing shall be No. 9 smooth galvanized soft wire.

160-2.2 GATES AND HARDWARE. Gates shall be constructed of galvanized steel tubing conforming to Fed. Spec. RR-F-191 and shall be the size shown on the plans. Heavily galvanized hinges and latches for wood posts shall be furnished with each gate. Either a bolt or lag screw hinge shall be used, and either a wing or butterfly latch shall be furnished.

160-2.3 POSTS.

a. Species. All posts shall be one of the following species of wood, unless otherwise noted in the proposal.

Group I	Group II
Cedar	Douglas-fir
Chestnut	Gum, Red
Cypress, Southern	Larch, Western
Locust, Black	Pine, Southern Yellow
Osage-orange	Pine, Lodgepole
Redwood	Tamarack

Yew, Pacific	Ash
Honeylocust	Maple, Sugar
Oak, White	Oak, Red
Mulberry	Spruce
Live Oak	

Posts of Group I may be used untreated, provided at least 75% of the wood is heartwood. Posts of less than 75% heartwood of Group I shall be given a preservative treatment for the part of the post that will have contact with the ground line in accordance with the method specified under subparagraph e(1) below. Posts of Group II shall be given a preservative treatment in accordance with the method specified under subparagraph e(2) below.

b. Quality. Posts shall be peeled, sound, straight-grained, free from decay, cracks, and splits; shakes shall not be in excess of 1/4 inch (6 mm) wide and 3 feet (90 cm) long. Checks (lengthwise separations of the wood in a generally radial direction) are permitted, provided they are not injurious.

c. Dimensions. All posts shall be of the length shown on the plans. Posts shall have the minimum top diameters shown on the plans or as specified. Sawed and split posts are acceptable in lieu of round posts provided their dimensions are such that round posts of required diameter could be turned therefrom.

d. Manufacture. Outer bark shall be completely removed from all posts including depressions. Inner bark shall be removed from all post surfaces to be treated, except inner bark may remain in depressions. The amount of wood shaved off in the removal of inner bark shall be held to a minimum.

e. Treatment.

(1) Butt treatment. All timber shall be thoroughly seasoned and dry (22% maximum moisture content) before applying preservative treatment. The treatment shall be by a process at least equal to a hot and cold bath process. The hot bath temperature shall be from 200 to 230 F (90 to 110 C) for a duration of 45 minutes, and the cold bath temperature not over 120 F (50 C) for a duration of 45 minutes. The preservative shall be either coal-gas tar or coke-oven tar creosote conforming to American Wood Preservers Association (AWPA) Specification No. 4 for Grade 1 creosote; or a 5% minimum, by weight, pentachlorophenol petroleum solution made by either mixing a liquid concentrate of pentachlorophenol in fuel oil or kerosene, or by dissolving pentachlorophenol crystals of technical purity in suitable fuel oil solvents, as specified by AWPA.

(2) Full length treatment. Posts shall be conditioned by air seasoning, steaming, or heating in oil in a manner that prevents injurious checking, splitting, or warping before treating. The treatment, care and preservative shall be in accordance with AWPA.

160-2.4 BRACES. Cleats, gate stops, and braces shall be of the size shown on the plans. They shall be of the same species and quality specified for the posts or approved by the Engineer, and they shall be free from knots larger than one-third the width of the piece. Gate stops shall be made of posts of suitable length. Braces may be made of posts of suitable length or of sawed lumber. All cleats, gate stops, and any braces in contact with the ground and for a distance of at least 6 inches (150 mm) above the ground shall be treated by the hot and cold bath process, specified herein for posts. The wire used in cable for bracing shall conform to 160-2.1e.

160-2.5 STAPLES. The staples shall be No. 9 galvanized steel wire, 1 inch (25 mm) long for hardwood posts and 1-1/2 inches (37 mm) long for use in softwood posts.

CONSTRUCTION METHODS

160-3.1 GENERAL. The fence shall be constructed in accordance with the details on the plans and as specified herein using new materials, and all work shall be performed in a workmanlike manner, satisfactory to the Engineer. Prior to the beginning of the work or upon the request of the Contractor, the Engineer shall locate the position of the work by establishing and marking the property line or fence line. When directed, the Contractor shall span the opening below the fence with barbed wire fastened to posts of extra length at locations of small natural or drainage ditches where it is not practical to conform the fence to the general contour of the ground surface. The new fence

shall be permanently tied to the terminals of existing fences whenever required by the Engineer. The finished fence shall be plumb, taut, true to line and ground contour, and complete in every detail. When directed, the Contractor shall stake down the woven wire fence at several points between posts.

When directed, in order to keep stock on adjoining property enclosed at all times, the Contractor shall arrange the work so that construction of the new fence will immediately follow the removal of existing fences. The length of unfenced section at any time shall not exceed 300 feet (90 m) or such length that the stock can be kept in the proper field. The work shall progress in this manner, and at the close of the working day, the newly constructed fence shall be tied to the unremoved existing fence. Any openings in the fence shall be guarded when stock is using the adjoining property.

160-3.2 CLEARING FENCE LINE. The site of the fence shall be sufficiently clear of obstructions, and surface irregularities shall be graded so that the fence will conform to the general contour of the ground. The fence line shall be cleared to a minimum width of 2 feet (60 cm) on each side of the centerline of the fence. This clearing shall consist of the removal of all stumps, brush, rocks, trees, or other obstructions that will interfere with proper construction of the fence. Stumps within the cleared area of the fence line shall be grubbed or excavated. The bottom of the fence shall be placed a uniform distance above ground as specified in the plans. When shown on the plans or as directed by the Engineer, the existing fences which coincide with, or are in a position to interfere with, the new fence location shall be removed by the Contractor as part of the construction work, unless such removal is listed as a separate item in the bid schedule. All holes remaining after post and stump removal shall be refilled with suitable soil, gravel, or other material acceptable to the Engineer and shall be compacted properly with tampers.

The work shall include the handling and disposal of all material cleared, of excess excavation and the removal of spoiled material regardless of the type, character, composition, or condition of such material encountered.

160-3.3 SETTING POSTS. Posts shall be set with large ends down, plumb, and in good line on the side on which the wire is to be fastened. Posts shall be set full depth and shall not be cut off to eliminate rock or other excavation. Where rock is encountered, it shall be removed, even if blasting is necessary, to provide full-depth and full-size holes. The bottoms of all posts shall be cut off square. The diameter of the holes shall be at least 6 inches (150 mm) larger than the diameter of the posts. When cleats are used on posts, the holes shall be dug large enough to accommodate them. After posts are placed and lined, the holes shall be backfilled with suitable material that shall be properly compacted by the use of tampers. The posts adjacent to end, corner, anchor, and gate posts shall be set and braced with braces and wire, as shown on the plans. No extra compensation shall be made for rock excavation. Rock excavation shall not be grounds for extension of time.

160-3.4 ANCHORING. Corner, end, gate, and adjacent intermediate posts shall be anchored, by gaining and spiking cleats to the sides of the posts, as indicated on the plans. No cleats will be required on other intermediate posts or on anchor posts.

160-3.5 BRACING. End, corner, anchor, and gate posts shall be braced by using a post of sufficient length or a piece of sawed lumber of the proper size, together with a wire cable. The wooden brace shall be gained and securely spiked into the end, corner, anchor, or gate posts and into the next intermediate posts about 6 inches (150 mm) from the top of the respective posts. A cable made of a double strand of galvanized soft wire shall be looped around the end, corner, anchor, or gate post near the ground and around the next intermediate post about 12 inches (300 mm) from the top. After the cable has been stapled in this position, it shall be twisted until tight. The staples used to hold the cable shall be not less than 1-1/2 inches (37 mm) long. The tool used for twisting the cable shall be left in placed to permit later adjustment of bracing if found necessary. Anchor posts shall be set at approximately 500-foot (150 m) intervals and braced to the adjacent posts. Posts shall be braced before the wire fencing is placed.

160-3.6 INSTALLING WIRE. The wires shall be placed on the side of the posts away from the airport or as directed. The wire fence shall be placed on the posts at the height indicated on the plans. Longitudinal wires shall be installed parallel and drawn uniformly taut. The vertical stay wires of the woven wire fencing shall be straight and vertical. At end and gate posts the woven wire and barbed wire shall be wrapped once around the post; each longitudinal wire shall be stapled at least three times and the ends of these wires shall be tied with a snug, tight twist. Each longitudinal wire shall be stapled to each intermediate post with one steel wire staple; at the corner and anchor posts, two or more stapled shall be used. The top strand of barbed wire of all fences shall be stapled with

two staples in each post. All staples shall be set diagonally with the grain of the wood and driven up tight. After the fence has been erected, the tops of the wood posts shall be sawed off with a 1-to-3 pitch. The bottom wire of the wire fencing shall clear the ground by not more than 4 inches (100 mm) or less than 1 inch (25 mm) at any place.

160-3.7 SPLICING WIRE. Wire splices in longitudinal wires will be permitted if made with an approved galvanized bolt-clamp splice or a wire splice made as follows: The end of the wires shall be carried 3 inches (75 mm) past the splice tool and wrapped around the other wire away from the tool for at least six turns in opposite directions. After the tool is removed, the space occupied by it shall be closed by pulling the ends together. The unused ends of the wires shall be cut close to make a neat, workmanlike job. Woven wire shall be spliced only at posts.

160-3.8 INSTALLING GATES. The gates shall be hung on gate fittings, as shown on the plans. Fittings on the gate posts shall be clamped, screwed, or bolted to prevent slipping. Gates shall be so erected as to swing in the direction indicated and shall be provided with gate stops, as specified or as shown on the plans. Gates shall be erected locations shown on the plans.

160-3.9 EXISTING FENCE CONNECTIONS. Wherever the new fence joins an existing fence, either at a corner or at the intersection of straight fence lines, a corner or anchor post shall be set at the junction and braced and anchored the same as herein described for corner posts.

If the connection is made at other than the corner of the new fence, the last span of the old fence shall contain a brace span.

160-3.10 CLEANING UP. The Contractor shall remove from the vicinity of the completed work all tools, buildings, equipment, etc., used during construction.

METHOD OF MEASUREMENT

160-4.1 Fences, Class A (Wood Posts) or Class B (Wood Posts), shall be measured in place from outside to outside of end posts or corner posts and shall be the length of fence actually constructed, except for the space occupied by the gates.

Driveway gates and walkway gates shall be measured in units for each gate installed and accepted.

BASIS OF PAYMENT

160-5.1 Payment will be made at the contract unit price per linear foot (meter) for Class A or Class B wire fence. This price shall be full compensation for furnishing all materials and for preparation, erection, and installation of these materials, and for all labor, equipment, tools and incidentals necessary to complete the item.

Payment will be made at the contract unit price per each for driveway or for walkway gates. This price shall be full compensation for furnishing all materials and for all preparation, erection, and installation of these materials and for all labor, equipment, tools, and necessary incidentals to complete the item.

Payment will be made under:

Item F-160-5.1 Fence, Class A—per linear foot (meter)

Item F-160-5.2 Fence, Class B—per linear foot (meter)

Item F-160-5.3 Driveway Gates—per each

Item F-160-5.4 Walkway Gates—per each

MATERIAL REQUIREMENTS

ASTM A 121	Standard Specification for Zinc Coated (Galvanized) Steel Barbed Wire
FED SPEC RR-F-191/Gen	Fencing, Wire and Post, Metal
AWPA	Specification No. 4 for Grade I Creosote

END OF ITEM F-160

Intentionally Left Blank

ITEM F-161 WIRE FENCE WITH STEEL POSTS (CLASSES C AND D FENCES)

DESCRIPTION

161-1.1 This item covers the requirements for furnishing materials and constructing new wire fences and gates with steel posts in accordance with the details included herein and as shown on the plans. The class of fence to be erected shall be either Class C, woven wire fencing surmounted by two strands of barbed wire, or Class D, four strands of barbed wire, as indicated on the plans and in the bid proposal.

MATERIALS

161-2.1 WIRE.

a. Woven Wire (Zinc-coated). The woven wire fencing shall be 7-bar, 26-inch (66 cm) field fence with top and bottom wires No. 10 gauge, and filler and stay wires No. 12 1/2 gauge. Stay wires shall be spaced 6 inches (150 mm) apart. All wire shall be smooth galvanized steel wire conforming to ASTM A 121, Type B. All wires shall be two-dip and spaced as shown on the plans.

b. Barbed Wire (Zinc-coated). Zinc-coated barbed wire shall be 2-strand twisted No. 12 1/2 gauge galvanized steel wire with 4-point barbs of No. 14 gauge galvanized steel wire. All wire shall conform to ASTM A 121, Type A. The barbs shall be spaced approximately 4 inches (100 mm) apart.

c. Barbed Wire (Copper-covered). Copper-covered steel barbed wire shall conform to ASTM A 121, Type A.

d. Barbed Wire (Aluminum-coated). Aluminum-coated steel barbed wire shall be 2-strand twisted No. 12 1/2 gauge. The 4-point barbs of No. 14 gauge aluminum-coated steel wire shall be spaced approximately 5 inches (125 mm) apart. The steel wire shall have a tensile strength of between 60,000 and 80,000 pounds per square inch (413 400 and 551 200 kPa) and the aluminum coating shall have a minimum weight of .30 ounce per square foot (0.07 kilogram per square meters) of wire surface on the No. 12 1/2 gauge line wire and .25 ounce per square foot (0.06 kg/square meter) of wire surface on the No. 14 gauge barbs.

e. Bracing Wire (Zinc-coated). Wire used for cable for bracing shall be No. 9 smooth galvanized soft wire.

161-2.2 FENCE POSTS, GATES, RAILS, BRACES, AND ACCESSORIES. These items, when specified, shall conform to the requirements of Fed. Spec. RR-F-191 and shall be zinc-coated.

161-2.3 CONCRETE. Concrete shall be of a commercial grade with a minimum 28-day compressive strength of 2500 psi.

CONSTRUCTION METHODS

161-3.1 GENERAL. The fence shall be constructed in accordance with the details on the plans and as specified herein using new materials, and all work shall be performed in a workmanlike manner satisfactory to the Engineer. Prior to the beginning of the work or upon the request of the Contractor, the Engineer shall locate the position of the work by establishing and marking the property line or fence line. When directed, the Contractor shall span the opening below the fence with barbed wire fastened to stakes of the required length at locations of small natural or drainage ditches where it is not practical to conform the fence to the general contour of the ground surface. The new fence shall be permanently tied to the terminals of existing fences whenever required by the Engineer. The finished fence shall be plumb, taut, true to line and ground contour, and complete in every detail. When directed, the Contractor shall stake down the woven wire fence at several points between posts.

When directed, in order to keep stock on adjoining property enclosed at all times, the Contractor shall arrange the work so that construction of the new fence will immediately follow the removal of existing fences. The length of

unfenced section at any time shall not exceed 300 feet (90 m) or such length that the stock can be kept in the proper field. The work shall progress in this manner and at the close of the working day the newly constructed fence shall be tied to the existing fence. Any openings in the fence shall be guarded when stock is using the adjoining property.

161-3.2 CLEARING FENCE LINE. The site of the fence shall be sufficiently cleared of obstructions, and surface irregularities shall be graded so that the fence will conform to the general contour of the ground. The fence line shall be cleared to a minimum width of 2 feet (60 cm) on each side of the centerline of the fence. This clearing shall consist of the removal of all stumps, brush, rocks, trees, or other obstructions that will interfere with proper construction of the fence. Stumps within the cleared area of the fence shall be placed a uniform distance above ground, as specified in the plans. When shown on the plans or as directed by the Engineer, the existing fences which coincide with, or are in a position to interfere with, the new fence location shall be removed by the Contractor as a part of the construction work unless such removal is listed as a separate item in the bid schedule. All holes remaining after post and stump removal shall be refilled with suitable soil, gravel, or other material acceptable to the Engineer and shall be compacted properly with tampers.

The work shall include the handling and disposal of all material cleared, excavated or removed, regardless of the type, character, composition, or condition of such material encountered.

161-3.3 INSTALLING POSTS. All posts shall be spaced as shown on the plans. Corner, brace, anchor, end, and gate posts shall be set in concrete bases as shown on the plans. The top of the base shall be slightly above the ground surface, trowel finished, and sloped to drain. Holes of full depth and size for the concrete bases for posts shall be provided even if blasting of rock or other obstructions is necessary. All line posts may be either driven or set in dug holes to a penetration of 3 feet (90 cm). All post setting shall be done carefully and to true alignment. Dirt removed for placing posts, anchor bars, flanges, etc., shall be replaced, tamped, and leveled. When posts are driven, care shall be exercised to prevent marring or buckling of the posts. Damaged posts shall be replaced at the Contractor's expense. No extra compensation will be made for rock excavation. Rock excavation shall not be grounds for extension of time.

161-3.4 BRACING. All corner, anchor, end, and gate posts shall be braced as shown on the plans. Anchor posts shall be set at approximately 500-foot (150 meters) intervals and braced to the adjacent posts.

161-3.5 INSTALLING WIRE. All barbed wire and woven wire shall be placed on the side of the post away from the airport, or as directed, at the height indicated on the plans. The woven wire shall be carefully stretched and hung without sag and with true alignment. Care shall be taken not to stretch the wire so tightly that it will break in cold weather or pull up corner and brace posts. All horizontal wires shall be fastened securely to each post by fasteners or clips designed for use with the posts furnished. The woven wire shall be wrapped around end, corner, and gate posts, and the ends of all horizontal wires shall be tied with snug, tight twists. The wire shall be secured to prevent slipping up and down the post. Barbed wire strands shall be stretched and each strand secured to each post to prevent slipping out of line or becoming loose. At end, corner, and gate posts the barbed wire shall be securely wrapped and anchored once about the post from outside and secured against slipping by tying the ends with snug, tight twists. However, on spans of less than 100 feet (30 m) both ends of the span need not be wrapped around the posts. The bottom wire of the woven wire fencing shall clear the ground by not more than 4 inches (100 mm) or less than 1 inch (25 mm) at any place.

161-3.6 SPLICING WIRE. Splices in barbed and woven wire will be permitted if made with an approved galvanized bolt-clamp splice or a wire splice made as follows: The ends of each wire shall be carried 3 inches (75 mm) past the splice tool and wrapped around the other wire for at least six turns in opposite directions. After the tool is removed, the space occupied by it shall be closed by pulling the ends together. The unused ends of the wire shall be cut close to make a neat, workmanlike job.

161-3.7 INSTALLING GATES. The gates shall be hung on gate fittings as shown on the plans. They shall be attached in such a manner that the gate cannot be lifted off the hinges. Gates shall be erected to swing in the direction indicated and shall be provided with gate stops, as specified or as shown on the plans. Gates shall be erected at locations shown on the plans.

161-3.8 EXISTING FENCE CONNECTIONS. Wherever the new fence joins an existing fence, either at a corner or at the intersection of straight fence lines, a corner or anchor post shall be set at the junction and braced and anchored the same as herein described for corner posts.

If the connection is made at other than the corner of the new fence, the last span of the old fence shall contain a brace span.

161-3.9 CLEANING UP. The Contractor shall remove from the vicinity of the completed work all tools, buildings, equipment, etc., used during construction.

METHOD OF MEASUREMENT

161-4.1 Fences, Class C (Steel Posts), or Class D (Steel Posts), shall be measured in place from outside to outside of end posts or corner posts and shall be the length of fence actually constructed, except for the space occupied by the gates.

Driveway gates and walkway gates shall be measured in units for each gate installed and accepted.

BASIS OF PAYMENT

161-5.1 Payment shall be made at the contract unit price per linear foot (meter) for Class C or Class D wire fence. This price shall be full compensation for furnishing all materials and for all preparation, erection, and installation of these materials, and for all labor, equipment, tools, and incidentals necessary to complete the item.

Payment will be made at the contract unit price per each for driveway or for walkway gates. This price shall be full compensation for furnishing all materials and for all preparation, erection, and installation of these materials, and for all labor, equipment, tools, and incidentals necessary to complete the item.

Payment will be made under:

Item F-161-5.1	Fence, Class C—per linear foot (meter)
Item F-161-5.2	Fence, Class D—per linear foot (meter)
Item F-161-5.3	Driveway Gates—per each
Item F-161-5.4	Walkway Gates—per each

MATERIAL REQUIREMENTS

ASTM A 121	Standard Specification for Zinc Coated (Galvanized) Steel Barbed Wire
FED SPEC RR-F-191/Gen	Fencing, Wire, and Post, Metal

END OF ITEM F-161

Intentionally Left Blank

ITEM F-162 CHAIN-LINK FENCES

DESCRIPTION

162-1.1 This item shall consist of furnishing and erecting a chain-link fence in accordance with these specifications and the details shown on the plans and in conformity with the lines and grades shown on the plans or established by the Engineer.

MATERIALS

162-2.1 FABRIC. **[The fabric shall be woven with a 9-gauge [galvanized steel wire] [polyvinyl chloride (PVC)-coated steel] [aluminum alloy] [zinc-5% aluminum mischmetal] wire in a 2-inch (50 mm) mesh and shall meet the requirements of [ ].] [The fabric shall be woven from a [ ] gauge aluminum-coated steel wire in a 2-inch (50 mm) mesh and shall conform to the requirements of ASTM A 491.]**

* * * *

[Hot-Rolled Shapes (H Beams) shall meet the requirements of Group III, and be galvanized in accordance with the requirements of F 1043, Type A.]

[Aluminum Pipe shall conform to the requirements of Group IB.]

[Aluminum Shapes shall conform to the requirements of Group IIB.]

[Vinyl or polyester coated steel shall conform to the requirements of ASTM F 1043, Paragraph 7.3 Optional Supplemental Color Coating.]

[Composite posts shall conform to the strength requirements of ASTM F 1043 or ASTM F 1083. The strength loss of composite posts shall not exceed 10 percent when subjected to 3,600 hours of exposure to light and water in accordance with ASTM G 23, ASTM G 26, and ASTM G-53.]

Posts, rails, and braces furnished for use in conjunction with aluminum alloy fabric shall be aluminum alloy or composite.

Posts, rails, and braces, with the exception of galvanized steel conforming to F 1043 or ASTM F 1083, Group 1A, Type A, or aluminum alloy, shall demonstrate the ability to withstand testing in salt spray in accordance with ASTM B 117 as follows:

External: 1,000 hours with a maximum of 5% red rust.
Internal: 650 hours with a maximum of 5% red rust.

The dimensions of the posts, rails, and braces shall be in accordance with Tables I through VI of Fed. Spec. RR-F-191/3.

162-2.4 GATES. Gate frames shall consist of **[galvanized steel pipe] [polymer-coated steel pipe] [aluminum alloy pipe] [composite posts]** and shall conform to the specifications for the same material under paragraph 162-2.3. The fabric shall be of the same type material as used in the fence.

162-2.5 WIRE TIES AND TENSION WIRES. Wire ties for use in conjunction with a given type of fabric shall be of the same material and coating weight identified with the fabric type. Tension wire shall be 7-gauge marcelled steel wire with the same coating as the fabric type and shall conform to ASTM A 824.

All material shall conform to Fed. Spec. RR-F-191/4.

162-6 MISCELLANEOUS FITTINGS AND HARDWARE. Miscellaneous steel fittings and hardware for use with **[zinc-coated] [aluminum-coated] [zinc-5% aluminum-mischmetal alloy-coated]** steel fabric shall be of commercial grade steel or better quality, wrought or cast as appropriate to the article, and sufficient in strength to provide a balanced design when used in conjunction with fabric posts, and wires of the quality specified herein. **[All steel fittings and hardware shall be protected with a zinc coating applied in conformance with ASTM A 153.] [Miscellaneous aluminum fittings for use with aluminum alloy fabric shall be wrought or cast aluminum alloy.]** Barbed wire support arms shall withstand a load of 250 pounds (113 kg) applied vertically to the outermost end of the arm.

162-2.7 CONCRETE. Concrete shall be of a commercial grade with a minimum 28-day compressive strength of 2500 psi (17 240 kPa).

162-2.8 MARKING. Each roll of fabric shall carry a tag showing the kind of base metal (steel, aluminum, or aluminum alloy number), kind of coating, the gauge of the wire, the length of fencing in the roll, and the name of the manufacturer. Posts, wire, and other fittings shall be identified as to manufacturer, kind of base metal (steel, aluminum, or aluminum alloy number), and kind of coating.

CONSTRUCTION METHODS

162-3.1 CLEARING FENCE LINE. All trees, brush, stumps, logs, and other debris which would interfere with the proper construction of the fence in the required location shall be removed a minimum width of 2 feet (61 cm) on each side of the fence centerline before starting fencing operations. The cost of removing and disposing of the material shall not constitute a pay item and shall be considered incidental to fence construction.

162-3.2 INSTALLING POSTS. All posts shall be set in concrete at the required dimension and depth and at the spacing shown on the plans.

* * * *

The Engineer shall specify if tension wire is to be installed.

* * * *

ASTM A 653	Specification for Steel Sheet, Zinc-Coated (Galvanized) or Zinc-Iron Alloy-Coated (Galvannealed) by the Hot-Dip Process
ASTM A 824	Metallic-Coated Steel Marcelled Tension Wire for Use With Chain Link Fence
ASTM A 1011	Steel Sheet and Strip, Hot-Rolled, Carbon, Structural, High-Strength Low-Alloy and High-Strength Low-Alloy with Improved Formability
ASTM B 117	Standard Practice for Operating Salt Spray (Fog) Apparatus
ASTM B 221	Aluminum and Aluminum-Alloy Extruded Bars, Rods, Wire Shapes and Tubes
ASTM B 429	Aluminum-Alloy Extruded Structural Pipe and Tube
ASTM F 668	Poly(vinyl Chloride)(PVC) and other Organic Polymer-Coated Steel Chain-Link Fence Fabric
ASTM F 1043	Strength and Protective Coatings on Metal Industrial Chain Link Fence Framework
ASTM F 1083	Pipe, Steel, Hot-Dipped Zinc-coated (galvanized) Welded, for Fence Structures
ASTM F 1183	Aluminum Alloy Chain Link Fence Fabric
ASTM F 1345	Zinc-5% Aluminum-Mischmetal Alloy-Coated Steel Chain Link Fence Fabric
ASTM G 152	Operating Open Flame (Carbon-Arc) Light Apparatus for Exposure of Nonmetallic Materials
ASTM G 153	Operating Enclosed Carbon-Arc Light Apparatus for Exposure of Nonmetallic Materials
ASTM G 154	Operating Fluorescent Light Apparatus for UV Exposure of Nonmetallic Materials
ASTM G 155	Operating (Xenon- Arc) Light Apparatus for Exposure of Nonmetallic Materials
FED SPEC	Fencing, Wire and Post, Metal (Chain-Link Fence Posts, Top Rails and Braces) RR-F-191/3
FED SPEC	Fencing, Wire and Post, Metal (Chain-Link Fence Accessories) RR-F-191/4

END OF ITEM F-162

Intentionally Left Blank

ITEM F-163 WILDLIFE DETERRENT FENCE

DESCRIPTION

163-1.1 This item shall consist of furnishing and installing chain-link fence fabric underground along an existing chain link fence, constructing concrete pads at existing fence gates in accordance with these specifications and the details shown on the drawings and in conformity with the lines and grades shown on the plans or established by the Engineer.

MATERIALS

163-2.1 CHAIN LINK FENCE FABRIC. The fabric shall be woven with a 9-gauge galvanized steel wire in a 2-inch (50 mm) mesh and shall meet the requirements of ASTM A 392, Class II. The fabric shall be 5'-0" wide.

163-2.2 BARBED WIRE. Barbed wire shall be 2-strand 12-1/2 gauge zinc-coated wire with 4-point barbs and shall conform to the requirements of ASTM A 121, Class 3.

163-2.3 WIRE TIES AND TENSION WIRES. Wire fabric ties, wire ties, and tension wire for use in conjunction with a given type of fabric shall be of the same material identified with the fabric type. The tension wire shall be 7-gauge coiled spring wire coated similarly to the respective wire fabric being used.

Wire fabric ties shall be hog rings of galvanized steel wire not less than 9-gauge.

All material shall conform to Fed. Spec. RR-F-191/4.

163-2.4 MISCELLANEOUS FITTINGS AND HARDWARE. Miscellaneous steel fittings and hardware for use with zinc-coated steel fabric shall be of commercial grade steel or better quality, wrought or cast as appropriate to the article, and sufficient in strength to provide a balanced design when used in conjunction with fabric posts, and wires of the quality specified herein. All steel fittings and hardware shall be protected with a zinc coating applied in conformance with ASTM A 153.

163-2.5 CONCRETE PADS AT GATES. Concrete shall be of a commercial grade with a minimum 28-day compressive strength of 3000 psi.

163-2.6 MARKING. Each roll of fabric shall carry a tag showing the kind of base metal, kind of coating, the gauge of the wire, the length of fencing in the roll, and the name of the manufacturer. Posts, wire, and other fittings shall be identified as to manufacturer, kind of base metal, and kind of coating.

163-2.7 WEED CONTROL MATERIAL. A commercially available weed control material shall be applied at the manufacturer's recommended rate.

CONSTRUCTION METHODS

163-3.1 CLEARING FENCE LINE. All brush, stumps, logs, and other debris which would interfere with the proper construction of the fence in the required location shall be removed a minimum width of 4 feet on the side of the fence centerline before starting fencing operations. The material removed and disposed of shall not constitute a pay item and shall be considered incidental to fence construction.

163-3.2 INSTALLING FABRIC. Excavate ground to the depth required for proper installation of the fabric. Obtain Engineer's approval of depth of excavation before placing the wire fabric. Place the fabric and lap splice it to existing fence fabric and tie with wire ties at 2 foot 0 inch spacing. Cut wire fabric around fence post footing to allow proper placement. Backfill with native soil to original grade. Compact all backfill and fill to attain 90% of AASHTO T-180.

163-3.3 WEED CONTROL APPLICATION. Weed control material shall be applied over an area 3 feet wide, measured from the fence centerline, and over the wildlife fence. Apply weed control material as recommended by the manufacturer's instructions and in compliance with state and local regulations.

METHOD OF MEASUREMENT

163-4.1 CHAIN LINK FENCE FABRIC. Chain-link fence fabric shall be measured for payment by the linear foot to the nearest foot. Measurement shall be along the fence from center to center of end or corner posts, excluding the length occupied by gate openings.

163-4.2 CONCRETE PADS AT GATES. Concrete pads at gates shall be measured by the unit.

163-4.3 BORROW FILL MATERIAL. Borrow material for fill will be furnished by the Contractor. This shall be measured by the cubic yard in place.

163-4.4 WEED CONTROL APPLICATION. Shall be measured by the linear foot.

BASIS OF PAYMENT

163-5.1 CHAIN LINK FENCE FABRIC. Payment for chain-link fence fabric shall be made at the contract unit price per linear foot. This price shall be full compensation for furnishing materials, all labor (including preparation, excavation, backfill, fill, and installation), equipment, tools, and incidentals necessary to complete this item. Utility locates shall be included in this pay item.

163-5.2 CONCRETE PADS AT GATES. Payment for concrete pads at gates shall be made at the contract unit price for each pad. This price shall be full compensation for furnishing materials, all labor (including preparation, excavation, backfill, placement of concrete, reinforcing steel, and forms), equipment, tools, and incidentals necessary to complete this item.

163-5.3 BORROW FILL MATERIAL. Payment for the loading, transporting, and placing of borrow material shall be made at the contract unit price per cubic yard. This price shall be full compensation for furnishing all labor (including placement, compaction, and grading), equipment, tools, and incidentals necessary to complete this item.

163-5.4 WEED CONTROL APPLICATION. Payment for weed control application shall be made at the contract unit price per linear foot. This price shall be full compensation for furnishing materials, all labor, equipment, tools, and incidentals necessary to complete this item.

163-5.5 EXAMPLES OF DETAILS. The following drawings are examples of details for a WILDLIFE DETERRENT FENCE. The fence type and dimensions shown will vary according to specific project design requirements.

* * * *

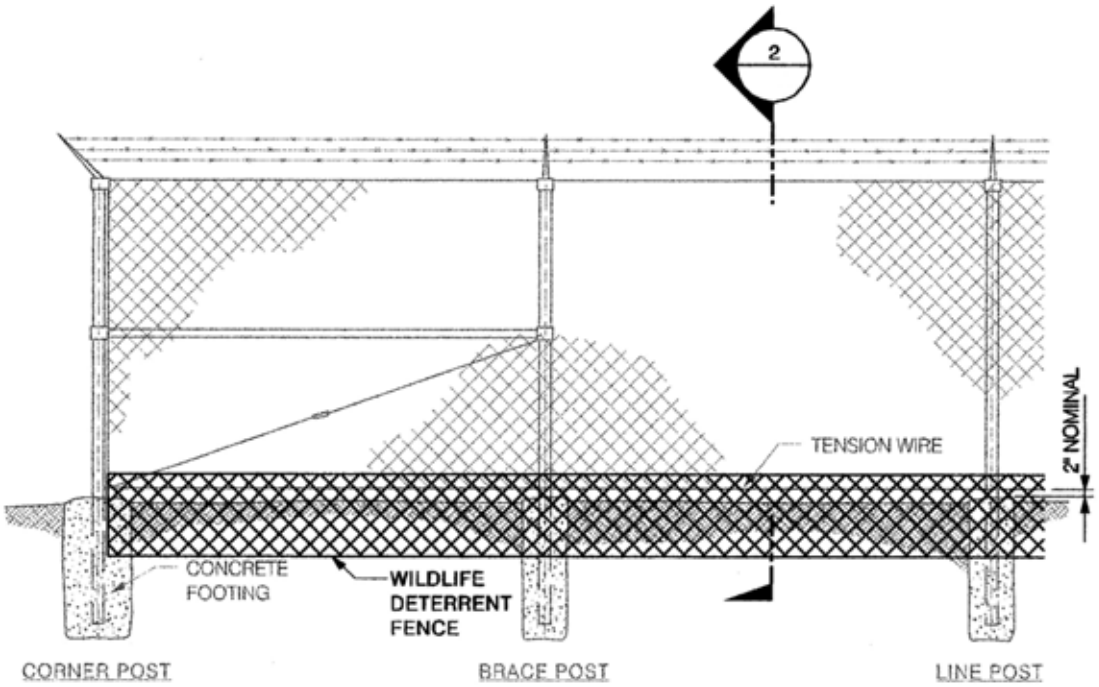

EXISTING SECURITY FENCE
WITH WILDLIFE DETERRENT FENCE

ELEVATION 1
TYPICAL NOT TO SCALE

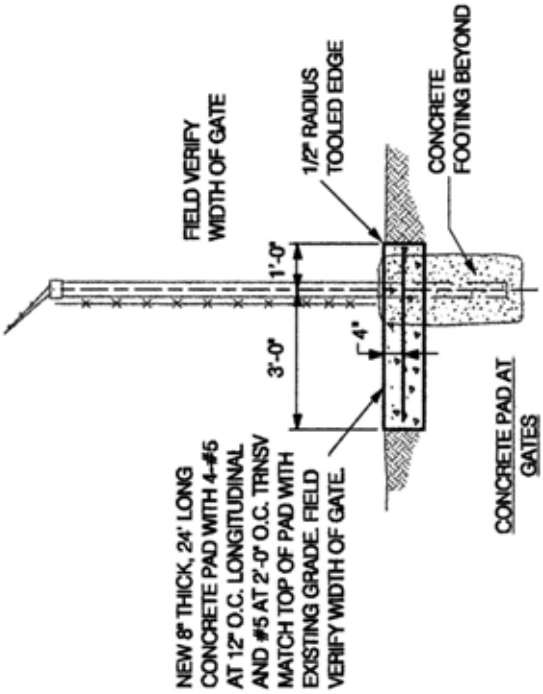

DETAIL 3
TYPICAL NOT TO SCALE

TYPICAL NOTES:

1. MAINTAIN SECURITY FENCE INTEGRITY AT ALL TIMES. DO NOT LEAVE EXCAVATION UNDER FENCE FABRIC WHICH WOULD PERMIT ACCESS.
2. DEPTH OF EXCAVATION SHALL BE INSPECTED AND APPROVED BY THE ENGINEER PRIOR TO PLACEMENT OF THE CHAIN LINK FENCE FABRIC.
3. END JOINTS BETWEEN ADJACENT SECTIONS OF WIRE FABRIC SHALL BE LAPPED 4" AND TIED WITH GALVANIZED WIRE TIES AT 2'-0" O.C. AND AT EDGES.

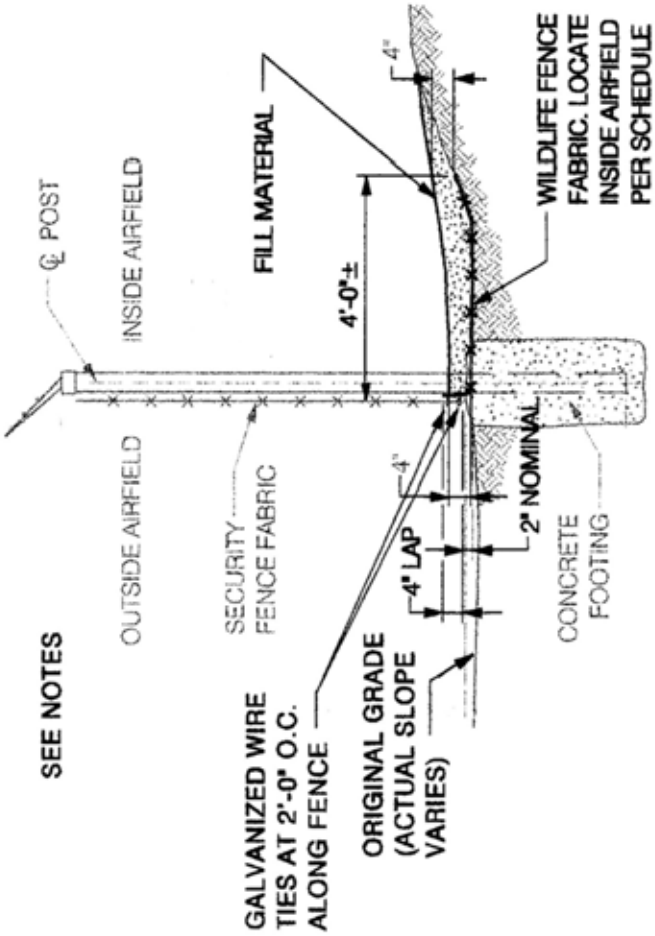

EXISTING SECURITY FENCE
WITH WILDLIFE DETERRENT FENCE

2A

SECTION
TYPICAL NOT TO SCALE

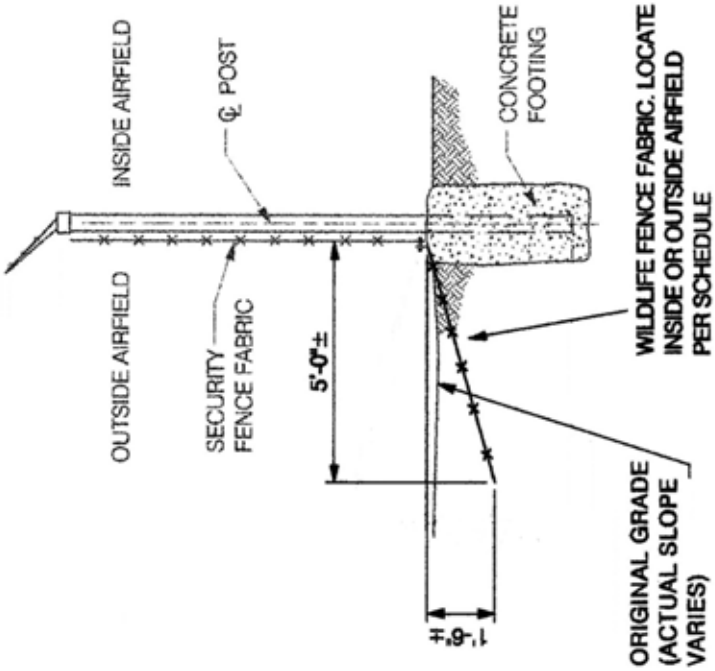

EXISTING SECURITY FENCE
WITH WILDLIFE DETERRENT FENCE
(TYPICAL EXCEPT AS SHOWN ON SECTION 2A)

2

SECTION
TYPICAL NOT TO SCALE

MATERIAL REQUIREMENTS

ASTM A 121	Zinc-Coated (Galvanized) Steel Barbed Wire
ASTM A 123	Zinc (Hot Galvanized) Coatings on Iron and Steel Products
ASTM A 153	Zinc Coating (Hot-Dip) on Iron and Steel Hardware
ASTM A 392	Zinc-Coated Steel Chain-Link Fence Fabric
ASTM A 572	High-Strength Low-Alloy Columbium-Vanadium Structural Steel
ASTM A 1011	Steel, Sheet and Strip Hot-Rolled, Carbon, Structural, High-Strength Low-Alloy and High-Strength Low-Alloy with Improved Formability
ASTM F 1043	Strength and Protective Coatings on Metal Industrial Chain Link Fence Framework
ASTM F 1083	Pipe, Steel, Hot-Dipped Zinc-coated (galvanized) Welded, for Fence Structures
AASHTO T-180	Moisture-Density Relations of Soils Using a 4.54-kg (10-lb) Rammer and a 457-mm (18-in) Drop
FED SPEC RR-F-191/3	Fencing, Wire and Post, Metal (Chain-Link Fence Posts, Top Rails and Braces)
FED SPEC RR-F-191/4	Fencing, Wire and Post, Metal (Chain-Link Fence Accessories)

END OF ITEM F-163

Intentionally Left Blank

PART IX – DRAINAGE

ITEM D-701 PIPE FOR STORM DRAINS AND CULVERTS

DESCRIPTION

701-1.1 This item shall consist of the construction of pipe culverts and storm drains in accordance with these specifications and in reasonably close conformity with the lines and grades shown on the plans.

MATERIALS

701-2.1 Materials shall meet the requirements shown on the plans and specified below.

* * * *

Poly (Vinyl Chloride) (PVC) Corrugated Sewer Pipe With a Smooth Interior and Fittings	ASTM F 949
Bituminous-Coated Corrugated Metal Pipe and Pipe Arches	AASHTO M 190
Bituminous-Coated Corrugated Aluminum Alloy Culvert Pipe	AASHTO M 190 and M 196
Bituminous-Coated Structural Plate Pipe, Pipe Arch, and Arches	AASHTO M 167 and M 243
Aluminum Alloy Structural Plate for Pipe, Pipe Arch, and Arches	AASHTO M 219
Polyvinyl Chloride (PVC) Pipe	ASTM D 3034
Corrugated Polyethylene Drainage Tubing (all types)	AASHTO M 252
Corrugated Polyethylene Pipe 300 to 1200 mm Diameter (all types)	AASHTO M 294M
Poly (Vinyl Chloride) (PVC) Profile Wall Drain Pipe and Fittings Based on Controlled Inside Diameter	AASHTO M 304

* * * *

* * * *

Pipe Corrugation Depth		Minimum Bedding Depth	
in.	mm	in.	mm
1/2	12.5	1	25.0
1	25.0	2	50.0
2	50.0	3	75.0
2-1/2	62.5	3-1/2	87.5

c. PVC and Polyethylene Pipe. For PVC and polyethylene pipe, the bedding material shall consist of coarse sands and gravels with a maximum particle size of 3/4-inch (13 mm). For pipes installed under paved areas, no more than 12 percent of the material shall pass the No. 200 (0.075 mm) sieve. For all other areas, no more than 50 percent of the material shall pass the No. 200 (0.075 mm) sieve. The bedding shall have a thickness of at least 6 inches (150 mm) below the bottom of the pipe and extend up around the pipe for a depth of not less than 50 percent of the pipe's vertical outside diameter.

701-3.3 LAYING PIPE. The pipe laying shall begin at the lowest point of the trench and proceed upgrade. The lower segment of the pipe shall be in contact with the bedding throughout its full length. Bell or groove ends of rigid pipes and outside circumferential laps of flexible pipes shall be placed facing upgrade.

Paved or partially lined pipe shall be placed so that the longitudinal center line of the paved segment coincides with the flow line.

Elliptical and elliptically reinforced pipes shall be placed with the manufacturer's top of pipe mark within five degrees of a vertical plane through the longitudinal axis of the pipe.

701-3.4 JOINING PIPE. Joints shall be made with (1) portland cement mortar, (2) portland cement grout, (3) rubber gaskets, (4) plastic gaskets, or (5) coupling bands.

Mortar joints shall be made with an excess of mortar to form a continuous bead around the outside of the pipe and shall be finished smooth on the inside. Molds or runners shall be used for grouted joints in order to retain the poured grout. Rubber ring gaskets shall be installed to form a flexible watertight seal.

a. Concrete Pipe. Concrete pipe may be either bell and spigot or tongue and groove. The method of joining pipe sections shall be such that the ends are fully entered and the inner surfaces are reasonably flush and even. Joints shall be thoroughly wetted before mortar or grout is applied.

b. Metal Pipe. Metal pipe shall be firmly joined by form fitting bands conforming to the requirements of ASTM A 760 for steel pipe and AASHTO M 196 for aluminum pipe.

c. PVC and Polyethylene Pipe. Joints for PVC and Polyethylene pipe shall conform to the requirements of ASTM D 3212 when water tight joints are required. Joints for PVC and Polyethylene pipe shall conform to the requirements of AASHTO M 304 when soil tight joints are required. Fittings for polyethylene pipe shall conform to the requirements of AASHTO M 252 or M 294M.

701-3.5 BACKFILLING. Pipes shall be inspected before any backfill is placed; any pipes found to be out of alignment, unduly settled, or damaged shall be removed and relaid or replaced at the Contractor's expense.

Material for backfill shall be fine, readily compatible soil, granular material selected from the excavation or a source of the Contractor's choosing**[, or shall meet the requirements of Item P-153].** . It shall not contain frozen lumps, stones that would be retained on a 2-inch (50.0 mm) sieve, chunks of highly plastic clay, or other objectionable material. No less than 95 percent of a granular backfill material shall pass through a 1/2 inch (12 mm) sieve, and no less than 95 percent of it shall be retained on a No. 4 (4.75 mm) sieve.

When the top of the pipe is even with or below the top of the trench, the backfill shall be compacted in layers not exceeding 6 inches (150 mm) on both sides of the pipe and shall be brought up one foot (30 cm) above the top of the

pipe or to natural ground level, whichever is greater. Care shall be exercised to thoroughly compact the backfill material under the haunches of the pipe. Material shall be brought up evenly on both sides of the pipe.

When the top of the pipe is above the top of the trench, the backfill shall be compacted in layers not exceeding 6 inches (150 mm) and shall be brought up evenly on both sides of the pipe to 1 foot (30 cm) above the top of the pipe. The width of backfill on each side of the pipe for the portion above the top of the trench shall be equal to twice the pipe's diameter of 12 feet (3.5 m), whichever is less.

For PVC and polyethylene pipe, the backfill shall be placed in two stages; first to the top of the pipe and then at least 12 inches (300 mm) over the top of the pipe. The backfill material shall meet the requirements of paragraph 701-3.2c.

All backfill shall be compacted to the density required under Item P-152.

METHOD OF MEASUREMENT

701-4.1 The length of pipe shall be measured in linear feet (meters) of pipe in place, completed, and approved. It shall be measured along the centerline of the pipe from end or inside face of structure to the end or inside face of structure, whichever is applicable. The several classes, types and size shall be measured separately. All fittings shall be included in the footage as typical pipe sections in the pipe being measured.

701-4.2 The volume of concrete for pipe cradles to be paid for shall be the number of cubic yards (cubic meters) of concrete that is completed in place and accepted.

701-4.3 The volume of rock to be paid for shall be the number of cubic yards (cubic meters) of rock excavated. No payment shall be made for the cushion material placed for the bed of the pipe.

BASIS OF PAYMENT

701-5.1 Payment will be made at the contract unit price per linear foot (meter) for each kind of pipe of the type and size designated; at the contract unit price per cubic yard (cubic meter) of concrete for pipe cradles; and at the contract unit price per cubic yard (cubic meter) for rock excavation.

These prices shall fully compensate the Contractor for furnishing all materials and for all preparation, excavation, and installation of these materials; and for all labor, equipment, tools, and incidentals necessary to complete the item.

Payment will be made under:

Item 701-5.1	[ ] inch [ ] per linear foot (meter)
Item 701-5.2	Concrete for pipe cradles—per cubic yard (cubic meter)
Item 701-5.3	Rock excavation—per cubic yard (cubic meter)

* * * *

ASTM A 761	Corrugated Steel Structural Plate, Zinc Coated, for Field-Bolted Pipe, Pipe-Arches, and Arches
ASTM A 762	Corrugated Steel-Pipe, Polymer Precoated for Sewers and Drains
ASTM A 849	Post-Applied Coatings, Pavings, and Linings for Corrugated Steel Sewer and Drainage Pipe
ASTM A 885/A 885M-96	Steel Sheet, Zinc and Aramid Fiber Composite Coated for Corrugated Steel Sewer, Culvert, and Underdrain Pipe
ASTM B 745	Corrugated Aluminum Alloy Culvert Pipe
ASTM C 14	Concrete Sewer, Storm Drain, and Culvert Pipe
ASTM C 76	Reinforced Concrete Culvert, Storm Drain, and Sewer Pipe
ASTM C 94	Ready Mixed Concrete
ASTM C 144	Aggregate for Masonry Mortar
ASTM C 150	Portland Cement
ASTM C 443	Joints for Circular Concrete Sewer and Culvert Pipe, Using Rubber Gaskets
ASTM C 506	Reinforced Concrete Arch Culvert, Storm Drain, and Sewer Pipe
ASTM C 507	Reinforced Concrete Elliptical Culvert, Storm Drain and Sewer Pipe
ASTM C 655	Reinforced Concrete D-Load Culvert, Storm Drain and Sewer Pipe
ASTM C 1433	Precast Reinforced Concrete Box Sections for Culverts, Storm Drains, and Sewers
ASTM D 1056	Flexible Cellular Materials—Sponge or Expanded Rubber
ASTM D 3034	Type PSM Poly (Vinyl Chloride) (PVC) Sewer Pipe and Fittings
ASTM D 3212	Joints for Drain and Sewer Plastic Pipes Using Flexible Elastomeric Seals
ASTM D 6690	Joint and Crack Sealants, Hot-Applied, for Concrete and Asphalt Pavements
ASTM F 477	Elastomeric Seals (Gaskets) for Joining Plastic Pipe
ASTM F 794	Poly (Vinyl Chloride) Ribbed Drain Pipe & Fittings Based on Controlled Inside Diameter
ASTM F 949	Poly (Vinyl Chloride) (PVC) Corrugated Sewer Pipe With a Smooth Interior and Fittings
AASHTO M 190	Bituminous-Coated Corrugated Metal Culvert Pipe and Pipe Arches
AASHTO M 196	Corrugated Aluminum Alloy Culverts and Underdrains

AASHTO M 198	Joints for Circular Concrete Sewer and Culvert Pipe Using Flexible Watertight Gaskets
AASHTO M 219	Aluminum Alloy Structural Plate for Pipe, Pipe-Arches, and Arches
AASHTO M 243	Field Applied Coating of Corrugated Metal Structural Plate for Pipe, Pipe-Arches, and Arches
AASHTO M 252	Corrugated Polyethylene Drainage Tubing
AASHTO M 294M	Corrugated Polyethylene Pipe, 300 to 1200 mm Diameter
AASHTO M 304	Poly (Vinyl Chloride) (PVC) Profile Wall Drain Pipe and Fittings Based on Controlled Inside Diameter

END ITEM D-701

Intentionally Left Blank

ITEM D-702 SLOTTED DRAINS

DESCRIPTION

702-1.1 This item shall consist of the construction of steel slotted drains or cast iron slotted vane drains in accordance with these specifications and in reasonably close conformity with the lines and grades shown on the plans. Type detail shall be shown on the plans.

MATERIALS

702-2.1 GENERAL. All slotted drains shall meet the requirements shown on the plans and specified below. All slotted drains shall meet specified hydraulic design requirements and shall support the loadings specified.

702-2.2 PIPE.

a. Steel slotted Drain. Pipe shall be metallic coated (galvanized or aluminized steel type II) corrugated steel type I meeting the requirements of ASTM A760. Pipe diameter and gage shall be as shown on the plans.

The corrugated steel pipe shall have a minimum of two rerolled annular ends.

b. Cast Iron Slotted Vane Drain. Polyvinyl Chloride (PVC) pipe shall meet the requirements of ASTM D 3034. Pipe diameter shall be as shown on the plans. The pipe shall have an open slot to accept the cast iron slotted vane drain castings.

702-2.3 GRATES AND CASTINGS.

a. Steel Slotted Drain. Grates shall be manufactured from ASTM A 36 or A 570, Grade 36 steel. Spacers and bearing bars (sides) shall be 3/16-inch (5 mm) material. The spacers shall be welded to each bearing bar with four 1-1/4-inch long 3/16-inch wide (32 mm long by 5 mm wide) fillet welds on each side of the bearing bar at spacings not exceeding 6 inches (150 mm). The grates shall be 6 inches (150 mm) high or as shown on the plans and shall have a maximum 1-3/4-inch (45 mm) opening in the top.

Grates shall be galvanized in accordance with ASTM A 123 except with a 2 ounce per square foot (0.61 kg per square meter) galvanized coating.

The grates shall be fillet welded to the corrugated steel pipe with a minimum weld 1 inch (25 mm) long on each side of the grate at every other corrugation. Weld areas and the heat affected zones where the slot is welded to the corrugated pipe shall be thoroughly cleaned and painted with a zinc-rich paint in accordance with repair of damaged coatings in ASTM A 760.

Each 20-foot (6.1 m) length of drain delivered to the job site shall be within the following tolerances: vertical bow +/- 3/8 inch (9.5 mm), horizontal bow +/- 5/8 inch (16 mm), twist +/- 1/2 inch (12.5 mm).

b. Cast Iron Slotted Vane Drain. Castings shall meet the requirements of ASTM A 48, Class 35B gray iron. Castings shall be furnished with no coatings.

Castings shall be designed to fit on open slots in 15-inch (380 mm) PVC pipe. Casting sections shall not exceed three feet (915 mm) in length. Casting sections shall have a built-in vane configuration with bar spacings not exceeding 6 inches (150 mm). The opening at the surface shall not exceed 3-3/4 inches (95 mm), and the vane shall be constructed on a radius so that the opening shall be less than 1-1/2 inches (38 mm) at a depth of 1-1/2 inches (38 mm) as measured vertically from the surface. Casting sections shall integrally lock into the concrete by use of top and bottoms flanges and shear tabs. Castings shall accept bolts for bolting sections together and shall accept wire for fitting to pipe.

* * * *

METHOD OF MEASUREMENT

702-4.1 The length of slotted drain shall be measured in linear feet (meters) of slotted drain in place, completed, and approved. It shall be measured along the centerline of the drain from end or inside face of structure to the end or inside face of structure, whichever is applicable. The several classes, types, and sizes shall be measured separately. All fittings shall be included in the footage as typical pipe sections being measured.

BASIS OF PAYMENT

702-5.1 Payment shall be made at the contract unit price per linear foot (meter) for each kind of slotted drain type and size designated and at the contract unit price per cubic yard (cubic meter) of concrete for backfill.

These prices shall be full compensation for all materials, all preparation, excavation and installation of these materials; and all labor, equipment, tools, and incidentals necessary to complete the item.

Payment will be made under:

Item 702-5.1 [ ] inch (mm) diameter [gage] pipe per linear foot (meter)

* * * *

END OF ITEM D-702

ITEM D-705 PIPE UNDERDRAINS FOR AIRPORTS

DESCRIPTION

705-1.1 This item shall consist of the construction of pipe drains in accordance with these specifications and in reasonably close conformity with the lines and grades shown on the plans.

MATERIALS

705-2.1 GENERAL. Materials shall meet the requirements shown on the plans and specified below.

* * * *

TABLE 1. GRADATION OF POROUS BACKFILL

Sieve Designation (square openings)	Percentage by Weight Passing Sieves	
	Porous Material No. 1	Porous Material No. 2
1-1/2 inch (38 mm)		100
1 inch (25 mm)		90 - 100
3/8 inch (9.5 mm)	100	25 - 60
No. 4 (4.75 mm)	95 – 100	5 - 40
No. 8 (2.36 mm)		0 - 20
No. 16 (1.18 mm)	45 – 80	
No. 50 (0.30 mm)	10 – 30	
No. 100 (0.15 mm)	0 – 10	

When two courses of porous backfill are specified in the plans, the finer of the materials shall conform to particle size tabulated herein for porous material No. 1. The coarser granular material shall meet the gradation given in the tabulation for porous material No. 2.

705-2.6. GRANULAR MATERIAL. Granular material used for backfilling shall conform to the requirements of ASTM D 2321 for Class IA, IB, or II materials, or shall meet the requirements of AASHTO Standard Specification for Highway Bridges Section 30.

705-2.7. FILTER FABRIC. The filter fabric shall conform to the requirements of AASHTO M 288-99, Class 2.

TABLE 2

Fabric Property	**Test Method**	**Test Requirement**
Grab Tensile Strength, lbs	**ASTM D 4632**	**125 min**
Grab Tensile Elongation %	**ASTM D 4632**	**50 min**
Burst Strength, psi	**ASTM D 3785**	**125 min**
Trapezoid Tear Strength, lbs	**ASTM D 4533**	**55 min**
Puncture Strength, lbs	**ASTM D 4833**	**40 min**
Abrasion, lbs	**ASTM D 4886**	**15 max loss**
Equivalent Opening Size	**ASTM D 4751**	**70-100**
Permittivity sec^{-1}	**ASTM D 4491**	**0.80**
Accelerated Weathering (UV Stability) (Strength Retained - %)	**ASTM D 4355 *(500 hrs exposure)**	**70**

* * * *

* * * *

b. Metal Pipe. The metal pipe shall be laid with the separate sections joined firmly together with bands, with outside laps of circumferential joints pointing upgrade, and with longitudinal laps on the sides. Any metal in the pipe or bands that is not protected thoroughly by galvanizing shall be coated with a suitable asphaltum paint.

During installation, the asphalt-protected pipe shall be handled without damaging the asphalt coating. Any breaks in the bitumen or treatment of the pipe shall be refilled with the type and kind of bitumen used in coating the pipe originally.

c. PVC or Polyethylene Pipe. PVC or polyethylene pipe shall be installed in accordance with the requirements of ASTM D 2321 or AASHTO Standard Specification for Highway Bridges Section 30. Perforations shall meet the requirements of AASHTO M 252 or M 294 Class 2, unless otherwise indicated on the plans. The pipe shall be laid accurately to line and grade.

d. All Types of Pipe. The upgrade end of pipelines, not terminating in a structure, shall be plugged or capped as approved by the Engineer.

Unless otherwise shown on the plans, a 4-inch (100 mm) bed of granular backfill material shall be spread in the bottom of the trench throughout the entire length under all perforated pipe underdrains.

Pipe outlets for the underdrains shall be constructed when required or shown on the plans. The pipe shall be laid with tight-fitting joints. Porous backfill is not required around or over pipe outlets for underdrains. All connections to other drainage pipes or structures shall be made as required and in a satisfactory manner. If connections are not made to other pipes or structures, the outlets shall be protected and constructed as shown on the plans.

e. Filter Fabric. The filter fabric shall be installed in accordance with the manufacturer's recommendations, or in accordance with AASHTO M 288-99 APPENDIX, unless otherwise shown on the plans.

705-3.4 MORTAR. The mortar shall be of the desired consistency for caulking and filling the joints of the pipe and for making connections to other pipes or to structures. Mortar that is not used within 45 minutes after water has been added shall be discarded. Retempering of mortar shall not be permitted.

705-3.5 JOINTS IN CONCRETE PIPE. When open or partly open joints are required or specified, they shall be constructed as indicated on the plans. The pipe shall be laid with the ends fitted together as designed. If bell and spigot pipe is used, mortar shall be placed along the inside bottom quarter of the bell to center the following section of pipe.

The open or partly open joints shall be surrounded with granular material meeting requirements of porous backfill No. 2 or as indicated on the plans. This backfill shall be placed so its thickness will be not less than 3 inches (75 mm) nor more than 6 inches (150 mm), unless otherwise shown on the plans.

When the original material excavated from the trench is impervious, commercial concrete sand or granular material meeting requirements of porous backfill No. 1 shall surround porous backfill No. 2, as shown on the plans or as directed by the Engineer.

When the original material excavated from the trench is pervious and suitable, it may be used as backfill in lieu of porous backfill No. 1, when indicated on the plans or as directed by the Engineer.

705-3.6 BACKFILLING.

a. Earth. All trenches and excavations shall be backfilled within a reasonable time after the pipes are installed, unless other protection of the pipe is directed. The backfill material shall be selected material from excavation or borrow; material which is placed within a nominal pipe diameter distance at the sides of the pipe and 1 foot (30 cm) over the top shall be material that can be readily compacted. It shall not contain stones retained on a 3-inch (75 mm) sieve, frozen lumps, chunks of highly plastic clay, or any other material that is objectionable to the Engineer. The material shall be moistened or dried, if necessary to be compacted by the method in use. Backfill material shall be

approved by the Engineer. Special care shall be taken in placing the backfill. Great care shall be used to obtain thorough compaction under the haunches and along the sides to the top of the pipe.

The backfill shall be placed in loose layers not exceeding 6 inches (150 mm) in depth under and around the pipe, and not exceeding 8 inches (200 mm) over the pipe. Successive layers shall be added and thoroughly compacted by hand and pneumatic tampers, approved by the Engineer, until the trench is completely filled and brought to the proper elevation. Backfilling shall be done in a manner to avoid injurious top or side pressures on the pipe.

In embankments and for other areas outside of pavements, the backfill shall be compacted to the density required for embankments in unpaved areas under Item P-152. Under paved areas, the subgrade and any backfill shall be compacted to the density required for embankments for paved areas under Item P-152.

b. Granular Material. When granular backfill is required, its placement in the trench and about the pipe shall be as shown on the plans. Special care shall be taken in placing the backfill. The granular backfill shall not contain a damaging amount of foreign matter, nor shall earth from the sides of the trench or from the windrow be allowed to filter into the backfill. When required by the Engineer, a template shall be used to properly place and keep separate the two sizes of backfill. The backfill shall be placed in loose layers not exceeding 6 inches (150 mm) in depth and compacted by hand and pneumatic tampers to the requirements as given for earth backfill. Backfilling shall be done in a manner to avoid injurious top or side pressure on the pipe. The granular backfill shall be made to the elevation of the trench, as shown on the plans.

When perforated pipe is specified, granular backfill material shall be placed along the full length of the pipe. The position of the granular material shall be as shown on the plans. If the original material excavated from the trench is pervious and suitable, it shall be used in lieu of porous backfill No. 1.

When porous backfill is to be placed in paved or adjacent areas prior to the completion of grading or subgrade operations, the backfill material shall be placed immediately after laying the pipe. The depth of this granular backfill shall be not less than 12 inches (300 mm), measured from the top of the underdrain. During subsequent construction operations, this minimum backfill of 12 inches (300 mm) of depth shall not be disturbed until such time as the underdrains are to be completed. When the underdrains are to be completed, the unsuitable material shall be removed until the porous backfill is exposed. That part of the porous backfill that contains objectionable material shall be removed and replaced with suitable material. The cost of removing and replacing any such unsuitable material shall be borne by the Contractor.

Whenever a granular subbase blanket course is to be used under pavements which extends several feet beyond the edge of paving to the outside edge of the underdrain trench, the granular backfill material over the underdrains shall be placed in the trench up to an elevation of 2 inches (50 mm) above the bottom surface of the granular subbase blanket course. Immediately prior to the placing of the granular subbase blanket course, the Contractor shall blade this excess trench backfill from the top of the trench onto the adjacent subgrade where it can be incorporated into the granular subbase blanket course. Any unsuitable material that remains over the underdrain trench shall be removed and replaced. The subbase material shall be placed to provide clean contact between the subbase material and the underdrain granular backfill material for the full width of the underdrain trench.

c. Controlled Low Strength Material (CLSM). Controlled low strength material shall conform to the requirements of Item P-153.

d. Deflection Testing. The Engineer may at any time, not withstanding previous material acceptance, reject or require re-installation of pipe that exceeds 5 percent deflection when measured in accordance with ASTM D 2321, including Appendices.

705-3.7 CONNECTIONS. When the plans call for connections to existing or proposed pipe or structures, these connections shall be watertight and made so that a smooth uniform flow line will be obtained throughout the drainage system.

705-3.8 CLEANING AND RESTORATION OF SITE. After the backfill is completed, the Contractor shall dispose of all surplus material, dirt, and rubbish from the site. Surplus dirt may be deposited in embankments,

shoulders, or as ordered by the Engineer. Except for paved areas of the airport, the Contractor shall restore all disturbed areas to their original condition.

METHOD OF MEASUREMENT

705-4.1 The length of pipe to be paid for shall be the number of linear feet (meters) of pipe underdrains in place, completed, and approved; measured along the centerline of the pipe from end or inside face of structure to the end or inside face of structure, whichever is applicable. The several classes, types, and sizes shall be measured separately. All fittings shall be included in the footage as typical pipe sections in the pipeline being measured.

705-4.2 The quantity of porous backfill to be paid for shall be the number of cubic yards (cubic meters) of porous backfill No. 1 and No. 2, complete in place and accepted, and shall be determined from the dimensions given on the plans by typical trench sections indicating the placement of porous backfill or dimensions ordered by the Engineer.

705-4.3 The quantity of filter fabric to be paid for shall be the number of square yards (square meters) of filter fabric in place, completed, and approved; and shall be determined from the dimensions given on the plans by typical trench sections indicating the placement of filter fabric or dimensions ordered by the Engineer.

BASIS OF PAYMENT

705-5.1 Payment will be made at the contract unit price per linear foot (meter) for pipe underdrains of the type, class, and size designated; at the contract unit price **[per cubic yard (cubic meter)][per ton (metric ton)]** for porous backfill No.1; the contract unit price **[per cubic yard (cubic meter)][per ton (metric ton)]** for porous backfill No. 2, and at the contract unit price per square yard (square meter) for filter fabric. **[per linear foot (meter) COMPLETE (including porous backfill and filter fabric.]** These prices shall be full compensation for furnishing all materials and for all preparation, excavation, and installation of these materials, and for all labor, equipment, tools, and incidentals necessary to complete the item.

Payment will be made under:

Item D-705-5.1 **[ ]** inch pipe (mm pipe) **[ ]** per linear foot (meter)

Item D-705-5.2 Porous Backfill No. 1—**[per cubic yard (cubic meter)][per ton (metric ton)]**

Item D-705-5.3 Porous Backfill No. 2—**[per cubic yard (cubic meter)][per ton (metric ton)]**

Item D-705-5.4 Filter Fabric—per square yard (square meter)

[Item D-705-5.5 [ ] inch pipe (mm pipe) [ ] per linear foot (meter) COMPLETE (including porous backfill and filter fabric]

* * * *

ASTM C 136	Sieve Analysis of Fine and Coarse Aggregates
ASTM C 144	Aggregate for Masonry Mortar
ASTM C 150	Portland Cement
ASTM C 444	Perforated Concrete Pipe
ASTM C 654	Porous Concrete Pipe
ASTM D 2321	Underground Installation of Thermoplastic Pipe for Sewers and Other Gravity-Flow Applications
ASTM D 3034	Type PSM Poly(Vinyl Chloride) (PVC) Sewer Pipe and Fittings
ASTM F 477	Elastomeric Seals (Gaskets) for Joining Plastic Pipe
ASTM F 758	Smooth-Wall Poly(Vinyl Chloride) (PVC) Plastic Underdrain Systems for Highway, Airport, and Similar Drainage
ASTM F 794	Poly (Vinyl Chloride) Ribbed Drain Pipe & Fittings Based on Controlled Inside Diameter
ASTM F 949	Poly (Vinyl Chloride)(PVC) Corrugated Sewer Pipe with a Smooth Interior and Fittings
AASHTO M 190	Bituminous Coated Corrugated Metal Culvert Pipe and Pipe Arches
AASHTO M 196	Corrugated Aluminum Alloy Culverts and Underdrains
AASHTO M 252	Corrugated Polyethylene Drainage Tubing
AASHTO M 288-99	Geotextile Specification for Highway Applications
AASHTO M 294M	Corrugated Polyethylene Pipe, 300 to 1200 mm Diameter
AASHTO M 304	Poly (Vinyl Chloride) (PVC) Profile Wall Drain Pipe and Fittings Based on Controlled Inside Diameter
AASHTO	Standard Specifications for Highway Bridges

END OF ITEM D-705

Intentionally Left Blank

ITEM D-751 MANHOLES, CATCH BASINS, INLETS AND INSPECTION HOLES

DESCRIPTION

751-1.1 This item shall consist of construction of manholes, catch basins, inlets, and inspection holes, in accordance with these specifications, at the specified locations and conforming to the lines, grades, and dimensions shown on the plans or required by the Engineer.

MATERIALS

751-2.1 BRICK. The brick shall conform to the requirements of ASTM C 32, Grade SM.

751-2.2 MORTAR. Mortar shall consist of one part portland cement and two parts sand. The portland cement shall conform to the requirements of ASTM C 150, Type I. The sand shall conform to the requirements of ASTM C 144.

751-2.3 CONCRETE. Plain and reinforced concrete used in structures, connections of pipes with structures, and the support of structures or frames shall conform to the requirements of Item P-610.

751-2.4 PRECAST CONCRETE PIPE MANHOLE RINGS. Precast concrete pipe manhole rings shall conform to the requirements of ASTM C 478. Unless otherwise specified, the risers and offset cone sections shall have an inside diameter of not less than 36 inches (90 cm) nor more than 48 inches (120 cm).

751-2.5 CORRUGATED METAL. Corrugated metal shall conform to the requirements of AASHTO M 36.

751-2.6 FRAMES, COVERS, AND GRATES. The castings shall conform to one of the following requirements:

a. Gray iron castings shall meet the requirements of ASTM A 48, Class 30B and 35B.
b. Malleable iron castings shall meet the requirements of ASTM A 47.
c. Steel castings shall meet the requirements of ASTM A 27.
d. Structural steel for grates and frames shall conform to the requirements of ASTM A 283, Grade D.
e. Ductile iron castings shall conform to the requirements of ASTM A 536.
f. Austempered ductile iron castings shall conform to the requirements of ASTM A 897.

All castings or structural steel units shall conform to the dimensions shown on the plans and shall be designed to support the loadings, aircraft gear configuration and/or direct loading, specified.

Each frame and cover or grate unit shall be provided with fastening members to prevent it from being dislodged by traffic but which will allow easy removal for access to the structure.

All castings shall be thoroughly cleaned. After fabrication, structural steel units shall be galvanized to meet the requirements of ASTM A 123.

751-2.7 STEPS. The steps or ladder bars shall be gray or malleable cast iron or galvanized steel. The steps shall be the size, length, and shape shown on the plans and those steps that are not galvanized shall be given a coat of bituminous paint, when directed.

CONSTRUCTION METHODS

751-3.1 UNCLASSIFIED EXCAVATION.

a. The Contractor shall do all excavation for structures and structure footings to the lines and grades or elevations, shown on the plans, or as staked by the Engineer. The excavation shall be of sufficient size to permit the placing of the full width and length of the structure or structure footings shown. The elevations of the bottoms of

footings, as shown on the plans, shall be considered as approximately only; and the Engineer may order, in writing, changes in dimensions or elevations of footings necessary to secure a satisfactory foundation.

b. Boulders, logs, or any other objectionable material encountered in excavation shall be removed. All rock or other hard foundation material shall be cleaned of all loose material and cut to a firm surface either level, stepped, or serrated, as directed by the Engineer. All seams or crevices shall be cleaned out and grouted. All loose and disintegrated rock and thin strata shall be removed. When concrete is to rest on a surface other than rock, special care shall be taken not to disturb the bottom of the excavation, and excavation to final grade shall not be made until just before the concrete or reinforcing is to be placed.

c. The Contractor shall do all bracing, sheathing, or shoring necessary to implement and protect the excavation and the structure as required for safety or conformance to governing laws. The cost of bracing, sheathing, or shoring shall be included in the unit price bid for the structure.

d. Unless otherwise provided, bracing, sheathing, or shoring involved in the construction of this item shall be removed by the Contractor after the completion of the structure. Removal shall be effected in a manner that will not disturb or mar finished masonry. The cost of removal shall be included in the unit price bid for the structure.

e. After each excavation is completed, the Contractor shall notify the Engineer to that effect; and concrete or reinforcing steel shall be placed after the Engineer has approved the depth of the excavation and the character of the foundation material.

751-3.2 BRICK STRUCTURES.

a. Foundations. A prepared foundation shall be placed for all brick structures after the foundation excavation is completed and accepted. Unless otherwise specified, the base shall consist of reinforced concrete mixed, prepared, and placed in accordance with the requirements of Item P-610.

b. Laying Brick. All brick shall be clean and thoroughly wet before laying so that they will not absorb any appreciable amount of additional water at the time they are laid. All brick shall be laid in freshly made mortar. Mortar that is not used within 45 minutes after water has been added shall be discarded. Retempering of mortar shall not be permitted. An ample layer of mortar shall be spread on the beds and a shallow furrow shall be made in it that can be readily closed by the laying of the brick. All bed and head joints shall be filled solid with mortar. End joints of stretchers and side or cross joints of headers shall be fully buttered with mortar and a shoved joint made to squeeze out mortar at the top of the joint. Any bricks that may be loosened after the mortar has taken its set, shall be removed, cleaned, and relaid with fresh mortar. No broken or chipped brick shall be used in the face, and no spalls or bats shall be used except where necessary to shape around irregular openings or edges; in which case, full bricks shall be placed at ends or corners where possible, and the bats shall be used in the interior of the course. In making closures, no piece of brick shorter than the width of a whole brick shall be used; and wherever practicable, whole brick shall be used and laid as headers.

c. Joints. All joints shall be slushed with mortar at every course, but slushing alone will not be considered adequate for making an acceptable joint. Exterior faces shall be laid up in advance of backing. Exterior faces shall be back plastered or pargeted with a coat of mortar not less than 3/8-inch (9 mm) thick before the backing is laid up. Prior to pargeting, all joints on the back of face courses shall be cut flush. Unless otherwise noted, joints shall be not less than 1/4-inch (6 mm) nor more than 1/2-inch (12 mm) wide and whatever width is adopted shall be maintained uniform throughout the work.

d. Pointing. Face joints shall be neatly struck, using the weather joint. All joints shall be finished properly as the laying of the brick progresses. When nails or line pins are used the holes shall be immediately plugged with mortar and pointed when the nail or pin is removed.

e. Cleaning. Upon completion of the work all exterior surfaces shall be thoroughly cleaned by scrubbing and washing down with water and, if necessary to produce satisfactory results, cleaning shall be done with a 5% solution of muriatic acid which shall then be rinsed off with liberal quantities of clean fresh water.

f. Curing and Cold Weather Protection. In hot or dry weather, or when directed by the Engineer, the brick masonry shall be protected and kept moist for at least 48 hours after laying the brick. Brick masonry work or pointing shall not be done when there is frost in the brick or when the air temperature is below 50 F (10 C) unless the Contractor has on the project ready to use, suitable covering and artificial heating devices necessary to keep the atmosphere surrounding the masonry at a temperature of not less than 60 F (15 C) for the duration of the curing period.

751-3.3 CONCRETE STRUCTURES. Concrete structures shall be built on prepared foundations, conforming to the dimensions and form indicated on the plans. The construction shall conform to the requirements specified in Item P-610. Any reinforcement required shall be placed as indicated on the plans and shall be approved by the Engineer before the concrete is poured.

All invert channels shall be constructed and shaped accurately so as to be smooth, uniform, and cause minimum resistance to flowing water. The interior bottom shall be sloped downward toward the outlet.

751-3.4 PRECAST CONCRETE PIPE STRUCTURES. Precast concrete pipe structures shall be constructed on prepared or previously placed slab foundations and shall conform to the dimensions and locations shown on the plans. All precast concrete pipe sections necessary to build a completed structure shall be furnished. The different sections shall fit together readily, and all jointing and connections shall be cemented with mortar. The top of the upper precast concrete pipe member shall be suitably formed and dimensioned to receive the metal frame and cover or grate, or other cap, as required. Provision shall be made for any connections for lateral pipe, including drops and leads that may be installed in the structure. The flow lines shall be smooth, uniform, and cause minimum resistance to flow. The metal steps that are embedded or built into the side walls shall be aligned and placed at vertical intervals of 12 inches (300 mm). When a metal ladder replaces the steps, it shall be securely fastened into position.

751-3.5 CORRUGATED METAL STRUCTURES. Corrugated metal structures shall be constructed on prepared foundations, conforming to the dimensions and locations as shown on the plans. The structures shall be prefabricated. standard or special fittings shall be furnished to provide pipe connections or branches of correct dimensions. The connections or branches shall be of sufficient length to accommodate connecting bands. The fittings shall be welded in place to the metal structures. When indicated, the structures shall be placed on a reinforced concrete base. The top of the metal structure shall be designed so that either a concrete slab or metal collar may be attached to which can be fastened a standard metal frame and grate or cover. Steps or ladders shall be furnished as shown on the plans.

751-3.6 INLET AND OUTLET PIPES. Inlet and outlet pipes shall extend through the walls of the structures for a sufficient distance beyond the outside surface to allow for connections but shall be cut off flush with the wall on the inside surface, unless otherwise directed. For concrete or brick structures, the mortar shall be placed around these pipes so as to form a tight, neat connection.

751-3.7 PLACEMENT AND TREATMENT OF CASTINGS, FRAMES, AND FITTINGS. All castings, frames, and fittings shall be placed in the positions indicated on the plans or as directed by the Engineer, and shall be set true to line and to correct elevation. If frames or fittings are to be set in concrete or cement mortar, all anchors or bolts shall be in place and position before the concrete or mortar is placed. The unit shall not be disturbed until the mortar or concrete has set.

When frames or fittings are to be placed upon previously constructed masonry, the bearing surface or masonry shall be brought true to line and grade and shall present an even bearing surface in order that the entire face or back of the unit will come in contact with the masonry. The unit shall be set in mortar beds and anchored to the masonry as indicated on the plans or as directed and approved by the Engineer. All units shall set firm and secure.

After the frames or fittings have been set in final position and the concrete or mortar has been allowed to harden for 7 days, then the grates or covers shall be placed and fastened down.

751-3.8 INSTALLATION OF STEPS. The steps shall be installed as indicated on the plans or as directed by the Engineer. When the steps are to be set in concrete, they shall be placed and secured in position before the concrete is poured. When the steps are installed in brick masonry, they shall be placed as the masonry is being built. The

steps shall not be disturbed or used until the concrete or mortar has hardened for at least 7 days. After this period has elapsed, the steps shall be cleaned and painted, unless they have been galvanized.

When steps are required with precast concrete pipe structures, they shall be cast into the sides of the pipe at the time the pipe sections are manufactured or set in place after the structure is erected by drilling holes in the concrete and cementing the steps in place.

When steps are required with corrugated metal structures, they shall be welded into aligned position at a vertical spacing of 12 inches (300 mm).

In lieu of steps, prefabricated ladders may be installed. In the case of brick or concrete structures, the ladder shall be held in place by grouting the supports in drilled holes. In the case of metal structures, the ladder shall be secured by welding the top support and grouting the bottom support into drilled holes in the foundation or as directed.

751-3.9 BACKFILLING.

a. After a structure has been completed, the area around it shall be filled with approved material, in horizontal layers not to exceed 8 inches (200 mm) in loose depth, and compacted to the density required in Item P-152. Each layer shall be deposited all around the structure to approximately the same elevation. The top of the fill shall meet the elevation shown on the plans or as directed by the Engineer.

b. Backfilling shall not be placed against any structure until permission is given by the Engineer. In the case of concrete, such permission shall not be given until the concrete has been in place 7 days, or until tests made by the laboratory under supervision of the Engineer establish that the concrete has attained sufficient strength to provide a factor of safety against damage or strain in withstanding any pressure created by the backfill or the methods used in placing it.

c. Backfill shall not be measured for direct payment. Performance of this work shall be considered on obligation of the Contractor covered under the contract unit price for the structure involved.

* * * *

Payment will be made under:

Item D-751-5.1	Manholes—per each
Item D-751-5.2	Catch Basins—per each
Item D-751-5.3	Inlets—per each
Item D-751-5.4	Inspection Holes—per each

MATERIAL REQUIREMENT

ASTM A 27	Steel Castings, Carbon, for General Application
ASTM A 47	Ferritic Malleable Iron Castings
ASTM A 48	Gray Iron Castings
ASTM A 123	Zinc Coating (Hot-Dip) on Iron and Steel Hardware
ASTM A 283	Low and Intermediate Tensile Strength Carbon Steel Plates, Shapes, and Bars
ASTM A 536	Ductile Iron Castings
ASTM A 897	Austempered Ductile Iron Castings
ASTM C 32	Sewer and Manhole Brick (Made from Clay or Shale)
ASTM C 144	Aggregate for Masonry Mortar
ASTM C 150	Portland Cement
ASTM C 478	Precast Reinforced Concrete Manhole Sections
AASHTO M 36	Zinc Coated (Galvanized) Corrugated Iron or Steel Culverts and Underdrains

END OF ITEM D-751

Intentionally Left Blank

ITEM D-752 CONCRETE CULVERTS, HEADWALLS, AND MISCELLANEOUS DRAINAGE STRUCTURES

DESCRIPTION

752-1.1 This item shall consist of [plain][reinforced] concrete culverts, headwalls, and miscellaneous drainage structures constructed in accordance with these specifications, at the specified locations and conforming to the lines, grades, and dimensions shown on the plans or required by the Engineer.

MATERIALS

752-2.1 CONCRETE. [Plain][reinforced] concrete shall meet the requirements of Item P-610.

CONSTRUCTION METHODS

752-3.1 UNCLASSIFIED EXCAVATION.

a. Trenches and foundation pits for structures or structure footings shall be excavated to the lines and grades or elevations shown on the plans. The excavation shall be of sufficient size to permit the placing of the full width and length of the structure or structure footings shown. The elevations of the bottoms of footings, as shown on the plans, shall be considered as approximate only; and the Engineer may order, in writing, changes in dimensions or elevations of footings necessary to secure a satisfactory foundation.

b. Boulders, logs, or any other objectionable material encountered in excavation shall be removed. All rock or other hard foundation material shall be cleaned of all loose material and cut to a firm surface either level, stepped, or serrated, as directed by the Engineer. All seams or crevices shall be cleaned out and grouted. All loose and disintegrated rock and thin strata shall be removed. When concrete is to rest on a surface other than rock, special care shall be taken not to disturb the bottom of the excavation, and excavation to final grade shall not be made until just before the concrete or reinforcing steel is to be placed.

c. The Contractor shall do all bracing, sheathing, or shoring necessary to perform and protect the excavation and the structure as required for safety or conformance to governing laws. The cost of bracing, sheathing, or shoring shall be included in the unit price bid for excavation.

d. Unless otherwise provided, bracing, sheathing, or shoring involved therewith shall be removed by the Contractor after the completion of the structure. Removal shall be effected in a manner that will not disturb or mar finished concrete. The cost of removal shall be included in the unit price bid for excavation.

e. After each excavation is completed, the Contractor shall notify the Engineer to that effect, and concrete or reinforcing steel shall be placed after the Engineer has approved the depth of the excavation and the character of the foundation material.

752-3.2 BACKFILLING.

a. After a structure has been completed, backfilling with approved material shall be accomplished by applying the fill in horizontal layers not to exceed 8 inches (200 mm) in loose depth, and compacted. The field density of the compacted material shall be at least 90 percent of the maximum density for cohesive soils and 95 percent of the maximum density for noncohesive soils. The maximum density shall be determined in accordance with ASTM D 698. The field density shall be determined in accordance with ASTM D 1556.

b. No backfilling shall be placed against any structure until permission is given by the Engineer. In the case of concrete, such permission shall not be given until the concrete has been in place 7 days, or until tests made by the laboratory under the supervision of the Engineer establish that the concrete has attained sufficient strength to provide a factor of safety against damage or strain in withstanding any pressure created by the backfill or the methods used in placing it.

c. Fill placed around concrete culverts shall be deposited on both sides at the same time and to approximately the same elevation. Care shall be taken to prevent any wedging action against the structure, and all slopes bounding or within the areas to be backfilled shall be stepped or serrated to prevent wedge action.

d. Backfill will not be measured for direct payment. Performance of this work under the contract is not payable directly but shall be considered as a subsidiary obligation of the Contractor, covered under the contract unit price for ``unclassified excavation for structures."

752-3.3 WEEP HOLES. Weep holes shall be constructed as shown on the plans.

752-3.4 CLEANING AND RESTORATION OF SITE. After the backfill is completed, the Contractor shall dispose of all surplus material, dirt, and rubbish from the site. Surplus dirt may be deposited in embankment, shoulders, or as ordered by the Engineer. The Contractor shall restore all disturbed areas to their original condition.

After all work is completed, the Contractor shall remove all tools and equipment, leaving the entire site free, clear, and in good condition.

METHOD OF MEASUREMENT

752-4.1 The quantity of unclassified excavation for structures to be paid for shall be the number of cubic yards (cubic meters), measured in original position, of material excavated in accordance with the plans, or as directed by the Engineer; but in no case shall any yardage be included in the measurement for payment which is outside of a volume bounded by vertical planes 18 inches (45 cm) outside of and parallel to the neat lines of the footings.

752-4.2 Concrete shall be measured by the number of cubic yards (cubic meters) of concrete, complete in place and accepted. In computing the yardage of concrete for payment, the dimensions used shall be those shown on the plans or ordered by the Engineer. No measurements or other allowances shall be made for forms, false work, cofferdams, pumping, bracing, expansion joints, or finishing of the concrete. No deductions in yardage shall be made for the volumes of reinforcing steel or embedded items.

752-4.3 The quantity of reinforcing steel to be paid for shall be the calculated theoretical number of pounds (kilograms)placed as shown on the plans, complete in place and accepted. The unit weight used for deformed bars shall be the weight of plain square or round bars, as the case may be, of equal nominal size.

BASIS OF PAYMENT

752-5.1 Payment will be made at the contract unit price per cubic yard (cubic meter) for unclassified excavation for structures; at the contract unit price per cubic yard (cubic meter) for concrete for the structures; and at the contract unit price per pound (kilogram) for reinforcing steel. These prices shall be full compensation for furnishing all materials and for all preparation, excavation, and placing the materials, and for all labor, equipment, tools, and incidentals necessary to complete the structure.

Payment will be made under:

Item D-752-5.1 Unclassified Excavation for Structures—per cubic yard (cubic meter)

Item D-752-5.2 Structural Concrete—per cubic yard (cubic meter)

Item D-752-5.3 Reinforcing Steel—per pound (kilogram)

TESTING REQUIREMENTS

ASTM D 698 Moisture-Density Relations of Soils and Soil-Aggregate Mixtures Using 5.5 lb (2.49 kg) Rammer and 12-in (305 mm) Drop

ASTM D 1556 Density of Soil in Place by the Sand-Cone Method

END OF ITEM D-752

Intentionally Left Blank

ITEM D-754 CONCRETE GUTTERS, DITCHES, AND FLUMES

DESCRIPTION

754-1.1 This item shall consist of portland cement concrete gutters, ditches, and flumes constructed in accordance with these specifications at the specified locations in accordance with the dimensions, lines, and grades as shown on the plans.

MATERIALS

754-2.1 Concrete, plain and reinforced concrete shall meet the requirements of Item P-610.

754-2.2 JOINTS. Joint filler materials and premolded joint material shall conform to Item P-610.

CONSTRUCTION METHODS

754-3.1 PREPARING SUBGRADE. Excavation shall be made to the required width and depth, and the subgrade upon which the item is to be built shall be compacted to a firm uniform grade. All soft and unsuitable material shall be removed and replaced with suitable approved material. When required, a layer of approved granular material, compacted to the thickness indicated on the plans, shall be placed to form a subbase. The underlying course shall be checked and accepted by the Engineer before placing and spreading operations are started.

754-3.2 PLACING. The forms for and the mixing, placing, finishing, and curing of concrete shall conform to the requirements of Item P-610 and shall be in accordance with the following requirements.

The concrete shall be tamped and spaded until it is consolidated and mortar entirely covers and forms the top surface. The surface of the concrete shall be floated smooth and the edges rounded to the radii shown on the plans. Before the concrete is given the final finishing, the surface shall be tested with a 10-foot (3 m) straightedge, and any irregularities of more than 1/4 inch (6 mm) in 10 feet (3 m) shall be eliminated.

The concrete shall be placed with dummy-grooved joints not to exceed 25 feet (7.5 m) apart, except where shorter lengths are necessary for closures, but no section shall be less than 4 feet (120 cm) long.

Expansion joints of the type called for in the plans shall be constructed to replace a dummy groove at spacings of approximately 100 feet (30 m). When the gutter is placed next to concrete pavement, expansion joints in the gutter shall be located opposite expansion joints in the pavement. When a gutter abuts a pavement or other structure, an expansion joint shall be placed between the gutter and the other structure.

Forms shall not be removed within 24 hours after the concrete has been placed. Minor defects shall be repaired with mortar containing 1 part cement and 2 parts fine aggregate.

The operations of depositing, compacting, and finishing the item shall be conducted so as to build a satisfactory structure. If any section of concrete is found to be porous, other than minor defects that may be plastered, or is otherwise defective, it shall be removed and replaced by the Contractor without additional compensation.

754-3 BACKFILLING. After the concrete has set sufficiently, the spaces adjacent to the structure shall be refilled to the required elevation with material specified on the plans and compacted by mechanical equipment to at least 90% of the maximum density as determined by ASTM D 698. The in-place density shall be determined in accordance with ASTM D 1556.

754-3.4 CLEANING AND RESTORATION OF SITE. After the backfill is completed, the Contractor shall dispose of all surplus material, dirt, and rubbish from the site. Surplus dirt may be deposited in embankments, shoulders, or as ordered by the Engineer. The Contractor shall restore all disturbed areas to their original condition.

After all work is completed, the Contractor shall remove all tools and equipment, leaving the entire site free, clear and in good condition.

Performance of the work described in this section is not payable directly but shall be considered as a subsidiary obligation of the Contractor, covered under the contract unit price for the structure.

METHOD OF MEASUREMENT

754-4.1 Concrete shall be measured by the cubic yard (cubic meter) in accordance with the dimensions shown on the plans or ordered by the Engineer. No deductions shall be made for the volume occupied by reinforcing steel, anchors, conduits, weep holes, or piling.

754-4.2 Reinforcing steel shall be measured by the pound (kg), based on the theoretical number of pounds (kg) complete in place as shown on the plans or placed as ordered by the Engineer.

BASIS OF PAYMENT

754-5.1 The accepted quantities of structural concrete will be paid for at the contract unit price per cubic yard (cubic meter) complete in place.

754-5.2 The accepted quantities of reinforcing steel will be paid for at the contract price per pound (kg) complete in place. No allowance shall be made for clips, wire, or other material used for fastening reinforcement in place.

Payment will be made under:

Item D-754-5.1 Structural Concrete—per cubic yard (cubic meter)

Item D-754-5.2 Reinforcing Steel—per pound (kg)

TESTING REQUIREMENTS

ASTM D 698 Moisture-Density Relations of Soils and Soil-Aggregate Mixtures Using 5.5 lb (2.49 kg) Rammer and 12-inch (300 mm) Drop

ASTM D 1556 Density of Soil in Place by the Sand-Cone Method

END OF ITEM D-754

PART X – TURFING
ITEM T-901 SEEDING

DESCRIPTION

901-1.1 This item shall consist of soil preparation, seeding **[ ]** the areas shown on the plans or as directed by the Engineer in accordance with these specifications.

* * * *

* * * *

shall be worked into a satisfactory seedbed by discing, or by use of cultipackers, rollers, drags, harrows, or other appropriate means.

901-3.2 DRY APPLICATION METHOD.

a. Liming. Lime shall be applied separately and prior to the application of any fertilizer or seed and only on seedbeds that have previously been prepared as described above. The lime shall then be worked into the top 3 inches (75 mm) of soil after which the seedbed shall again be properly graded and dressed to a smooth finish.

b. Fertilizing. Following advance preparations and cleanup fertilizer shall be uniformly spread at the rate that will provide not less than the minimum quantity stated in paragraph 901-2.3.

* * * *

In order to reach areas inaccessible to the regular equipment, an extension hose at least 50 feet (15 m) in length shall be provided to which the nozzles may be connected.

c. Mixtures. Lime, if required, shall be applied separately, in the quantity specified, prior to the fertilizing and seeding operations. Not more than 220 pounds (100 kg) of lime shall be added to and mixed with each 100 gallons (380 liters) of water. Seed and fertilizer shall be mixed together in the relative proportions specified, but not more than a total of 220 pounds (100 kg) of these combined solids shall be added to and mixed with each 100 gallons (380 liters) of water.

All water used shall be obtained from fresh water sources and shall be free from injurious chemicals and other toxic substances harmful to plant life. Brackish water shall not be used at any time. The Contractor shall identify to the Engineer all sources of water at least 2 weeks prior to use. The Engineer may take samples of the water at the source or from the tank at any time and have a laboratory test the samples for chemical and saline content. The Contractor shall not use any water from any source that is disapproved by the Engineer following such tests.

All mixtures shall be constantly agitated from the time they are mixed until they are finally applied to the seedbed. All such mixtures shall be used within 2 hours from the time they were mixed or they shall be wasted and disposed of at locations acceptable to the Engineer.

d. Spraying. Lime, if required, shall be sprayed only upon previously prepared seedbeds. After the applied lime mixture has dried, the lime shall be worked into the top 3 inches (8 cm), after which the seedbed shall again be properly graded and dressed to a smooth finish.

Mixtures of seed and fertilizer shall only be sprayed upon previously prepared seedbeds on which the lime, if required, shall already have been worked in. The mixtures shall be applied by means of a high-pressure spray that shall always be directed upward into the air so that the mixtures will fall to the ground like rain in a uniform spray. Nozzles or sprays shall never be directed toward the ground in such a manner as might produce erosion or runoff.

Particular care shall be exercised to insure that the application is made uniformly and at the prescribed rate and to guard against misses and overlapped areas. Proper predetermined quantities of the mixture in accordance with specifications shall be used to cover specified sections of known area. Checks on the rate and uniformity of application may be made by observing the degree of wetting of the ground or by distributing test sheets of paper or pans over the area at intervals and observing the quantity of material deposited thereon.

On surfaces that are to be mulched as indicated by the plans or designated by the Engineer, seed and fertilizer applied by the spray method need not be raked into the soil or rolled. However, on surfaces on which mulch is not to be used, the raking and rolling operations will be required after the soil has dried.

901-3.4 MAINTENANCE OF SEEDED AREAS. The Contractor shall protect seeded areas against traffic or other use by warning signs or barricades, as approved by the Engineer. Surfaces gullied or otherwise damaged following seeding shall be repaired by regrading and reseeding as directed. The Contractor shall mow, water as directed, and otherwise maintain seeded areas in a satisfactory condition until final inspection and acceptance of the work.

When either the dry or wet application method outlined above is used for work done out of season, it will be required that the Contractor establish a good stand of grass of uniform color and density to the satisfaction of the Engineer. A grass stand shall be considered adequate when bare spots are one square foot or less, randomly dispersed, and do not exceed 3% of the area seeded. If at the time when the contract has been otherwise completed it is not possible to make an adequate determination of the color, density, and uniformity of such stand of grass, payment for the unaccepted portions of the areas seeded out of season will be withheld until such time as these requirements have been met.

METHOD OF MEASUREMENT

901-4.1 The quantity of seeding to be paid for shall be the number of units **[1,000 square feet (square meters)][acres (square meters)]** measured on the ground surface, completed and accepted.

BASIS OF PAYMENT

901-5.1 Payment shall be made at the contract unit price per **[1,000 square feet (square meters)][acre (square meters)]** or fraction thereof, which price and payment shall be full compensation for furnishing and placing all material and for all labor, equipment, tools, and incidentals necessary to complete the work prescribed in this item.

Payment will be made under:

Item 901-5.1	Seeding—per **[1,000 square feet (square meters)][acre (square meters)]**

MATERIAL REQUIREMENTS

ASTM C 602	Agricultural Liming Materials
ASTM D 977	Emulsified Asphalt
FED SPEC A-A-1909	Fertilizer
FED SPEC A-A-2671	Seeds, Agriculture

END OF ITEM T-901

Intentionally Left Blank

ITEM T-903 SPRIGGING

DESCRIPTION

903-1.1 This item shall consist of planting sprigs of living grass plants at the locations shown on the plans or as directed by the Engineer in accordance with these specifications.

MATERIALS

903-2.1 SPRIGS. Sprigs shall be healthy living stems (stolons or rhizomes), of the grass species stated in the special provisions, harvested without adhering soil and obtained from sources where the sod is heavy and thickly matted. The presence of weeds or other material that might be detrimental to the proposed planting will be cause for rejection of sprigs.

903-2.2 LIME. Lime shall conform to the requirements of 901-2.2.

903-2.3 FERTILIZER. Fertilizer shall conform to the requirements of 901-2.3.

* * * *

903-3.3 APPLYING FERTILIZER AND GROUND LIMESTONE. Following advance preparation and cleanup, fertilizer shall be uniformly spread at a rate that will provide not less than the minimum quantity of each fertilizer ingredient as stated in the special provisions. If use of ground limestone is required, it shall then be spread at a rate that will provide not less than the minimum quantity stated in the special provisions. These materials shall be incorporated into the soil to a depth of not less than 2 inches (50 mm) by discing, raking, or other methods acceptable to the Engineer. Any stones larger than 2 inches (50 mm) in any diameter, large clods, roots, and other litter brought to the surface by this operation shall be removed.

In steep slopes where fertilizer and ground limestone cannot be incorporated effectively by mechanical equipment, they may be applied with power sprayers, blower equipment, or other approved method, and need not be incorporated into the soil.

903-3.4 HARVESTING SPRIGS. The sprigs obtained from sources off the site shall be from suitable areas as close as practical to the planting site. Regardless of the source, sprigging material that contains grass and weeds taller than 6 inches (150 mm) shall be mowed to a height of 3 inches (75 mm), and the clippings raked and removed before harvesting begins. Harvesting may be performed by any method acceptable to the Engineer, including crisscross cultivation, shallow plowing, or other acceptable methods to thoroughly loosen the sprigs from the soil and to bring them to the surface. After loosening the sprigs from the soil, they shall be gathered in small piles or windrows, watered, and kept moist until planted.

Not more than 24 hours shall elapse between harvesting and planting sprigs, except that, when weather or other uncontrollable conditions interrupt the work, a time extension may be granted, provided the sprigs are still moist and viable. Sprigs that have heated in stockpiles, have become frozen, permitted to dry out, or otherwise seriously damaged during harvesting or delivery shall be rejected and shall be disposed of as directed by the Engineer.

903-3.5 PLANTING SPRIGS. Sprigging shall be done only within the periods stipulated in the special provisions. Sprigging shall not be done during windy weather, or when the ground is dry, excessively wet, frozen, or otherwise untillable. If the soil is not moist when the sprigs are being set, water shall be applied until the soil is moist and in a workable condition. One or more of the following methods shall be used, whichever is shown on the plans or stated in the special provisions:

a. Broadcast Sprigging. Sprigs shall be broadcast by hand or by suitable equipment in a uniform layer over the prepared surface with spacing between sprigs not to exceed 6 inches (150 mm). The sprigs shall then be forced into the soil to a depth of 2 to 4 inches (50 to 100 mm) with a straight spade or similar tool, or with a disc harrow or other equipment set to cover the sprigs to the required depth.

b. Row Sprigging. Furrows shall be opened along the approximate contour of slopes at the spacing and depth stated in the special provisions. Sprigs shall be placed without delay in a continuous row in the open furrow with successive sprigs touching, and they shall be covered immediately.

c. Spot Sprigging. Spot sprigging shall be performed as specified under row sprigging, except that groups of 4 sprigs or more shall be spaced 18 inches (45 cm) apart in the rows.

903-3.6 MULCHING AND COMPACTING. After planting of sprigs has been completed and prior to compacting, the surface shall be cleared of stones larger than 2 inches (50 mm) in any diameter, large clods, roots, and other litter brought to the surface during sprigging.

If mulching of sprigged areas is shown on the plans or stated in the special provisions, the sprigged areas shall be covered with mulch in accordance with the requirements of Item T-908 within 24 hours from the time sprigging has been completed, weather and soil conditions permitting.

If mulching is not shown on the plans nor stated in the special provisions, the sprigged area shall be compacted within 24 hours from the time sprigging has been completed, weather and soil conditions permitting, by cultipackers, rollers, or other satisfactory equipment operated at right angles to the slope. Compaction shall not be done when the soil is in such condition that it is picked up by the equipment.

903-3.7 ESTABLISHING TURF. The Contractor shall be responsible for the proper care of the sprigged areas during the period when the plants are becoming established and he shall protect the sprigged areas against traffic by warning signs or barricades approved by the Engineer. Surfaces gullied or otherwise damaged following sprigging shall be repaired by regrading and resprigging as directed. The Contractor shall mow, water as directed, and otherwise maintain sprigged areas in a satisfactory condition until final inspection and acceptance of the work.

METHOD OF MEASUREMENT

903-4.1 Sprigging shall be measured by the number of units of 1,000 square feet (100 square meters), measured on the ground surface, completed and accepted.

BASIS OF PAYMENT

903-5.1 Payment will be made at the contract unit price per 1,000 square feet (100 square meters) or fraction thereof. This price shall be full compensation for furnishing and placing all material including any required mulching of sprigged areas, and for all labor, equipment, tools, and incidentals necessary to complete the work prescribed in this item.

Payment will be made under:

Item 903-5.1 Sprigging—per 1,000 square feet (100 square meters)

END OF ITEM T-903

Intentionally Left Blank

ITEM T-904 SODDING

DESCRIPTION

904-1.1 This item shall consist of furnishing, hauling, and placing approved live sod on prepared areas in accordance with this specification at the locations shown on the plans or as directed by the Engineer.

MATERIALS

904-2.1 SOD. Sod furnished by the Contractor shall have a good cover of living or growing grass. This shall be interpreted to include grass that is seasonally dormant during the cold or dry seasons and capable of renewing growth after the dormant period. All sod shall be obtained from areas where the soil is reasonably fertile and contains a high percentage of loamy topsoil. Sod shall be cut or stripped from living, thickly matted turf relatively free of weeds or other undesirable foreign plants, large stones, roots, or other materials that might be detrimental to the development of the sod or to future maintenance. At least 70% of the plants in the cut sod shall be composed of the species stated in the special provisions, and any vegetation more than 6 inches (150 mm) in height shall be mowed to a height of 3 inches (75 mm) or less before sod is lifted. Sod, including the soil containing the roots and the plant growth showing above, shall be cut uniformly to a thickness not less than that stated in the special provisions.

904-2.2 LIME. Lime shall conform to the requirements of 901-2.2.

904-2.3 FERTILIZER. Fertilizer shall conform to the requirements of 901-2.3.

* * * *

grading of areas and before beginning the application of fertilizer and ground limestone, the Contractor shall repair such damage. This may include filling gullies, smoothing irregularities, and repairing other incidental damage.

904-3.3 APPLYING FERTILIZER AND GROUND LIMESTONE. Following ground surface preparation, fertilizer shall be uniformly spread at a rate which will provide not less than the minimum quantity of each fertilizer ingredient, as stated in the special provisions. If use of ground limestone is required, it shall then be spread at a rate that will provide not less than the minimum quantity stated in the special provisions. These materials shall be incorporated into the soil to a depth of not less than 2 inches (50 mm) by discing, raking, or other methods acceptable to the Engineer. Any stones larger than 2 inches (50 mm) in any diameter, large clods, roots, and other litter brought to the surface by this operation shall be removed.

904-3.4 OBTAINING AND DELIVERING SOD. After inspection and approval of the source of sod by the Engineer, the sod shall be cut with approved sod cutters to such a thickness that after it has been transported and placed on the prepared bed, but before it has been compacted, it shall have a uniform thickness of not less than 2 inches (50 mm). Sod sections or strips shall be cut in uniform widths, not less than 10 inches (250 mm), and in lengths of not less than 18 inches (45 cm), but of such length as may be readily lifted without breaking, tearing, or loss of soil. Where strips are required, the sod must be rolled without damage with the grass folded inside. The Contractor may be required to mow high grass before cutting sod.

The sod shall be transplanted within 24 hours from the time it is stripped, unless circumstances beyond the Contractor's control make storing necessary. In such cases, sod shall be stacked, kept moist, and protected from exposure to the air and sun and shall be kept from freezing. Sod shall be cut and moved only when the soil moisture conditions are such that favorable results can be expected. Where the soil is too dry, permission to cut sod may be granted only after it has been watered sufficiently to moisten the soil to the depth the sod is to be cut.

904-3.5 LAYING SOD. Sodding shall be performed only during the seasons when satisfactory results can be expected. Frozen sod shall not be used and sod shall not be placed upon frozen soil. Sod may be transplanted during periods of drought with the approval of the Engineer, provided the sod bed is watered to moisten the soil to a depth of at least 4 inches (100 mm) immediately prior to laying the sod.

The sod shall be moist and shall be placed on a moist earth bed. Pitch forks shall not be used to handle sod, and dumping from vehicles shall not be permitted. The sod shall be carefully placed by hand, edge to edge and with staggered joints, in rows at right angles to the slopes, commencing at the base of the area to be sodded and working upward. The sod shall immediately be pressed firmly into contact with the sod bed by tamping or rolling with approved equipment to provide a true and even surface, and insure knitting without displacement of the sod or deformation of the surfaces of sodded areas. Where the sod may be displaced during sodding operations, the workmen when replacing it shall work from ladders or treaded planks to prevent further displacement. Screened soil of good quality shall be used to fill all cracks between sods. The quantity of the fill soil shall not cause smothering of the grass. Where the grades are such that the flow of water will be from paved surfaces across sodded areas, the surface of the soil in the sod after compaction shall be set approximately 1 inch (25 mm) below the pavement edge. Where the flow will be over the sodded areas and onto the paved surfaces around manholes and inlets, the surface of the soil in the sod after compaction shall be placed flush with pavement edges.

On slopes steeper than 1 vertical to 2-1/2 horizontal and in v-shaped or flat-bottom ditches or gutters, the sod shall be pegged with wooden pegs not less than 12 inches (300 mm) in length and have a cross-sectional area of not less than 3/4 square inch (18 square millimeter). The pegs shall be driven flush with the surface of the sod.

904-3.6 WATERING. Adequate water and watering equipment must be on hand before sodding begins, and sod shall be kept moist until it has become established and its continued growth assured. In all cases, watering shall be done in a manner that will avoid erosion from the application of excessive quantities and will avoid damage to the finished surface.

904-3.7 ESTABLISHING TURF.

a. General. The Contractor shall provide general care for the sodded areas as soon as the sod has been laid and shall continue until final inspection and acceptance of the work.

b. Protection. All sodded areas shall be protected against traffic or other use by warning signs or barricades approved by the Engineer.

c. Mowing. The Contractor shall mow the sodded areas with approved mowing equipment, depending upon climatic and growth conditions and the needs for mowing specific areas. In the event that weeds or other undesirable vegetation are permitted to grow to such an extent that, either cut or uncut, they threaten to smother the sodded species, they shall be mowed and the clippings raked and removed from the area.

904-3.8 REPAIRING. When the surface has become bullied or otherwise damaged during the period covered by this contract, the affected areas shall be repaired to re-establish the grade and the condition of the soil, as directed by the Engineer, and shall then be sodded as specified in 904-3.5.

METHOD OF MEASUREMENT

904-4.1 This item shall be measured on the basis of the area in square yards (square meters) of the surface covered with sod and accepted.

BASIS OF PAYMENT

904-5.1 This item will be paid for on the basis of the contract unit price per square yard (square meter) for sodding, which price shall be full compensation for all labor, equipment, material, staking, and incidentals necessary to satisfactorily complete the items as specified.

Payment will be made under:

Item T-904-5.1 Sodding—per square yard (square meter)

END OF ITEM T-904

Intentionally Left Blank

ITEM T-905 TOPSOILING

DESCRIPTION

905-1.1 This item shall consist of preparing the ground surface for topsoil application, removing topsoil from designated stockpiles or areas to be stripped on the site or from approved sources off the site, and placing and spreading the topsoil on prepared areas in accordance with this specification at the locations shown on the plans or as directed by the Engineer.

MATERIALS

905-2.1 TOPSOIL. Topsoil shall be the surface layer of soil with no admixture of refuse or any material toxic to plant growth, and it shall be reasonably free from subsoil and stumps, roots, brush, stones (2 inches or more in diameter), and clay lumps or similar objects. Brush and other vegetation that will not be incorporated with the soil during handling operations shall be cut and removed. Ordinary sods and herbaceous growth such as grass and weeds are not to be removed but shall be thoroughly broken up and intermixed with the soil during handling operations. The topsoil or soil mixture, unless otherwise specified or approved, shall have a pH range of approximately 5.5 pH to 7.6 pH, when tested in accordance with the methods of testing of the association of official agricultural chemists in effect on the date of invitation of bids. The organic content shall be not less than 3% nor more than 20% as determined by the wet-combustion method (chromic acid reduction). There shall be not less than 20% nor more than 80% of the material passing the 200 mesh (0.075 mm) sieve as determined by the wash test in accordance with ASTM C 117.

Natural topsoil may be amended by the Contractor with approved materials and methods to meet the above specifications.

905-2.2 INSPECTION AND TESTS. Within 10 days following acceptance of the bid, the Engineer shall be notified of the source of topsoil to be furnished by the Contractor. The topsoil shall be inspected to determine if the selected soil meets the requirements specified and to determine the depth to which stripping will be permitted. At this time, the Contractor may be required to take representative soil samples from several locations within the area under consideration and to the proposed stripping depths, for testing purposes as specified in 905-2.1.

CONSTRUCTION METHODS

905-3.1 GENERAL. Areas to be topsoiled shall be shown on the plans. If topsoil is available on the site, the location of the stockpiles or areas to be stripped of topsoil and the stripping depths shall be shown on the plans.

Suitable equipment necessary for proper preparation and treatment of the ground surface, stripping of topsoil, and for the handling and placing of all required materials shall be on hand, in good condition, and approved by the Engineer before the various operations are started.

905-3.2 PREPARING THE GROUND SURFACE. Immediately prior to dumping and spreading the topsoil on any area, the surface shall be loosened by discs or spike-tooth harrows, or by other means approved by the Engineer, to a minimum depth of 2 inches (50 mm) to facilitate bonding of the topsoil to the covered subgrade soil. The surface of the area to be topsoiled shall be cleared of all stones larger than 2 inches (50 mm) in any diameter and all litter or other material which may be detrimental to proper bonding, the rise of capillary moisture, or the proper growth of the desired planting. Limited areas, as shown on the plans, which are too compact to respond to these operations shall receive special scarification.

Grades on the area to be topsoiled, which have been established by others as shown on the plans, shall be maintained in a true and even condition. Where grades have not been established, the areas shall be smooth-graded and the

surface left at the prescribed grades in an even and properly compacted condition to prevent, insofar as practical, the formation of low places or pockets where water will stand.

905-3.3 OBTAINING TOPSOIL. Prior to the stripping of topsoil from designated areas, any vegetation, briars, stumps and large roots, rubbish or stones found on such areas, which may interfere with subsequent operations, shall be removed using methods approved by the Engineer. Heavy sod or other cover, which cannot be incorporated into the topsoil by discing or other means shall be removed.

When suitable topsoil is available on the site, the Contractor shall remove this material from the designated areas and to the depth as directed by the Engineer. The topsoil shall be spread on areas already tilled and smooth-graded, or stockpiled in areas approved by the Engineer. Any topsoil stockpiled by the Contractor shall be rehandled and placed without additional compensation. Any topsoil that has been stockpiled on the site by others, and is required for topsoiling purposes, shall be removed and placed by the Contractor. The sites of all stockpiles and areas adjacent thereto which have been disturbed by the Contractor shall be graded if required and put into a condition acceptable for seeding.

When suitable topsoil is secured off the airport site, the Contractor shall locate and obtain the supply, subject to the approval of the Engineer. The Contractor shall notify the Engineer sufficiently in advance of operations in order that necessary measurements and tests can be made. The Contractor shall remove the topsoil from approved areas and to the depth as directed. The topsoil shall be hauled to the site of the work and placed for spreading, or spread as required. Any topsoil hauled to the site of the work and stockpiled shall be rehandled and placed without additional compensation.

905-3.4 PLACING TOPSOIL. The topsoil shall be evenly spread on the prepared areas to a uniform depth of 2 inches (50 mm) after compaction, unless otherwise shown on the plans or stated in the special provisions. Spreading shall not be done when the ground or topsoil is frozen, excessively wet, or otherwise in a condition detrimental to the work. Spreading shall be carried on so that turfing operations can proceed with a minimum of soil preparation or tilling.

After spreading, any large, stiff clods and hard lumps shall be broken with a pulverizer or by other effective means, and all stones or rocks (2 inches (50 mm) or more in diameter), roots, litter, or any foreign matter shall be raked up and disposed of by the Contractor. after spreading is completed, the topsoil shall be satisfactorily compacted by rolling with a cultipacker or by other means approved by the Engineer. The compacted topsoil surface shall conform to the required lines, grades, and cross sections. Any topsoil or other dirt falling upon pavements as a result of hauling or handling of topsoil shall be promptly removed.

METHOD OF MEASUREMENT

905-4.1 Topsoil obtained on the site shall be measured by the number of cubic yards (cubic meters) of topsoil measured in its original position and stripped or excavated. Topsoil stockpiled by others and removed for topsoiling by the Contractor shall be measured by the number of cubic yards (cubic meters) of topsoil measured in the stockpile. Topsoil shall be measured by volume in cubic yards (cubic meters) computed by the method of end areas.

905-4.2 Topsoil obtained off the site shall be measured by the number of cubic yards (cubic meters) of topsoil measured in its original position and stripped or excavated. Topsoil shall be measured by volume in cubic yards (meters) computed by the method of end areas.

BASIS OF PAYMENT

905-5.1 Payment will be made at the contract unit price per cubic yard (cubic meter) for topsoiling (obtained on the site). This price shall be full compensation for furnishing all materials and for all preparation, placing, and spreading of the materials, and for all labor, equipment, tools, and incidentals necessary to complete the item.

905-5.2 Payment will be made at the contract unit price per cubic yard (cubic meter) for topsoiling (obtained off the site). This price shall be full compensation for furnishing all materials and for all preparation, placing, and spreading of the materials, and for all labor, equipment, tools, and incidentals necessary to complete the item.

Payment will be made under:

Item T-905-5.1 Topsoiling (Obtained on Site or Removed from Stockpile—per cubic yard (cubic meter)

Item T-905-5.2 Topsoiling (Furnished from Off the Site)—per cubic yard (cubic meter)

TESTING MATERIALS

ASTM C 117 Materials Finer than 75-μm (No. 200) Sieve in Mineral Aggregates by Washing

END OF ITEM T-905

Intentionally Left Blank

ITEM T-907 TILLING

DESCRIPTION

907-1.1 This item shall consist of preparing the surface of areas for dust control or erosion control in accordance with this specification at the locations shown on the plans or as directed by the Engineer.

CONSTRUCTION METHODS

907-3.1 GENERAL. Areas to be tilled and areas requiring special attention and tilling shall be shown on the plans.

The tilling work shall be performed only during periods when beneficial and satisfactory results can be reasonably expected. The work shall be stopped when it is unlikely that the desired results will be obtained, due to excessive drought, moisture conditions, or other factors, and resumed only when the conditions again are favorable.

Suitable equipment necessary for proper tilling and for handling all required materials shall be on hand, in good operating condition, and approved by the Engineer before the various operations are started.

907-3.2 TILLING.

a. General. Prior to the commencement of tilling operations, all heavy growths of vegetation on areas shown on the plans to be tilled shall be mowed, raked and burned, used for mulch if suitable, or hauled off the site, as directed by the Engineer.

During tilling operations, the ground surface shall be kept cleared of all cable, wire, or any other waste materials that might hinder final grading, planting, or subsequent maintenance operations. Any irregularities in the surface resulting from tilling or other operations of the Contractor shall be corrected insofar as practical to prevent the formation of low places and pockets where water will stand.

The proper graded areas shall be tilled by the Contractor with suitable plows, discs, scarifying machines, or other power-drawn implements approved by the Engineer.

b. For Dust and Erosion Control. The areas to be tilled for dust or erosion control shall be loosened to a depth of at least 4 inches (10 cm) by a tiller tool so that clods will be left on the surface of the ground. In areas where such penetration cannot be accomplished by a tiller tool in one operation, a heavy scarifier shall be used first. On areas 250 feet (76 m) or more from the centerline of runways, as shown on the plans, on which scarifiers will not produce clods of sufficient size and quantity to provide adequate control by the above operation, furrows shall be opened on approximately 36-inch (90 cm) centers to a depth of 5 inches (12 cm) by using an approved type lister. Tilling operations shall commence on the windward side of the field and at right angles to the prevailing wind except on runway shoulders, where they shall be parallel to the pavements. Equipment and operations, other than those specified above, may be used subject to the approval of the Engineer.

907-3.3 SMOOTH GRADING. Where final grades have been established by others, they shall be shown on the plans. Where grades have not been established, the areas shall be smooth graded and the surfaces left at the prescribed grades in an even and properly compacted condition which, insofar as practical, will prevent the formation of low places and pockets where water will stand.

METHOD OF MEASUREMENT

907-4.1 Tilling shall be measured by the number of acres (square meter), measured by surface area, tilled, smooth graded, and accepted.

BASIS OF PAYMENT

907-5.1 Payment will be made at the contract unit price per acre (square meter) for tilling. This price shall be full compensation for furnishing all materials and for all preparation, operation and smooth grading, and for all labor, equipment, tools and incidentals necessary to complete the item.

Payment will be made under:

Item T-907-5.1	Tilling—per acre (square meter)

END OF ITEM T-907

ITEM T-908 MULCHING

DESCRIPTION

908-1.1 This item shall consist of furnishing, hauling, placing, and securing mulch on surfaces indicated on the plans or designated by the Engineer.

MATERIALS

908-2.1 MULCH MATERIAL. Acceptable mulch shall be the materials listed below or any approved locally available material that is similar to those specified. Low grade, musty, spoiled, partially rotted hay, straw, or other materials unfit for animal consumption will be acceptable. Mulch materials, which contain matured seed of species that would volunteer and be detrimental to the proposed overseeding, or to surrounding farm land, will not be acceptable. Straw or other mulch material which is fresh and/or excessively brittle, or which is in such an advanced stage of decomposition as to smother or retard the planted grass, will not be acceptable.

a. Hay. Hay shall be native hay, sudan grass hay, broomsedge hay, legume hay, or similar hay or grass clippings.

b. Straw. Straw shall be the threshed plant residue of oats, wheat, barley, rye, or rice from which grain has been removed.

c. Hay Mulch Containing Seed. Hay mulch shall be mature hay containing viable seed of native grasses or other desirable species stated in the special provisions or as approved by the Engineer. The hay shall be cut and handled so as to preserve the maximum quantity of viable seed. Hay mulch that cannot be hauled and spread immediately after cutting shall be placed in weather-resistant stacks or baled and stored in a dry location until used.

d. Manufactured Mulch. Cellulose-fiber or wood-pulp mulch shall be products commercially available for use in spray applications.

e. Asphalt Binder. Asphalt binder material shall conform to the requirements of ASTM D 977, Type SS-1 or RS-1.

908-2.2 INSPECTION. Within 5 days after acceptance of the bid, the Engineer shall be notified of sources and quantities of mulch materials available and the Contractor shall furnish him with representative samples of the materials to be used. These samples may be used as standards with the approval of the Engineer and any materials brought on the site that do not meet these standards shall be rejected.

CONSTRUCTION METHODS

908-3.1 MULCHING. Before spreading mulch, all large clods, stumps, stones, brush, roots, and other foreign material shall be removed from the area to be mulched. Mulch shall be applied immediately after seeding. The spreading of the mulch may be by hand methods, blower, or other mechanical methods, provided a uniform covering is obtained.

Mulch material shall be furnished, hauled, and evenly applied on the area shown on the plans or designated by the Engineer. Straw or hay shall be spread over the surface to a uniform thickness at the rate of 2 to 3 tons per acre (1800-2700 kg per acre) to provide a loose depth of not less than 1-1/2 inches (37 cm) nor more than 3 inches (75 mm). Other organic material shall be spread at the rate directed by the Engineer. Mulch may be blown on the slopes and the use of cutters in the equipment for this purpose will be permitted to the extent that at least 95% of the mulch in place on the slope shall be 6 inches (150 mm) or more in length. When mulches applied by the blowing method are cut, the loose depth in place shall be not less than 1 inch (25 mm) nor more than 2 inches (50 mm).

908-3.2 SECURING MULCH. The mulch shall be held in place by light discing, a very thin covering of topsoil, small brush, pins, stakes, wire mesh, asphalt binder, or other adhesive material approved by the Engineer. Where mulches have been secured by either of the asphalt binder methods, it will not be permissible to walk on the slopes after the binder has been applied. The Contractor is warned that in the application of asphalt binder material he must take every precaution to guard against damaging or disfiguring structures or property on or adjacent to the areas worked and that he will be held responsible for any such damage resulting from his/her operations.

If the "peg and string" method is used, the mulch shall be secured by the use of stakes or wire pins driven into the ground on 5-foot (150 m) centers or less. Binder twine shall be strung between adjacent stakes in straight lines and crisscrossed diagonally over the mulch, after which the stakes shall be firmly driven nearly flush to the ground to draw the twine down tight onto the mulch.

908-3.3 CARE AND REPAIR.

a. The Contractor shall care for the mulched areas until final acceptance of the project. Such care shall consist of providing protection against traffic or other use by placing warning signs, as approved by the Engineer, and erecting any barricades that may be shown on the plans before or immediately after mulching has been completed on the designated areas.

b. The Contractor shall be required to repair or replace any mulching that is defective or becomes damaged until the project is finally accepted. When, in the judgment of the Engineer, such defects or damages are the result of poor workmanship or failure to meet the requirements of the specifications, the cost of the necessary repairs or replacement shall be borne by the Contractor. However, once the Contractor has completed the mulching of any area in accordance with the provisions of the specifications and to the satisfaction of the Engineer, no additional work at his/her expense will be required, but subsequent repairs and replacements deemed necessary by the Engineer shall be made by the Contractor and will be paid for as additional or extra work.

c. If the "asphalt spray" method is used, all mulched surfaces shall be sprayed with asphalt binder material so that the surface has a uniform appearance. The binder shall be uniformly applied to the mulch at the rate of approximately 8.0 gallons (32 liters) per 1,000 square feet (100 square meters), or as directed by the Engineer, with a minimum of 6.0 gallons (24 liters) and a maximum of 10 gallons (40 liters) per 1,000 square feet (100 square meters) depending on the type of mulch and the effectiveness of the binder securing it. Bituminous binder material may be sprayed on the mulched slope areas from either the top or the bottom of the slope. An approved spray nozzle shall be used. The nozzle shall be operated at a distance of not less than 4 feet (120 cm) from the surface of the mulch and uniform distribution of the bituminous material shall be required. A pump or an air compressor of adequate capacity shall be used to insure uniform distribution of the bituminous material.

d. If the "asphalt mix" method is used, the mulch shall be applied by blowing, and the asphalt binder material shall be sprayed into the mulch as it leaves the blower. The binder shall be uniformly applied to the mulch at the rate of approximately 8.0 gallons (32 liters) per 1,000 square feet (100 square meters) or as directed by the Engineer, with a minimum of 6.0 gallons (24 liters) and a maximum of 10 gallons (40 liters) per 1,000 square feet (100 square meters) depending on the type of mulch and the effectiveness of the binder securing it.

METHOD OF MEASUREMENT

908-4.1 Mulching shall be measured in square yards (square meters) on the basis of the actual surface area acceptably mulched.

BASIS OF PAYMENT

908-5.1 Payment will be made at the contract unit price per square yard (square meter) for mulching. The price shall be full compensation for furnishing all materials and for placing and anchoring the materials, and for all labor, equipment, tools, and incidentals necessary to complete the item.

Payment will be made under:

Item T-908-5.1	Mulching—per square yard (square meter)

MATERIAL REQUIREMENTS

ASTM D 977	Emulsified Asphalt

END OF ITEM T-908

Intentionally Left Blank

PART XI – LIGHTING INSTALLATION
ITEM L-101 AIRPORT ROTATING BEACONS

DESCRIPTION

101-1.1 This item shall consist of furnishing and installing airport rotating beacons. This work shall include the mounting, leveling, wiring, painting, servicing, and testing of the beacon and all materials and incidentals necessary to place the beacons in operating condition as a completed unit to the satisfaction of the Engineer. This item shall include a mounting platform if specified in the plans.

EQUIPMENT AND MATERIALS

101-2.1 GENERAL.

a. Airport lighting equipment and materials covered by Federal Aviation Administration (FAA) specifications shall be certified and listed under Advisory Circular (AC) 150/5345-53, Airport Lighting Equipment Certification Program.

b. All other equipment and materials covered by other referenced specifications shall be subject to acceptance through manufacturer's certification of compliance with the applicable specification when requested by the Engineer.

c. Manufacturer's certifications shall not relieve the Contractor of the Contractor's responsibility to provide materials in accordance with these specifications and acceptable to the Engineer. Materials supplied and/or installed that do not materially comply with these specifications shall be removed, when directed by the Engineer and replaced with materials, which do comply with these specifications, at the sole cost of the Contractor.

d. All materials and equipment used to construct this item shall be submitted to the Engineer for approval prior to ordering the equipment. Submittals consisting of marked catalog sheets or shop drawings shall be provided. Submittal data shall be presented in a clear, precise and thorough manner. Original catalog sheets are preferred. Photocopies are acceptable provided they are as good a quality as the original. Clearly and boldly mark each copy to identify pertinent products or models applicable to this project. Indicate all optional equipment and delete non-pertinent data. Submittals for components or electrical equipment and systems shall identify the equipment for which they apply on each submittal sheet. Markings shall be boldly and clearly made with arrows or circles (highlighting is not acceptable). Contractor is solely responsible for delays in project accruing directly or indirectly from late submissions or resubmissions of submittals.

e. The data submitted shall be sufficient, in the opinion of the Engineer, to determine compliance with the Contract Documents plans and specifications. [The Contractor's submittals shall be neatly bound in a properly sized 3-ring binder, tabbed by specification section.] The Engineer reserves the right to reject any and all equipment, materials or procedures, which, in the Engineer's opinion, does not meet the system design and the standards and codes, specified herein.

f. All equipment and materials furnished and installed under this section shall be guaranteed against defects in materials and workmanship for a period of at least [twelve (12) months] from final acceptance by the Owner. The defective materials and/or equipment shall be repaired or replaced, at the Owner's discretion, with no additional cost to the Owner.

* *

The engineer should specify the form in which submittals are to be received and number of copies.

The length of time for guarantee of materials and workmanship should be as stated in the contract between the owner and contractor and the contract special provisions.

* * * *

101-3.4 SERVICING. Before placing the beacon in operation, the Contractor shall check the manufacturer's manual for proper servicing requirements. Follow the manufacturer's servicing requirements for each size beacon.

101-3.5 BEAM ADJUSTMENT. After the beacon has been mounted and leveled, the elevation of the beams shall be adjusted. The final beam adjustments shall be made at night so that results can be readily observed. The beams shall be adjusted to the elevation directed by the Engineer or as shown in the plans, except that, in no case shall the elevation of the beams be less than 2 degrees above the horizontal.

101-3.6 BEACON MOUNTING PLATFORM. Where the beacon is to be mounted at a location other than the beacon tower and where a special mounting platform is required, the construction of this mounting platform and any necessary lightning protection equipment shall be in accordance with the details shown in the plans.

101-3.7 WIRING. The Contractor shall furnish all necessary labor and materials and shall make complete above ground electrical connections in accordance with the wiring diagram furnished with the project plans. The electrical installation shall conform to the requirements of the latest edition of National Fire Protection Association, NFPA-70, National Electric Code.

Copies of the National Electric Code may be obtained form the National Fire Protection Associations, Inc., One Batterymarch Park, Quincy, Massachusetts 02269.

If underground cable for the power feed from the transformer vault to the beacon site and duct for this cable installation is required, the cable, ground rods and duct shall be installed in accordance with and paid for as described in Item L-108, Underground Power Cable for Airports, and Item L-110, Airport Underground Electrical Duct Banks and Conduit.

Unless otherwise specified, the Contractor shall connect the tell-tale relay mechanism in the beacon to energize the tower obstruction light circuit when failure of the beacon service (primary) lamp occurs.

If lightning protection is specified in the plans or proposal as a part of this item, it shall be installed in accordance with 103-2.3 in Item L-103, Airport Beacon Towers.

101-3.8 PANEL AND CABINET. Unless otherwise specified, the Contractor shall furnish and install at the top of the beacon tower or mounting platform a circuit-breaker panel consisting of four 15-ampere breakers mounted in a weather-proof cabinet to provide separate protection for the circuits to the beacon lamps, motor, obstruction lights, and other equipment. The cabinet shall be located on the side of the beacon platform, as directed by the Engineer.

101-3.9 CONDUIT. All exposed wiring shall be run in not less than ¾ inch (19 mm) galvanized rigid steel conduit. No conduit shall be installed on top of a beacon platform floor. All conduit shall be installed to provide for drainage. If mounted on a steel beacon tower, the conduit shall be fastened to the tower members with "wraplock" straps, clamps, or approved fasteners, spaced approximately 5 feet (150 cm) apart. The conduit shall be fastened to wooden structures with galvanized pipe straps and with galvanized wood screws not less than No. 8 or less than 1-¼ inches (31 mm) long. There shall be at least two fastenings for each 10-foot (3 m) length.

101-3.10 BOOSTER TRANSFORMER. If shown in the plans or specified in job specifications, a booster transformer to compensate for voltage drop to the beacon shall be installed in a suitable weatherproof housing under or on the tower platform or at the base of the tower. The installation shall be as indicated in the plans and described in the proposal. If the booster transformer is required for installation remote from the beacon, it shall be installed in accordance with and paid for [ ].

* * * *

101-3.11 PHOTOELECTRIC CONTROL. If shown in the plans or specified in job specifications, the Contractor shall furnish and install an automatic control switch at the location indicated in the plans. The switch shall be a photoelectric type. It shall be a standard commercially available unit that will energize when the northern sky illuminance falls below 60 footcandles (645.8 lux) but before reaching a level of 35 footcandles (367.7 lux). The photoelectric switch should de-energize when the northern sky illuminance rises to a level of not more than 60 footcandles (645.9 lux). It shall be installed, connected, and adjusted in accordance with the manufacturer's instructions.

101-3.12 OBSTRUCTION LIGHTS. Unless otherwise specified, the Contractor shall install on the top of the beacon tower or mounting platform two L-810 obstruction lights on opposite corners. These lights shall be mounted on conduit extensions to a height of not less than 4 inches (100 mm) above the top of the beacon. They shall be connected in series into the tell-tale circuit with the necessary relay and wiring connections.

101-3.13 PAINTING. If construction of a wooden mounting platform is stipulated in the proposal as part of this item, all wooden parts of the platform shall be given one priming coat of white or aviation-orange paint after fabrication but before erection and one body and one finish coat of aviation-orange paint after erection. Steel mounting platforms shall be given one priming coat of corrosion-inhibiting primer before erection and one body and one finish coat of aviation-orange paint after erection. All equipment installed under this contract and exposed to the weather shall be given one body and one finish coat of aviation-orange or white paint as required. This shall include beacon (except glass surfaces), beacon base, breaker cabinet, all conduit, and transformer cases. It shall not include air terminals or obstruction light globes.

The paint shall be applied uniformly in the proper consistency by skilled painters. The finished paint shall be free from sags, holidays, and smears. Each coat of paint shall be given ample time to dry and harden before the next coat of paint is applied. A minimum of 3 days shall be allowed for drying on wood surfaces, and a minimum of 4 days shall be allowed for drying on metal surfaces. Painting shall not be done in cold, damp, foggy, dusty, or frosty atmospheres, or when air temperature is below 40º F (4º C), nor started when the weather forecast indicates such conditions for the day.

All surfaces shall be cleaned before painting. The surfaces shall be dry and free from scale, grease, rust, dust, and dirt when paint is applied. All knots in wood surfaces shall be covered with shellac immediately before applying the priming coat of paint. Nail holes and permissible imperfections shall be filled with putty. The ready-mixed paint shall be thinned for the priming and body coats in accordance with the manufacturer's recommendations. In the absence of such recommendations, the following shall apply:

a. Body coats (for both wood and steel surfaces) - add ½ pint (0.06 liter) of turpentine to each gallon (liter) of ready-mixed paint for body coats.

b. Finish coats (for both wood and steel surfaces) the ready-mixed paint shall be used as it comes from the container for finish coats.

101-3.14 TESTING. The installation shall be fully tested in operation as a completed unit prior to acceptance. These tests shall include operation of the lamp-changer operation and taking megger and voltage readings. The insulation resistance to ground of the beacon supply circuit shall be not less than 50 megohms. Testing equipment shall be furnished by the Contractor. Tests shall be conducted in the presence of the Engineer and shall be to the Engineer’s satisfaction.

METHOD OF MEASUREMENT

101-4.1 The quantity to be paid for shall be the number of beacons installed as completed units in place, accepted, and ready for operation.

BASIS OF PAYMENT

101-5.1 Payment will be made at the contract unit price for each completed and accepted job. This price shall be full compensation for furnishing all materials and for all preparation, assembly, and installation of these materials, and for all labor, equipment, tools, and incidentals necessary to complete this item.

Payment will be made under:

Item L-101-5.1	Airport Rotating Beacon, in place—per unit

MATERIAL REQUIREMENTS

AC 150/5345-7	Specification for L-824 Underground Cable for Airport Lighting Circuits
AC 150/5345-12	Specification for Airport and Heliport Beacons
FED SPEC J-C-30	Cable and Wire, Electrical (Power, Fixed Installation) (cancelled; replaced by A-A-59544 Cable and Wire, Electrical (Power, Fixed Installation))
FED SPEC TT-E-489	Enamel, Alkyd, Gloss, Low VOC Content
FED SPEC TT-P-664D	Primer Coating, Alkyd, Corrosion-Inhibiting, Lead and Chromate Free, VOC-Compliant
FED SPEC W-P-115	Panel, Power Distribution
FED STD 595	Colors Used in Government Procurement
MIL-P-24441/19B	Paint, Epoxy-Polyamide, Zinc Primer, Formula 159, Type III
Underwriters Laboratories Standard 6	Rigid Metal Conduit
Underwriters Laboratories Standard 514	Fittings for Conduit and Outlet Boxes
Underwriters Laboratories Standard 1242	Intermediate Metal Conduit
NFPA-70	National Electric Code
NFPA-780	Standard for the Installation of Lightning Protection Systems
Master Painter's Institute	

END OF ITEM L-101

Intentionally Left Blank

ITEM L-102 HAZARD BEACON

DESCRIPTION

102-1.1 This item shall consist of furnishing and installing a hazard flashing beacon in accordance with these specifications. This work shall include the mounting, leveling, wiring, servicing, painting, and testing of the beacon and all materials and incidentals necessary to place it in operating condition as a completed unit to the satisfaction of the Engineer. This item shall include a mounting platform if specified in the plans.

EQUIPMENT AND MATERIALS

102-2.1 GENERAL.

a. Airport lighting equipment and materials covered by Federal Aviation Administration (FAA) specifications shall be certified and listed under Advisory Circular (AC) 150/5345-53, Airport Lighting Equipment Certification Program.

b. All other equipment and materials covered by other referenced specifications shall be subject to acceptance through manufacturer's certification of compliance with the applicable specification, when requested by the Engineer.

c. Manufacturer's certifications shall not relieve the Contractor of the Contractor's responsibility to provide materials in accordance with these specifications and acceptable to the Engineer. Materials supplied and/or installed that do not materially comply with these specifications shall be removed, when directed by the Engineer and replaced with materials, which do comply with these specifications, at the sole cost of the Contractor.

d. All materials and equipment used to construct this item shall be submitted to the Engineer for approval prior to ordering the equipment. Submittals consisting of marked catalog sheets or shop drawings shall be provided. Submittal data shall be presented in a clear, precise and thorough manner. Original catalog sheets are preferred. Photocopies are acceptable provided they are as good a quality as the original. Clearly and boldly mark each copy to identify pertinent products or models applicable to this project. Indicate all optional equipment and delete non-pertinent data. Submittals for components of electrical equipment and systems shall identify the equipment for which they apply on each submittal sheet. Markings shall be boldly and clearly made with arrows or circles (highlighting is not acceptable). Contractor is solely responsible for delays in project accruing directly or indirectly from late submissions or resubmissions of submittals.

e. The data submitted shall be sufficient, in the opinion of the Engineer, to determine compliance with the plans and specifications. [The Contractor's submittals shall be neatly bound in a properly sized 3-ring binder, tabbed by specification section.] The Engineer reserves the right to reject any and all equipment, materials or procedures, which, in the Engineer's opinion, does not meet the system design and the standards and codes, specified herein.

f. All equipment and materials furnished and installed under this section shall be guaranteed against defects in materials and workmanship for a period of at least [twelve (12) months] from final acceptance by the Owner. The defective materials and/or equipment shall be repaired or replaced, at the Owner's discretion, with no additional cost to the Owner.

* * * *

The length of time for guarantee of materials and workmanship should be as stated in the contract between the owner and contractor and the contract special provisions.

* * * *

102-3.3 FLASHER. If shown in plans or specified in job specifications, a separate flashing mechanism for the beacon shall be installed adjacent or near the beacon. The mechanism in this flasher shall be designed to flash not more than 40 and not less than 12 flashes per minute.

102-3.4 MOUNTING PLATFORM. If shown in plans or specified in job specifications, the Contractor shall construct a special mounting platform for the beacon, flasher, and incidental equipment. Design and materials for the special platform shall be as shown in the plans. This mounting platform may be constructed on top of a steel beacon tower, or wood pole if specified, and shall be as shown in the plans.

102-3.5 WIRING. The Contractor shall furnish all necessary labor and materials and shall make complete aboveground electrical connections in accordance with the wiring diagram furnished with the project plans. The electrical installation shall conform to the requirements of the latest edition of National Fire Protection Association, NFPA-70, National Electric Code.

If underground cable for the power feed from the transformer vault to the beacon site and duct for the installation of this cable is required, the cable, ground rods and duct shall be installed in accordance with and paid for as described in Item L-108, Underground Power Cable for Airports, and Item L-110, Airport Underground Electrical Duct Banks and Conduit.

If lightning protection is specified in the plans or proposals as a part of this item, it shall be in accordance with Item L-103, Airport Beacon Towers, paragraphs 103-2.3.

102-3.6 PANEL AND CABINET. If shown in plans or specified in job specifications, the Contractor shall furnish and install a circuit breaker panel. The panel shall be of the type and rating indicated in the plans, and it shall be mounted in a weatherproof cabinet. The cabinet shall be located near the beacon or as directed by the Engineer.

102-3.7 CONDUIT. All exposed wiring shall be run in not less than ¾ inch (19 mm) galvanized rigid steel conduit. No conduit shall be installed on top of a beacon platform floor. All conduit shall be installed to provide for drainage. If mounted on a steel beacon tower, the conduit shall be fastened to the tower members with “wraplock” straps, clamps, or approved fasteners spaced approximately 5 feet (150 cm) apart. Conduit shall be attached to wooden structures with galvanized pipe straps and fastened with galvanized wood screws not less than No. 8 or less than 1-¼ inches (31 mm) long. There shall be at least two fastenings for each 10-foot (3 m) length.

102-3.8 BOOSTER TRANSFORMERS. If shown in plans or specified in job specifications, a booster transformer to compensate for voltage drop to the beacon shall be installed in a suitable weatherproof housing under or on the tower platform or at the base of the tower or pole. The installation shall be as indicated in the plans and described in the proposal. If the booster transformer is required for installation remotely from the beacon, it shall be installed in accordance with and paid for [ ].

* * * *

102-3.10 PAINTING. Wood poles and wooden parts of mounting platforms shall be given one priming coat of white or aviation-orange paint after fabrication but before erection and one body and one finish coat of aviation-orange paint after erection. Steel mounting platforms shall be given one priming coat of corrosion-inhibiting primer before erection and one body and one finish coat of aviation-orange paint after erection. All equipment under this contract and exposed to the weather shall be given one body and one finish coat of aviation-orange or white paint as required. This shall include beacon (except glass surfaces), breaker cabinet, and all conduit and transformer cases. It shall not include air terminals.

The paint shall be applied uniformly in the proper consistency by skilled painters. The finished paint shall be free from sags, holidays, and smears. Each coat of paint shall be given ample time to dry and harden before the next coat of paint is applied. A minimum of 3 days shall be allowed for drying on wood surfaces and a minimum of 4 days shall be allowed for drying on metal surfaces. Painting shall not be done in cold, damp, foggy, dusty, or frosty atmospheres, or when air temperature is below 40º F (4º C), nor started when the weather forecast indicates such conditions for the day.

All surfaces shall be cleaned before painting. The surfaces shall be dry and free from scale, grease, rust, dust, and dirt when paint is applied. All knots in wood surfaces shall be covered with shellac immediately before applying the priming coat of paint. Nail holes and permissible imperfections shall be filled with putty.

The ready-mixed paint shall be thinned for the priming and body coats in accordance with the manufacturer's recommendations. In the absence of such recommendations, the following shall apply:

a. Body coats (for both wood and steel surfaces) - add ½ pint (0.06 liters) of turpentine to each gallon (liter) of ready-mixed paint for body coats.

b. Finish coats (for both wood and steel surfaces) - the ready-mixed paint shall be used as it comes from the container for finish coats.

102-3.11 TESTING. The installation shall be tested in operation as a completed unit prior to acceptance. Tests shall include taking megger and voltage readings. The voltage tolerance for testing shall be as specified by the beacon manufacturer. Testing equipment shall be furnished by the Contractor. The insulation resistance to ground of the beacon supply circuit shall be not less than 50 megohms when measured ungrounded.

Tests shall be conducted in the presence of the Engineer and shall be to the Engineer’s satisfaction.

METHOD OF MEASUREMENT

102-4.1 The quantity to be paid for shall be the number of beacons installed as completed units in place, accepted, and ready for operation.

BASIS OF PAYMENT

102-5.1 Payment will be made at the contract unit price for each completed and accepted job. This price shall be full compensation for furnishing all materials and for all preparation, assembly, and installation of these materials, and for all labor, equipment, tools, and incidentals necessary to complete this item.

Payment will be made under:

Item L-102-5.1	Hazard Beacon, in place—per unit

MATERIAL REQUIREMENTS

AC 150/5345-7	Specification For L-824 for Underground Electrical Cable for Airport Lighting Circuits
AC 150/5345-43	Specification for Obstruction Lighting Equipment
FED SPEC J-C-30	Cable and Wire, Electrical (Power, Fixed Installation) (cancelled; replaced by AA-59544 Cable and Wire, Electrical (Power, Fixed Installation))
FED SPEC TT-E-489	Enamel, Alkyd, Gloss, Low VOC Content
FED SPEC TT-P-664D	Primer Coating, Alkyd, Corrosion-Inhibiting, Lead and Chromate Free, VOC-Compliant
MIL-DTL-24441/19B	Paint, Epoxy-Polyamide, Zinc Primer, Formula 159, Type III
FED SPEC W-P-115	Panel, Power Distribution
FED STD 595	Colors Used in Government Procurement
Underwriters Laboratories Standard 6	Rigid Metal Conduit
Underwriters Laboratories Standard 514	Fittings for Conduit and Outlet Boxes
Underwriters Laboratories Standard 1242	Intermediate Metal Conduit
NFPA-70	National Electric Code
NFPA-780	Standard for the Installation of Lightning Protection Systems
Master Painter's Institute	

END OF ITEM L-102

Intentionally Left Blank

ITEM L-103 AIRPORT BEACON TOWERS

DESCRIPTION

103-1.1 This item shall consist of furnishing and installing an airport beacon tower of the type shown in the plans, in accordance with these specifications. This work shall include the clearing of the site, erection of the tower, installation of lightning protection, painting, and all incidentals necessary to place it in operating condition as a completed unit to the satisfaction of the Engineer.

EQUIPMENT AND MATERIALS

103-2.1 GENERAL.

a. All equipment and materials covered by referenced specifications shall be subject to acceptance through manufacturer's certification of compliance with the applicable specification when requested by the Engineer.

b. Manufacturer's certifications shall not relieve the Contractor of the Contractor's responsibility to provide materials in accordance with these specifications and acceptable to the Engineer. Materials supplied and/or installed that do not materially comply with these specifications shall be removed, when directed by the Engineer and replaced with materials, which do comply with these specifications, at the sole cost of the Contractor.

c. All materials and equipment used to construct this item shall be submitted to the Engineer for approval prior to ordering the equipment. Submittals consisting of marked catalog sheets or shop drawings shall be provided. Submittal data shall be presented in a clear, precise and thorough manner. Original catalog sheets are preferred. Photocopies are acceptable provided they are as good a quality as the original. Clearly and boldly mark each copy to identify pertinent products or models applicable to this project. Indicate all optional equipment and delete non-pertinent data. Submittals for components of electrical equipment and systems shall identify the equipment for which they apply on each submittal sheet. Markings shall be boldly and clearly made with arrows or circles (highlighting is not acceptable). Contractor is solely responsible for delays in project accruing directly or indirectly from late submissions or resubmissions of submittals.

d. The data submitted shall be sufficient, in the opinion of the Engineer, to determine compliance with the plans and specifications. [The Contractor's submittals shall be neatly bound in a properly sized 3-ring binder, tabbed by specification section.] The Engineer reserves the right to reject any and all equipment, materials or procedures, which, in the Engineer's opinion, does not meet the system design and the standards and codes, specified herein.

e. All equipment and materials furnished and installed under this section shall be guaranteed against defects in materials and workmanship for a period of at least [twelve (12) months] from final acceptance by the Owner. The defective materials and/or equipment shall be repaired or replaced, at the Owner's discretion, with no additional cost to the Owner.

* * * *

103-2.3 LIGHTNING PROTECTION. Lightning protection shall comply with NFPA-780, Standard for the Installation of Lightning Protection Systems. All materials shall comply with Class II requirements regardless of tower height. Ground rods and underground cables shall be installed in accordance with and paid for as described in Item L-108, Underground Power Cable for Airports.

103-2.4 PAINT.

a. Priming paint for galvanized steel towers shall be zinc dust-zinc oxide primer paint conforming to MIL-DTL-24441/19B. If necessary, add not more than 1/2 pint (0.06 liter) of turpentine to each gallon (liter).

b. Priming paint for ungalvanized steel towers shall be a high solids alkyd primer conforming to the Master Painter's Institute, Reference #9, Exterior Alkyd, Gloss, VOC Range E2.

c. Orange paint for the body and finished coats on metal and wood surfaces shall consist of a ready-mixed non-fading paint meeting the requirements of Fed. Spec. TT-E-489. The color shall be in accordance with Federal Standard 595, Aviation Gloss Orange Number 12197.

d. White paint for steel tower shall be ready-mixed paint conforming to Commercial Item Description A-A-3067.

CONSTRUCTION METHODS

103-3.1 CLEARING AND GRADING. The site on which the beacon tower is to be erected shall be cleared and leveled. All trees and brush shall be removed from the area within a distance of 25 feet (7.5 m) from the tower or as called for in the plans. Stumps shall be removed to a depth of 18 inches (45 cm) below finished grade and the excavation filled with earth and tamped. If a transformer vault or other structure is included as part of the installation, the area shall be cleared to a distance of 25 feet (7.5 m) from these structures. The ground near the tower shall be leveled to permit the operation of mowing machines. The leveling shall extend at least 2 feet (60 cm) outside the tower legs. All debris removed from the tower site shall be disposed of by the Contractor to the satisfaction of the Engineer and in accordance with Federal, state, or local regulations.

103-3.2 EXCAVATION AND FILL. Excavation for the tower footings shall be carried to a minimum of 4 inches (100 mm) below the footing depth. The excess excavation below the footing depth shall then be backfilled with gravel or crushed stone and compacted to the required level. The footing plates shall be installed, and a thickness of not less than 18 inches (45 cm) of the same gravel or crushed stone shall be placed immediately above the footing plates in layers of not over 6 inches (150 mm). Each layer above the footing plates shall be thoroughly tamped in place. The remainder of the backfill may be of excavated earth placed in layers not to exceed 6 inches (150 mm). Each layer shall be thoroughly compacted by tamping.

Where solid rock is encountered, which prevents the carrying of the foundation legs to the required depth but which is of sufficient strength to use holddown bolts, the tower anchor posts shall be cut off at the required length and the holddown bolts shall be installed as indicated in the plans with the approval of the Engineer. Each tower leg shall be anchored to the rock by means of two 7/8-inch (21 mm) diameter by 3-foot (90 cm) long expansion or split bolts and shall be grouted with neat portland cement into holes drilled into the natural rock. Except as required for rock foundations, the footing members shall not be cut off or shortened. If excavated material is of such character that it will not readily compact when backfilled, the Engineer may order the excavation backfilled with concrete or other suitable material.

The concrete footing for tubular beacon towers shall be installed in accordance with the manufacturer's recommendations. Portions of the footing in the topsoil layer shall not be included in the footing height.

103-3.3 ERECTION. Detail erection drawings furnished by the manufacturer shall be strictly followed during construction. All towers shall be erected in sections from the ground up unless otherwise specified. In final assembly, all bolts and fastenings shall be installed, and the structure shall be plumb, true, square, and level. Nuts

shall be taken up to a firm bearing after which the bolts shall, if necessary, be cut to proper length to protrude three full threads. Approved locknuts shall be placed on each bolt over the regular nut. Ladder bolts shall be inserted with the head to the outer face of the tower. Diagonal, leg, and handrail bolts shall be installed with nuts on the outer face of the tower, unless otherwise specified. Bent parts shall be straightened before erection without damage to the protective coating. Surfaces abraded or bared of protective coating shall be painted with the proper priming paint as specified in these specifications.

The Contractor shall install the ladder on the side of the tower adjacent to the driveway or most accessible approach to the tower. Tubular beacon towers shall be erected in accordance with the manufacturer's recommendations. The safety cable shall be located on the side of the tower adjacent to the driveway or most accessible approach to the tower.

103-3.4 LIGHTNING PROTECTION. The Contractor shall furnish and install an air terminal, down conductor, and at least one ground plate or rod for each beacon tower or as indicated in the plans. The air terminal shall be installed at the top of the tower with the tip of the rod extending not less than 6 inches (150 mm) above the top of the beacon.

Down-conductor cables shall be securely fastened to the surface of the tower leg at 5-foot (150 cm) intervals with suitable bronze fasteners having bronze or noncorrosive metal bolts. Sharp turns or bends in the down conductor will not be permitted.

All connections of cable to cable, cable to air terminals, and cable to ground plates or rods shall be made with solderless connectors or noncorrosive metal approved by the engineer and shall be of substantial construction.

The down-conductor cable shall be securely attached to ground rods or plates placed at least 2 feet (60 cm) away from the tower foundations. The ground rod shall be driven into the ground so that the top is at least 6 inches (150 mm) below grade. The down-conductor shall be firmly attached to the ground plate or rod by means of a ground connector or clamp. Plates shall be embedded in the area of permanent moisture.

The complete lightning protection installation shall be accomplished to the satisfaction of the Engineer. The resistance to ground of any part of the lightning protection system shall not exceed 25 ohms.

103-3.5 PAINTING. The Contractor shall furnish all materials and labor for painting the beacon tower. The color scheme for the steel tower shall be as shown in the plans.

a. Parts to be Painted. Tower parts (except those parts to be exposed to earth) shall not be treated or primed before erection. All tower parts placed below ground level or within 12 inches (300 mm) above ground level shall be given two coats of approved bituminous paint.

The paint shall be applied uniformly in the proper consistency by skilled painters. The finished paint shall be free from sags, holidays, and smears. Division lines between colors shall be sharply defined. Each coat of paint shall be given ample time to dry and harden before the next coat is applied. A minimum of 4 days shall be allowed for drying on metal surfaces. Painting shall not be done in cold, damp, foggy, dusty, or frosty atmospheres, or when air temperature is below 40º F (4º C), nor started when the weather forecast indicates such conditions for the day.

All surfaces shall be cleaned before painting. The surfaces shall be dry and free from scale, grease, rust, dust, and dirt when paint is applied.

The number of coats of paint applied shall be in accordance with the following instructions:

b. Steel Towers, Galvanized. One priming coat of zinc dust-zinc oxide primer after erection and one body and one finish of white or orange paint (as required by the color scheme) shall be applied after erection.

c. Steel Towers, Not Galvanized. One priming coat of corrosion-inhibiting primer and one body and one finish coat of white or orange paint (as required by the color scheme) shall be applied after erection.

The above specified orange and white ready-mixed paints shall be thinned for the body coats in accordance with the manufacturer's recommendations. In the absence of such recommendations, the following shall apply:

d. Body Coats. Add not more than 1/2 pint (0.06 liters) of turpentine to each gallon (liter) of ready-mixed paint for body coats.

e. Finish Coats. The ready-mixed paint shall be used as it comes from the container for finish coats.

METHOD OF MEASUREMENT

103-4.1 The quantity to be paid for under this item shall be the number of airport beacon towers installed as completed units in place, accepted, and ready for operation.

BASIS OF PAYMENT

103 5.1 Payment will be made at the contract unit price for each completed and accepted job. This price shall be full compensation for furnishing all materials and for all preparation, assembly, and installation of these materials, and for all labor, equipment, tools, and incidentals necessary to complete this item.

Payment will be made under:

Item L-103-5.1	Beacon Tower, in place-per unit

MATERIAL REQUIREMENTS

AC 150/5340-30	Design and Installation Details for Airport Visual Aids
FED SPEC TT-E-489	Enamel, Alkyd, Gloss, Low VOC Content
FED STD 595	Colors Used in Government Procurement
MIL-DTL-24441/19B	Paint, Epoxy-Polyamide, Zinc Primer, Formula 159, Type III
NFPA-780	Standard for the Installation of Lightning Protection Systems
Master Painter’s Institute	

END OF ITEM L-103

ITEM L-107 AIRPORT 8-FOOT AND 12-FOOT WIND CONES

DESCRIPTION

107-1.1 This item shall consist of furnishing and installing an airport wind cone in accordance with these specifications and in accordance with the dimensions, design, and details shown in the plans.

The work shall include the furnishing and installation of a support for mounting the wind cone, the specified wire, and a concrete foundation. The item shall also include all cable connections, conduit and conduit fittings, the furnishing and installation of all lamps, ground rod and ground connection, the testing of the installation, and all incidentals necessary to place the wind cone in operation as a completed unit to the satisfaction of the Engineer.

EQUIPMENT AND MATERIALS

107-2.1 GENERAL.

a. Airport lighting equipment and materials covered by Federal Aviation Administration (FAA) specifications shall be certified and listed under Advisory Circular (AC) 150/5345-53, Airport Lighting Equipment Certification Program.

b. All other equipment and materials covered by other referenced specifications shall be subject to acceptance through manufacturer's certification of compliance with the applicable specification when requested by the Engineer.

c. Manufacturer's certifications shall not relieve the Contractor of the Contractor's responsibility to provide materials in accordance with these specifications and acceptable to the Engineer. Materials supplied and/or installed that do not materially comply with these specifications shall be removed, when directed by the Engineer and replaced with materials, which do comply with these specifications, at the sole cost of the Contractor.

d. All materials and equipment used to construct this item shall be submitted to the Engineer for approval prior to ordering the equipment. Submittals consisting of marked catalog sheets or shop drawings shall be provided. Submittal data shall be presented in a clear, precise and thorough manner. Original catalog sheets are preferred. Photocopies are acceptable provided they are as good a quality as the original. Clearly and boldly mark each copy to identify pertinent products or models applicable to this project. Indicate all optional equipment and delete non-pertinent data. Submittals for components of electrical equipment and systems shall identify the equipment for which they apply on each submittal sheet. Markings shall be boldly and clearly made with arrows or circles (highlighting is not acceptable). Contractor is solely responsible for delays in project accruing directly or indirectly from late submissions or resubmissions of submittals.

e. The data submitted shall be sufficient, in the opinion of the Engineer, to determine compliance with the plans and specifications. [The Contractor's submittals shall be neatly bound in a properly sized 3-ring binder, tabbed by specification section.] The Engineer reserves the right to reject any and all equipment, materials or procedures, which, in the Engineer's opinion, does not meet the system design and the standards and codes, specified herein.

f. All equipment and materials furnished and installed under this section shall be guaranteed against defects in materials and workmanship for a period of at least [twelve (12) months] from final acceptance by the Owner. The defective materials and/or equipment shall be repaired or replaced, at the Owner's discretion, with no additional cost to the Owner.

* * * *

The length of time for guarantee of materials and workmanship should be as stated in the contract between the owner and contractor and the contract special provisions.

* * * *

d. White paint for body and finish coats on metal and wood surfaces shall be ready-mixed paint conforming to the Master Painter's Institute, Reference #9, Exterior Alkyd, Gloss, VOC Range E2.

e. Priming paint for wood surfaces shall be mixed on the job by thinning the above specified aviation-orange or white paint by adding ½ pint (0.06 liter) of raw linseed oil to each gallon (liter).

CONSTRUCTION METHODS

107-3.1 INSTALLATION. The hinged support or hinged pole shall be installed on a concrete foundation as shown in the plans.

107-3.2 POLE ERECTION. The Contractor shall erect the pole on the foundation following the manufacturer's requirements and erection details. The pole shall be level and secure.

107-3.3 ELECTRICAL CONNECTION. The Contractor shall furnish all labor and materials and shall make complete electrical connections in accordance with the wiring diagram furnished with the project plans. The electrical installation shall conform to the requirements of the latest edition of National Fire Protection Association, NFPA-70, National Electric Code.

If underground cable from the transformer vault to the wind cone site and duct for this cable installation is required, the cable and duct shall be installed in accordance with and paid for as described in Item L-108, Underground Power Cables for Airports, and Item L-110, Airport Underground Electrical Duct Banks and Conduits.

107-3.4 BOOSTER TRANSFORMER. If shown in plans or specified in job specifications, a booster transformer to compensate for voltage drop to the lamps shall be installed in a suitable weatherproof housing. The booster transformer shall be installed as indicated in the plans and described in the proposal. If the booster transformer is required for installation remotely from the windcone, it shall be installed in accordance with and paid for [ ].

* * * *

A padlock shall also be furnished by the Contractor on the 8-foot (240 cm) wind cone for securing the hinged top section to the fixed lower section. Keys for the padlock shall be delivered to the Engineer.

METHOD OF MEASUREMENT

107-4.1 The quantity to be paid for shall be the number of wind cones installed as completed units in place, accepted, and ready for operation.

BASIS OF PAYMENT

107-5.1 Payment will be made at the contract unit price for each completed and accepted job. This price shall be full compensation for furnishing all materials and for all preparation, assembly, and installation of these materials, and for all labor, equipment, tools, and incidentals necessary to complete this item.

Payment will be made under:

Item L-107-5.1	12-Foot (3.5 m) Wind Cone, in place—per unit
Item L-107-5.2	8-Foot (240 cm) Wind Cone, in place—per unit

MATERIAL REQUIREMENTS

AC 150/5345-7	Specification for L-824 Underground Cable for Airport Lighting Circuits
AC 150/5345-27	Specification for Wind Cone Assemblies
FED SPEC TT-E-489	Enamel, Alkyd, Gloss, Low VOC Content
FED SPEC J-C-30	Cable and Wire, Electrical (Power, Fixed Installation) (cancelled; replaced by AA-59544 Cable and Wire, Electrical (Power, Fixed Installation))
FED SPEC W-P-115	Panel, Power Distribution
FED STD 595	Colors Used in Government Procurement
MIL-DTL-24441/20	Paint, Epoxy-Polyamide, Green Primer, Formula 150, Type III
Underwriters Laboratories Standard 6	Rigid Metal Conduit
Underwriters Laboratories Standard 514	Fittings For Conduit and Outlet Boxes
Underwriters Laboratories Standard 1242	Intermediate Metal Conduit
NFPA-70	National Electric Code
Master Painter's Institute	

END OF ITEM L-107

ITEM L-108 UNDERGROUND POWER CABLE FOR AIRPORTS

DESCRIPTION

108-1.1 This item shall consist of furnishing and installing power cables direct buried and furnishing and/or installing power cables within conduit or duct banks-in accordance with these specifications at the locations shown on the plans. It includes excavation and backfill of trench for direct-buried cables only. Also included are the installation of counterpoise wires, ground wires, ground rods and connections, cable splicing, cable marking, cable testing, and all incidentals necessary to place the cable in operating condition as a completed unit to the satisfaction of the Engineer. This item shall not include the installation of duct banks or conduit, trenching and backfilling for duct banks or conduit, or furnishing or installation of any cable for FAA facilities. Requirements and payment for trenching and backfilling for the installation of underground conduit and duct banks is covered under Item L-110 "Airport Underground Electrical Duct Banks and Conduits."

EQUIPMENT AND MATERIALS

108-2.1 GENERAL.

a. Airport lighting equipment and materials covered by Federal Aviation Administration (FAA) specifications shall be approved under the Airport Lighting Equipment Certification Program described in Advisory Circular (AC) 150/5345-53, current version.

b. All other equipment and materials covered by other referenced specifications shall be subject to acceptance through manufacturer's certification of compliance with the applicable specification, when requested by the Engineer.

c. Manufacturer's certifications shall not relieve the Contractor of the Contractor's responsibility to provide materials in accordance with these specifications and acceptable to the Engineer. Materials supplied and/or installed that do not materially comply with these specifications shall be removed, when directed by the Engineer and replaced with materials, which do comply with these specifications, at the sole cost of the Contractor.

d. All materials and equipment used to construct this item shall be submitted to the Engineer for approval prior to ordering the equipment. Submittals consisting of marked catalog sheets or shop drawings shall be provided. Submittal data shall be presented in a clear, precise and thorough manner. Original catalog sheets are preferred. Photocopies are acceptable provided they are as good a quality as the original. Clearly and boldly mark each copy to identify pertinent products or models applicable to this project. Indicate all optional equipment and delete non-pertinent data. Submittals for components of electrical equipment and systems shall identify the equipment for which they apply on each submittal sheet. Markings shall be boldly and clearly made with arrows or circles (highlighting is not acceptable). Contractor is solely responsible for delays in project accruing directly or indirectly from late submissions or resubmissions of submittals.

e. The data submitted shall be sufficient, in the opinion of the Engineer, to determine compliance with the plans and specifications. [The Contractor's submittals shall be neatly bound in a properly sized 3-ring binder, tabbed by specification section.] The Engineer reserves the right to reject any and all equipment, materials or procedures, which, in the Engineer's opinion, does not meet the system design and the standards and codes, specified herein.

f. All equipment and materials furnished and installed under this section shall be guaranteed against defects in materials and workmanship for a period of at least [twelve (12) months] from final acceptance by the Owner. The defective materials and/or equipment shall be repaired or replaced, at the Owner's discretion, with no additional cost to the Owner. The Contractor shall be responsible to maintain an insulation resistance of 50 megohms minima, (1000V megger) with isolation transformers connected in new circuits and new segments of existing circuits through the end of the contract warranty period.

* * * *

d. The Taped or Heat-Shrinked Splice. Taped splices employing field-applied rubber, or synthetic rubber tape covered with plastic tape is acceptable. The rubber tape should meet the requirements of ASTM D 4388 and the plastic tape should comply with Mil Spec. MIL-I-24391or Fed. Spec. A-A-55809. Heat shrinkable tubing shall be heavy-wall, self-sealing tubing rated for the voltage of the wire being spliced and suitable for direct-buried installations. The tubing shall be factory coated with a thermoplastic adhesive-sealant that will adhere to the insulation of the wire being spliced forming a moisture- and dirt-proof seal. Additionally, heat shrinkable tubing for multi-conductor cables, shielded cables, and armored cables shall be factory kits designed for the application. Heat shrinkable tubing and tubing kits shall be manufactured by Tyco Electronics/ Raychem Corporation, Energy Division, or approved equivalent.

e. In all the above cases, connections of cable conductors shall be made using crimp connectors utilizing a crimping tool designed to make a complete crimp before the tool can be removed. All L-823/L-824 splices and terminations shall be made in accordance with the manufacturer's recommendations and listings.

f. All connections of counterpoise, grounding conductors and ground rods shall be made by the exothermic process or approved equivalent, except the base can ground clamp connector shall be used for attachment to the base can. All exothermic connections shall be made in accordance with the manufacturer's recommendations and listings.

108-2.5 SPLICER QUALIFICATIONS. Every airfield lighting cable splicer shall be qualified in making cable splices and terminations on cables rated above 5,000 volts AC. The Contractor shall submit to the Engineer proof of the qualifications of each proposed cable splicer for the cable type and voltage level to be worked on. Cable splicing/terminating personnel shall have a minimum of three (3) years continuous experience in terminating/splicing medium voltage cable.

108-2.6 CONCRETE. Concrete for cable markers shall conform to Specification Item P-610, ``Structural Portland Cement Concrete."

108-2.7 FLOWABLE BACKFILL. Flowable material used to backfill trenches for power cable trenches shall conform to the requirements of Item P-153 "Controlled Low Strength Material".

108-2.8 CABLE IDENTIFICATION TAGS. Cable identification tags shall by made from a non-corrosive material with the circuit identification stamped or etched onto the tag. The tags shall be of the type as detailed on the plans.

108-2.9 TAPE. Electrical tapes shall be Scotch Electrical Tapes – number Scotch 88 (1-1/2" wide) and Scotch 130C linerless rubber splicing tape (2" wide), as manufactured by the Minnesota Mining and Manufacturing Company, or approved equivalent.

108-2.10 ELECTRICAL COATING. Scotchkote shall be as manufactured by Minnesota Mining and Manufacturing Company, or approved equivalent.

108-2.11 EXISTING CIRCUITS. Whenever the scope of work requires, connection to an existing circuit, the circuit's insulation resistance shall be tested, in the presence of the Engineer. The test shall be performed in accordance with this item and prior to any activity affecting the respective circuit. The Contractor shall record the results on forms acceptable to the engineer. When the work affecting the circuit is complete, the circuit's insulation resistance shall be checked again, in the presence of the Engineer. The Contractor shall record the results on forms acceptable to the engineer. The second reading shall be equal to or greater than the first reading or the Contractor shall make the necessary repairs to the circuit to bring the second reading above the first reading. All repair costs including a complete replacement of the L-823 connectors, L-830 transformers and L-824 cable, if necessary, shall be borne by the Contractor. All test results shall be submitted in the Operation and Maintenance (O&M) Manual.

CONSTRUCTION METHODS

108-3.1 GENERAL. The Contractor shall install the specified cable at the approximate locations indicated on the plans. Unless otherwise shown on the plans, all cable required to cross under pavements expected to carry aircraft loads shall be installed in concrete encased duct banks. Wherever possible, cable shall be run without splices, from connection to connection.

Cable connections between lights will be permitted only at the light locations for connecting the underground cable to the primary leads of the individual isolation transformers. The Contractor shall be responsible for providing cable in continuous lengths for home runs or other long cable runs without connections, unless otherwise authorized in writing by the Engineer or shown on the plans.

In addition to connectors being installed at individual isolation transformers, L-823 cable connectors for maintenance and test points shall be installed at locations shown on the plans. Cable circuit identification markers shall be installed on both sides of the L-823 connectors installed or at least once in each access point where L-823 connectors are not installed.

* * * *

it shall be left sealed until connections are made. Where more than one cable is to be installed in a conduit, all cable shall be pulled in the conduit–at the same time. The pulling of a cable through duct banks or conduits may be accomplished by handwinch or power winch with the use of cable grips or pulling eyes. Maximum pulling-tensions shall-be governed by cable manufacturer's recommendations. A non-hardening lubricant recommended for the type of cable being installed shall be used where pulling lubricant is required.

[Contractor shall submit pulling tension values to the Engineer prior to any cable installation. If required by the Engineer, pulling tension values for cable pulls shall be monitored by a dynamometer in the presence of the Engineer. Cable pull tensions shall be recorded by the Contractor and reviewed by the Engineer. Cables exceeding the maximum allowable pulling tension values shall be removed and replaced by the Contractor at the Contractor's expense.]

The manufacturer's minimum bend radius or the NEC requirements whichever is more restrictive shall apply. Cable installation, handling and storage shall be per manufacturer's recommendations. During cold weather, particular attention shall be paid to the manufacturer's minimum installation temperature. Cable shall not be installed when the temperature is at or below the manufacturer's minimum installation temperature. At the Contractor's option, the Contractor may submit a plan, for review by the Engineer, for heated storage of the cable and maintenance of an acceptable cable temperature during installation when temperatures are below the manufacturer's minimum cable installation temperature.

Cable shall not be dragged across base can or manhole edges, pavement or earth. When cable must be coiled, lay cable out on a canvas tarp or utilize other appropriate means to prevent abrasion to the cable jacket.

* * * *

Dewatering necessary for cable installation, erosion and turbidity control, in accordance with Federal, State, and Local requirements is incidental to its respective pay items as part of Item L-108. The cost of all excavation regardless of type of material encountered, shall be included in the unit price bid for the L-108 Item.

The Contractor shall excavate all cable trenches to a width not less than 6 inches. Unless otherwise specified on the plans, all cables in the same location and running in the same general direction shall be installed in the same trench.

When rock is encountered, the rock shall be removed to a depth of at least 3 inches below the required cable depth and it shall be replaced with bedding material of earth or sand containing no mineral aggregate particles that would be retained on a 1/4-inch sieve. Flowable backfill material may alternatively be used. The Contractor shall ascertain the type of soil or rock to be excavated before bidding. All such rock removal shall be performed and paid for under Item P-152.

Duct bank or conduit markers temporarily removed for trench excavations shall be replaced as required.

It is the Contractor's responsibility to locate existing utilities within the work area prior to excavation. Where existing active cable(s) cross proposed installations, the Contractor shall insure that these cable(s) are adequately protected. Where crossings are unavoidable, no splices will be allowed in the existing cables, except as specified on the plans. Installation of new cable where such crossings must occur shall proceed as follows:

(1) Existing cables shall be located manually. Unearthed cables shall be inspected to assure absolutely no damage has occurred.

(2) Trenching, etc., in cable areas shall then proceed, with approval of the Engineer, with care taken to minimize possible damage or disruption of existing cable, including careful backfilling in area of cable.

In the event that any previously identified cable is damaged during the course of construction, the Contractor shall be responsible for the complete repair or replacement.

b. Backfilling. After the cable has been installed, the trench shall be backfilled. The first layer of backfill in the trench shall be 3 inches deep, loose measurement, and shall be either earth or sand containing no mineral aggregate particles that would be retained on a 1/4-inch sieve. This layer shall not be compacted. The second layer shall be 5 inches deep, loose measurement, and shall contain no particles that would be retained on a 1-inch sieve. The remaining 3rd and subsequent layers of backfill shall not exceed 8 inches of loose measurement and be excavated or imported material and shall not contain stone or aggregate larger than 4 inches maximum diameter.

The second and subsequent layers shall be thoroughly tamped and compacted to at least the density of the adjacent undisturbed soil, and to the satisfaction of the Engineer. If necessary to obtain the desired compaction, the backfill material shall be moistened or aerated as required.

Trenches shall not contain pools of water during backfilling operations. The trench shall be completely backfilled and tamped level with the adjacent surface, except that when turf is to be established over the trench, the backfilling shall be stopped at an appropriate depth consistent with the type of turfing operation to be accommodated. A proper allowance for settlement shall also be provided. Any excess excavated material shall be removed and disposed of in accordance with the plans and specifications.

Underground electrical warning (caution) tape shall be installed in the trench above all direct-buried cable. Contractor shall submit a sample of the proposed warning tape for acceptance by the Engineer. If not shown on the plans, the warning tape shall be located six inches above the direct-buried cable or the counterpoise wire if present. A 4-6 inch wide polyethylene film detectable tape, with a metalized foil core, shall be installed above all direct buried cable or counterpoise. The tape shall be of the color and have a continuous legend as indicated on the plans. The tape shall be installed 8 inches minimum below finished grade.

c. Restoration. Where soil and sod has been removed, it shall be replaced as soon as possible after the backfilling is completed. All areas disturbed by work shall be restored to its original condition. The restoration

shall include the **[sodding] [topsoiling] [fertilizing] [liming] [seeding] [sprigging] [mulching]** as shown on the plans. The Contractor shall be held responsible for maintaining all disturbed surfaces and replacements until final acceptance. When trenching is through paved areas, restoration shall be equal to existing conditions and compaction shall meet the requirements of Item P-152. Restoration shall be considered incidental to the pay item of which it is a component part.

* * * *

rubber tape and one layer of plastic tape, one-half lapped, extending at least 1-1/2 inches (37 mm) on each side of the joint.

d. Taped or Heat-Shrinked Splices. A taped splice shall be made in the following manner:

Bring the cables to their final position and cut so that the conductors will butt. Remove insulation and jacket allowing for bare conductor of proper length to fit compression sleeve connector with 1/4 inch (6 mm) of bare conductor on each side of the connector. Prior to splicing, the two ends of the cable insulation shall be penciled using a tool designed specifically for this purpose and for cable size and type. Do not use emery paper on splicing operation since it contains metallic particles. The copper conductors shall be thoroughly cleaned. Join the conductors by inserting them equidistant into the compression connection sleeve. Crimp conductors firmly in place with crimping tool that requires a complete crimp before tool can be removed. Test the crimped connection by pulling on the cable. Scrape the insulation to assure that the entire surface over which the tape will be applied (plus 3 inches (75 mm) on each end) is clean. After scraping wipe the entire area with a clean lint-free cloth. Do not use solvents.

Apply high-voltage rubber tape one-half lapped over bare conductor. This tape should be tensioned as recommended by the manufacturer. Voids in the connector area may be eliminated by highly elongating the tape, stretching it just short of its breaking point. Throughout the rest of the splice less tension should be used. Always attempt to exactly half-lap to produce a uniform buildup. Continue buildup to 1-1/2 times cable diameter over the body of the splice with ends tapered a distance of approximately 1 inch (25 mm) over the original jacket. Cover rubber tape with two layers of vinyl pressure-sensitive tape one-half lapped. Do not use glyptol or lacquer over vinyl tape as they react as solvents to the tape. No further cable covering or splice boxes are required.

Heat shrinkable tubing shall be installed following manufacturer's instructions. Direct flame heating shall not be permitted unless recommended by the manufacturer. Cable surfaces within the limits of the heat-shrink application shall be clean and free of contaminates prior to application.

108-3.6 BARE COUNTERPOISE WIRE INSTALLATION FOR LIGHTNING PROTECTION AND GROUNDING. If shown on the plans or included in the job specifications, bare counterpoise copper wire shall be installed for lightning protection of the underground cables. Counterpoise wire shall be installed in the same trench for the entire length of buried cable, conduits and duct banks that are installed to contain airfield cables. Where the cable or duct/conduit trench runs parallel to the edge of pavement, the counterpoise shall be installed in a separate trench located half the distance between the pavement edge and the cable or duct/conduit trench. In trenches not parallel to pavement edges, counterpoise wire shall be installed continuously a minimum of 4 inches above the cable, conduit or duct bank, or as shown on the plans if greater. Additionally, counterpoise wire shall be installed at least 8 inches below the top of subgrade in paved areas or 10 inches below finished grade in un-paved areas. This dimension may be less than 4 inches where conduit is to be embedded in existing pavement. Counterpoise wire shall not be installed in conduit.

The counterpoise wire shall be routed around to each light fixture base, mounting stake, or junction/access structures. The counterpoise wire shall also be exothermically welded to ground rods installed as shown on the plans but not more than 500feet (150 m) apart around the entire circuit.

The counterpoise system shall be continuous and terminate at the transformer vault or at the power source. It shall be securely attached to the vault or equipment external ground ring or other made electrode grounding system. The connections shall be made as shown on the plans and in the specifications.

If shown on the plans or in the specifications, a separate equipment (safety) ground system shall be provided in addition to the counterpoise wire using one of the following methods:

(1) A ground rod installed at and securely attached to each light fixture base, mounting stake if painted, and to all metal surfaces at junction/access structures.

(2) Install an insulated equipment ground conductor internal to the conduit system and securely attached it to each light fixture base and to all metal surfaces at junction/access structures. This equipment ground

conductor shall also be exothermically welded to ground rods installed not more than 500 feet (150 m) apart around the circuit.

a. Counterpoise Installation Above Multiple Conduits and Duct Banks. Counterpoise wires shall be installed above multiple conduits/duct banks for airfield lighting cables, with the intent being to provide a complete cone of protection over the airfield lighting cables. When multiple conduits and/or duct banks for airfield cable are installed in the same trench, the number and location of counterpoise wires above the conduits shall be adequate to provide a complete cone of protection measured 22 ½ degrees each side of vertical.

Where duct banks pass under pavement to be constructed in the project, the counterpoise shall be placed above the duct bank. Reference details on the construction plans.

b. Counterpoise Installation at Existing Duct Banks. When airfield lighting cables are indicated on the plans to be routed through existing duct banks, the new counterpoise wiring shall be terminated at ground rods at each end of the existing duct bank where the cables being protected enter and exit the duct bank. The new counterpoise conductor shall be bonded to the existing counterpoise system.

108-3.7 EXOTHERMIC BONDING. Bonding of counterpoise wire shall be by the exothermic welding process. Only personnel experienced in and regularly engaged in this type of work shall make these connections.

Contractor shall demonstrate to the satisfaction of the Engineer, the welding kits, materials and procedures to be used for welded connections prior to any installations in the field. The installations shall comply with the manufacturer's recommendations and the following:

All slag shall be removed from welds.

For welds at light fixture base cans, all galvanized coated surface areas and "melt" areas, both inside and outside of base cans, damaged by exothermic bond process shall be restored by coating with a liquid cold-galvanizing compound conforming to U.S. Navy galvanized repair coating meeting Mil. Spec. MIL-P-21035. Surfaces to be coated shall be prepared and compound applied in accordance with manufacturer's recommendations.

All buried copper and weld material at weld connections shall be thoroughly coated 6 mil of 3M "Scotchkote," or approved equivalent, or coated with coal tar bitumastic material to prevent surface exposure to corrosive soil or moisture."

108-3.8 TESTING. The Contractor shall furnish all necessary equipment and appliances for testing the airport electrical systems and underground cable circuits before and after installation. The Contractor shall perform all tests in the presence of the Engineer. The Contractor shall demonstrate the electrical characteristics to the satisfaction of the Engineer. All costs for testing are incidental to the respective item being tested. For phased projects, the tests must be completed by phase and results meeting the specifications below must be maintained by the Contractor throughout the entire project as well as during the ensuing warranty period.

Earth resistance testing methods shall be submitted to the Engineer for approval. Earth resistance testing results shall be recorded on an approved form and testing shall be performed in the presence of the Engineer. All such testing shall be at the sole expense of the Contractor.

Should the counterpoise or ground grid conductors be damaged or suspected of being damaged by construction activities the Contractor shall test the conductors for continuity with a low resistance ohmmeter. The conductors shall be isolated such that no parallel path exists and tested for continuity. The Engineer shall approve of the test method selected. All such testing shall be at the sole expense of the Contractor.

After installation, the Contractor shall test and demonstrate to the satisfaction of the Engineer the following:

a. That all affected lighting power and control circuits (existing and new) are continuous and free from short circuits.

b. That all affected circuits (existing and new) are free from unspecified grounds.

c. That the insulation resistance to ground of all new non-grounded series circuits or cable segments is not less than 50 megohms.

d. That the insulation resistance to ground of all non-grounded conductors of new multiple circuits or circuit segments is not less than 50 megohms.

e. That all affected circuits (existing and new) are properly connected in accordance with applicable wiring diagrams.

f. That all affected circuits (existing and new) are operable. Tests shall be conducted that include operating each control not less than 10 times and the continuous operation of each lighting and power circuit for not less than 1/2 hour.

g. That the impedance to ground of each ground rod does not exceed 25 ohms prior to establishing connections to other ground electrodes. The fall-of-potential ground impedance test shall be utilized, as described by ANSI/IEEE Standard 81, to verify this requirement.

Two copies of tabulated results of all cable tests performed shall be supplied by the Contractor to the Engineer. Where connecting new cable to existing cable, ground resistance tests shall be performed on the new cable prior to connection to the existing circuit.

There are no approved "repair" procedures for items that have failed testing other than complete replacement.

METHOD OF MEASUREMENT

108-4.1 Trenching shall be measured by the linear feet (meters) of trench, including the excavation, backfill, and restoration, completed, measured as excavated, and accepted as satisfactory.

When specified, separate measurement shall be made for trenches of various specified widths.

The cost of all excavation, backfill, dewatering and restoration regardless of the type of material encountered shall be included in the unit price bid for the work.

108-4.2 Cable or counterpoise wire installed in trench, duct bank or conduit shall be measured by the number of linear feet (meters) of cable or counterpoise wire installed in trenches, duct bank or conduit, including ground rods and grounding connectors, and trench marking tape ready for operation, and accepted as satisfactory. Separate measurement shall be made for each cable or counterpoise wire installed in trench, duct bank or conduit. The measurement for this item **[shall] [shall not]** include additional quantities required for slack.

* * * *

BASIS OF PAYMENT

108-5.1 Payment will be made at the contract unit price for trenching, cable and bare counterpoise wire installed in trench (direct-buried), or cable and equipment ground installed in duct bank or conduit, in place by the Contractor and accepted by the Engineer. This price shall be full compensation for furnishing all materials and for all preparation and installation of these materials, and for all labor, equipment, tools, and incidentals, including ground rods and ground connectors and trench marking tape, necessary to complete this item.

Payment will be made under:

Item L-108-5.1	Trenching for direct-buried cable —per linear foot (meter)
Item L-108-5.2	**[No. 8 AWG] [No. 6 AWG]** L-824C Cable, installed in trench, duct bank or conduit—per liner foot (meter)

* * * *

ANSI/IEEE Std 81	IEEE Guide for Measuring Earth Resistivity, Ground Impedance, and Earth Surface Potentials of a Ground System

END OF ITEM L-108

ITEM L-109 AIRPORT TRANSFORMER VAULT AND VAULT EQUIPMENT

DESCRIPTION

109-1.1 This item shall consist of constructing an airport transformer vault or a prefabricated metal housing these specifications in accordance with the design and dimensions shown in the plans. This work shall also include the installation of conduits in floor and foundation, painting and lighting of the vault or metal housing, and the furnishing of all incidentals necessary to produce a completed unit. Included as a separate part under this item or as a separate item where an existing vault is to be utilized shall be the furnishing of all vault equipment, wiring, electrical buses, cable, conduit, potheads, and grounding systems. This work shall also include the painting of equipment and conduit; the marking and labeling of equipment and the labeling or tagging of wires; the testing of the installation; and the furnishing of all incidentals necessary to place it in operating condition as a completed unit to the satisfaction of the Engineer.

EQUIPMENT AND MATERIALS

109-2.1 GENERAL.

a. Airport lighting equipment and materials covered by Federal Aviation Administration (FAA) specifications shall be certified and listed under Advisory Circular (AC) 150/5345-53, Airport Lighting Equipment Certification Program.

b. All other equipment and materials covered by other referenced specifications shall be subject to acceptance through manufacturer's certification of compliance with the applicable specification when requested by the Engineer.

c. Manufacturer's certifications shall not relieve the Contractor of the Contractor’s responsibility to provide materials in accordance with these specifications and acceptable to the Engineer. Materials supplied and/or installed that do not materially comply with these specifications shall be removed, when directed by the Engineer and replaced with materials, which do comply with these specifications, at the sole cost of the Contractor.

d. All materials and equipment used to construct this item shall be submitted to the Engineer for approval prior to ordering the equipment. Submittals consisting of marked catalog sheets or shop drawings shall be provided. Submittal data shall be presented in a clear, precise and thorough manner. Original catalog sheets are preferred. Photocopies are acceptable provided they are as good a quality as the original. Clearly and boldly mark each copy to identify pertinent products or models applicable to this project. Indicate all optional equipment and delete non-pertinent data. Submittals for components of electrical equipment and systems shall identify the equipment for which they apply on each submittal sheet. Markings shall be boldly and clearly made with arrows or circles (highlighting is not acceptable). Contractor is solely responsible for delays in project accruing directly or indirectly from late submissions or resubmissions of submittals.

e. The data submitted shall be sufficient, in the opinion of the Engineer, to determine compliance with the plans and specifications. [The Contractor's submittals shall be neatly bound in a properly sized 3-ring binder, tabbed by specification section.] The Engineer reserves the right to reject any and all equipment, materials or procedures, which, in the Engineer’s opinion, does not meet the system design and the standards and codes, specified herein.

f. All equipment and materials furnished and installed under this section shall be guaranteed against defects in materials and workmanship for a period of at least [twelve (12) months] from final acceptance by the Owner. The defective materials and/or equipment shall be repaired or replaced, at the Owner's discretion, with no additional cost to the Owner.

* * * *

section shall consist of hinged or removable cover for ready access to the interior. The cross section of the duct shall be not less than 4 x 4 inches (100 x 100 mm) except where otherwise shown in the plans.

109-2.15 GROUND RODS. Ground rods shall be copper or copper-clad of the length and diameter specified in the plans.

109-2.16 POTHEADS. Potheads shall be similar to G&W Type N, Shape C (or equivalent), unless otherwise specified. Potheads shall be furnished with plain insulator bushings and conduit couplings. Potheads shall have a rating not less than the circuit voltage.

109-2.17 PREFABRICATED METAL HOUSING. The prefabricated metal housing shall be a commercially available unit.

109-2.18 FAA-APPROVED EQUIPMENT. Certain items of airport lighting equipment installed in vaults are covered by individual FAA equipment specifications. The specifications are listed below:

AC 150/5345-3	Specification for L-821 Panels for Remote Control of Airport Lighting
AC 150/5345-5	Circuit Selector Switch
AC 150/5345-7	Specification for L-824 Underground Electrical Cable for Airport Lighting Circuits
AC 150/5345-10	Specification for Constant Current Regulators and Regulator Monitors
AC 150/5345-13	Specification for L-841 Auxiliary Relay Cabinet Assembly for Pilot Control of Airport Lighting Circuits.

109-2.19 OTHER ELECTRICAL EQUIPMENT. Constant-current regulators, distribution transformers, oil switches, cutouts, relays, terminal blocks, transfer relays, circuit breakers, and all other regularly used commercial items of electrical equipment not covered by FAA equipment specifications shall conform to the applicable rulings and standards of the Institute of Electrical and Electronic Engineers or the National Electrical Manufacturers Association. When specified, test reports from a testing laboratory indicating that the equipment meets the specifications shall be supplied. In all cases, equipment shall be new and a first-grade product. This equipment shall be supplied in the quantities required for the specific project and shall incorporate the electrical and mechanical characteristics specified in the proposal and plans.

109-2.20 WIRE. Wire in conduit rated up to 5,000 volts shall conform to AC 150/5345-7, Specification for L-824 Underground Electrical Cables for Airport Lighting Circuits, for rubber insulated neoprene-covered wire, or Fed. Spec. J-C-30, Type RHW, for rubber insulated fibrous-covered wire. For ratings up to 600 volts, thermoplastic wire conforming to Fed. Spec. J-C-30, Types TW, THW, and THWN, shall be used. The wires shall be of the type, size, number of conductors, and voltage shown in the plans or in the proposal.

a. Control Circuits. Unless otherwise indicated on the plans, wire shall be not less than No. 12 AWG and shall be insulated for 600 volts. If telephone control cable is specified, No. 19 AWG telephone cable conforming to ICEA S-85-625-1996 specifications shall be used.

b. Power Circuits.

(1) 600 volts maximum-Wire shall be No. 6 AWG or larger and insulated for at least 600 volts.

(2) 3,000 volts maximum-Wire shall be No. 6 AWG or larger and insulated for at least 3,000 volts.

(3) Over 3,000 volts-Wire shall be No. 6 AWG or larger and insulated for at least the circuit voltage.

CONSTRUCTION METHODS

CONSTRUCTION OF VAULT AND PREFABRICATED METAL HOUSING

109-3.1 GENERAL. The Contractor shall construct the transformer vault or prefabricated metal housing at the location indicated in the plans. Vault construction shall be reinforced concrete, concrete masonry, or brick wall as specified. The metal housing shall be prefabricated equipment enclosure to be supplied in the size specified. The mounting pad or floor details, installation methods, and equipment placement are shown in the plans.

The Contractor shall clear, grade, and seed the area around the vault or metal housing for a minimum distance of 10 feet (3 m) on all sides. The slope shall be not less than ½-inch per foot (40 mm per m) away from the vault or metal housing in all directions.

The vault shall provide adequate protection against weather elements, including rain, wind-driven dust, snow, ice and excessive heat. The vault shall have sufficient filtered ventilation, to assure that the interior room temperatures and conditions do not exceed the recommended limits of the electrical equipment to be installed in the vault. Contractor is responsible for contacting the manufacturer of the equipment to be installed to obtain environmental limitations of the equipment to be installed.

* * * *

b. Brick and Concrete Construction. When this type of construction is specified, the foundation shall be concrete conforming to the details shown in the plans. The outer edge of the foundation at the floor level shall be beveled 1-½ inches (37 mm) at 45 degrees. Brick walls shall be 8 inches (200 cm) thick, laid in running bond with every sixth course a header course. Brick shall be laid in cement mortar (1 part masonry cement and 3 parts sand) with full mortar bed and shoved joints. All joints shall be completely filled with mortar, and facing brick shall be back-parged with mortar as work progresses. All joints shall be 3/8 inch (9 mm) thick, exterior joints tooled concave, and interior joints struck flush. Both interior and exterior brick surfaces shall be cleaned and nail holes, cracks and other defects filled with mortar. When specified, a nonfading mineral pigment mortar coloring shall be added to the mortar. Steel reinforcing bars, 3/8-inch (9 mm) in diameter and 12 inches (300 mm) long, shall be set vertically in the center of the brick wall on not more than 2-foot (60 cm) centers to project 2-½(60 mm) inches into the concrete roof slab. Lintels for supporting the brickwork over doors, windows, and louvers shall consist of two 4- x 3- x 3/8-inch (100 x 75 x 9 mm) steel angles. Lintels shall be painted with one coat of corrosion-inhibiting primer before installation, and all exposed parts shall be painted similar to doors and window sash after installation.

Window sills may be concrete poured in place or precast concrete as indicated in the plans. All exposed surfaces shall have a rubbed finish as specified under reinforced concrete construction. After completion, all interior and exterior faces of walls shall be scrubbed with a solution of muriatic acid and water in the proportions of not less than 1 part acid to 10 parts of water. All traces of efflorescence, loose mortar, and mortar stain shall be removed, and the walls washed down with clear water.

c. Concrete Masonry Construction. When this type of construction is specified, the foundation shall be concrete conforming to the details shown in the plans. The concrete masonry units shall be standard sizes and shapes and shall conform to ASTM C 90 and shall include the closures, jambs, and other shapes required by the construction as shown in the plans. Standard construction practice shall be followed for this type of work including mortar, joints, reinforcing steel for extensions into roof slab, etc. Plaster for interior walls, if specified, shall be portland cement plaster.

109-3.3 ROOF. The roof shall be reinforced concrete as shown in the plans. Reinforcing steel shall be placed as shown in the drawing and secured in position to prevent displacement during the pouring of the concrete. The concrete shall be poured monolithically and shall be free of honeycombs and voids. The surface shall have a steel-troweled finish and shall be sloped as shown in the drawing. The underside of the roof slab shall be finished in the same manner as specified for walls.

One brush or mop coat of hot asphalt roof coating shall be applied to the top surface of the roof slab. The asphalt material shall be heated to within the range specified by the manufacturer and immediately applied to the roof. The finished coat shall be continuous over the roof surface and free from holidays and blisters. Smears and dribbles of asphalt on the roof edges and building walls shall be removed.

109-3.4 FLOOR. The floor shall be reinforced concrete as shown in the drawings. When present, all sod, roots, refuse, and other perishable material shall be removed from the area under the floor to a depth of 8 inches (200 mm), unless a greater depth is specified in the invitation for bids. This area shall be backfilled with materials consisting of sand, cinders, gravel, or stone. Fill shall be placed in layers not to exceed 4 inches (100 mm) and shall be thoroughly compacted by tamping or rolling. A layer of building paper shall be placed over the fill prior to placing concrete. The floor surfaces shall have a steel-troweled finish. The floor shall be level unless a drain is specified, in which case the floor shall be pitched ¼-inch (6 mm) per foot downward toward the drain. A ¼-inch (6 mm) asphalt felt expansion joint shall be placed between floor and foundation walls. The floor shall be poured monolithically and shall be free of honeycombs and voids.

109-3.5 FLOOR DRAIN. If shown in the plans, a floor drain and dry well shall be installed in the center of the floor of the equipment room. The dry well shall be excavated 4 x 4 feet (120 x 120 cm) square and to a depth of 4 feet (120 cm) below the finished floor elevation and shall be backfilled to the elevation of the underside of the floor with gravel - which shall all pass a 2-inch (50 mm) mesh sieve and shall all be retained on a ¼-inch (6 mm) mesh sieve. The gravel backfill shall be placed in 6-inch (150 mm) maximum layers, and the entire surface of each layer shall be tamped either with a mechanical tamper or with a hand tamper weighing not less than 25 pounds (11 kg) and having a face area of not more than 36 square inches (234 square cm) nor less than 16 square inches

(104 square cm). The drain inlet shall be set flush in the concrete floor. The drain shall have a clear opening of not less than 8 inches (200 mm) in diameter.

109-3.6 CONDUITS IN FLOOR AND FOUNDATION. Conduits shall be installed in the floor and through the foundation walls in accordance with the details shown in the plans. All underground conduit shall be painted with a bituminous compound. Conduit shall be installed with a coupling or metal conduit adapter flush with the top of the floor. All incoming conduit shall be closed with a pipe plug to prevent the entrance of foreign material during construction. Space conduit entrances shall be left closed.

109-3.7 DOORS. Doors shall be metal-clad fireproof class a doors conforming to requirements of the National Electric Code and local electrical codes.

109-3.8 PAINTING. The floor, ceiling, and inside walls of concrete construction shall first be given a hardening treatment, after which the Contractor shall apply two coats of paint as specified below, except that interior face brick walls need not be painted. The hardening treatment shall consist of applying two coats of either a commercial floor hardener or a solution made by dissolving 2 pounds (0.9 kg) of magnesium fluosilicate or zinc sulphate crystals in 1 gallon (liter) of water. Each coat shall be allowed to dry at least 48 hours before the next application. After the second treating coat has dried, the surfaces shall be brushed clean of all crystals and thoroughly washed with clear water. Paint for walls and ceiling shall be a light gray color approved by the Engineer. The floor paint shall be a medium gray color approved by the Engineer. Before painting, the surfaces shall be dry and clean. The first coat shall be thinned by adding 2/3-quart (0.166 liters) of spar varnish and 1/3-quart (0.083 liters) of turpentine to each gallon (liter) of paint. The second coat shall be applied without thinning. All doors, lintels, and windows shall be cleaned to remove any rust or foreign material and shall be given one body and one finish coat of white paint. Bare metal surfaces shall be given a prime coat of corrosion-inhibiting primer prior to the body and finish coats.

109-3.9 LIGHTS AND SWITCHES. The Contractor shall furnish and install a minimum of two duplex convenience outlets in the vault room. Where a control room is specified, at least two duplex outlets shall be installed.

INSTALLATION OF EQUIPMENT IN VAULT OR PREFABRICATED METAL HOUSING

109-3.10 GENERAL. The Contractor shall furnish, install, and connect all equipment, equipment accessories, conduit, cables, wires, buses, grounds, and support necessary to insure a complete and operable electrical distribution center for the airport lighting system as specified herein and shown in the plans. When specified, an emergency power supply and transfer switch shall be provided and installed.

The equipment installation and mounting shall comply with the requirements of the National Electrical Code and local code agency having jurisdiction.

109-3.11 POWER SUPPLY EQUIPMENT. Transformers, regulators, booster transformers, and other power supply equipment items shall be furnished and installed at the location shown in the plans or as directed by the Engineer. The power supply equipment shall be set on steel "H" sections, "I" beams, channels, or concrete blocks to provide a minimum space of 1-½ inches (37 mm) between the equipment and the floor. The equipment shall be placed so as not to obstruct the oil-sampling plugs of the oil-filled units; and name-plates shall, so far as possible, not be obscured.

If specified in the plans and specifications, equipment for an alternate power source or an emergency power generator shall be furnished and installed. The alternate power supply installation shall include all equipment, accessories, an automatic changeover switch, and all necessary wiring and connections. The emergency power generator set shall be the size and type specified.

109-3.12 SWITCHGEAR AND PANELS. Oil switches, fused cutouts, relays, transfer switches, panels, panel boards, and other similar items shall be furnished and installed at the location shown in the plans or as directed by

the Engineer. Wall or ceiling mounted items shall be attached to the wall or ceiling with galvanized bolts of not less than 3/8-inch (9 mm) diameter engaging metal expansion shields or anchors in masonry or concrete vaults.

109-3.13 DUCT AND CONDUIT. The Contractor shall furnish and install square-type exposed metallic ducts with hinged covers for the control circuits in the vault. These shall be mounted along the walls behind all floor-mounted equipment and immediately below all wall-mounted equipment. The hinged covers shall be placed to open from the front side with the hinges at the front bottom.

Wall brackets for square ducts shall be installed at all joints 2 feet (60 cm) or more apart with intermediate brackets as specified. Conduit shall be used between square ducts and equipment or between different items of equipment when the equipment is designed for conduit connection. When the equipment is not designed for conduit connection, conductors shall enter the square-type control duct through insulating bushings in the duct or on the conduit risers.

109-3.14 CABLE ENTRANCE AND HIGH-VOLTAGE BUS SYSTEM. Incoming underground cable from field circuits and supply circuits will be installed outside the walls of the transformer vault as a separate item under Item L-108. The Contractor installing the vault equipment shall bring the cables from the trench or duct through the entrance conduits into the vault and make the necessary electrical connections. For the incoming and outgoing high voltage load circuits, the Contractor shall furnish and install rigid metallic vi conduit risers, surmounted by potheads, from floor level to the level as shown in the plans.

The incoming high-voltage power supply service to the vault shall enter below the floor of the vault and shall rise from the floor level in a rigid metallic conduit riser, surmounted by a pothead, as described above. Using insulated high-voltage cable, the incoming power service shall be connected from the pothead to the oil-fused cutouts or to the specified disconnecting switch or equipment. From the oil-fused cutouts or disconnecting device, the insulated service conductors shall be connected to the overhead voltage bus system of the vault. The high-voltage bus system shall utilize the materials specified and shall be mounted and installed in accordance with the requirements of the National Electrical Code or the local code agency having jurisdiction.

109-3.15 WIRING AND CONNECTIONS. The Contractor shall make all necessary electrical connections in the vault in accordance with the wiring diagrams furnished and as directed by the Engineer. In wiring to the terminal blocks, the Contractor shall leave sufficient extra length on each control lead to make future changes in connections at the terminal block. This shall be accomplished by running each control lead the longest way around the box to the proper terminal. Leads shall be neatly laced in place.

109-3.16 MARKING AND LABELING. All equipment, control wires, terminal blocks, etc., shall be tagged, marked, or labeled as specified below:

a. Wire Identification. The Contractor shall furnish and install self-sticking wire labels or identifying tags on all control wires at the point where they connect to the control equipment or to the terminal blocks. Wire labels, if used, shall be of the self-sticking preprinted type and of the manufacturer's recommended size for the wire involved. Identification -markings designated in the plans shall be followed. Tags, if used, shall be of fiber not less than ¾-inch (13 mm) in diameter and not less than 1/32-inch (1 mm) thick. Identification markings designated in the plans shall be stamped on tags by means of smalltool dies. Each tag shall be securely tied to the proper wire by a nonmetallic cord.

b. Labels. The Contractor shall stencil identifying labels on the cases of regulators, breakers, and distribution and control relay cases with white oil paint as designated by the Engineer. The letters and numerals shall be not less than 1 inch (25 mm) in height and shall be of proportionate width. The Contractor shall also mark the correct circuit designations in accordance with the wiring diagram on the terminal marking strips, which are a part of each terminal block.

METHOD OF MEASUREMENT

109-4.1 The quantity of vaults to be paid for under this item shall consist of the number of vaults constructed in place and accepted as a complete unit.

109-4.2 The quantity of prefabricated metal housings to be paid for under this item shall consist of the number of housings constructed in place and accepted as a complete unit.

109-4.3 The quantity of vault or prefabricated metal housing equipment to be paid for under this item shall consist of all equipment installed, connected, and accepted as a complete unit ready for operation.

BASIS OF PAYMENT

109-5.1 Payment will be made at the contract unit price for each completed and accepted vault or prefabricated metal housing equipment installation. This price shall be full compensation for furnishing all materials and for all preparation, assembly, and installation of these materials, and for all labor, equipment, tools, and incidentals necessary to complete the item.

Payment will be made under:

Item L-109-5.1	Construction of Airport Transformer Vault in Place-per unit
Item L-109-5.2	Installation of Airport Transformer Vault Equipment in Place-per unit
Item L-109-5.3	Construction of Prefabricated Metal Housing and Foundation in Place-per unit
Item L-109-5.4	Installation of Prefabricated Metal Housing Equipment in Place-per unit

MATERIAL REQUIREMENTS

AC 150/5345-3	Specification for L-821 Panels for Remote Control of Airport Lighting
AC 150/5345-5	Circuit Selector Switch
AC 150/5345-7	Specification for L-824 Underground Electrical Cable for Airport Lighting Circuits
AC 150/5345-10	Specification for Constant Current Regulators and Regulator Monitors
AC 150/5345-13A	Specification for L-841 Auxiliary Relay Cabinet Assembly for Pilot Control of Airport Lighting Circuits
ANSI/ICEA S-85-625-1996	Aircore, Polyethylene Insulated, Copper Conductor, Telecommunications Cable
ASTM A 615	Specification for Deformed and Plain Billet Steel Bars for Concrete Reinforcement
ASTM C 62	Specification for Building Brick (Solid Masonry Units Made from Clay or Shale)
ASTM C 90	Concrete Masonry Units, Loadbearing
ASTM D 2823	Asphalt Roof-Coating
FED SPEC J-C-30	Cable and Wire, Electrical (Power, Fixed Installation) (cancelled; replaced by AA-59544 Cable and Wire, Electrical (Power, Fixed Installation))

FED SPEC TT-E-487 Enamel, Floor and Deck

Master Painter's Institute

END OF ITEM L-109

Intentionally Left Blank

ITEM L-110 AIRPORT UNDERGROUND ELECTRICAL DUCT BANKS AND CONDUITS

DESCRIPTION

110-1.1 This item shall consist of underground electrical conduits and duct banks (single or multiple conduits encased in concrete) installed in accordance with this specification at the locations and in accordance with the dimensions, designs, and details shown on the plans. This item shall include furnishing and installing of all underground electrical duct banks and individual and multiple underground conduits. It shall also include all turfing trenching, backfilling, removal, and restoration of any paved or turfed areas; concrete encasement, mandreling, pulling lines, duct markers, plugging of conduits, and the testing of the installation as a completed system ready for installation of cables in accordance with the plans and specifications. This item shall also include furnishing and installing conduits and all incidentals for providing positive drainage of the system. Verification of existing ducts is incidental to the pay items provided in this specification.

EQUIPMENT AND MATERIALS

110-2.1 GENERAL.

a. All equipment and materials covered by referenced specifications shall be subject to acceptance through manufacturer's certification of compliance with the applicable specification when so requested by the Engineer.

b. Manufacturer's certifications shall not relieve the Contractor of the Contractor’s responsibility to provide materials in accordance with these specifications and acceptable to the Engineer. Materials supplied and/or installed that do not materially comply with these specifications shall be removed, when directed by the Engineer and replaced with materials, which do comply with these specifications, at the sole cost of the Contractor.

c. All materials and equipment used to construct this item shall be submitted to the Engineer for approval prior to ordering the equipment. Submittals consisting of marked catalog sheets or shop drawings shall be provided. Submittal data shall be presented in a clear, precise and thorough manner. Original catalog sheets are preferred. Photocopies are acceptable provided they are as good a quality as the original. Clearly and boldly mark each copy to identify pertinent products or models applicable to this project. Indicate all optional equipment and delete non-pertinent data. Submittals for components of electrical equipment and systems shall identify the equipment for which they apply on each submittal sheet. Markings shall be boldly and clearly made with arrows or circles (highlighting is not acceptable). Contractor is solely responsible for delays in project accruing directly or indirectly from late submissions or resubmissions of submittals.

d. The data submitted shall be sufficient, in the opinion of the Engineer, to determine compliance with the plans and specifications. [The Contractor's submittals shall be neatly bound in a properly sized 3-ring binder, tabbed by specification section.] The Engineer reserves the right to reject any and all equipment, materials or procedures, which, in the Engineer’s opinion, does not meet the system design and the standards and codes, specified herein.

e. All equipment and materials furnished and installed under this section shall be guaranteed against defects in materials and workmanship for a period of at least [twelve (12) months] from final acceptance by the Owner. The defective materials and/or equipment shall be repaired or replaced, at the Owner's discretion, with no additional cost to the Owner.

* * * *

The length of time for guarantee of materials and workmanship should be as stated in the contract between the owner and contractor and the contract special provisions.

* * * *

* * * *

Unless otherwise shown on the plans, concrete encased duct banks shall be utilized when crossing under pavements expected to carry aircraft loads.

Where turf is well established and the sod can be removed, it shall be carefully stripped and properly stored.

Trenches for conduits and duct banks may be excavated manually or with mechanical trenching equipment unless in pavement, in which case they shall be excavated with mechanical trenching equipment. Walls of trenches shall be essentially vertical so that a minimum of shoulder surface is disturbed. Blades of graders shall not be used to excavate the trench.

When rock is encountered, the rock shall be removed to a depth of at least 3 inches below the required conduit or duct bank depth and it shall be replaced with bedding material of earth or sand containing no mineral aggregate particles that would be retained on a 1/4-inch sieve. Flowable backfill may alternatively be used The Contractor shall ascertain the type of soil or rock to be excavated before bidding. All such rock removal shall be performed and paid for under Item P-152.

Underground electrical warning (caution) tape shall be installed in the trench above all underground duct banks and conduits in unpaved areas. Contractor shall submit a sample of the proposed warning tape for approval by the Engineer. If not shown on the plans, the warning tape shall be located six inches above the duct/conduit or the counterpoise wire if present.

Joints in plastic conduit shall be prepared in accordance with the manufacturer's recommendations for the particular type of conduit. Plastic conduit shall be prepared by application of a plastic cleaner and brushing a plastic solvent on the outside of the conduit ends and on the inside of the couplings. The conduit fitting shall then be slipped together with a quick one-quarter turn twist to set the joint tightly. Where more than one conduit is placed in a single trench, or in duct banks, joints in the conduit shall be staggered a minimum of 2 feet.

Changes in direction of runs exceeding 10 degrees, either vertical or horizontal, shall be accomplished using manufactured sweep bends.

Whether or not specifically indicated on the drawings, where the soil encountered at established duct bank grade is an unsuitable material, as determined by the Engineer, the unsuitable material shall be removed in accordance with Item P-152 and replaced with suitable material. Alternatively, additional duct bank supports that are adequate and stable shall be installed, as approved by the Engineer.

All excavation shall be unclassified and shall be considered incidental to the respective L-110 pay item of which it is a component part. Dewatering necessary for duct installation, erosion and turbidity control, in accordance with Federal, State, and Local requirements is incidental to its respective pay item as a part of Item L-110. The cost of all excavation regardless of type of material encountered, shall be included in the unit price bid for the L-110 Item.

Unless otherwise specified, excavated materials that are deemed by the Engineer to be unsuitable for use in backfill or embankments shall be removed and disposed of off site.

Any excess excavation shall be filled with suitable material approved by the Engineer and compacted in accordance with item P-152.

It is the Contractor's responsibility to locate existing utilities within the work area prior to excavation. Where existing active cables) cross proposed installations, the Contractor shall insure that these cable(s) are adequately protected. Where crossings are unavoidable, no splices will be allowed in the existing cables, except as specified on the plans. Installation of new cable where such crossings must occur shall proceed as follows:

(1) Existing cables shall be located manually. Unearthed cables shall be inspected to assure absolutely no damage has occurred

(2) Trenching, etc., in cable areas shall then proceed with approval of the Engineer, with care taken to minimize possible damage or disruption of existing cable, including careful backfilling in area of cable.

In the event that any previously identified cable is damaged during the course of construction, the Contractor shall be responsible for the complete repair.

110-3.2 DUCT BANKS. Unless otherwise shown in the plans, duct banks shall be installed so that the top of the concrete envelope is not less than 18 inches (45 cm) below the bottom of the base or stabilized base course layers where installed under runways, taxiways, aprons, or other paved areas, and not less than 18 inches (45 cm) below finished grade where installed in unpaved areas.

Unless otherwise shown on the plans, duct banks under paved areas shall extend at least 3 feet (90 cm) beyond the edges of the pavement or 3 feet (90 cm) beyond any underdrains that may be installed alongside the paved area. Trenches for duct banks shall be opened the complete length before concrete is placed so that if any obstructions are encountered, proper provisions can be made to avoid them. Unless otherwise shown on the plans, all duct banks shall be placed on a layer of concrete not less than 3 inches (75 mm) thick prior to its initial set. Where two or more conduits in the duct bank are intended to carry conductors of equivalent voltage insulation rating, the Contractor shall space the conduits not less than 1-1/2 inches (37 mm) apart (measured from outside wall to outside wall). Where two or more conduits in the duct bank are intended to carry conductors of differing voltage insulation rating, the Contractor shall space the conduits not less than 3 inches apart (measured from outside wall to outside wall). All such multiple conduits shall be placed using conduit spacers applicable to the type of conduit. As the conduit laying progresses, concrete shall be placed around and on top of the conduits not less than 3 inches (75 mm) thick unless otherwise shown on the plans. End bells or couplings shall be installed flush with the concrete encasement at access points.

Conduits forming the duct bank shall be installed using conduit spacers. No. 4 reinforcing bars shall be driven vertically into the soil a minimum of 6 inches to anchor the assembly into the earth prior to placing the concrete encasement. For this purpose, the spacers shall be fastened down with locking collars attached to the vertical bars. Spacers shall be installed at 5 -foot intervals. Spacers shall be in the proper sizes and configurations to fit the conduits. Locking collars and spacers shall be submitted to the Engineer for review prior to use.

When specified, the Contractor shall reinforce the bottom side and top of encasements with steel reinforcing mesh or fabric or other approved metal reinforcement. When directed, the Contractor shall supply additional supports where the ground is soft and boggy, where ducts cross under roadways, or where shown on the plans. Under such conditions, the complete duct structure shall be supported on reinforced concrete footings, piers, or piles located at approximately 5 foot (150 cm) intervals.

All pavement surfaces that are to have ducts installed therein shall be neatly saw cut to form a vertical face. All excavation shall be included in the contract with price for the duct.

Install a plastic, detectable, color as noted, 4-6 inch (75-150mm) wide tape 8 inches (200mm) minimum below grade above all underground conduit or duct lines not installed under pavement.

When existing cables are to be placed in split duct, encased in concrete, the cable shall be carefully located and exposed by hand tools. Prior to being placed in duct, the Engineer shall be notified so that he may inspect the cable and determine that it is in good condition. Where required, split duct shall be installed as shown on the drawings or as required by the Engineer.

110-3.3 CONDUITS WITHOUT CONCRETE ENCASEMENT. Trenches for single-conduit lines shall be not less than 6 inches (150 mm) nor more than 12 inches (300 mm) wide, and the trench for 2 or more conduits installed

at the same level shall be proportionately wider. Trench bottoms for conduits without concrete encasement shall be made to conform accurately to grade so as to provide uniform support for the conduit along its entire length.

Unless otherwise shown on the plans, a layer of fine earth material, at least 4 inches (100 mm) thick (loose measurement) shall be placed in the bottom of the trench as bedding for the conduit. The bedding material shall consist of soft dirt, sand or other fine fill, and it shall contain no particles that would be retained on a 1/4-inch (6 mm) sieve. The bedding material shall be tamped until firm. Flowable backfill may alternatively used.

Unless otherwise shown on plans, conduits shall be installed so that the tops of all conduits are at least 18 inches (45 cm) below the finished grade.

When two or more individual conduits intended to carry conductors of equivalent voltage insulation rating are installed in the same trench without concrete encasement, they shall be spaced not less than 2 inches (50 mm) apart (measured from outside wall to outside wall) in a horizontal direction and not less than 6 inches (150 mm) apart in a vertical direction. Where two or more individual conduits intended to carry conductors of differing voltage insulation rating are installed in the same trench without concrete encasement, they shall spaced not less than 3 inches (75 mm) apart (measured from outside wall to outside wall) in a horizontal direction and lot less than 6 inches (150 mm) apart in a vertical direction.

Trenches shall be opened the complete length between normal termination points before conduit is installed so that if any unforeseen obstructions are encountered, proper provisions can be made to avoid them.

Conduits shall be installed using conduit spacers. No. 4 reinforcing bars shall be driven vertically into the soil a minimum of 6 inches to anchor the assembly into the earth while backfilling. For this purpose, the spacers shall be fastened down with locking collars attached to the vertical bars. Spacers shall be installed at 5 -foot intervals. Spacers shall be in the proper sizes and configurations to fit the conduits. Locking collars and spacers shall be submitted to the Engineer for review prior to use.

110-3.4 MARKERS. The location of each end and of each change of direction of conduits and duct banks shall be marked by a concrete slab marker 2 feet (60 cm) square and 4-6 inches (100-150 mm) thick extending approximately 1 inch (25 mm) above the surface. The markers shall also be located directly above the ends of all conduits or duct banks, except where they terminate in a junction/access structure or building.

The Contractor shall impress the word “DUCT” or “CONDUIT” on each marker slab. The Contractor shall also impress on the slab the number and size of conduits beneath the marker along with all other necessary information as determined by the Engineer. The letters shall be 4 inches (100 mm) high and 3 inches (75 mm) wide with width of stroke 1/2-inch (12 mm) and 1/4-inch (6 mm) deep or as large as the available space permits. Furnishing and installation of duct markers is incidental to the respective duct pay item.

110-3.5 BACKFILLING FOR CONDUITS. For conduits, 8 inches (200 cm) of sand, soft earth, or other fine fill (loose measurement) shall be placed around the conduits ducts and carefully tamped around and over them with hand tampers. The remaining trench shall then be backfilled and compacted in accordance with Item P-152 "Excavation and Embankment" except that material used for back fill shall be select material not larger than 4 inches in diameter.

Flowable backfill may alternatively be used

Trenches shall not contain pools of water during back, filling operations.

The trench shall be completely backfilled and tamped level with the adjacent surface: except that, where sod is to be placed over the trench, the backfilling shall be stopped at a depth equal to the thickness of the sod to be used, with proper allowance for settlement.

Any excess excavated material shall be removed and disposed of in accordance with instructions issued by the Engineer.

110-3.6 BACKFILLING FOR DUCT BANKS. After the concrete has cured, the remaining trench shall be backfilled and compacted in accordance with Item P-152 "Excavation and Embankment" except that the material used for backfill shall be select material not larger than 4 inches in diameter. In addition to the requirements of P-152, where duct banks are installed under pavement, one moisture/density test per lift shall be made for each 250 linear feet of duct bank or one work period's construction, whichever is less.

Flowable backfill may alternatively be used

Trenches shall not contain pools of water during backfilling operations.

The trench shall be completely backfilled and tamped level with the adjacent surface: except that, where sod is to be placed over the trench, the backfilling shall be stopped at a depth equal to the thickness of the sod to be used, with proper allowance for settlement.

Any excess excavated material shall be removed and disposed of in accordance with instructions issued by the Engineer.

110-3.7 RESTORATION. Where sod has been removed, it shall be replaced as soon as possible after the backfilling is completed. All areas disturbed by the work shall be restored to its original condition. The restoration shall include **[sodding] [topsoiling] [fertilizing] [liming] [seeding] [sprigging] [mulching]** shown on the plans. The Contractor shall be held responsible for maintaining all disturbed surfaces and replacements until final acceptance. All restoration shall be considered incidental to the respective L-110 pay item.

* * * *

MATERIAL REQUIREMENTS

Fed.Spec.W-C-1094	Conduit and Conduit Fittings; Plastic, Rigid (cancelled; replaced by UL 514 Boxes, Nonmetallic Outlet, Flush Device Boxes, & Covers, and UL 651 Standard for Conduit & Hope Conduit, Type EB & A Rigid PVC)
Underwriters Laboratories Standard 6	Rigid Metal Conduit
Underwriters Laboratories Standard 514B	Fittings for Cable and Conduit
Underwriters Laboratories Standard 1242	Intermediate Metal Conduit
Underwriters Laboratories Standard 651	Schedule 40 and 80 Rigid PVC Conduit (for Direct Burial)
Underwriters Laboratories Standard 651A	Type EB and A Rigid PVC Conduit and HDPE Conduit (for concrete encasement)

END OF ITEM L-110

ITEM L-115 ELECTRICAL MANHOLES AND JUNCTION STRUCTURES

DESCRIPTION

115-1.1 This item shall consist of electrical manholes and junction structures (handholes, pullboxes, junction cans, etc.) installed in accordance with this specification, at the indicated locations and conforming to the lines, grades and dimensions shown on the plans or as required by the Engineer. This item shall include the installation of each electrical manhole and/or junction structures with all associated excavation, backfilling, sheeting and bracing, concrete, reinforcing steel, ladders, appurtenances, testing, dewatering and restoration of surfaces to the satisfaction of the Engineer.

EQUIPMENT AND MATERIALS

115-2.1 GENERAL.

a. All equipment and materials covered by referenced specifications shall be subject to acceptance through manufacturer's certification of compliance with the applicable specification when so requested by the Engineer.

b. Manufacturer's certifications shall not relieve the Contractor of the Contractor's responsibility to provide materials in accordance with these specifications and acceptable to the Engineer. Materials supplied and/or installed that do not materially comply with these specifications shall be removed, when directed by the Engineer and replaced with materials, which do comply with these specifications, at the sole cost of the Contractor.

c. All materials and equipment used to construct this item shall be submitted to the Engineer for approval prior to ordering the equipment. Submittals consisting of marked catalog sheets or shop drawings shall be provided. Submittal data shall be presented in a clear, precise and thorough manner. Original catalog sheets are preferred. Photocopies are acceptable provided they are as good a quality as the original. Clearly and boldly mark each copy to identify pertinent products or models applicable to this project. Indicate all optional equipment and delete non-pertinent data. Submittals for components of electrical equipment and systems shall identify the equipment for which they apply on each submittal sheet. Markings shall be boldly and clearly made with arrows or circles (highlighting is not acceptable). Contractor is solely responsible for delays in project accruing directly or indirectly from late submissions or resubmissions of submittals.

d. The data submitted shall be sufficient, in the opinion of the Engineer, to determine compliance with the plans and specifications. [The Contractor's submittals shall be neatly bound in a properly sized 3-ring binder, tabbed by specification section.] The Engineer reserves the right to reject any and all equipment, materials or procedures, which, in the Engineer's opinion, does not meet the system design and the standards and codes, specified herein.

e. All equipment and materials furnished and installed under this section shall be guaranteed against defects in materials and workmanship for a period of at least [twelve (12) months] from final acceptance by the Owner. The defective materials and/or equipment shall be repaired or replaced, at the Owner's discretion, with no additional cost to the Owner.

* * * *

Provide precast concrete structures where shown on the plans. Precast concrete structures shall be an approved standard design of the manufacturer. Precast units shall have mortar or bitumastic sealer placed between all joints to make them watertight. The structure shall be designed to withstand [ZZZ lb aircraft] loads, unless otherwise shown on the plans. Openings or knockouts shall be provided in the structure as detailed on the plans.

* * * *

* * * *

* * * *

115-3.4 PLACEMENT AND TREATMENT OF CASTINGS, FRAMES AND FITTINGS. All castings, frames and fittings shall be placed in the positions indicated on the Plans or as directed by the Engineer and shall be set true to line and to correct elevation. If frames or fittings are to be set in concrete or cement mortar, all anchors or bolts shall be in place and position before the concrete or mortar is placed. The unit shall not be disturbed until the mortar or concrete has set.

Field connections shall be made with bolts, unless indicated otherwise. Welding will not be permitted unless shown otherwise on the approved shop drawings and written permission is granted by the casting manufacturer. Erection equipment shall be suitable and safe for the workman. Errors in shop fabrication or deformation resulting from handling and transportation that prevent the proper assembly and fitting of parts shall be reported immediately to the Engineer and approval of the method of correction shall be obtained. Approved corrections shall be made at Contractor's expense.

Anchor bolts and anchors shall be properly located and built into connection work. Bolts and anchors shall be preset by the use of templates or such other methods as may be required to locate the anchors and anchor bolts accurately.

Pulling-in irons shall be located opposite all conduit entrances into structures to provide a strong, convenient attachment for pulling-in blocks when installing cables. Pulling-in irons shall be set directly into the concrete walls of the structure.

115-3.5 INSTALLATION OF LADDERS. Ladders shall be installed such that they may be removed if necessary. Mounting brackets shall be supplied top and bottom and shall be cast in place during fabrication of the structure or drilled and grouted in place after erection of the structure.

115-3.6 REMOVAL OF SHEETING AND BRACING. In general, all sheeting and bracing used to support the sides of trenches or other open excavations shall be withdrawn as the trenches or other open excavations are being refilled. That portion of the sheeting extending below the top of a structure shall be withdrawn, unless otherwise directed, before more than six (6) inches of material is placed above the top of the structure and before any bracing is removed. Voids left by the sheeting shall be carefully refilled with selected material and rammed tight with tools especially adapted for the purpose or otherwise as may be approved.

The Engineer may order the Contractor to delay the removal of sheeting and bracing if, in his judgment, the installed work has not attained the necessary strength to permit placing of backfill.

115-3.7 BACKFILLING. After a structure has been completed, the area around it shall be backfilled in horizontal layers not to exceed 6 inches in thickness measured after compaction to the density requirements in Item P-152. Each layer shall be deposited all around the structure to approximately the same elevation. The top of the fill shall meet the elevation shown on the plans or as directed by the Engineer.

Backfill shall not be placed against any structure until permission is given by the Engineer. In the case of concrete, such permission shall not be given until tests made by the laboratory under supervision of the Engineer establish that the concrete has attained sufficient strength to provide a factor of safety against damage or strain in withstanding any pressure created by the backfill or the methods used in placing it.

Where required, the Engineer may direct the Contractor to add, at his own expense, sufficient water during compaction to assure a complete consolidation of the backfill. The Contractor shall be responsible for all damage or injury done to conduits, duct banks, structures, property or persons due to improper placing or compacting of backfill.

115-3.8 CONNECTION OF DUCT BANKS. To relieve stress of joint between concrete-encased duct banks and structure walls, reinforcement rods shall be placed in the structure wall and shall be formed and tied into duct bank reinforcement at the time the duct bank is installed.

115-3.9 GROUNDING. A ground rod shall be installed in the floor of all concrete structures so that the top of rod extends 6 inches (154 mm) above the floor. The ground rod shall be installed within 1 foot of a corner of the

concrete structure. Ground rods shall be installed prior to casting the bottom slab. Where the soil condition does not permit driving the ground rod into the earth without damage to the ground rod, the Contractor shall drill a 4-inch diameter hole into the earth to receive the ground rod. The hole around the ground rod shall be filled throughout its length, below slab, with Portland cement grout. Ground rods shall be installed in precast bottom slab of structures by drilling a hole through bottom slab and installing the ground rod. Bottom slab penetration shall be sealed watertight with Portland cement grout around the ground rod.

A grounding bus of 4/0 bare stranded copper shall be exothermically bonded to the ground rod and loop the concrete structure walls. The ground bus shall be a minimum of 1 foot above the floor of the structure and separate from other cables. No. 2 AWG bare copper pigtails shall bond the grounding bus to all cable trays and other metal hardware within the concrete structure. Connections to the grounding bus shall be exothermic. Hardware connections may be mechanical, using a lug designed for that purpose.

115-3.10 CLEANUP AND REPAIR. After erection of all galvanized items, damaged areas shall be repaired by applying a liquid cold-galvanizing compound conforming MIL-P-21035. Surfaces shall be prepared and compound applied in accordance with manufacturer's recommendations.

Prior to acceptance, the entire structure shall be cleaned of all dirt and debris.

115-3.11 RESTORATION. After the backfill is completed, the Contractor shall dispose of all surplus material, dirt and rubbish from the site. The Contractor shall restore all disturbed areas equivalent to or better than their original condition. All sodding, grading and restoration shall be considered incidental to the respective L-115 pay item.

The Contractor shall grade around structures as required to provide positive drainage away from the structure.

Areas with special surface treatment, such as roads, sidewalks, or other paved areas shall have backfill compacted to match surrounding areas, and surfaces shall be repaired using materials comparable to original materials.

After all work is completed, the Contractor shall remove all tools and other equipment, leaving the entire site free, clear and in good condition.

115-3.12 INSPECTION. Prior to final approval, the electrical structures shall be thoroughly inspected for conformance with the plans and this specification. Any indication of defects in materials or workmanship shall be further investigated and corrected. The earth resistance to ground of each ground rod shall not exceed 25 ohms. Each ground rod shall be tested utilizing the fall-of-potential ground impedance test as described by ANSI IEEE Standard 81. This test shall be performed prior to establishing connections to other ground electrodes.

115-3.13 Manhole Elevation Adjustments. The Contractor shall adjust the tops of existing manholes in areas designated in the Contract Documents to the new elevations shown. The Contractor shall be responsible for determining the exact height adjustment required to raise the top of each manhole to the new elevations. The existing top elevation of each manhole to be adjusted shall be determined in the field and subtracted/added from the proposed top elevation.

The Contractor shall remove/extend the existing top section or ring and cover on the manhole structure or manhole access. The Contractor shall then install precast concrete sections or grade rings of the required dimensions to adjust the manhole top to the new proposed elevation or shall cut the existing manhole walls to shorten the existing structure, as required by final grades. Finally, the Contractor shall reinstall the manhole top section or ring and cover on top and check the new top elevation.

The Contractor shall construct a concrete slab around the top of adjusted structures located in graded areas that are not to be paved. The concrete slab shall conform to the dimensions shown on the plans.

* * * *

Item L-115-5.2	Electrical Junction Structure [size and type] -Per Each
Item L-115-5.3	Existing Electrical Manhole/Junction Structure Elevation Adjustment [size and type] –Per Each

MATERIAL REQUIREMENTS

ANSI/IEEE Std 81	IEEE Guide for Measuring Earth Resistivity, Ground Impedance, and Earth Surface Potentials of a Ground System
AC 150/5345-7	Specification for L-824 Underground Electrical Cable for Airport Lighting Circuits
AC 150/5345-26	Specification for L-823 Plug and Receptacle Cable Connectors
FED SPEC J-C-30	Cable and Wire, Electrical Power, Fixed Installation (cancelled; replaced by AA-59544 Cable and Wire, Electrical (Power, Fixed Installation))
ASTM B.3	Soft or Annealed Copper Wire
ASTM B.8	Concentric-Lay-Stranded Copper Conductor, Hard, Medium-Hard, or Soft

END OF ITEM L-115

ITEM L-119 AIRPORT OBSTRUCTION LIGHTS

DESCRIPTION

119-1.1 This item shall consist of furnishing and installing obstruction lights in accordance with these specifications. Included in this item shall be the furnishing and installing of wood poles, steel or iron pipes, or other supports as required in the plans or specifications.

This item shall also include all wire and cable connections, the furnishing and installing of all necessary conduits and fittings, insulators, pole steps, pole cross arms, and the painting of poles and pipes. In addition, it includes the furnishing and installing of all lamps and, if required, the furnishing and installing of insulating transformers, the servicing and testing of the installation and all incidentals necessary to place the lights in operation as completed units to the satisfaction of the Engineer.

EQUIPMENT AND MATERIALS

119-2.1 GENERAL.

a. Airport lighting equipment and materials covered by Federal Aviation Administration (FAA) specifications shall be certified and listed under Advisory Circular (AC) 150/5345-53, Airport Lighting Equipment Certification Program.

b. All other equipment and materials covered by other reference specifications shall be subject to acceptance through manufacturer's certification of compliance with the applicable specification when requested by the Engineer.

c. Manufacturer's certifications shall not relieve the Contractor of the Contractor’s responsibility to provide materials in accordance with these specifications and acceptable to the Engineer. Materials supplied and/or installed that do not materially comply with these specifications shall be removed, when directed by the Engineer and replaced with materials, which do comply with these specifications, at the sole cost of the Contractor.

d. All materials and equipment used to construct this item shall be submitted to the Engineer for approval prior to ordering the equipment. Submittals consisting of marked catalog sheets or shop drawings shall be provided. Submittal data shall be presented in a clear, precise and thorough manner. Original catalog sheets are preferred. Photocopies are acceptable provided they are as good a quality as the original. Clearly and boldly mark each copy to identify pertinent products or models applicable to this project. Indicate all optional equipment and delete non-pertinent data. Submittals for components of electrical equipment and systems shall identify the equipment for which they apply on each submittal sheet. Markings shall be boldly and clearly made with arrows or circles (highlighting is not acceptable). Contractor is solely responsible for delays in project accruing directly or indirectly from late submissions or resubmissions of submittals.

e. The data submitted shall be sufficient, in the opinion of the Engineer, to determine compliance with the plans and specifications. [The Contractor's submittals shall be neatly bound in a properly sized 3-ring binder, tabbed by specification section.] The Engineer reserves the right to reject any and all equipment, materials or procedures, which, in the Engineer’s opinion, does not meet the system design and the standards and codes, specified herein.

f. All equipment and materials furnished and installed under this section shall be guaranteed against defects in materials and workmanship for a period of at least [twelve (12) months] from final acceptance by the Owner. The defective materials and/or equipment shall be repaired or replaced, at the Owner's discretion, with no additional cost to the Owner.

* * * *

When obstruction lights are installed on existing telephone or power poles, a large fiber insulating sleeve of adequate diameter and not less than 4-feet (120 cm) long, shall be installed to extend 6 inches (150 mm) above the conductors on the upper cross arm. In addition, the sleeve shall be at least 18 inches (45 cm) below the conductors on the lower crossarm. The details of this installation shall be in accordance with the plans.

119-3.3 INSTALLATION ON BEACON TOWER. Where obstruction lights are installed on a beacon tower, two obstruction lights shall be mounted on top of the beacon tower using 1-inch (25 mm) conduit. The conduit shall screw directly into the obstruction light fixtures and shall support them at a height of not less than 4 inches (100 mm) above the top of the rotating beacon. If obstruction lights are specified at lower levels, the Contractor shall install not less than 1-inch (25 mm) galvanized rigid steel conduit with standard conduit fittings for mounting the fixtures. The fixtures shall be mounted in an upright position in all cases. The conduit shall be fastened to the tower members with "wraplock" straps, clamps, or approved fasteners spaced approximately 5 feet (150 cm) apart. Three coats of aviation-orange paint shall be applied (one prime, one body, and one finish coat) to all exposed material installed.

119 3.4 INSTALLATION ON BUILDINGS, TOWERS, SMOKESTACKS, ETC. Where obstruction lights are to be installed on buildings or similar structures, the installation shall be made in accordance with details shown in the plans. The hub of the obstruction light shall be not less than 1 foot (30 cm) above the highest point of the obstruction except in the case of smokestacks where the uppermost units shall be mounted not less than 5 feet (150 cm), nor more than 10 feet (3 m) below the top of the stack. Conduit supporting the obstruction light units shall be fastened to wooden structures with galvanized steel pipe straps and shall be secured by 1-½ inch (37 mm) No. 10 galvanized wood screws. Conduit shall be fastened to masonry structures by the use of expansion shields, screw anchors, or toggle bolts using No. 10, or larger, galvanized wood or machine screws. Conduit fastened to structural steel shall have the straps held with not less than No. 10 roundhead machine screws in drilled and tapped holes. Fastenings shall be approximately 5 feet (150 cm) apart. Three coats of aviation-orange paint shall be applied (one prime, one body, and one finish coat) to all exposed material installed.

119-3.5 SERIES ISOLATION TRANSFORMERS. The L-810 series obstruction light does not include a film cutout; therefore, an isolation transformer is required with each series lamp. Double series units of this type require two series insulating transformers. The transformer shall be housed in a base or buried directly in the earth in accordance with the details shown in the plans.

119-3.6 WIRING. The Contractor shall furnish all necessary labor and materials and shall make complete electrical connections from the underground cable or other source of power in accordance with the wiring diagram furnished with the project plans. If underground cable is required for the power feed and if duct is required under paved areas, the cable and duct shall be installed in accordance with and paid for as described in Item L-108, Underground Power Cable for Airports, and Item L-110, Airport Underground Electrical Duct Banks and Conduit.

119-3.7 LAMPS. The Contractor shall furnish and install in each unit one or two lamps, as required, conforming to the manufacturer's requirements.

119-3.8 TESTS. The installation shall be fully tested by continuous operation for not less than 1/2 hour as a completed unit prior to acceptance. These tests shall include the functioning of each control not less than 10 times.

METHOD OF MEASUREMENT

119-4.1 The quantity of lights to be paid for under this item shall be the number of single- or double-type obstruction lights installed and accepted as completed units, in place, ready for operation.

BASIS OF PAYMENT

119-5.1 Payment will be made at the contract unit price for each completed obstruction light installed, in place by the Contractor, and accepted by the Engineer. This price shall be full compensation for furnishing all materials and for all preparation, assembly, and installation of these materials, and for all labor, equipment, tools, and incidentals necessary to complete this item.

Payment will be made under:

Item L-119-5.1	Airport Obstruction Light, in Place-per each

MATERIAL REQUIREMENTS

AC 150/5345-7	Specification for L-824 Underground Electrical Cable for Airport Lighting Circuits
AC 150/5345-42	Specification for Airport Light Base and Transformer Housing, Junction Boxes, and Accessories
AC 150/5345-43	Specification for Obstruction Lighting Equipment
AC 150/5345-47	Isolation Transformers for Airport Lighting Systems
ANSI/ICEA S-70-547-1992	Weather-Resistant Polyolefin-Covered Wire and Cable
FED SPEC J-C-30	Cable and Wire, Electrical (Power, Fixed Installation) (cancelled; replaced by AA-59544 Cable and Wire, Electrical (Power, Fixed Installation))

END OF ITEM L-119