U.S. Department of Transportation
Federal Aviation Administration

Advisory Circular

Subject: STANDARDS FOR SPECIFYING CONSTRUCTION OF AIRPORTS	**Date:** 4/25/2005 **Initiated by:** AAS-100	**AC No.:** 150/5370-10B **Change:**

1. PURPOSE. This advisory circular (AC) provides standards for the construction of airports. Items covered in this AC include general provisions, earthwork, flexible base courses, rigid base courses, flexible surface courses, rigid pavement, miscellaneous, fencing, drainage, turfing, and lighting installation.

2. FOCUS. Projects funded under the Airport Improvement Program (AIP) must be developed in accordance with standards developed by the secretary of transportation. The standards contained in this AC relate to materials and methods used in the construction of airports.

3. CANCELLATION. AC 150/5370-10A, Standards for Specifying Construction of Airports, dated February 17, 1989, is cancelled.

4. BACKGROUND. This revised AC incorporates Changes 1 through 14 previously contained in AC 150/5370-10A. ASTM, MIL SPEC, and FED SPEC testing and material requirements have been updated. Engineering brief EB-No. 55 Controlled Low Strength Material has been incorporated into this revision as Item P-153.

5. PRINCIPAL CHANGES:

a. Part I – General Provisions: Section 120, Nuclear Gages, has been added.

b. Part II – Earthwork. New specifications Item P-153, Controlled Low-Strength Material (CLSM); Item P-157, Cement Kiln Dust (CKD) Treated Subgrade; and Item P-158, Fly Ash Treated Subgrade were added.

c. Part V – Flexible Surface Courses. New specification Item P-403, Plant Mix Bituminous Pavements (Base, Leveling or Surface Course) was added.

d. Part VI – Rigid Pavement. Item P-501 has been revised to include pertinent recommendations from user-producer groups (DoD, industry), more specific aggregate reactivity testing requirements, as well as additional FAA regional requirements.

e. Part VII – Miscellaneous. New specifications Item P-604, Compression Seals for Concrete Pavements; Item P-630, Refined Coal Tar Emulsion Without Additives, Slurry Seal Surface Treatment; Item P-631, Refined Coal Tar Emulsion with Additives, Slurry Seal Surface Treatment were added. New guidance for reflective media coatings and new cleanup requirements has been added to Item P-620 Runway and Taxiway Painting.

f. Part VIII – Fencing. New specification Item F-163, Wildlife Deterrent Fence, was added.

g. Part XI – Lighting Installation:

i. Items were revised to reflect installation guidelines. Published in AC 150/5340-30, Design and Installation Details for Airport Visual Aids.

ii. Requirements for shop drawings have been clarified in each item.

iii. New specification Item L-115, Electrical Manholes and Junction Structures, has been added.

6. APPLICATION. The standards contained herein are recommended by the Federal Aviation Administration (FAA) for use in the construction of airports. For federally funded projects, the standards are mandatory.

7. METRICS. To promote an orderly transition to metric units, this AC contains both English and metric dimensions. The metric conversions may not be exact metric equivalents, and, until there is an official changeover to the metric system, the English dimensions will govern.

8. COMMENTS OR SUGGESTIONS for improvements to this AC should be sent to:

Manager, Airport Engineering Division
Federal Aviation Administration
ATTN: AAS-100
800 Independence Avenue, S.W.
Washington D.C. 20591

9. COPIES OF THIS AC. The Office of Airport Safety and Standards is in the process of making ACs available to the public through the Internet. These ACs may be found on the Federal Aviation Administration (FAA) website at http://www.faa.gov/airports_airtraffic/airports/ resources/advisory_circulars/. A printed copy of this and other ACs can be ordered from the U.S. Department of Transportation, Subsequent Business Office, Annmore East Business Center, 3341 Q 75th Avenue, Landover, Maryland, 20785.

David L. Bennett
Director of Airport Safety and Standards

TABLE OF CONTENTS

NOTICE TO USERS ..... **V**

PART I – GENERAL PROVISIONS **GP-1**
SECTION 10 DEFINITION OF TERMS GP-1
SECTION 20 PROPOSAL REQUIREMENTS AND CONDITIONS GP-5
SECTION 30 AWARD AND EXECUTION OF CONTRACT GP-9
SECTION 40 SCOPE OF WORK GP-11
SECTION 50 CONTROL OF WORK GP-15
SECTION 60 CONTROL OF MATERIALS GP-23
SECTION 70 LEGAL REGULATIONS AND RESPONSIBILITY TO PUBLIC GP-27
SECTION 80 PROSECUTION AND PROGRESS GP-35
SECTION 90 MEASUREMENT AND PAYMENT GP-43
SECTION 100 CONTRACTOR QUALITY CONTROL PROGRAM GP-49
SECTION 110 METHOD OF ESTIMATING PERCENTAGE OF MATERIAL WITHIN SPECIFICATION LIMITS (PWL) GP-55
SECTION 120 NUCLEAR GAGES GP-61

PART II – EARTHWORK **P-101-1**
ITEM P-101 SURFACE PREPARATION P-101-1
ITEM P-151 CLEARING AND GRUBBING P-151-1
ITEM P-152 EXCAVATION AND EMBANKMENT P-152-1
ITEM P-153 CONTROLLED LOW-STRENGTH MATERIAL (CLSM) P-153-1
ITEM P-154 SUBBASE COURSE P-154-1
ITEM P-155 LIME-TREATED SUBGRADE P-155-1
ITEM P-156 TEMPORARY AIR AND WATER POLLUTION, SOIL EROSION, AND SILTATION CONTROL P-156-1
ITEM P-157 CEMENT KILN DUST (CKD) TREATED SUBGRADE P-157-1
ITEM P-158 FLY ASH TREATED SUBGRADE P-158-1

PART III – FLEXIBLE BASE COURSES **P-208-1**
ITEM P-208 AGGREGATE BASE COURSE P-208-1
ITEM P-209 CRUSHED AGGREGATE BASE COURSE P-209-1
ITEM P-210 CALICHE BASE COURSE P-210-1
ITEM P-211 LIME ROCK BASE COURSE P-211-1
ITEM P-212 SHELL BASE COURSE P-212-1
ITEM P-213 SAND-CLAY BASE COURSE P-213-1
ITEM P-217 AGGREGATE-TURF PAVEMENT P-217-1

PART IV – RIGID BASE COURSES **P-301-1**
ITEM P-301 SOIL-CEMENT BASE COURSE P-301-1
ITEM P-304 CEMENT-TREATED BASE COURSE P-304-1
ITEM P-306 ECONOCRETE BASE COURSE (Lean Mix Concrete Base Course) P-306-1

PART V – FLEXIBLE SURFACE COURSES **P-401-1**
ITEM P-401 PLANT MIX BITUMINOUS PAVEMENTS P-401-1
ITEM P-402 POROUS FRICTION COURSE P-402-1
ITEM P-403 PLANT MIX BITUMINOUS PAVEMENTS (Base, Leveling or Surface Course) P-403-1

PART VI – RIGID PAVEMENT **P-501-1**
ITEM P-501 PORTLAND CEMENT CONCRETE PAVEMENT P-501-1

PART VII – MISCELLANEOUS **P-602-1**
ITEM P-602 BITUMINOUS PRIME COAT P-602-1
ITEM P-603 BITUMINOUS TACK COAT P-603-1
ITEM P-604 COMPRESSION JOINT SEALS FOR CONCRETE PAVEMENTS P-604-1
ITEM P-605 JOINT SEALING FILLER P-605-1

ITEM P-606 ADHESIVE COMPOUNDS, TWO-COMPONENT FOR SEALING WIRE AND LIGHTS IN PAVEMENT P-606-1
ITEM P-609 SEAL COATS AND BITUMINOUS SURFACE TREATMENTS P-609-1
ITEM P-610 STRUCTURAL PORTLAND CEMENT CONCRETE P-610-1
ITEM P-620 RUNWAY AND TAXIWAY PAINTING P-620-1
ITEM P-626 EMULSIFIED ASPHALT SLURRY SEAL SURFACE TREATMENT P-626-1
ITEM P-630 REFINED COAL TAR EMULSION WITHOUT ADDITIVES, SLURRY SEAL SURFACE TREATMENT P-630-1
ITEM P-631 REFINED COAL TAR EMULSION WITH ADDITIVES, SLURRY SEAL SURFACE TREATMENT P-631-1

PART VIII – FENCING F-160-1
ITEM F-160 WIRE FENCE WITH WOOD POSTS (Classes A and B Fences) F-160-1
ITEM F-161 WIRE FENCE WITH STEEL POSTS (Classes C and D Fences) F-161-1
ITEM F-162 CHAIN-LINK FENCES F-162-1
ITEM F-163 WILDLIFE DETERRENT FENCE F-163-1

PART IX – DRAINAGE D-701-1
ITEM D-701 PIPE FOR STORM DRAINS AND CULVERTS D-701-1
ITEM D-702 SLOTTED DRAINS D-702-1
ITEM D-705 PIPE UNDERDRAINS FOR AIRPORTS D-705-1
ITEM D-751 MANHOLES, CATCH BASINS, INLETS AND INSPECTION HOLES D-751-1
ITEM D-752 CONCRETE CULVERTS, HEADWALLS, AND MISCELLANEOUS D-752-1
ITEM D-754 CONCRETE GUTTERS, DITCHES, AND FLUMES D-754-1

PART X – TURFING T-901-1
ITEM T-901 SEEDING T-901-1
ITEM T-903 SPRIGGING T-903-1
ITEM T-904 SODDING T-904-1
ITEM T-905 TOPSOILING T-905-1
ITEM T-907 TILLING T-907-1
ITEM T-908 MULCHING T-908-1

PART XI – LIGHTING INSTALLATION L-101-1
ITEM L-101 AIRPORT ROTATING BEACONS L-101-1
ITEM L-102 HAZARD BEACON L-102-1
ITEM L-103 AIRPORT BEACON TOWERS L-103-1
ITEM L-107 AIRPORT 8-FOOT AND 12-FOOT WIND CONES L-107-1
ITEM L-108 UNDERGROUND POWER CABLE FOR AIRPORTS L-108-1
ITEM L-109 AIRPORT TRANSFORMER VAULT AND VAULT EQUIPMENT L-109-1
ITEM L-110 AIRPORT UNDERGROUND ELECTRICAL DUCT BANKS AND CONDUITS L-110-1
ITEM L-115 ELECTRICAL MANHOLES AND JUNCTION STRUCTURES L-115-1
ITEM L-119 AIRPORT OBSTRUCTION LIGHTS L-119-1

NOTICE TO USERS

Projects funded under the Airport Improvement Program (AIP) must be developed in accordance with the policies, standards, and specifications approved by the Secretary, Department of Transportation. The standards contained in this advisory circular (AC) relate to materials and methods used in the construction of airports.

To the Airport Owner—This AC is required as part of your grant agreement. The plans and specifications that will result from this AC will be part of the construction agreement.

To the Consultant—This AC is required for the project as part of the grant assurances. The plans and specifications that will result from this AC are part of the project and are also required for the grant assurances.

Since it is not feasible to provide construction specifications that can be applied to all geographical areas of the United States, its territories and possessions, the guide specifications in this AC should be used in developing project specifications. The verbatim incorporation of these standards in contract specifications is not practical because of the numerous decisions that must be made by the Engineer regarding local materials, methods, and requirements. For this reason, the notes (shown between lines of asterisks) elaborate on the options available to the Engineer when preparing a specification and to ensure that sound engineering judgment is applied.

Appropriate changes and additions required by the notes must be made. Where numbers, words, phrases or sentences are enclosed in brackets [ ], a choice or modification must be made. Where blank spaces [ ] occur in sentences, the appropriate data must be inserted. Where entire paragraphs are not applicable, they should be deleted. Additional sentences may be added if necessary. The final project specifications shall not include notes to the Engineer.

The standards should be used to develop construction specifications for either (1) a particular state, or (2) an individual project. They will not be made a part of a contract merely by reference. Pertinent portions should be copied verbatim into the contract documents.

For state specifications, the necessary choices and engineering judgments should be made to develop the standards into specifications for a particular state. On approval by the FAA, these state specifications may be incorporated in construction contracts by reference. The state specifications must be readily available to all parties interested in such contracts.

For individual projects, construction specifications may be produced by making the necessary choices and engineering judgments and developing the standards into specifications for a particular project.

FAA Airports field representatives, designated by regional offices, have the authority to approve modifications to standards contained in this AC if the modifications provide acceptable levels of safety, economy, durability, and workmanship and are necessary to meet local conditions. When preparing construction contracts for AIP projects, the user should contact these FAA representatives to obtain the mandatory provisions (wage, labor, EEO, etc.) that must be included in all AIP contract proposals. Additional contract clauses may be required to comply with local and state laws relating to advertising, awarding, and administrating construction contracts.

The Office of Airport Safety and Standards is in the process of making ACs available to the public through the Internet. These ACs may be found on the Federal Aviation Administration (FAA) website at **http://www.faa.gov/airports_airtraffic/airports/ resources/advisory_circulars/.** A printed copy of this and other ACs can be ordered from the U.S. Department of Transportation, Subsequent Business Office, Annmore East Business Center, 3341 Q 75th Avenue, Landover, Maryland, 20785.

Intentionally Left Blank

PART I – GENERAL PROVISIONS
SECTION 10
DEFINITION OF TERMS

Whenever the following terms are used in these specifications, in the contract, or in any documents or other instruments pertaining to construction where these specifications govern, the intent and meaning shall be interpreted as follows:

10-01 AASHTO. The American Association of State Highway and Transportation Officials, the successor association to AASHO.

10-02 ACCESS ROAD. The right-of-way, the roadway and all improvements constructed thereon connecting the airport to a public highway.

10-03 ADVERTISEMENT. A public announcement, as required by local law, inviting bids for work to be performed and materials to be furnished.

10-04 AIP. The Airport Improvement Program, a grant-in-aid program, administered by the Federal Aviation Administration.

10-05 AIR OPERATIONS AREA. For the purpose of these specifications, the term air operations area shall mean any area of the airport used or intended to be used for the landing, takeoff, or surface maneuvering of aircraft. An air operation area shall include such paved or unpaved areas that are used or intended to be used for the unobstructed movement of aircraft in addition to its associated runway, taxiway, or apron.

10-06 AIRPORT. Airport means an area of land or water which is used or intended to be used for the landing and takeoff of aircraft; an appurtenant area used or intended to be used for airport buildings or other airport facilities or rights of way; and airport buildings and facilities located in any of these areas, and includes a heliport.

10-07 ASTM. The American Society for Testing and Materials.

10-08 AWARD. The acceptance, by the Owner, of the successful bidder's proposal.

10-09 BIDDER. Any individual, partnership, firm, or corporation, acting directly or through a duly authorized representative, who submits a proposal for the work contemplated.

10-10 BUILDING AREA. An area on the airport to be used, considered, or intended to be used for airport buildings or other airport facilities or rights-of-way together with all airport buildings and facilities located thereon.

10-11 CALENDAR DAY. Every day shown on the calendar.

10-12 CHANGE ORDER. A written order to the Contractor covering changes in the plans, specifications, or proposal quantities and establishing the basis of payment and contract time adjustment, if any, for the work affected by such changes. The work, covered by a change order, shall be within the scope of the contract.

10-13 CONTRACT. The written agreement covering the work to be performed. The awarded contract shall include, but is not limited to: The Advertisement; The Contract Form; The Proposal; The Performance Bond; The Payment Bond; any required insurance certificates; The Specifications; The Plans, and any addenda issued to bidders.

10-14 CONTRACT ITEM (PAY ITEM). A specific unit of work for which a price is provided in the contract.

10-15 CONTRACT TIME. The number of calendar days or working days, stated in the proposal, allowed for completion of the contract, including authorized time extensions. If a calendar date of completion is stated in the proposal, in lieu of a number of calendar or working days, the contract shall be completed by that date.

10-16 CONTRACTOR. The individual, partnership, firm, or corporation primarily liable for the acceptable performance of the work contracted and for the payment of all legal debts pertaining to the work who acts directly or through lawful agents or employees to complete the contract work.

10-17 DRAINAGE SYSTEM. The system of pipes, ditches, and structures by which surface or subsurface waters are collected and conducted from the airport area.

10-18 ENGINEER. The individual, partnership, firm, or corporation duly authorized by the Owner to be responsible for engineering inspection of the contract work and acting directly or through an authorized representative.

10-19 EQUIPMENT. All machinery, together with the necessary supplies for upkeep and maintenance, and also all tools and apparatus necessary for the proper construction and acceptable completion of the work.

10-20 EXTRA WORK. An item of work not provided for in the awarded contract as previously modified by change order or supplemental agreement, but which is found by the Engineer to be necessary to complete the work within the intended scope of the contract as previously modified.

10-21 FAA. The Federal Aviation Administration of the U.S. Department of Transportation. When used to designate a person, FAA shall mean the Administrator or his/her duly authorized representative.

10-22 FEDERAL SPECIFICATIONS. The Federal Specifications and Standards, Commercial Item Descriptions, and supplements, amendments, and indices thereto are prepared and issued by the General Services Administration of the Federal Government.

10-23 FORCE ACCOUNT. Force account construction work is construction that is accomplished through the use of material, equipment, labor, and supervision provided by the Owner or by another public agency pursuant to an agreement with the Owner.

10-24 INSPECTOR. An authorized representative of the Engineer assigned to make all necessary inspections and/or tests of the work performed or being performed, or of the materials furnished or being furnished by the Contractor.

10-25 INTENTION OF TERMS. Whenever, in these specifications or on the plans, the words ``directed,'' ``required,'' ``permitted,'' ``ordered,'' ``designated,'' ``prescribed,'' or words of like import are used, it shall be understood that the direction, requirement, permission, order, designation, or prescription of the Engineer is intended; and similarly, the words ``approved,'' ``acceptable,'' ``satisfactory,'' or words of like import, shall mean approved by, or acceptable to, or satisfactory to the Engineer, subject in each case to the final determination of the Owner.

Any reference to a specific requirement of a numbered paragraph of the contract specifications or a cited standard shall be interpreted to include all general requirements of the entire section, specification item, or cited standard that may be pertinent to such specific reference.

10-26 LABORATORY. The official testing laboratories of the Owner or such other laboratories as may be designated by the Engineer.

10-27 LIGHTING. A system of fixtures providing or controlling the light sources used on or near the airport or within the airport buildings. The field lighting includes all luminous signals, markers, floodlights, and illuminating devices used on or near the airport or to aid in the operation of aircraft landing at, taking off from, or taxiing on the airport surface.

10-28 MAJOR AND MINOR CONTRACT ITEMS. A major contract item shall be any item that is listed in the proposal, the total cost of which is equal to or greater than 20 percent of the total amount of the award contract. All other items shall be considered minor contract items.

10-29 MATERIALS. Any substance specified for use in the construction of the contract work.

10-30 NOTICE TO PROCEED. A written notice to the Contractor to begin the actual contract work on a previously agreed to date. If applicable, the Notice to Proceed shall state the date on which the contract time begins.

10-31 OWNER. The term "Owner" shall mean the party of the first part or the contracting agency signatory to the contract. For AIP contracts, the term "sponsor" shall have the same meaning as the term "Owner." Where the term "Owner" is capitalized in this document, it shall mean airport owner or sponsor only.

10-32 PAVEMENT. The combined surface course, base course, and subbase course, if any, considered as a single unit.

10-33 PAYMENT BOND. The approved form of security furnished by the Contractor and his/her surety as a guaranty that he will pay in full all bills and accounts for materials and labor used in the construction of the work.

10-34 PERFORMANCE BOND. The approved form of security furnished by the Contractor and his/her surety as a guaranty that the Contractor will complete the work in accordance with the terms of the contract.

10-35 PLANS. The official drawings or exact reproductions which show the location, character, dimensions and details of the airport and the work to be done and which are to be considered as a part of the contract, supplementary to the specifications.

10-36 PROJECT. The agreed scope of work for accomplishing specific airport development with respect to a particular airport.

10-37 PROPOSAL. The written offer of the bidder (when submitted on the approved proposal form) to perform the contemplated work and furnish the necessary materials in accordance with the provisions of the plans and specifications.

10-38 PROPOSAL GUARANTY. The security furnished with a proposal to guarantee that the bidder will enter into a contract if his/her proposal is accepted by the Owner.

10-39 RUNWAY. The area on the airport prepared for the landing and takeoff of aircraft.

10-40 SPECIFICATIONS. A part of the contract containing the written directions and requirements for completing the contract work. Standards for specifying materials or testing which are cited in the contract specifications by reference shall have the same force and effect as if included in the contract physically.

10-41 SPONSOR. See definition above of "Owner."

10-42 STRUCTURES. Airport facilities such as bridges; culverts; catch basins, inlets, retaining walls, cribbing; storm and sanitary sewer lines; water lines; underdrains; electrical ducts, manholes, handholes, lighting fixtures and bases; transformers; flexible and rigid pavements; navigational aids; buildings; vaults; and, other manmade features of the airport that may be encountered in the work and not otherwise classified herein.

10-43 SUBGRADE. The soil that forms the pavement foundation.

10-44 SUPERINTENDENT. The Contractor's executive representative who is present on the work during progress, authorized to receive and fulfill instructions from the Engineer, and who shall supervise and direct the construction.

10-45 SUPPLEMENTAL AGREEMENT. A written agreement between the Contractor and the Owner covering (1) work that would increase or decrease the total amount of the awarded contract, or any major contract item, by more than 25 percent, such increased or decreased work being within the scope of the originally awarded contract; or (2) work that is not within the scope of the originally awarded contract.

10-46 SURETY. The corporation, partnership, or individual, other than the Contractor, executing payment or performance bonds that are furnished to the Owner by the Contractor.

10-47 TAXIWAY. For the purpose of this document, the term taxiway means the portion of the air operations area of an airport that has been designated by competent airport authority for movement of aircraft to and from the airport's runways or aircraft parking areas.

10-48 WORK. The furnishing of all labor, materials, tools, equipment, and incidentals necessary or convenient to the Contractor's performance of all duties and obligations imposed by the contract, plans, and specifications.

10-49 WORKING DAY. A working day shall be any day other than a legal holiday, Saturday, or Sunday on which the normal working forces of the Contractor may proceed with regular work for at least 6 hours toward completion of the contract when work is suspended for causes beyond the Contractor's control, Saturdays, Sundays and holidays on which the Contractor's forces engage in regular work, requiring the presence of an inspector, will be considered as working days.

END OF SECTION 10

SECTION 20
PROPOSAL REQUIREMENTS AND CONDITIONS

20-01 ADVERTISEMENT (Notice to Bidders).

* * * *

For AIP contracts, the proposal shall conform to the requirements of local laws and ordinances pertaining to letting of contracts.

* * * *

for which a quantity is given. The bidder shall state the price (written in ink or typed) both in words and numerals for which he proposes to do each pay item furnished in the proposal. In case of conflict between words and numerals, the words, unless obviously incorrect, shall govern.

The bidder shall sign his/her proposal correctly and in ink. If the proposal is made by an individual, his/her name and post office address must be shown. If made by a partnership, the name and post office address of each member of the partnership must be shown. If made by a corporation, the person signing the proposal shall give the name of the state under the laws of which the corporation was chartered and the name, titles, and business address of the president, secretary, and the treasurer. Anyone signing a proposal as an agent shall file evidence of his/her authority to do so and that the signature is binding upon the firm or corporation.

20-08 IRREGULAR PROPOSALS. Proposals shall be considered irregular for the following reasons:

* * * *

additional envelope. No proposal will be considered unless received at the place specified in the advertisement before the time specified for opening all bids. Proposals received after the bid opening time shall be returned to the bidder unopened.

20-11 WITHDRAWAL OR REVISION OF PROPOSALS. A bidder may withdraw or revise (by withdrawal of one proposal and submission of another) a proposal provided that the bidder's request for withdrawal is received by the Owner in writing or by telegram before the time specified for opening bids. Revised proposals must be received at the place specified in the advertisement before the time specified for opening all bids.

20-12 PUBLIC OPENING OF PROPOSALS. Proposals shall be opened, and read, publicly at the time and place specified in the advertisement. Bidders, their authorized agents, and other interested persons are invited to attend. Proposals that have been withdrawn (by written or telegraphic request) or received after the time specified for opening bids shall be returned to the bidder unopened.

20-13 DISQUALIFICATION OF BIDDERS. A bidder shall be considered disqualified for any of the following reasons:

a. Submitting more than one proposal from the same partnership, firm, or corporation under the same or different name.

b. Evidence of collusion among bidders. Bidders participating in such collusion shall be disqualified as bidders for any future work of the Owner until any such participating bidder has been reinstated by the Owner as a qualified bidder.

c. If the bidder is considered to be in ``default'' for any reason specified in the subsection titled ISSUANCE OF PROPOSAL FORMS of this section.

END OF SECTION 20

SECTION 30
AWARD AND EXECUTION OF CONTRACT

30-01 CONSIDERATION OF PROPOSALS. After the proposals are publicly opened and read, they will be compared on the basis of the summation of the products obtained by multiplying the estimated quantities shown in the proposal by the unit bid prices. If a bidder's proposal contains a discrepancy between unit bid prices written in words and unit bid prices written in numbers, the unit price written in words shall govern.

Until the award of a contract is made, the Owner reserves the right to reject a bidder's proposal for any of the following reasons:

a. If the proposal is irregular as specified in the subsection titled IRREGULAR PROPOSALS of Section 20.

b. If the bidder is disqualified for any of the reasons specified in the subsection titled DISQUALIFICATION OF BIDDERS of Section 20.

In addition, until the award of a contract is made, the Owner reserves the right to reject any or all proposals, waive technicalities, if such waiver is in the best interest of the Owner and is in conformance with applicable state and local laws or regulations pertaining to the letting of construction contracts; advertise for new proposals; or proceed with the work otherwise. All such actions shall promote the Owner's best interests.

30-02 AWARD OF CONTRACT. The award of a contract, if it is to be awarded, shall be made within [ ] calendar days of the date specified for publicly opening proposals, unless otherwise specified herein.

* * * *

30-05 REQUIREMENTS OF CONTRACT BONDS. At the time of the execution of the contract, the successful bidder shall furnish the Owner a surety bond or bonds that have been fully executed by the bidder and the surety guaranteeing the performance of the work and the payment of all legal debts that may be incurred by reason of the Contractor's performance of the work. The surety and the form of the bond or bonds shall be acceptable to the Owner. Unless otherwise specified in this subsection, the surety bond or bonds shall be in a sum equal to the full amount of the contract.

* * * *

SECTION 40
SCOPE OF WORK

40-01 INTENT OF CONTRACT. The intent of the contract is to provide for construction and completion, in every detail, of the work described. It is further intended that the Contractor shall furnish all labor, materials, equipment, tools, transportation, and supplies required to complete the work in accordance with the plans, specifications, and terms of the contract.

40-02 ALTERATION OF WORK AND QUANTITIES. The owner reserves and shall have the right to make such alterations in the work as may be necessary or desirable to complete the work originally intended in an acceptable manner. Unless otherwise specified herein, the Engineer shall be and is hereby authorized to make such alterations in the work as may increase or decrease the originally awarded contract quantities, provided that the aggregate of such alterations does not change the total contract cost or the total cost of any major contract item by more than 25 percent (total cost being based on the unit prices and estimated quantities in the awarded contract). Alterations that do not exceed the 25 percent limitation shall not invalidate the contract nor release the surety, and the Contractor agrees to accept payment for such alterations as if the altered work had been a part of the original contract. These alterations that are for work within the general scope of the contract shall be covered by ``Change Orders" issued by the Engineer. Change orders for altered work shall include extensions of contract time where, in the Engineer's opinion, such extensions are commensurate with the amount and difficulty of added work.

Should the aggregate amount of altered work exceed the 25 percent limitation hereinbefore specified, such excess altered work shall be covered by supplemental agreement. If the owner and the Contractor are unable to agree on a unit adjustment for any contract item that requires a supplemental agreement, the owner reserves the right to terminate the contract with respect to the item and make other arrangements for its completion.

* * * *

When determined by the Engineer to be in the Owner's best interest, he may order the Contractor to proceed with Extra Work by force account as provided in the subsection titled PAYMENT FOR EXTRA AND FORCE ACCOUNT WORK of Section 90.

Extra Work that is necessary for acceptable completion of the project, but is not within the general scope of the work covered by the original contract shall be covered by a Supplemental Agreement as hereinbefore defined in the subsection titled SUPPLEMENTAL AGREEMENT of Section 10.

Any claim for payment of Extra Work that is not covered by written agreement (change order or supplemental agreement) shall be rejected by the Owner.

40-05 MAINTENANCE OF TRAFFIC. It is the explicit intention of the contract that the safety of aircraft, as well as the Contractor's equipment and personnel, is the most important consideration. It is understood and agreed that the Contractor shall provide for the free and unobstructed movement of aircraft in the air operations areas of the airport with respect to his/her own operations and the operations of all his/her subcontractors as specified in the subsection titled LIMITATION OF OPERATIONS of Section 80. It is further understood and agreed that the Contractor shall provide for the uninterrupted operation of visual and electronic signals (including power supplies thereto) used in the guidance of aircraft while operating to, from, and upon the airport as specified in the subsection titled CONTRACTOR'S RESPONSIBILITY FOR UTILITY SERVICE AND FACILITIES OF OTHERS in Section 70.

With respect to his/her own operations and the operations of all his/her subcontractors, the Contractor shall provide marking, lighting, and other acceptable means of identifying: personnel; equipment; vehicles; storage areas; and any work area or condition that may be hazardous to the operation of aircraft, fire-rescue equipment, or maintenance vehicles at the airport.

When the contract requires the maintenance of vehicular traffic on an existing road, street, or highway during the Contractor's performance of work that is otherwise provided for in the contract, plans, and specifications, the Contractor shall keep such road, street, or highway open to all traffic and shall provide such maintenance as may be required to accommodate traffic. The Contractor shall furnish erect, and maintain barricades, warning signs, flagperson, and other traffic control devices in reasonable conformity with the manual of Uniform Traffic Control Devices for Streets and Highways (published by the United States Government Printing Office), unless otherwise specified herein. The Contractor shall also construct and maintain in a safe condition any temporary connections necessary for ingress to and egress from abutting property or intersecting roads, streets or highways. Unless otherwise specified herein, the Contractor will not be required to furnish snow removal for such existing road, street, or highway.

The Contractor shall make his/her own estimate of all labor, materials, equipment, and incidentals necessary for providing the maintenance of aircraft and vehicular traffic as specified in this subsection.

The cost of maintaining the aircraft and vehicular traffic specified in this subsection shall not be measured or paid for directly, but shall be included in the various contract items.

40-06 REMOVAL OF EXISTING STRUCTURES. All existing structures encountered within the established lines, grades, or grading sections shall be removed by the Contractor, unless such existing structures are otherwise specified to be relocated, adjusted up or down, salvaged, abandoned in place, reused in the work or to remain in place. The cost of removing such existing structures shall not be measured or paid for directly, but shall be included in the various contract items.

Should the Contractor encounter an existing structure (above or below ground) in the work for which the disposition is not indicated on the plans, the Engineer shall be notified prior to disturbing such structure. The disposition of existing structures so encountered shall be immediately determined by the Engineer in accordance with the provisions of the contract.

Except as provided in the subsection titled RIGHTS IN AND USE OF MATERIALS FOUND IN THE WORK of this section, it is intended that all existing materials or structures that may be encountered (within the lines, grades, or grading sections established for completion of the work) shall be utilized in the work as otherwise provided for in the contract and shall remain the property of the Owner when so utilized in the work.

* * * *

40-09 FINAL CLEANING UP. Upon completion of the work and before acceptance and final payment will be made, the Contractor shall remove from the site all machinery, equipment, surplus and discarded materials, rubbish, temporary structures, and stumps or portions of trees. He shall cut all brush and woods within the limits indicated and shall leave the site in a neat and presentable condition. Material cleared from the site and deposited on adjacent property will not be considered as having been disposed of satisfactorily, unless the Contractor has obtained the written permission of such property owner.

END OF SECTION 40

SECTION 50
CONTROL OF WORK

50-01 AUTHORITY OF THE ENGINEER. The Engineer shall decide any and all questions which may arise as to the quality and acceptability of materials furnished, work performed, and as to the manner of performance and rate of progress of the work. The Engineer shall decide all questions that may arise as to the interpretation of the specifications or plans relating to the work. The Engineer shall determine the amount and quality of the several kinds of work performed and materials furnished which are to be paid for the under contract.

The Engineer does not have the authority to accept pavements that do not conform to FAA specification requirements.

50-02 CONFORMITY WITH PLANS AND SPECIFICATIONS. All work and all materials furnished shall be in reasonably close conformity with the lines, grades, grading sections, cross sections, dimensions, material requirements, and testing requirements that are specified (including specified tolerances) in the contract, plans or specifications.

If the Engineer finds the materials furnished, work performed, or the finished product not within reasonably close conformity with the plans and specifications but that the portion of the work affected will, in his/her opinion, result in a finished product having a level of safety, economy, durability, and workmanship acceptable to the Owner, he will advise the Owner of his/her determination that the affected work be accepted and remain in place. In this event, the Engineer will document his/her determination and recommend to the Owner a basis of acceptance that will provide for an adjustment in the contract price for the affected portion of the work. The Engineer's determination and recommended contract price adjustments will be based on good engineering judgment and such tests or retests of the affected work as are, in his/her opinion, needed. Changes in the contract price shall be covered by contract modifications (change order or supplemental agreement) as applicable.

If the Engineer finds the materials furnished, work performed, or the finished product are not in reasonably close conformity with the plans and specifications and have resulted in an unacceptable finished product, the affected work or materials shall be removed and replaced or otherwise corrected by and at the expense of the Contractor in accordance with the Engineer's written orders.

For the purpose of this subsection, the term ``reasonably close conformity" shall not be construed as waiving the Contractor's responsibility to complete the work in accordance with the contract, plans, and specifications. The term shall not be construed as waiving the Engineer's responsibility to insist on strict compliance with the requirements of the contract, plans, and specifications during the Contractor's prosecution of the work, when, in the Engineer's opinion, such compliance is essential to provide an acceptable finished portion of the work.

For the purpose of this subsection, the term ``reasonably close conformity" is also intended to provide the Engineer with the authority, after consultation with the FAA, to use good engineering judgment in his/her determinations as to acceptance of work that is not in strict conformity but will provide a finished product equal to or better than that intended by the requirements of the contract, plans and specifications.

* * * *

The Engineer will not be responsible for the Contractor's means, methods, techniques, sequences, or procedures of construction or the safety precautions incident thereto.

50-03 COORDINATION OF CONTRACT, PLANS, AND SPECIFICATIONS. The contract, plans, specifications, and all referenced standards cited are essential parts of the contract requirements. A requirement occurring in one is as binding as though occurring in all. They are intended to be complementary and to describe and provide for a complete work. In case of discrepancy, calculated dimensions will govern over scaled dimensions; contract technical specifications shall govern over contract general provisions, plans, cited standards for materials or testing, and cited FAA advisory circulars; contract general provisions shall govern over plans, cited standards for materials or testing, and cited FAA advisory circulars; plans shall govern over cited standards for materials or testing and cited FAA advisory circulars. If any paragraphs contained in the Special Provisions conflict with General Provisions or Technical Specifications, the Special Provisions shall govern.

The Contractor shall not take advantage of any apparent error or omission on the plans or specifications. In the event the Contractor discovers any apparent error or discrepancy, he shall immediately call upon the Engineer for his/her interpretation and decision, and such decision shall be final.

LIST SPECIAL PROVISIONS

* * * *

markings, an amount equal to the cost of replacing the same may be deducted from subsequent estimates due the Contractor at the discretion of the Engineer.

The Contractor will be required to furnish all lines, grades and measurements from the control points necessary for the proper prosecution and control of the work contracted for under these specifications.

The Contractor must give weekly copies of the survey notes to the Engineer so that the Engineer may check them as to accuracy and method of staking. All areas that are staked by the Contractor must be checked by the Engineer prior to beginning any work in the area. The Engineer will make periodic checks of the grades and alignment set by the Contractor. In case of error on the part of the Contractor, or his/her employees, resulting in establishing grades and/or alignment that are not in accordance with the plans or established by the Engineer, all construction not in accordance with the established grades and/or alignment shall be replaced without additional cost to the Owner.

No direct payment will be made, unless otherwise specified in contract documents, for this labor, materials, or other expenses therewith. The cost thereof shall be included in the price of the bid for the various items of the Contract.

Construction Staking and Layout includes but is not limited to:

Clearing and Grubbing perimeter staking.
Rough Grade slope stakes at 100-foot stations.
Drainage Swales slope stakes and flow line blue tops at 50-foot stations.
Subgrade blue tops at 25 foot stations and 25 foot offset distance (max.) for the following section locations:
- a. Runway – minimum 5 per station
- b. Taxiways – minimum 3 per station
- c. Holding apron areas – minimum 3 per station
- d. Roadways – minimum 3 per station

Base Course blue tops at 25 foot stations and 25 foot offset distance (max.) for the following section locations:
- a. Runway – minimum 5 per station
- b. Taxiways – minimum 3 per station
- c. Holding apron areas – minimum 3 per station

Pavement areas:
- a. Edge of Pavement hubs and tacks (for stringline by Contractor) at 100 foot stations
- b. Between Lifts at 25 foot stations for the following section locations:
  - (1). Runways – each paving lane width
  - (2). Taxiways – each paving lane width
  - (3). Holding areas – each paving lane width
- c. After finish paving operations at 50 foot stations
  - (1). All paved areas – Edge of each paving lane prior to next paving lot
- d. Shoulder and safety area blue tops at 50 foot stations and at all break points with maximum of 50 foot offsets

Fence lines at 100 foot stations
Electrical and Communications System locations, lines and grades including but not limited to duct runs, connections, fixtures, signs, lights, VASI's, PAPI's, REIL's, Wind Cones, Distance Markers (signs), pull boxes and manholes.
Drain lines, cut stakes and alignment on 25-foot stations, inlet and manholes.
Painting and Striping layout (pinned with 1.5 inch PK nails) marked for paint Contractor. (All nails shall be removed after painting)
Laser, or other automatic control devices, shall be checked with temporary control point or grade hub at a minimum of once per 400 feet per pass (i.e. paving lane).

NOTE: Controls and stakes disturbed or suspect of having been disturbed shall be checked and/or reset as directed by the Engineer without additional cost to the Owner.

50-07 AUTOMATICALLY CONTROLLED EQUIPMENT. Whenever batching or mixing plant equipment is required to be operated automatically under the contract and a breakdown or malfunction of the automatic controls occurs, the equipment may be operated manually or by other methods for a period 48 hours following the

breakdown or malfunction, provided this method of operations will produce results which conform to all other requirements of the contract.

50-08 AUTHORITY AND DUTIES OF INSPECTORS. Inspectors employed by the Owner shall be authorized to inspect all work done and all material furnished. Such inspection may extend to all or any part of the work and to the preparation, fabrication, or manufacture of the materials to be used. Inspectors are not authorized to revoke, alter, or waive any provision of the contract. Inspectors are not authorized to issue instructions contrary to the plans and specifications or to act as foreman for the Contractor.

Inspectors employed by the Owner are authorized to notify the Contractor or his/her representatives of any failure of the work or materials to conform to the requirements of the contract, plans, or specifications and to reject such nonconforming materials in question until such issues can be referred to the Engineer for his/her decision.

50-09 INSPECTION OF THE WORK. All materials and each part or detail of the work shall be subject to inspection by the Engineer. The Engineer shall be allowed access to all parts of the work and shall be furnished with such information and assistance by the Contractor as is required to make a complete and detailed inspection.

If the Engineer requests it, the Contractor, at any time before acceptance of the work, shall remove or uncover such portions of the finished work as may be directed. After examination, the Contractor shall restore said portions of the work to the standard required by the specifications. Should the work thus exposed or examined prove acceptable, the uncovering, or removing, and the replacing of the covering or making good of the parts removed will be paid for as extra work; but should the work so exposed or examined prove unacceptable, the uncovering, or removing, and the replacing of the covering or making good of the parts removed will be at the Contractor's expense.

Any work done or materials used without supervision or inspection by an authorized representative of the Owner may be ordered removed and replaced at the Contractor's expense unless the Owner's representative failed to inspect after having been given reasonable notice in writing that the work was to be performed.

Should the contract work include relocation, adjustment, or any other modification to existing facilities, not the property of the (contract) Owner, authorized representatives of the owners of such facilities shall have the right to inspect such work. Such inspection shall in no sense make any facility owner a party to the contract, and shall in no way interfere with the rights of the parties to this contract.

50-10 REMOVAL OF UNACCEPTABLE AND UNAUTHORIZED WORK. All work that does not conform to the requirements of the contract, plans, and specifications will be considered unacceptable, unless otherwise determined acceptable by the Engineer as provided in the subsection titled CONFORMITY WITH PLANS AND SPECIFICATIONS of this section.

Unacceptable work, whether the result of poor workmanship, use of defective materials, damage through carelessness, or any other cause found to exist prior to the final acceptance of the work, shall be removed immediately and replaced in an acceptable manner in accordance with the provisions of the subsection titled CONTRACTOR'S RESPONSIBILITY FOR WORK of Section 70.

No removal work made under provision of this subsection shall be done without lines and grades having been given by the Engineer. Work done contrary to the instructions of the Engineer, work done beyond the lines shown on the plans or as given, except as herein specified, or any extra work done without authority, will be considered as unauthorized and will not be paid for under the provisions of the contract. Work so done may be ordered removed or replaced at the Contractor's expense.

Upon failure on the part of the Contractor to comply forthwith with any order of the Engineer made under the provisions of this subsection, the Engineer will have authority to cause unacceptable work to be remedied or removed and replaced and unauthorized work to be removed and to deduct the costs (incurred by the Owner) from any monies due or to become due the Contractor.

50-11 LOAD RESTRICTIONS. The Contractor shall comply with all legal load restrictions in the hauling of materials on public roads beyond the limits of the work. A special permit will not relieve the Contractor of liability for damage that may result from the moving of material or equipment.

The operation of equipment of such weight or so loaded as to cause damage to structures or to any other type of construction will not be permitted. Hauling of materials over the base course or surface course under construction shall be limited as directed. No loads will be permitted on a concrete pavement, base, or structure before the expiration of the curing period. The Contractor shall be responsible for all damage done by his/her hauling equipment and shall correct such damage at his/her own expense.

* * * *

If, however, the inspection discloses any work, in whole or in part, as being unsatisfactory, the Engineer will give the Contractor the necessary instructions for correction of same and the Contractor shall immediately comply with and execute such instructions. Upon correction of the work, another inspection will be made which shall constitute the final inspection, provided the work has been satisfactorily completed. In such event, the Engineer will make the final acceptance and notify the Contractor in writing of this acceptance as of the date of final inspection.

50-16 CLAIMS FOR ADJUSTMENT AND DISPUTES. If for any reason the Contractor deems that additional compensation is due him for work or materials not clearly provided for in the contract, plans, or specifications or previously authorized as extra work, he shall notify the Engineer in writing of his/her intention to claim such additional compensation before he begins the work on which he bases the claim. If such notification is not given or the Engineer is not afforded proper opportunity by the Contractor for keeping strict account of actual cost as required, then the Contractor hereby agrees to waive any claim for such additional compensation. Such notice by the Contractor and the fact that the Engineer has kept account of the cost of the work shall not in any way be construed as proving or substantiating the validity of the claim. When the work on which the claim for additional compensation is based has been completed, the Contractor shall, within l0 calendar days, submit his/her written claim to the Engineer who will present it to the Owner for consideration in accordance with local laws or ordinances.

Nothing in this subsection shall be construed as a waiver of the Contractor's right to dispute final payment based on differences in measurements or computations.

50-17 COST REDUCTION INCENTIVE. The provisions of this subsection will apply only to contracts awarded to the lowest bidder pursuant to competitive bidding.

On projects with original contract amounts in excess of $100,000, the Contractor may submit to the Engineer, in writing, proposals for modifying the plans, specifications or other requirements of the contract for the sole purpose of reducing the cost of construction. The cost reduction proposal shall not impair, in any manner, the essential functions or characteristics of the project, including but not limited to service life, economy of operation, ease of maintenance, desired appearance, design and safety standards. This provision shall not apply unless the proposal submitted is specifically identified by the Contractor as being presented for consideration as a value engineering proposal.

Not eligible for cost reduction proposals are changes in the basic design of a pavement type, runway and taxiway lighting, visual aids, hydraulic capacity of drainage facilities, or changes in grade or alignment that reduce the geometric standards of the project.

As a minimum, the following information shall be submitted by the Contractor with each proposal:

a. A description of both existing contract requirements for performing the work and the proposed changes, with a discussion of the comparative advantages and disadvantages of each;

b. An itemization of the contract requirements that must be changed if the proposal is adopted;

c. A detailed estimate of the cost of performing the work under the existing contract and under the proposed changes;

d. A statement of the time by which a change order adopting the proposal must be issued;

e. A statement of the effect adoption of the proposal will have on the time for completion of the contract; and

f. The contract items of work affected by the proposed changes, including any quantity variation attributable to them.

The Contractor may withdraw, in whole or in part, any cost reduction proposal not accepted by the Engineer, within the period specified in the proposal. The provisions of this subsection shall not be construed to require the Engineer to consider any cost reduction proposal that may be submitted.

The Contractor shall continue to perform the work in accordance with the requirements of the contract until a change order incorporating the cost reduction proposal has been issued. If a change order has not been issued by the date upon which the Contractor's cost reduction proposal specifies that a decision should be made, or such other date as the Contractor may subsequently have requested in writing, such cost reduction proposal shall be deemed rejected.

The Engineer shall be the sole judge of the acceptability of a cost reduction proposal and of the estimated net savings from the adoption of all or any part of such proposal. In determining the estimated net savings, the Engineer may disregard the contract bid prices if, in the Engineer's judgment such prices do not represent a fair measure of the value of the work to be performed or deleted.

The Owner may require the Contractor to share in the Owner's costs of investigating a cost reduction proposal submitted by the Contractor as a condition of considering such proposal. Where such a condition is imposed, the Contractor shall acknowledge acceptance of it in writing. Such acceptance shall constitute full authority for the Owner to deduct the cost of investigating a cost reduction proposal from amounts payable to the Contractor under the contract.

If the Contractor's cost reduction proposal is accepted in whole or in part, such acceptance will be by a contract change order that shall specifically state that it is executed pursuant to this subsection. Such change order shall incorporate the changes in the plans and specifications which are necessary to permit the cost reduction proposal or such part of it as has been accepted and shall include any conditions upon which the Engineer's approval is based. The change order shall also set forth the estimated net savings attributable to the cost reduction proposal. The net savings shall be determined as the difference in costs between the original contract costs for the involved work items and the costs occurring as a result of the proposed change. The change order shall also establish the net savings agreed upon and shall provide for adjustment in the contract price that will divide the net savings equally between the Contractor and the Owner.

The Contractor's 50 percent share of the net savings shall constitute full compensation to the Contractor for the cost reduction proposal and the performance of the work.

Acceptance of the cost-reduction proposal and performance of the cost-reduction work shall not extend the time of completion of the contract unless specifically provided for in the contract change order.

* * * *

Intentionally Left Blank

SECTION 60
CONTROL OF MATERIALS

60-01 SOURCE OF SUPPLY AND QUALITY REQUIREMENTS. The materials used on the work shall conform to the requirements of the contract, plans, and specifications. Unless otherwise specified, such materials that are manufactured or processed shall be new (as compared to used or reprocessed).

In order to expedite the inspection and testing of materials, the Contractor shall furnish complete statements to the Engineer as to the origin, composition, and manufacture of all materials to be used in the work. Such statements shall be furnished promptly after execution of the contract but, in all cases, prior to delivery of such materials.

At the Engineer's option, materials may be approved at the source of supply before delivery is stated. If it is found after trial that sources of supply for previously approved materials do not produce specified products, the Contractor shall furnish materials from other sources.

The Contractor shall furnish airport lighting equipment that conforms to the requirements of cited materials specifications. In addition, where an FAA specification for airport lighting equipment is cited in the plans or specifications, the Contractor shall furnish such equipment that is:

a. Listed in FAA Advisory Circular (AC) 150/5345-53, Airport Lighting Equipment Certification Program, that is in effect on the date of advertisement; and,

b. Produced by the manufacturer qualified (by FAA) to produce such specified and listed equipment.

The following airport lighting equipment is required for this contract and is to be furnished by the Contractor in accordance with the requirements of this subsection:

EQUIPMENT NAME
CITED FAA SPECIFICATIONS
EFFECTIVE FAA AC OR APPROVAL LETTER FOR EQUIPMENT AND
MANUFACTURER

* * * *

The Contractor shall employ a testing organization to perform all Contractor required tests. The Contractor shall submit to the Engineer resumes on all testing organizations and individual persons who will be performing the tests. The Engineer will determine if such persons are qualified. All the test data shall be reported to the Engineer after the results are known. A legible, handwritten copy of all test data shall be given to the Engineer daily, along with printed reports, in an approved format, on a weekly basis. After completion of the project, and prior to final payment, the Contractor shall submit a final report to the Engineer showing all test data reports, plus an analysis of all results showing ranges, averages, and corrective action taken on all failing tests.

* * * *

Should the Engineer conduct plant inspections, the following conditions shall exist:

a. The Engineer shall have the cooperation and assistance of the Contractor and the producer with whom he has contracted for materials.

b. The Engineer shall have full entry at all reasonable times to such parts of the plant that concern the manufacture or production of the materials being furnished.

c. If required by the Engineer, the Contractor shall arrange for adequate office or working space that may be reasonably needed for conducting plant inspections. Office or working space should be conveniently located with respect to the plant.

It is understood and agreed that the Owner shall have the right to retest any material that has been tested and approved at the source of supply after it has been delivered to the site. The Engineer shall have the right to reject only material which, when retested, does not meet the requirements of the contract, plans, or specifications.

60-05 ENGINEER'S FIELD OFFICE. The Contractor shall furnish for the duration of the project one building for the use of the field engineers and inspectors, as a field office. This facility shall be an approved weatherproof building meeting the current State Highway Specifications (for example, Class I Field Office or Type C Structure). This building shall be located conveniently near to the construction and shall be separate from any building used by the Contractor. A land line telephone and answering machine shall be provided. The Contractor shall be responsible for payment of the basic monthly charge and local calls only. Any Long Distance Tolls shall be the responsibility of the caller. The Contractor shall furnish [FAX machine, photocopy machine, water, sanitary facilities, heat, air conditioning, and electricity]. No direct payment will be made for this building or labor, materials, ground rental, or other expense in connection therewith. The cost hereof shall be included in the price bid for the various items of the contract. The Contractor and his/her superintendent shall provide all reasonable facilities to enable to the Engineer to inspect the workmanship and materials entering into the work.

* * * *

Rejected material or assembly, the defects of which have been corrected by the Contractor, shall not be returned to the site of the work until such time as the Engineer has approved its used in the work.

60-08 OWNER FURNISHED MATERIALS. The Contractor shall furnish all materials required to complete the work, except those specified herein (if any) to be furnished by the Owner. Owner-furnished materials shall be made available to the Contractor at the location specified herein.

All costs of handling, transportation from the specified location to the site of work, storage, and installing Owner-furnished materials shall be included in the unit price bid for the contract item in which such Owner-furnished material is used.

After any Owner-furnished material has been delivered to the location specified, the Contractor shall be responsible for any demurrage, damage, loss, or other deficiencies that may occur during the Contractor's handling, storage, or use of such Owner-furnished material. The Owner will deduct from any monies due or to become due the Contractor any cost incurred by the Owner in making good such loss due to the Contractor's handling, storage, or use of Owner-furnished materials.

END OF SECTION 60

SECTION 70
LEGAL REGULATIONS AND RESPONSIBILITY TO PUBLIC

70-01 LAWS TO BE OBSERVED. The Contractor shall keep fully informed of all Federal and state laws, all local laws, ordinances, and regulations and all orders and decrees of bodies or tribunals having any jurisdiction or authority, which in any manner affect those engaged or employed on the work, or which in any way affect the conduct of the work. He shall at all times observe and comply with all such laws, ordinances, regulations, orders, and decrees; and shall protect and indemnify the Owner and all his/her officers, agents, or servants against any claim or liability arising from or based on the violation of any such law, ordinance, regulation, order, or decree, whether by himself or his/her employees.

70-02 PERMITS, LICENSES, AND TAXES. The Contractor shall procure all permits and licenses, pay all charges, fees, and taxes, and give all notices necessary and incidental to the due and lawful prosecution of the work.

70-03 PATENTED DEVICES, MATERIALS, AND PROCESSES. If the Contractor is required or desires to use any design, device, material, or process covered by letters of patent or copyright, he shall provide for such use by suitable legal agreement with the patentee or owner. The Contractor and the surety shall indemnify and save harmless the Owner, any third party, or political subdivision from any and all claims for infringement by reason of the use of any such patented design, device, material or process, or any trademark or copyright, and shall indemnify the Owner for any costs, expenses, and damages which it may be obliged to pay by reason of an infringement, at any time during the prosecution or after the completion of the work.

70-04 RESTORATION OF SURFACES DISTURBED BY OTHERS. The Owner reserves the right to authorize the construction, reconstruction, or maintenance of any public or private utility service, FAA or National Oceanic and Atmospheric Administration (NOAA) facility, or a utility service of another government agency at any time during the progress of the work. To the extent that such construction, reconstruction, or maintenance has been coordinated with the Owner, such authorized work (by others) is indicated as follows:

Owner (Utility or Other Facility)
Location (See Plan Sheet No.)
Person to Contact (Name, Title, Address and Phone)

Except as listed above, the Contractor shall not permit any individual, firm, or corporation to excavate or otherwise disturb such utility services or facilities located within the limits of the work without the written permission of the Engineer.

Should the owner of public or private utility service, FAA, or NOAA facility, or a utility service of another government agency be authorized to construct, reconstruct, or maintain such utility service or facility during the progress of the work, the Contractor shall cooperate with such owners by arranging and performing the work in this contract so as to facilitate such construction, reconstruction or maintenance by others whether or not such work by others is listed above. When ordered as extra work by the Engineer, the Contractor shall make all necessary repairs to the work which are due to such authorized work by others, unless otherwise provided for in the contract, plans, or specifications. It is understood and agreed that the Contractor shall not be entitled to make any claim for damages due to such authorized work by others or for any delay to the work resulting from such authorized work.

* * * *

subsection and provided for in the contract, plans and specifications. In addition, all known utility services or facilities that are within the limits of the proposed work should be shown on the plans (regardless of whether or not there is a conflict of work to be performed by the owner) with enough detailed information to indicate the lack of conflicts.

* * * *

emergency fire-rescue or maintenance vehicles on the airport in reasonable conformance to AC 150/5370-2, Operational Safety on Airports During Construction.

The Contractor shall identify each motorized vehicle or piece of construction equipment in reasonable conformance to AC 150/5370-2.

The Contractor shall furnish and erect all barricades, warning signs, and markings for hazards prior to commencing work that requires such erection and shall maintain the barricades, warning signs, and markings for hazards until their dismantling is directed by the Engineer.

Open-flame type lights shall not be permitted within the air operations areas of the airport.

* * * *

operations of the Contractor; or on account of or in consequence of any neglect in safeguarding the work; or through use of unacceptable materials in constructing the work; or because of any act or omission, neglect, or misconduct of said Contractor; or because of any claims or amounts recovered from any infringements of patent, trademark, or copyright; or from any claims or amounts arising or recovered under the ``Workmen's Compensation Act," or any other law, ordinance, order, or decree. Money due the Contractor under and by virtue of his/her contract as may be considered necessary by the Owner for such purpose may be retained for the use of the Owner or, in case no money is due, his/her surety may be held until such suit(s), action(s), or claim(s) for injuries or damages as aforesaid shall have been settled and suitable evidence to that effect furnished to the Owner, except that money due the Contractor will not be withheld when the Contractor produces satisfactory evidence that he is adequately protected by public liability and property damage insurance.

70-12 THIRD PARTY BENEFICIARY CLAUSE. It is specifically agreed between the parties executing the contract that it is not intended by any of the provisions of any part of the contract to create the public or any member thereof a third party beneficiary or to authorize anyone not a party to the contract to maintain a suit for personal injuries or property damage pursuant to the terms or provisions of the contract.

70-13 OPENING SECTIONS OF THE WORK TO TRAFFIC. Should it be necessary for the Contractor to complete portions of the contract work for the beneficial occupancy of the Owner prior to completion of the entire contract, such ``phasing" of the work shall be specified herein and indicated on the plans. When so specified, the Contractor shall complete such portions of the work on or before the date specified or as otherwise specified. The Contractor shall make his/her own estimate of the difficulties involved in arranging his/her work to permit such beneficial occupancy by the Owner as described below:

Phase or Description
Required Date or Sequence of Owner's Beneficial Occupancy
Work Shown on Plan Sheet

* * * *

Contractor shall be required to conform to safety standards contained AC 150/5370-2, Operational Safety on Airports During Construction (See Special Provisions.)

Contractor shall refer to the approved safety plan to identify barricade requirements and other safety requirements prior to opening up sections of work to traffic.

70-14 CONTRACTOR'S RESPONSIBILITY FOR WORK. Until the Engineer's final written acceptance of the entire completed work, excepting only those portions of the work accepted in accordance with the subsection titled PARTIAL ACCEPTANCE of Section 50, the Contractor shall have the charge and care thereof and shall take every precaution against injury or damage to any part due to the action of the elements or from any other cause, whether arising from the execution or from the non-execution of the work. The Contractor shall rebuild, repair, restore, and make good all injuries or damages to any portion of the work occasioned by any of the above causes before final acceptance and shall bear the expense thereof except damage to the work due to unforeseeable causes beyond the control of and without the fault or negligence of the Contractor, including but not restricted to acts of God such as earthquake, tidal wave, tornado, hurricane or other cataclysmic phenomenon of nature, or acts of the public enemy or of government authorities.

If the work is suspended for any cause whatever, the Contractor shall be responsible for the work and shall take such precautions necessary to prevent damage to the work. The Contractor shall provide for normal drainage and shall erect necessary temporary structures, signs, or other facilities at his/her expense. During such period of suspension of work, the Contractor shall properly and continuously maintain in an acceptable growing condition all living material in newly established planting, seedings, and soddings furnished under his/her contract, and shall take adequate precautions to protect new tree growth and other important vegetative growth against injury.

70-15 CONTRACTOR'S RESPONSIBILITY FOR UTILITY SERVICE AND FACILITIES OF OTHERS. As provided in the subsection titled RESTORATION OF SURFACES DISTURBED BY OTHERS of this section, the Contractor shall cooperate with the owner of any public or private utility service, FAA or NOAA, or a utility service of another government agency that may be authorized by the owner to construct, reconstruct or maintain such utility services or facilities during the progress of the work. In addition, the Contractor shall control his/her operations to prevent the unscheduled interruption of such utility services and facilities.

To the extent that such public or private utility services, FAA, or NOAA facilities, or utility services of another governmental agency are known to exist within the limits of the contract work, the approximate locations have been indicated on the plans and the owners are indicated as follows:

Utility Service or Facility
Person to Contract (Name, Title, Address, & Phone)
Owner's Emergency Contact (Phone)

* * * *

It is understood and agreed that the Owner does not guarantee the accuracy or the completeness of the location information relating to existing utility services, facilities, or structures that may be shown on the plans or encountered in the work. Any inaccuracy or omission in such information shall not relieve the Contractor of his/her responsibility to protect such existing features from damage or unscheduled interruption of service.

It is further understood and agreed that the Contractor shall, upon execution of the contract, notify the owners of all utility services or other facilities of his/her plan of operations. Such notification shall be in writing addressed to THE PERSON TO CONTACT as provided hereinbefore in this subsection and the subsection titled RESTORATION OF SURFACES DISTURBED BY OTHERS of this section. A copy of each notification shall be given to the Engineer.

In addition to the general written notification hereinbefore provided, it shall be the responsibility of the Contractor to keep such individual owners advised of changes in his/her plan of operations that would affect such owners.

Prior to commencing the work in the general vicinity of an existing utility service or facility, the Contractor shall again notify each such owner of his/her plan of operation. If, in the Contractor's opinion, the owner's assistance is needed to locate the utility service or facility or the presence of a representative of the owner is desirable to observe the work, such advice should be included in the notification. Such notification shall be given by the most expeditious means to reach the utility owner's PERSON TO CONTACT no later than two normal business days prior to the Contractor's commencement of operations in such general vicinity. The Contractor shall furnish a written summary of the notification to the Engineer.

The Contractor's failure to give the two day's notice hereinabove provided shall be cause for the Owner to suspend the Contractor's operations in the general vicinity of a utility service or facility.

Where the outside limits of an underground utility service have been located and staked on the ground, the Contractor shall be required to use excavation methods acceptable to the Engineer within 3 feet (90 cm) of such outside limits at such points as may be required to ensure protection from damage due to the Contractor's operations.

Should the Contractor damage or interrupt the operation of a utility service or facility by accident or otherwise, he shall immediately notify the proper authority and the Engineer and shall take all reasonable measures to prevent further damage or interruption of service. The Contractor, in such events, shall cooperate with the utility service or facility owner and the Engineer continuously until such damage has been repaired and service restored to the satisfaction of the utility or facility owner.

The Contractor shall bear all costs of damage and restoration of service to any utility service or facility due to his/her operations whether or not due to negligence or accident. The Owner reserves the right to deduct such costs from any monies due or which may become due the Contractor, or his/her surety.

70-15.1 FAA FACILITIES AND CABLE RUNS. The Contractor is hereby advised that the construction limits of the project include existing facilities and buried cable runs that are owned, operated and maintained by the FAA. The Contractor, during the prosecution of the project work, shall comply with the following:

a. The Contractor shall permit FAA maintenance personnel the right of access to the project work site for purposes of inspecting and maintaining all existing FAA owned facilities.

b. The Contractor shall notify the above named FAA Airway Facilities Point-of-Contact seven (7) calendar days prior to commencement of construction activities in order to permit sufficient time to locate and mark existing buried cables and to schedule any required facility outages.

c. If prosecution of the project work requires a facility outage, the Contractor shall contact the above named FAA Point-of-Contact a minimum of 48 hours prior to the time of the required outage.

d. If prosecution of the project work results in damages to existing FAA equipment or cables, the Contractor shall repair the damaged item in conformance with FAA Airway Facilities' standards to the satisfaction of the above named FAA Point-of-Contact.

e. If the project work requires the cutting or splicing of FAA owned cables, the above named FAA Point-of-Contact shall be contacted a minimum of 48 hours prior to the time the cable work commences. The FAA reserves the right to have a FAA Airway Facilities representative on site to observe the splicing of the cables as a condition of acceptance. All cable splices are to be accomplished in accordance with FAA Airway Facilities' specifications and require approval by the above named FAA Point-of-Contact as a condition of acceptance by the Owner. The Contractor is hereby advised that FAA Airway Facilities restricts the location of where splices may be installed. If a cable splice is required in a location that is not permitted by FAA Airway Facilities, the Contractor shall furnish and install a sufficient length of new cable that eliminates the need for any splice.

* * * *

The Engineer will immediately investigate the Contractor's finding and the Owner will direct the Contractor to either resume his/her operations or to suspend operations as directed.

Should the Owner order suspension of the Contractor's operations in order to protect an archaeological or historical finding, or order the Contractor to perform extra work, such shall be covered by an appropriate contract modification (change order or supplemental agreement) as provided in the subsection titled EXTRA WORK of Section 40 and the subsection titled PAYMENT FOR EXTRA WORK AND FORCE ACCOUNT WORK of Section 90. If appropriate, the contract modification shall include an extension of contract time in accordance with the subsection titled DETERMINATION AND EXTENSION OF CONTRACT TIME of Section 80.

* * * *

SECTION 80
PROSECUTION AND PROGRESS

80-01 SUBLETTING OF CONTRACT. The Owner will not recognize any subcontractor on the work. The Contractor shall at all times when work is in progress be represented either in person, by a qualified superintendent, or by other designated, qualified representative who is duly authorized to receive and execute orders of the Engineer.

Should the Contractor elect to assign his/her contract, said assignment shall be concurred in by the surety, shall be presented for the consideration and approval of the Owner, and shall be consummated only on the written approval of the Owner. In case of approval, the Contractor shall file copies of all subcontracts with the Engineer.

The Contractor shall perform, with his organization, an amount of work equal to at least [ ] percent of the total contract cost.

* * * *

When the work requires the Contractor to conduct his/her operations within an AIR OPERATIONS AREA of the airport, the work shall be coordinated with airport operations (through the Engineer) at least 48 hours prior to commencement of such work. The Contractor shall not close an AIR OPERATIONS AREA until so authorized by the Engineer and until the necessary temporary marking and associated lighting is in place as provided in the subsection titled BARRICADES, WARNING SIGNS, AND HAZARD MARKINGS of Section 70.

When the contract work requires the Contractor to work within an AIR OPERATIONS AREA (AOA) of the airport on an intermittent basis (intermittent opening and closing of the AIR OPERATIONS AREA), the Contractor shall maintain constant communications as hereinafter specified; immediately obey all instructions to vacate the AIR OPERATIONS AREA; immediately obey all instructions to resume work in such AIR OPERATIONS AREA. Failure to maintain the specified communications or to obey instructions shall be cause for suspension of the Contractor's operations in the AIR OPERATIONS AREA until the satisfactory conditions are provided. The following AIR OPERATIONS AREA cannot be closed to operating aircraft to permit the Contractor's operations on a continuous basis and will therefore be closed to aircraft operations intermittently as follows:

AOA
TIME PERIODS AOA CAN BE CLOSED
TYPE OF COMMUNICATIONS REQUIRED WHEN WORKING IN AN AOA
CONTROL AUTHORITY

* * * *

80-05 CHARACTER OF WORKERS, METHODS, AND EQUIPMENT. The Contractor shall, at all times, employ sufficient labor and equipment for prosecuting the work to full completion in the manner and time required by the contract, plans, and specifications.

All workers shall have sufficient skill and experience to perform properly the work assigned to them. Workers engaged in special work or skilled work shall have sufficient experience in such work and in the operation of the equipment required to perform the work satisfactorily.

Any person employed by the Contractor or by any subcontractor who violates any operational regulations and, in the opinion of the Engineer, does not perform his work in a proper and skillful manner or is intemperate or disorderly shall, at the written request of the Engineer, be removed forthwith by the Contractor or subcontractor employing such person, and shall not be employed again in any portion of the work without approval of the Engineer.

Should the Contractor fail to remove such persons or person, or fail to furnish suitable and sufficient personnel for the proper prosecution of the work, the Engineer may suspend the work by written notice until compliance with such orders.

All equipment that is proposed to be used on the work shall be of sufficient size and in such mechanical condition as to met requirements of the work and to produce a satisfactory quality of work. Equipment used on any portion of the work shall be such that no injury to previously completed work, adjacent property, or existing airport facilities will result from its use.

When the methods and equipment to be used by the Contractor in accomplishing the work are not prescribed in the contract, the Contractor is free to use any methods or equipment that will accomplish the work in conformity with the requirements of the contract, plans, and specifications.

When the contract specifies the use of certain methods and equipment, such methods and equipment shall be used unless others are authorized by the Engineer. If the Contractor desires to use a method or type of equipment other than specified in the contract, he may request authority from the Engineer to do so. The request shall be in writing and shall include a full description of the methods and equipment proposed and of the reasons for desiring to make the change. If approval is given, it will be on the condition that the Contractor will be fully responsible for producing work in conformity with contract requirements. If, after trial use of the substituted methods or equipment, the Engineer determines that the work produced does not meet contract requirements, the Contractor shall discontinue the use of the substitute method or equipment and shall complete the remaining work with the specified methods and equipment. The Contractor shall remove any deficient work and replace it with work of specified quality, or take such other corrective action as the Engineer may direct. No change will be made in basis of payment for the contract items involved nor in contract time as a result of authorizing a change in methods or equipment under this subsection.

80-06 TEMPORARY SUSPENSION OF THE WORK. The Owner shall have the authority to suspend the work wholly, or in part, for such period or periods as he may deem necessary, due to unsuitable weather, or such other conditions as are considered unfavorable for the prosecution of the work, or for such time as is necessary due to the failure on the part of the Contractor to carry out orders given or perform any or all provisions of the contract.

In the event that the Contractor is ordered by the Owner, in writing, to suspend work for some unforeseen cause not otherwise provided for in the contract and over which the Contractor has no control, the Contractor may be reimbursed for actual money expended on the work during the period of shutdown. No allowance will be made for anticipated profits. The period of shutdown shall be computed from the effective date of the Engineer's order to suspend work to the effective date of the Engineer's order to resume the work. Claims for such compensation shall be filed with the Engineer within the time period stated in the Engineer's order to resume work. The Contractor shall submit with his/her claim information substantiating the amount shown on the claim. The Engineer will forward the Contractor's claim to the Owner for consideration in accordance with local laws or ordinances. No provision of this article shall be construed as entitling the Contractor to compensation for delays due to inclement weather, for suspensions made at the request of the Owner, or for any other delay provided for in the contract, plans, or specifications.

If it should become necessary to suspend work for an indefinite period, the Contractor shall store all materials in such manner that they will not become an obstruction nor become damaged in any way. He shall take every precaution to prevent damage or deterioration of the work performed and provide for normal drainage of the work. The Contractor shall erect temporary structures where necessary to provide for traffic on, to, or from the airport.

80-07 DETERMINATION AND EXTENSION OF CONTRACT TIME. The number of calendar or working days allowed for completion of the work shall be stated in the proposal and contract and shall be known as the CONTRACT TIME.

Should the contract time require extension for reasons beyond the Contractor's control, it shall be adjusted as follows:

a. CONTRACT TIME based on WORKING DAYS shall be calculated weekly by the Engineer. The Engineer will furnish the Contractor a copy of his/her weekly statement of the number of working days charged against the contract time during the week and the number of working days currently specified for completion of the contract (the original contract time plus the number of working days, if any, that have been included in approved CHANGE ORDERS or SUPPLEMENTAL AGREEMENTS covering EXTRA WORK).

The Engineer shall base his/her weekly statement of contract time charged on the following considerations:

(1) No time shall be charged for days on which the Contractor is unable to proceed with the principal item of work under construction at the time for at least 6 hours with the normal work force employed on such principal item. Should the normal work force be on a double-shift, 12 hours shall be used. Should the normal work force be on a triple-shift, 18 hours shall apply. Conditions beyond the Contractor's control such as strikes, lockouts, unusual delays in transportation, temporary suspension of the principal item of work under construction or temporary suspension of the entire work which have been ordered by the Owner for reasons not the fault of the Contractor, shall not be charged against the contract time.

(2) The Engineer will not make charges against the contract time prior to the effective date of the notice to proceed.

(3) The Engineer will begin charges against the contract time on the first working day after the effective date of the notice to proceed.

(4) The Engineer will not make charges against the contract time after the date of final acceptance as defined in the subsection titled FINAL ACCEPTANCE of Section 50.

(5) The Contractor will be allowed 1 week in which to file a written protest setting forth his/her objections to the Engineer's weekly statement. If no objection is filed within such specified time, the weekly statement shall be considered as acceptable to the Contractor.

The contract time (stated in the proposal) is based on the originally estimated quantities as described in the subsection titled INTERPRETATION OF ESTIMATED PROPOSAL QUANTITIES of Section 20. Should the satisfactory completion of the contract require performance of work in greater quantities than those estimated in the proposal, the contract time shall be increased in the same proportion as the cost of the actually completed quantities bears to the cost of the originally estimated quantities in the proposal. Such increase in contract time shall not consider either the cost of work or the extension of contract time that has been covered by change order or supplemental agreement and shall be made at the time of final payment.

b. CONTRACT TIME based on CALENDAR DAYS shall consist of the number of calendar days stated in the contract counting from the effective date of the notice to proceed and including all Saturdays, Sundays, holidays, and nonwork days. All calendar days elapsing between the effective dates of the Owner's orders to suspend and resume all work, due to causes not the fault of the Contractor, shall be excluded.

At the time of final payment, the contract time shall be increased in the same proportion as the cost of the actually completed quantities bears to the cost of the originally estimated quantities in the proposal. Such increase in the

contract time shall not consider either cost of work or the extension of contract time that has been covered by a change order or supplemental agreement. Charges against the contract time will cease as of the date of final acceptance.

c. When the contract time is a specified completion date, it shall be the date on which all contract work shall be substantially completed.

If the Contractor finds it impossible for reasons beyond his/her control to complete the work within the contract time as specified, or as extended in accordance with the provisions of this subsection, he may, at any time prior to the expiration of the contract time as extended, make a written request to the Engineer for an extension of time setting forth the reasons which he believes will justify the granting of his/her request. Requests for extension of time on calendar day projects, caused by inclement weather, shall be supported with National Weather Bureau data showing the actual amount of inclement weather exceeded which could normally be expected during the contract period. The Contractor's plea that insufficient time was specified is not a valid reason for extension of time. If the Engineer finds that the work was delayed because of conditions beyond the control and without the fault of the Contractor, he may extend the time for completion in such amount as the conditions justify. The extended time for completion shall then be in full force and effect, the same as though it were the original time for completion.

80-08 FAILURE TO COMPLETE ON TIME. For each calendar day or working day, as specified in the contract, that any work remains uncompleted after the contract time (including all extensions and adjustments as provided in the subsection titled DETERMINATION AND EXTENSION OF CONTRACT TIME of this Section) the sum specified in the contract and proposal as liquidated damages will be deducted from any money due or to become due the Contractor or his/her surety. Such deducted sums shall not be deducted as a penalty but shall be considered as liquidation of a reasonable portion of damages including but not limited to additional engineering services that will be incurred by the Owner should the Contractor fail to complete the work in the time provided in his/her contract.

SCHEDULE	LIQUIDATED DAMAGES COST	ALLOWED CONSTRUCTION TIME

* * * *

AC 150/5300-9, Predesign, Prebid, and Preconstruction Conferences for Airport Grant Projects.

The amount of liquidated damages to be specified should be tailored to each contract and should be based on the cost per day incurred by the Owner should the Contractor overrun the contract time. For large airports (where the impact on airport operations may be great), it is not practical for the Owner to attempt to recover all loss of revenue through liquidated damages. Consequently, the amount of liquidated damages specified must be balanced somewhere between the cost per day incurred for a time overrun and the cost that bidders would have to add to their bids to cover the contingency of a time overrun.

Generally speaking, contract time is based on working days when completion is not critical to operation of the airport. As the impact on airport operations increases, the use of calendar days will give more control. Use of a specified completion date should be used only in cases where the construction operations require long-range rescheduling of airport operations. Also, generally speaking, the amount of liquidated damages would be greater for a calendar day contract than for a working day contract and would be greatest for a specified completion date contract.

* * * *

methods as in the opinion of the Engineer will be required for the completion of said contract in an acceptable manner.

All costs and charges incurred by the Owner, together with the cost of completing the work under contract, will be deducted from any monies due or which may become due the Contractor. If such expense exceeds the sum which would have been payable under the contract, then the Contractor and the surety shall be liable and shall pay to the Owner the amount of such excess.

80-10 TERMINATION FOR NATIONAL EMERGENCIES. The Owner shall terminate the contract or portion thereof by written notice when the Contractor is prevented from proceeding with the construction contract as a direct result of an Executive Order of the President with respect to the prosecution of war or in the interest of national defense.

When the contract, or any portion thereof, is terminated before completion of all items of work in the contract, payment will be made for the actual number of units or items of work completed at the contract price or as mutually agreed for items of work partially completed or not started. No claims or loss of anticipated profits shall be considered.

Reimbursement for organization of the work, and other overhead expenses, (when not otherwise included in the contract) and moving equipment and materials to and from the job will be considered, the intent being that an equitable settlement will be made with the Contractor.

Acceptable materials, obtained or ordered by the Contractor for the work and that are not incorporated in the work shall, at the option of the Contractor, be purchased from the Contractor at actual cost as shown by receipted bills and actual cost records at such points of delivery as may be designated by the Engineer.

Termination of the contract or a portion thereof shall neither relieve the Contractor of his/her responsibilities for the completed work nor shall it relieve his/her surety of its obligation for and concerning any just claim arising out of the work performed.

80-11 WORK AREA, STORAGE AREA AND SEQUENCE OF OPERATIONS. The Contractor shall obtain approval from the Engineer prior to beginning any work in all areas of the airport. No operating runway, taxiway, or Air Operations Area (AOA) shall be crossed, entered, or obstructed while it is operational. The Contractor shall plan and coordinate his/her work in such a manner as to insure safety and a minimum of hindrance to flight operations. All Contractor equipment and material stockpiles shall be stored a minimum or [ ] feet from the centerline of an active runway. No equipment will be allowed to park within the approach area of an active runway at any time. No equipment shall be within [ ] feet of an active runway at any time.

END OF SECTION 80

Intentionally Left Blank

SECTION 90
MEASUREMENT AND PAYMENT

90-01 MEASUREMENT OF QUANTITIES. All work completed under the contract will be measured by the Engineer, or his/her authorized representatives, using United States Customary Units of Measurement or the International System of Units.

The method of measurement and computations to be used in determination of quantities of material furnished and of work performed under the contract will be those methods generally recognized as conforming to good engineering practice.

Unless otherwise specified, longitudinal measurements for area computations will be made horizontally, and no deductions will be made for individual fixtures (or leave-outs) having an area of 9 square feet (0.8 square meter) or less. Unless otherwise specified, transverse measurements for area computations will be the neat dimensions shown on the plans or ordered in writing by the Engineer.

Structures will be measured according to neat lines shown on the plans or as altered to fit field conditions.

Unless otherwise specified, all contract items which are measured by the linear foot such as electrical ducts, conduits, pipe culverts, underdrains, and similar items shall be measured parallel to the base or foundation upon which such items are placed.

In computing volumes of excavation the average end area method or other acceptable methods will be used.

The thickness of plates and galvanized sheet used in the manufacture of corrugated metal pipe, metal plate pipe culverts and arches, and metal cribbing will be specified and measured in decimal fraction of inches.

The term ``ton" will mean the short ton consisting of 2,000 pounds (907 kilograms) avoirdupois. All materials that are measured or proportioned by weights shall be weighed on accurate, approved scales by competent, qualified personnel at locations designed by the Engineer. If material is shipped by rail, the car weight may be accepted provided that only the actual weight of material is paid for. However, car weights will not be acceptable for material to be passed through mixing plants. Trucks used to haul material being paid for by weight shall be weighed empty daily at such times as the Engineer directs, and each truck shall bear a plainly legible identification mark.

Materials to be measured by volume in the hauling vehicle shall be hauled in approved vehicles and measured therein at the point of delivery. Vehicles for this purpose may be of any size or type acceptable to the Engineer, provided that the body is of such shape that the actual contents may be readily and accurately determined. All vehicles shall be loaded to at least their water level capacity, and all loads shall be leveled when the vehicles arrive at the point of delivery.

When requested by the Contractor and approved by the Engineer in writing, material specified to be measured by the cubic yard (cubic meter) may be weighed, and such weights will be converted to cubic yards (cubic meters) for payment purposes. Factors for conversion from weight measurement to volume measurement will be determined by the Engineer and shall be agreed to by the Contractor before such method of measurement of pay quantities is used.

Bituminous materials will be measured by the gallon (liter) or ton (kilogram). When measured by volume, such volumes will be measured at 60 F (15 C) or will be corrected to the volume at 60 F (15 C) using ASTM D 1250 for asphalts or ASTM D 633 for tars.

Net certified scale weights or weights based on certified volumes in the case of rail shipments will be used as a basis of measurement, subject to correction when bituminous material has been lost from the car or the distributor, wasted, or otherwise not incorporated in the work.

When bituminous materials are shipped by truck or transport, net certified weights by volume, subject to correction for loss or foaming, may be used for computing quantities.

Cement will be measured by the ton (kilogram) or hundredweight (kilogram).

Timber will be measured by the thousand feet board measure (M.F.B.M.) actually incorporated in the structure. Measurement will be based on nominal widths and thicknesses and the extreme length of each piece.

The term ``lump sum'' when used as an item of payment will mean complete payment for the work described in the contract.

When a complete structure or structural unit (in effect, ``lump sum'' work) is specified as the unit of measurement, the unit will be construed to include all necessary fittings and accessories.

Rental of equipment will be measured by time in hours of actual working time and necessary traveling time of the equipment within the limits of the work. Special equipment ordered by the Engineer in connection with force account work will be measured as agreed in the change order or supplemental agreement authorizing such force account work as provided in the subsection titled PAYMENT FOR EXTRA AND FORCE ACCOUNT WORK of this section.

When standard manufactured items are specified such as fence, wire, plates, rolled shapes, pipe conduit, etc., and these items are identified by gage, unit weight, section dimensions, etc., such identification will be considered to be nominal weights or dimensions. Unless more stringently controlled by tolerances in cited specifications, manufacturing tolerances established by the industries involved will be accepted.

Scales for weighing materials which are required to be proportioned or measured and paid for by weight shall be furnished, erected, and maintained by the Contractor, or be certified permanently installed commercial scales.

Scales shall be accurate within one-half percent of the correct weight throughout the range of use. The Contractor shall have the scales checked under the observation of the inspector before beginning work and at such other times as requested. The intervals shall be uniform in spacing throughout the graduated or marked length of the beam or dial and shall not exceed one-tenth of 1 percent of the nominal rated capacity of the scale, but not less than 1 pound (454 grams). The use of spring balances will not be permitted.

Beams, dials, platforms, and other scale equipment shall be so arranged that the operator and the inspector can safely and conveniently view them.

Scale installations shall have available ten standard 50-pound (2.3 kilogram) weights for testing the weighing equipment or suitable weights and devices for other approved equipment.

Scales must be tested for accuracy and serviced before use at a new site. Platform scales shall be installed and maintained with the platform level and rigid bulkheads at each end.

Scales ``overweighing'' (indicating more than correct weight) will not be permitted to operate, and all materials received subsequent to the last previous correct weighting-accuracy test will be reduced by the percentage of error in excess of one-half of 1 percent.

In the event inspection reveals the scales have been ``underweighing'' (indicating less than correct weight), they shall be adjusted, and no additional payment to the Contractor will be allowed for materials previously weighed and recorded.

All costs in connection with furnishing, installing, certifying, testing, and maintaining scales; for furnishing check weights and scale house; and for all other items specified in this subsection, for the weighing of materials for proportioning or payment, shall be included in the unit contract prices for the various items of the project.

When the estimated quantities for a specific portion of the work are designated as the pay quantities in the contract, they shall be the final quantities for which payment for such specific portion of the work will be made, unless the dimensions of said portions of the work shown on the plans are revised by the Engineer. If revised dimensions

result in an increase or decrease in the quantities of such work, the final quantities for payment will be revised in the amount represented by the authorized changes in the dimensions.

90-02 SCOPE OF PAYMENT. The Contractor shall receive and accept compensation provided for in the contract as full payment for furnishing all materials, for performing all work under the contract in a complete and acceptable manner, and for all risk, loss, damage, or expense of whatever character arising out of the nature of the work or the prosecution thereof, subject to the provisions of the subsection titled NO WAIVER OF LEGAL RIGHTS of Section 70.

When the ``basis of payment'' subsection of a technical specification requires that the contract price (price bid) include compensation for certain work or material essential to the item, this same work or material will not also be measured for payment under any other contract item which may appear elsewhere in the contract, plans, or specifications.

90-03 COMPENSATION FOR ALTERED QUANTITIES. When the accepted quantities of work vary from the quantities in the proposal, the Contractor shall accept as payment in full, so far as contract items are concerned, payment at the original contract price for the accepted quantities of work actually completed and accepted. No allowance, except as provided for in the subsection titled ALTERATION OF WORK AND QUANTITIES of Section 40 will be made for any increased expense, loss of expected reimbursement, or loss of anticipated profits suffered or claimed by the Contractor which results directly from such alterations or indirectly from his/her unbalanced allocation of overhead and profit among the contract items, or from any other cause.

90-04 PAYMENT FOR OMITTED ITEMS. As specified in the subsection titled OMITTED ITEMS of Section 40, the Engineer shall have the right to omit from the work (order nonperformance) any contract item, except major contract items, in the best interest of the Owner.

Should the Engineer omit or order nonperformance of a contract item or portion of such item from the work, the Contractor shall accept payment in full at the contract prices for any work actually completed and acceptable prior to the Engineer's order to omit or nonperform such contract item.

Acceptable materials ordered by the Contractor or delivered on the work prior to the date of the Engineer's order will be paid for at the actual cost to the Contractor and shall thereupon become the property of the Owner.

In addition to the reimbursement hereinbefore provided, the Contractor shall be reimbursed for all actual costs incurred for the purpose of performing the omitted contract item prior to the date of the Engineer's order. Such additional costs incurred by the Contractor must be directly related to the deleted contract item and shall be supported by certified statements by the Contractor as to the nature the amount of such costs.

90-05 PAYMENT FOR EXTRA AND FORCE ACCOUNT WORK. Extra work, performed in accordance with the subsection titled EXTRA WORK of Section 40, will be paid for at the contract prices or agreed prices specified in the change order or supplemental agreement authorizing the extra work. When the change order or supplemental agreement authorizing the extra work requires that it be done by force account, such force account shall be measured and paid for based on expended labor, equipment, and materials plus a negotiated and agreed upon allowance for overhead and profit.

a. Miscellaneous. No additional allowance will be made for general superintendence, the use of small tools, or other costs for which no specific allowance is herein provided.

b. Comparison of Record. The Contractor and the Engineer shall compare records of the cost of force account work at the end of each day. Agreement shall be indicated by signature of the Contractor and the Engineer or their duly authorized representatives.

c. Statement. No payment will be made for work performed on a force account basis until the Contractor has furnished the Engineer with duplicate itemized statements of the cost of such force account work detailed as follows:

(1) Name, classification, date, daily hours, total hours, rate and extension for each laborer and foreman.

(2) Designation, dates, daily hours, total hours, rental rate, and extension for each unit of machinery and equipment.

(3) Quantities of materials, prices, and extensions.

(4) Transportation of materials.

(5) Cost of property damage, liability and workman's compensation insurance premiums, unemployment insurance contributions, and social security tax.

Statements shall be accompanied and supported by a receipted invoice for all materials used and transportation charges. However, if materials used on the force account work are not specifically purchased for such work but are taken from the Contractor's stock, then in lieu of the invoices the Contractor shall furnish an affidavit certifying that such materials were taken from his/her stock, that the quantity claimed was actually used, and that the price and transportation claimed represent the actual cost to the Contractor.

90-06 PARTIAL PAYMENTS. Partial payments will be made at least once each month as the work progresses. Said payments will be based upon estimates prepared by the Engineer of the value of the work performed and materials complete in place in accordance with the contract, plans, and specifications. Such partial payments may also include the delivered actual cost of those materials stockpiled and stored in accordance with the subsection titled PAYMENT FOR MATERIALS ON HAND of this section.

No partial payment will be made when the amount due the Contractor since the last estimate amounts to less than five hundred dollars.

From the total of the amount determined to be payable on a partial payment, 10 percent of such total amount will be deducted and retained by the Owner until the final payment is made, except as may be provided (at the Contractor's option) in the subsection titled PAYMENT OF WITHHELD FUNDS of this section. The balance (90 percent) of the amount payable, less all previous payments, shall be certified for payment. Should the Contractor exercise his/her option, as provided in the subsection titled PAYMENT OF WITHHELD FUNDS of this section, no such 10 percent retainage shall be deducted.

When not less than 95 percent of the work has been completed, the Engineer may, at the Owner's discretion and with the consent of the surety, prepare an estimate from which will be retained an amount not less than twice the contract value or estimated cost, whichever is greater, of the work remaining to be done. The remainder, less all previous payments and deductions, will then be certified for payment to the Contractor.

It is understood and agreed that the Contractor shall not be entitled to demand or receive partial payment based on quantities of work in excess of those provided in the proposal or covered by approved change orders or supplemental agreements, except when such excess quantities have been determined by the Engineer to be a part of the final quantity for the item of work in question.

No partial payment shall bind the Owner to the acceptance of any materials or work in place as to quality or quantity. All partial payments are subject to correction at the time of final payment as provided in the subsection titled ACCEPTANCE AND FINAL PAYMENT of this section.

The Contractor shall deliver to the Owner a complete release of all claims for labor and material arising out of this contract before the final retained percentage or final payment is made. If any subcontractor or supplier fails to furnish such a release in full, the Contractor may furnish a bond or other collateral satisfactory to the Owner to indemnify the Owner against any potential lien or other such claim. The bond or collateral shall include all costs, expenses, and attorney fees the Owner may be compelled to pay in discharging any such lien or claim.

* * * *

90-09 ACCEPTANCE AND FINAL PAYMENT. When the contract work has been accepted in accordance with the requirements of the subsection titled FINAL ACCEPTANCE of Section 50, the Engineer will prepare the final estimate of the items of work actually performed. The Contractor shall approve the Engineer's final estimate or advise the Engineer of his/her objections to the final estimate which are based on disputes in measurements or computations of the final quantities to be paid under the contract as amended by change order or supplemental agreement. The Contractor and the Engineer shall resolve all disputes (if any) in the measurement and computation of final quantities to be paid within 30 calendar days of the Contractor's receipt of the Engineer's final estimate. If, after such 30-day period, a dispute still exists, the Contractor may approve the Engineer's estimate under protest of the quantities in dispute, and such disputed quantities shall be considered by the Owner as a claim in accordance with the subsection titled CLAIMS FOR ADJUSTMENT AND DISPUTES of Section 50.

After the Contractor has approved, or approved under protest, the Engineer's final estimate, final payment will be processed based on the entire sum, or the undisputed sum in case of approval under protest, determined to be due the Contractor less all previous payments and all amounts to be deducted under the provisions of the contract. All prior partial estimates and payments shall be subject to correction in the final estimate and payment.

If the Contractor has filed a claim for additional compensation under the provisions of the subsection titled CLAIMS FOR ADJUSTMENTS AND DISPUTES of Section 50 or under the provisions of this subsection, such claims will be considered by the Owner in accordance with local laws or ordinances. Upon final adjudication of such claims, any additional payment determined to be due the Contractor will be paid pursuant to a supplemental final estimate.

END OF SECTION 90

SECTION 100
CONTRACTOR QUALITY CONTROL PROGRAM

100-01 GENERAL. When the specification requires a Contractor Quality Control Program, the Contractor shall establish, provide, and maintain an effective Quality Control Program that details the methods and procedures that will be taken to assure that all materials and completed construction required by this contract conform to contract plans, technical specifications and other requirements, whether manufactured by the Contractor, or procured from subcontractors or vendors. Although guidelines are established and certain minimum requirements are specified herein and elsewhere in the contract technical specifications, the Contractor shall assume full responsibility for accomplishing the stated purpose.

The intent of this section is to enable the Contractor to establish a necessary level of control that will:

a. Adequately provide for the production of acceptable quality materials.

b. Provide sufficient information to assure both the Contractor and the Engineer that the specification requirements can be met.

c. Allow the Contractor as much latitude as possible to develop his or her own standard of control.

The Contractor shall be prepared to discuss and present, at the preconstruction conference, his/her understanding of the quality control requirements. The Contractor shall not begin any construction or production of materials to be incorporated into the completed work until the Quality Control Program has been reviewed by the Engineer. No partial payment will be made for materials subject to specific quality control requirements until the Quality Control Program has been reviewed.

The quality control requirements contained in this section and elsewhere in the contract technical specifications are in addition to and separate from the acceptance testing requirements. Acceptance testing requirements are the responsibility of the Engineer.

100-02 DESCRIPTION OF PROGRAM.

a. General Description. The Contractor shall establish a Quality Control Program to perform inspection and testing of all items of work required by the technical specifications, including those performed by subcontractors. This Quality Control Program shall ensure conformance to applicable specifications and plans with respect to materials, workmanship, construction, finish, and functional performance. The Quality Control Program shall be effective for control of all construction work performed under this Contract and shall specifically include surveillance and tests required by the technical specifications, in addition to other requirements of this section and any other activities deemed necessary by the Contractor to establish an effective level of quality control.

b. Quality Control Program. The Contractor shall describe the Quality Control Program in a written document that shall be reviewed by the Engineer prior to the start of any production, construction, or off-site fabrication. The written Quality Control Program shall be submitted to the Engineer for review at least **[ ]** calendar days before
the **[ ]**.

* * * *

Submittal of the written Quality Control Program prior to the start of work will allow for detailed discussion of the requirements at the preconstruction meeting. This will give the Contractor a better understanding of the requirements before developing the Quality Control Program.

When selecting the required days for the contractor to submit the Quality Control program, adequate time should be allowed for the Quality Control Program to be a supplement to the Owner's Construction Management Plan.

* * * *

(3) An individual with 3 years of highway and/or airport paving experience acceptable to the Engineer, with a Bachelor of Science Degree in Civil Engineering, Civil Engineering Technology or Construction.

(4) Construction materials technician certified at Level III by the National Institute for Certification in Engineering Technologies (NICET).

(5) Highway materials technician certified at Level III by NICET.

(6) Highway construction technician certified at Level III by NICET.

(7) A NICET certified engineering technician in Civil Engineering Technology with 5 years of highway and/or airport paving experience acceptable to the Engineer.

The Program Administrator shall have full authority to institute any and all actions necessary for the successful implementation of the Quality Control Program to ensure compliance with the contract plans and technical specifications. The Program Administrator shall report directly to a responsible officer of the construction firm. The Program Administrator may supervise the Quality Control Program on more than one project provided that person can be at the job site within 2 hours after being notified of a problem.

* * * *

Contractor of overall responsibility for scheduling, sequencing, and coordinating all work to comply with the requirements of the contract.

100-05 SUBMITTALS SCHEDULE. The Contractor shall submit a detailed listing of all submittals (e.g., mix designs, material certifications) and shop drawings required by the technical specifications. The listing can be developed in a spreadsheet format and shall include:

a. Specification item number;
b. Item description;
c. Description of submittal;
d. Specification paragraph requiring submittal; and
e. Scheduled date of submittal.

100-06 INSPECTION REQUIREMENTS. Quality control inspection functions shall be organized to provide inspections for all definable features of work, as detailed below. All inspections shall be documented by the Contractor as specified by Section 100-07.

Inspections shall be performed daily to ensure continuing compliance with contract requirements until completion of the particular feature of work. These shall include the following minimum requirements:

a. During plant operation for material production, quality control test results and periodic inspections shall be utilized to ensure the quality of aggregates and other mix components, and to adjust and control mix proportioning to meet the approved mix design and other requirements of the technical specifications. All equipment utilized in proportioning and mixing shall be inspected to ensure its proper operating condition. The Quality Control Program shall detail how these and other quality control functions will be accomplished and utilized.

b. During field operations, quality control test results and periodic inspections shall be utilized to ensure the quality of all materials and workmanship. All equipment utilized in placing, finishing, and compacting shall be inspected to ensure its proper operating condition and to ensure that all such operations are in conformance to the technical specifications and are within the plan dimensions, lines, grades, and tolerances specified. The Program shall document how these and other quality control functions will be accomplished and utilized.

100-07 QUALITY CONTROL TESTING PLAN. As a part of the overall Quality Control Program, the Contractor shall implement a quality control testing plan, as required by the technical specifications. The testing plan shall include the minimum tests and test frequencies required by each technical specification Item, as well as any additional quality control tests that the Contractor deems necessary to adequately control production and/or construction processes.
The testing plan can be developed in a spreadsheet fashion and shall, as a minimum, include the following:

a. Specification item number (e.g., P-401);
b. Item description (e.g., Plant Mix Bituminous Pavements);
c. Test type (e.g., gradation, grade, asphalt content);
d. Test standard (e.g., ASTM or AASHTO test number, as applicable);
e. Test frequency (e.g., as required by technical specifications or minimum frequency when requirements are not stated);
f. Responsibility (e.g., plant technician); and
g. Control requirements (e.g., target, permissible deviations).

The testing plan shall contain a statistically-based procedure of random sampling for acquiring test samples in accordance with ASTM D 3665. The Engineer shall be provided the opportunity to witness quality control sampling and testing.

All quality control test results shall be documented by the Contractor as required by Section 100-08.

100-08 DOCUMENTATION. The Contractor shall maintain current quality control records of all inspections and tests performed. These records shall include factual evidence that the required inspections or tests have been

performed, including type and number of inspections or tests involved; results of inspections or tests; nature of defects, deviations, causes for rejection, etc.; proposed remedial action; and corrective actions taken.

These records must cover both conforming and defective or deficient features, and must include a statement that all supplies and materials incorporated in the work are in full compliance with the terms of the contract. Legible copies of these records shall be furnished to the Engineer daily. The records shall cover all work placed subsequent to the previously furnished records and shall be verified and signed by the Contractor's Program Administrator.

Specific Contractor quality control records required for the contract shall include, but are not necessarily limited to, the following records:

a. Daily Inspection Reports. Each Contractor quality control technician shall maintain a daily log of all inspections performed for both Contractor and subcontractor operations on a form acceptable to the Engineer. These technician's daily reports shall provide factual evidence that continuous quality control inspections have been performed and shall, as a minimum, include the following:

(1) Technical specification item number and description;
(2) Compliance with approved submittals;
(3) Proper storage of materials and equipment;
(4) Proper operation of all equipment;
(5) Adherence to plans and technical specifications;
(6) Review of quality control tests; and
(7) Safety inspection.

The daily inspection reports shall identify inspections conducted, results of inspections, location and nature of defects found, causes for rejection, and remedial or corrective actions taken or proposed.

The daily inspection reports shall be signed by the responsible quality control technician and the Program Administrator. The Engineer shall be provided at least one copy of each daily inspection report on the work day following the day of record.

b. Daily Test Reports. The Contractor shall be responsible for establishing a system that will record all quality control test results. Daily test reports shall document the following information:

(1) Technical specification item number and description;
(2) Test designation;
(3) Location;
(4) Date of test;
(5) Control requirements;
(6) Test results;
(7) Causes for rejection;
(8) Recommended remedial actions; and
(9) Retests.

Test results from each day's work period shall be submitted to the Engineer prior to the start of the next day's work period. When required by the technical specifications, the Contractor shall maintain statistical quality control charts. The daily test reports shall be signed by the responsible quality control technician and the Program Administrator.

100-09 CORRECTIVE ACTION REQUIREMENTS. The Quality Control Program shall indicate the appropriate action to be taken when a process is deemed, or believed, to be out of control (out of tolerance) and detail what action will be taken to bring the process into control. The requirements for corrective action shall include both general requirements for operation of the Quality Control Program as a whole, and for individual items of work contained in the technical specifications.

The Quality Control Program shall detail how the results of quality control inspections and tests will be used for determining the need for corrective action and shall contain clear sets of rules to gauge when a process is out of control and the type of correction to be taken to regain process control.

When applicable or required by the technical specifications, the Contractor shall establish and utilize statistical quality control charts for individual quality control tests. The requirements for corrective action shall be linked to the control charts.

100-10 SURVEILLANCE BY THE ENGINEER. All items of material and equipment shall be subject to surveillance by the Engineer at the point of production, manufacture or shipment to determine if the Contractor, producer, manufacturer or shipper maintains an adequate quality control system in conformance with the requirements detailed herein and the applicable technical specifications and plans. In addition, all items of materials, equipment and work in place shall be subject to surveillance by the Engineer at the site for the same purpose.

Surveillance by the Engineer does not relieve the Contractor of performing quality control inspections of either on-site or off-site Contractor's or subcontractor's work.

100-11 NONCOMPLIANCE.

a. The Engineer will notify the Contractor of any noncompliance with any of the foregoing requirements. The Contractor shall, after receipt of such notice, immediately take corrective action. Any notice, when delivered by the Engineer or his/her authorized representative to the Contractor or his/her authorized representative at the site of the work, shall be considered sufficient notice.

b. In cases where quality control activities do not comply with either the Contractor Quality Control Program or the contract provisions, or where the Contractor fails to properly operate and maintain an effective Quality Control Program, as determined by the Engineer, the Engineer may:

(1) Order the Contractor to replace ineffective or unqualified quality control personnel or subcontractors.

(2) Order the Contractor to stop operations until appropriate corrective actions are taken.

END OF SECTION 100

SECTION 110
METHOD OF ESTIMATING PERCENTAGE OF MATERIAL WITHIN SPECIFICATION LIMITS (PWL)

110-01 GENERAL. When the specifications provide for acceptance of material based on the method of estimating percentage of material within specification limits (PWL), the PWL will be determined in accordance with this section. All test results for a lot will be analyzed statistically to determine the total estimated percent of the lot that is within specification limits. The PWL is computed using the sample average (X) and sample standard deviation (S_n) of the specified number (n) of sublots for the lot and the specification tolerance limits, L for lower and U for upper, for the particular acceptance parameter. From these values, the respective Quality index(s), Q_L for Lower Quality Index and/or Q_U for Upper Quality Index, is computed and the PWL for the lot for the specified n is determined from Table 1. All specification limits specified in the technical sections shall be absolute values. Test results used in the calculations shall be to the significant figure given in the test procedure.

There is some degree of uncertainty (risk) in the measurement for acceptance because only a small fraction of production material (the population) is sampled and tested. This uncertainty exists because all portions of the production material have the same probability to be randomly sampled. The Contractor's risk is the probability that material produced at the acceptable quality level is rejected or subjected to a pay adjustment. The Owner's risk is the probability that material produced at the rejectable quality level is accepted.

IT IS THE INTENT OF THIS SECTION TO INFORM THE CONTRACTOR THAT, IN ORDER TO CONSISTENTLY OFFSET THE CONTRACTOR'S RISK FOR MATERIAL EVALUATED, PRODUCTION QUALITY (USING POPULATION AVERAGE AND POPULATION STANDARD DEVIATION) MUST BE MAINTAINED AT THE ACCEPTABLE QUALITY SPECIFIED OR HIGHER. IN ALL CASES, IT IS THE RESPONSIBILITY OF THE CONTRACTOR TO PRODUCE AT QUALITY LEVELS THAT WILL MEET THE SPECIFIED ACCEPTANCE CRITERIA WHEN SAMPLED AND TESTED AT THE FREQUENCIES SPECIFIED.

* *

Paragraph 110-01 shall be included verbatim in all projects.

* *

110-02 METHOD FOR COMPUTING PWL. The computational sequence for computing PWL is as follows:

a. Divide the lot into n sublots in accordance with the acceptance requirements of the specification.

b. Locate the random sampling position within the sublot in accordance with the requirements of the specification.

c. Make a measurement at each location, or take a test portion and make the measurement on the test portion in accordance with the testing requirements of the specification.

d. Find the sample average (X) for all sublot values within the lot by using the following formula:

$$X = (x_1 + x_2 + x_3 + \ldots x_n) / n$$

Where: X = Sample average of all sublot values within a lot
x_1, x_2 = Individual sublot values
n = Number of sublots

e. Find the sample standard deviation (S_n) by use of the following formula:

$$S_n = [(d_1^2 + d_2^2 + d_3^2 + \ldots d_n^2)/(n-1)]^{1/2}$$

Where: S_n = Sample standard deviation of the number of sublot values in the set
$d_1, d_2,$ = Deviations of the individual sublot values $x_1, x_2, \ldots$ from the average value X

that is: $d_1 = (x_1 - X)$, $d_2 = (x_2 - X)$ … $d_n = (x_n - X)$

n = Number of sublots

f. For single sided specification limits (i.e., L only), compute the Lower Quality Index Q_L by use of the following formula:

$Q_L = (X - L) / S_n$

Where: L = specification lower tolerance limit

Estimate the percentage of material within limits (PWL) by entering Table 1 with Q_L, using the column appropriate to the total number (n) of measurements. If the value of Q_L falls between values shown on the table, use the next higher value of PWL.

g. For double-sided specification limits (i.e. L and U), compute the Quality Indexes Q_L and Q_U by use of the following formulas:

$Q_L = (X - L) / Sn$ and $Q_U = (U - X) / Sn$

Where: L and U = specification lower and upper tolerance limits

Estimate the percentage of material between the lower (L) and upper (U) tolerance limits (PWL) by entering Table 1 separately with Q_L and Q_U, using the column appropriate to the total number (n) of measurements, and determining the percent of material above P_L and percent of material below P_U for each tolerance limit. If the values of Q_L fall between values shown on the table, use the next higher value of P_L or P_U. Determine the PWL by use of the following formula:

$PWL = (P_U + P_L) - 100$

Where: P_L = percent within lower specification limit
P_U = percent within upper specification limit

EXAMPLE OF PWL CALCULATION

Project: Example Project
Test Item: Item P-401, Lot A.

A. PWL Determination for Mat Density.

1. Density of four random cores taken from Lot A.

A-1 96.60
A-2 97.55
A-3 99.30
A-4 98.35
n = 4

2. Calculate average density for the lot.

X = (x1 + x2 + x3 + . . .xn) / n
X = (96.60 + 97.55 + 99.30 + 98.35) / 4
X = 97.95 percent density

3. Calculate the standard deviation for the lot.

$Sn = [((96.60 - 97.95)^2 + (97.55 - 97.95)^2 + (99.30 - 97.95)^2 + (98.35 - 97.95)^2)) / (4 - 1)]^{1/2}$
$Sn = [(1.82 + 0.16 + 1.82 + 0.16) / 3]^{1/2}$
$Sn = 1.15$

4. Calculate the Lower Quality Index Q_L for the lot. (L=96.3)

$Q_L = (X - L) / Sn$
$Q_L = (97.95 - 96.30) / 1.15$
$Q_L = 1.4348$

5. Determine PWL by entering Table 1 with $Q_L = 1.44$ and n= 4.

PWL = 98

B. PWL Determination for Air Voids.

1. Air Voids of four random samples taken from Lot A.

A-1	5.00
A-2	3.74
A-3	2.30
A-4	3.25

2. Calculate the average air voids for the lot.

$X = (x1 + x + x3 \ldots n) / n$

$X = (5.00 + 3.74 + 2.30 + 3.25) / 4$

$X = 3.57$ percent

3. Calculate the standard deviation Sn for the lot.

$Sn = [((3.57 - 5.00)^2 + (3.57 - 3.74)^2 + (3.57 - 2.30)^2 + (3.57 - 3.25)^2) / (4 - 1)]^{1/2}$

$Sn = [(2.04 + 0.03 + 1.62 + 0.10) / 3]^{1/2}$

$Sn = 1.12$

4. Calculate the Lower Quality Index Q_L for the lot. (L= 2.0)

$Q_L = (X - L) / Sn$

$Q_L = (3.57 - 2.00) / 1.12$

$Q_L = 1.3992$

5. Determine P_L by entering Table 1 with $Q_L = 1.41$ and n = 4.

PL = 97

6. Calculate the Upper Quality Index Q_U for the lot. (U= 5.0)

$Q_U = (U - X) / Sn$

$Q_U = (5.00 - 3.57) / 1.12$

$Q_U = 1.2702$

7. Determine P_U by entering Table 1 with $Q_U = 1.29$ and n = 4.

$P_U = 93$

8. Calculate Air Voids PWL

$PWL = (P_L + P_U) - 100$

$PWL = (97 + 93) - 100 = 90$

EXAMPLE OF OUTLIER CALCULATION (Reference ASTM E 78)

Project: Example Project
Test Item: Item P-401, Lot A.

A. Outlier Determination for Mat Density.

1. Density of four random cores taken from Lot A. arranged in descending order.

A-3 99.30
A-4 98.35
A-2 97.55
A-1 96.60

2. Use n=4 and upper 5 percent significance level of to find the critical value for test criterion = 1.463.

3. Use average density, standard deviation, and test criterion value to evaluate density measurements.

a. For measurements greater than the average:
If: (measurement - average)/(standard deviation) is less than test criterion,
Then: the measurement is not considered an outlier

for A-3 Check if (99.30 - 97.95) / 1.15 greater than 1.463
1.174 is less than 1.463, the value is not an outlier

b. For measurements less than the average:
If (average - measurement)/(standard deviation) is less than test criterion,
the measurement is not considered an outlier

for A-1 Check if (97.95 - 96.60) / 1.15 greater than 1.463
1.0 is less than 1.463, the value is not an outlier

NOTE: In this example, a measurement would be considered an outlier if the density was:
greater than (97.95+1.463x1.15) = 99.63 percent or,
less than (97.95-1.463x1.15) = 96.27 percent

TABLE 1. TABLE FOR ESTIMATING PERCENT OF LOT WITHIN LIMITS (PWL)

Percent Within Limits (P_L and P_U)	Positive Values of Q (Q_L and Q_U)							
	n=3	n=4	n=5	n=6	n=7	n=8	n=9	n=10
99	1.1541	1.4700	1.6714	1.8008	1.8888	1.9520	1.9994	2.0362
98	1.1524	1.4400	1.6016	1.6982	1.7612	1.8053	1.8379	1.8630
97	1.1496	1.4100	1.5427	1.6181	1.6661	1.6993	1.7235	1.7420
96	1.1456	1.3800	1.4897	1.5497	1.5871	1.6127	1.6313	1.6454
95	1.1405	1.3500	1.4407	1.4887	1.5181	1.5381	1.5525	1.5635
94	1.1342	1.3200	1.3946	1.4329	1.4561	1.4717	1.4829	1.4914
93	1.1269	1.2900	1.3508	1.3810	1.3991	1.4112	1.4199	1.4265
92	1.1184	1.2600	1.3088	1.3323	1.3461	1.3554	1.3620	1.3670
91	1.1089	1.2300	1.2683	1.2860	1.2964	1.3032	1.3081	1.3118
90	1.0982	1.2000	1.2290	1.2419	1.2492	1.2541	1.2576	1.2602
89	1.0864	1.1700	1.1909	1.1995	1.2043	1.2075	1.2098	1.2115
88	1.0736	1.1400	1.1537	1.1587	1.1613	1.1630	1.1643	1.1653
87	1.0597	1.1100	1.1173	1.1192	1.1199	1.1204	1.1208	1.1212
86	1.0448	1.0800	1.0817	1.0808	1.0800	1.0794	1.0791	1.0789
85	1.0288	1.0500	1.0467	1.0435	1.0413	1.0399	1.0389	1.0382
84	1.0119	1.0200	1.0124	1.0071	1.0037	1.0015	1.0000	0.9990
83	0.9939	0.9900	0.9785	0.9715	0.9671	0.9643	0.9624	0.9610
82	0.9749	0.9600	0.9452	0.9367	0.9315	0.9281	0.9258	0.9241
81	0.9550	0.9300	0.9123	0.9025	0.8966	0.8928	0.8901	0.8882
80	0.9342	0.9000	0.8799	0.8690	0.8625	0.8583	0.8554	0.8533
79	0.9124	0.8700	0.8478	0.8360	0.8291	0.8245	0.8214	0.8192
78	0.8897	0.8400	0.8160	0.8036	0.7962	0.7915	0.7882	0.7858
77	0.8662	0.8100	0.7846	0.7716	0.7640	0.7590	0.7556	0.7531
76	0.8417	0.7800	0.7535	0.7401	0.7322	0.7271	0.7236	0.7211
75	0.8165	0.7500	0.7226	0.7089	0.7009	0.6958	0.6922	0.6896
74	0.7904	0.7200	0.6921	0.6781	0.6701	0.6649	0.6613	0.6587
73	0.7636	0.6900	0.6617	0.6477	0.6396	0.6344	0.6308	0.6282
72	0.7360	0.6600	0.6316	0.6176	0.6095	0.6044	0.6008	0.5982
71	0.7077	0.6300	0.6016	0.5878	0.5798	0.5747	0.5712	0.5686
70	0.6787	0.6000	0.5719	0.5582	0.5504	0.5454	0.5419	0.5394
69	0.6490	0.5700	0.5423	0.5290	0.5213	0.5164	0.5130	0.5105
68	0.6187	0.5400	0.5129	0.4999	0.4924	0.4877	0.4844	0.4820
67	0.5878	0.5100	0.4836	0.4710	0.4638	0.4592	0.4560	0.4537
66	0.5563	0.4800	0.4545	0.4424	0.4355	0.4310	0.4280	0.4257
65	0.5242	0.4500	0.4255	0.4139	0.4073	0.4030	0.4001	0.3980
64	0.4916	0.4200	0.3967	0.3856	0.3793	0.3753	0.3725	0.3705
63	0.4586	0.3900	0.3679	0.3575	0.3515	0.3477	0.3451	0.3432
62	0.4251	0.3600	0.3392	0.3295	0.3239	0.3203	0.3179	0.3161
61	0.3911	0.3300	0.3107	0.3016	0.2964	0.2931	0.2908	0.2892
60	0.3568	0.3000	0.2822	0.2738	0.2691	0.2660	0.2639	0.2624
59	0.3222	0.2700	0.2537	0.2461	0.2418	0.2391	0.2372	0.2358
58	0.2872	0.2400	0.2254	0.2186	0.2147	0.2122	0.2105	0.2093
57	0.2519	0.2100	0.1971	0.1911	0.1877	0.1855	0.1840	0.1829
56	0.2164	0.1800	0.1688	0.1636	0.1607	0.1588	0.1575	0.1566
55	0.1806	0.1500	0.1406	0.1363	0.1338	0.1322	0.1312	0.1304
54	0.1447	0.1200	0.1125	0.1090	0.1070	0.1057	0.1049	0.1042
53	0.1087	0.0900	0.0843	0.0817	0.0802	0.0793	0.0786	0.0781
52	0.0725	0.0600	0.0562	0.0544	0.0534	0.0528	0.0524	0.0521
51	0.0363	0.0300	0.0281	0.0272	0.0267	0.0264	0.0262	0.0260
50	0.0000	0.0000	0.0000	0.0000	0.0000	0.0000	0.0000	0.0000

TABLE 1. TABLE FOR ESTIMATING PERCENT OF LOT WITHIN LIMITS (PWL)

Percent Within Limits (P_L and P_U)	Negative Values of Q (Q_L and Q_U)							
	n=3	n=4	n=5	n=6	n=7	n=8	n=9	n=10
49	-0.0363	-0.0300	-0.0281	-0.0272	-0.0267	-0.0264	-0.0262	-0.0260
48	-0.0725	-0.0600	-0.0562	-0.0544	-0.0534	-0.0528	-0.0524	-0.0521
47	-0.1087	-0.0900	-0.0843	-0.0817	-0.0802	-0.0793	-0.0786	-0.0781
46	-0.1447	-0.1200	-0.1125	-0.1090	-0.1070	-0.1057	-0.1049	-0.1042
45	-0.1806	-0.1500	-0.1406	-0.1363	-0.1338	-0.1322	-0.1312	-0.1304
44	-0.2164	-0.1800	-0.1688	-0.1636	-0.1607	-0.1588	-0.1575	-0.1566
43	-0.2519	-0.2100	-0.1971	-0.1911	-0.1877	-0.1855	-0.1840	-0.1829
42	-0.2872	-0.2400	-0.2254	-0.2186	-0.2147	-0.2122	-0.2105	-0.2093
41	-0.3222	-0.2700	-0.2537	-0.2461	-0.2418	-0.2391	-0.2372	-0.2358
40	-0.3568	-0.3000	-0.2822	-0.2738	-0.2691	-0.2660	-0.2639	-0.2624
39	-0.3911	-0.3300	-0.3107	-0.3016	-0.2964	-0.2931	-0.2908	-0.2892
38	-0.4251	-0.3600	-0.3392	-0.3295	-0.3239	-0.3203	-0.3179	-0.3161
37	-0.4586	-0.3900	-0.3679	-0.3575	-0.3515	-0.3477	-0.3451	-0.3432
36	-0.4916	-0.4200	-0.3967	-0.3856	-0.3793	-0.3753	-0.3725	-0.3705
35	-0.5242	-0.4500	-0.4255	-0.4139	-0.4073	-0.4030	-0.4001	-0.3980
34	-0.5563	-0.4800	-0.4545	-0.4424	-0.4355	-0.4310	-0.4280	-0.4257
33	-0.5878	-0.5100	-0.4836	-0.4710	-0.4638	-0.4592	-0.4560	-0.4537
32	-0.6187	-0.5400	-0.5129	-0.4999	-0.4924	-0.4877	-0.4844	-0.4820
31	-0.6490	-0.5700	-0.5423	-0.5290	-0.5213	-0.5164	-0.5130	-0.5105
30	-0.6787	-0.6000	-0.5719	-0.5582	-0.5504	-0.5454	-0.5419	-0.5394
29	-0.7077	-0.6300	-0.6016	-0.5878	-0.5798	-0.5747	-0.5712	-0.5686
28	-0.7360	-0.6600	-0.6316	-0.6176	-0.6095	-0.6044	-0.6008	-0.5982
27	-0.7636	-0.6900	-0.6617	-0.6477	-0.6396	-0.6344	-0.6308	-0.6282
26	-0.7904	-0.7200	-0.6921	-0.6781	-0.6701	-0.6649	-0.6613	-0.6587
25	-0.8165	-0.7500	-0.7226	-0.7089	-0.7009	-0.6958	-0.6922	-0.6896
24	-0.8417	-0.7800	-0.7535	-0.7401	-0.7322	-0.7271	-0.7236	-0.7211
23	-0.8662	-0.8100	-0.7846	-0.7716	-0.7640	-0.7590	-0.7556	-0.7531
22	-0.8897	-0.8400	-0.8160	-0.8036	-0.7962	-0.7915	-0.7882	-0.7858
21	-0.9124	-0.8700	-0.8478	-0.8360	-0.8291	-0.8245	-0.8214	-0.8192
20	-0.9342	-0.9000	-0.8799	-0.8690	-0.8625	-0.8583	-0.8554	-0.8533
19	-0.9550	-0.9300	-0.9123	-0.9025	-0.8966	-0.8928	-0.8901	-0.8882
18	-0.9749	-0.9600	-0.9452	-0.9367	-0.9315	-0.9281	-0.9258	-0.9241
17	-0.9939	-0.9900	-0.9785	-0.9715	-0.9671	-0.9643	-0.9624	-0.9610
16	-1.0119	-1.0200	-1.0124	-1.0071	-1.0037	-1.0015	-1.0000	-0.9990
15	-1.0288	-1.0500	-1.0467	-1.0435	-1.0413	-1.0399	-1.0389	-1.0382
14	-1.0448	-1.0800	-1.0817	-1.0808	-1.0800	-1.0794	-1.0791	-1.0789
13	-1.0597	-1.1100	-1.1173	-1.1192	-1.1199	-1.1204	-1.1208	-1.1212
12	-1.0736	-1.1400	-1.1537	-1.1587	-1.1613	-1.1630	-1.1643	-1.1653
11	-1.0864	-1.1700	-1.1909	-1.1995	-1.2043	-1.2075	-1.2098	-1.2115
10	-1.0982	-1.2000	-1.2290	-1.2419	-1.2492	-1.2541	-1.2576	-1.2602
9	-1.1089	-1.2300	-1.2683	-1.2860	-1.2964	-1.3032	-1.3081	-1.3118
8	-1.1184	-1.2600	-1.3088	-1.3323	-1.3461	-1.3554	-1.3620	-1.3670
7	-1.1269	-1.2900	-1.3508	-1.3810	-1.3991	-1.4112	-1.4199	-1.4265
6	-1.1342	-1.3200	-1.3946	-1.4329	-1.4561	-1.4717	-1.4829	-1.4914
5	-1.1405	-1.3500	-1.4407	-1.4887	-1.5181	-1.5381	-1.5525	-1.5635
4	-1.1456	-1.3800	-1.4897	-1.5497	-1.5871	-1.6127	-1.6313	-1.6454
3	-1.1496	-1.4100	-1.5427	-1.6181	-1.6661	-1.6993	-1.7235	-1.7420
2	-1.1524	-1.4400	-1.6016	-1.6982	-1.7612	-1.8053	-1.8379	-1.8630
1	-1.1541	-1.4700	-1.6714	-1.8008	-1.8888	-1.9520	-1.9994	-2.0362

END OF SECTION 110

SECTION 120
NUCLEAR GAGES

120-01 TESTING. When the specifications provide for nuclear gage acceptance testing of material for Items P-152, P-154, P-208, and P-209, the testing shall be performed in accordance with this section. At each sampling location, the field density shall be determined in accordance with ASTM D 2922 using the Direct Transmission Method. The nuclear gage shall be calibrated in accordance with Annex A1. Calibration and operation of the gage shall be in accordance with the requirements of the manufacturer. The operator of the nuclear gage must show evidence of training and experience in the use of the instrument. The gage shall be standardized daily in accordance with ASTM D 2922, paragraph 8.

Use of ASTM D 2922 results in a wet unit weight, and when using this method, ASTM D 3017 shall be used to determine the moisture content of the material. The moisture gage shall be standardized daily in accordance with ASTM D 3017, paragraph 7.

The material shall be accepted on a lot basis. Each Lot shall be divided into eight (8) sublots when ASTM D 2922 is used.

120-02. When PWL concepts are incorporated, compaction shall continue until a PWL of 90 percent or more is achieved using the lower specification tolerance limits (L) below.

The percentage of material within specification limits (PWL) shall be determined in accordance with the procedures specified in Section 110 of the General Provisions.

The lower specification tolerance limit (L) for density shall be:

Specification Item Number	Specification Tolerance (L) for Density, (percent of laboratory maximum)	
Item P-152	90.5 for cohesive material,	95.5 for non-cohesive
Item P-154	95.5	
Item P-208	97.0	
Item P-209	97.0	

If the PWL is less than 90 percent, the lot shall be reworked and recompacted by the Contractor at the Contractor's expense. After reworking and recompaction, the lot shall be resampled and retested. Retest results for the lot shall be reevaluated for acceptance. This procedure shall continue until the PWL is 90 percent or greater.

120-03 VERIFICATION TESTING. (For Items P-152 and P-154 only.) The Engineer will verify the maximum laboratory density of material placed in the field for each lot. A minimum of one test will be made for each lot of material at the site. The verification process will consist of; (1) compacting the material and determining the dry density and moisture-density in accordance with [ASTM D 698 for aircraft gross weights less than 60,0000 pounds] [ASTM D 1557 for aircraft gross weights 60,000 pounds or more], and (2) comparing the result with the laboratory moisture-density curves for the material being placed. This verification process is commonly referred to as a "one-point Proctor". If the material does not conform to the existing moisture-density curves, the Engineer will establish the laboratory maximum density and optimum moisture content for the material in accordance with [ASTM D 698 for aircraft gross weights less than 60,0000 pounds] [ASTM D 1557 for aircraft gross weights 60,000 pounds or more].

Additional verification tests will be made, if necessary, to properly classify all materials placed in the lot.

The percent compaction of each sampling location will be determined by dividing the field density of each sublot by the laboratory maximum density for the lot.

END OF SECTION 120

Intentionally Left Blank

PART II – EARTHWORK
ITEM P-101 SURFACE PREPARATION

DESCRIPTION

101-1.1. This item shall consist of preparation of existing pavement surfaces for overlay, removal of existing pavement, and other miscellaneous items. The work shall be accomplished in accordance with these specifications and the applicable drawings.

* *

For projects that involve preparing and repairing the existing pavement to accommodate an overlay, add the following ITEM P-101: SURFACE PREPARATION.

* *

EQUIPMENT

101-2.1. All equipment shall be specified hereinafter or as approved by the Engineer. The equipment shall not cause damage to the pavement to remain in place.

CONSTRUCTION

101-3.1. REMOVAL OF EXISTING PAVEMENT

a. Concrete: The existing concrete to be removed shall be freed from the pavement to remain unless jackhammers are used for the complete removal. This shall be accomplished by line drilling or sawing through the complete depth of the slab one foot inside the perimeter of the final removal limits or outside the load transfer devices, whichever is greater. In this case, the limits of removal would be located on joints. If line drilling is used, the distance between holes shall not exceed the diameter of the hole. The pavement between the perimeter of the pavement removal and the saw cut or line-drilled holes shall be removed with a jackhammer. Where the perimeter of the removal limits is not located on the joint, the perimeter shall be saw cut 2 inches in depth or 1/4 the slab thickness, whichever is less. Again, the concrete shall be line drilled or saw cut the full depth of the pavement 6 inches inside the removal limits. The pavement inside the saw cut or line shall be broken by methods suitable to the Contractor; however, if the material is to be wasted on the airport site, it shall be reduced to a maximum size designated by the airport owner. The Contractor's removal operation shall not cause damage to cables, utility ducts, pipelines, or drainage structures under the pavement. Any damage shall be repaired by the Contractor at no expense to the airport owner.

b. Asphaltic Concrete: Asphaltic concrete pavement to be removed shall be cut to the full depth of the bituminous material around the perimeter of the area to be removed. The pavement shall be removed in such a manner that the joint for each layer of pavement replacement is offset one foot from the joint in the preceding layer. This does not apply if the removed pavement is to be replaced with concrete or soil. If the material is to be wasted on the airport site, it shall be broken to a maximum size as designated by the airport owner.

101-3.2. PREPARATION OF JOINTS AND CRACKS. All joints and cracks in bituminous and concrete pavements to be overlaid with asphaltic concrete shall be cleaned of joint and crack sealer, debris, and vegetation. Any excess joint or crack sealer on the surface of the pavement shall also be removed from the pavement surface. If vegetation is a problem a soil sterilant shall be applied. Cracks and joints wider than 3/8 inch shall be filled with a mixture of emulsified asphalt and aggregate. The aggregate shall consist of limestone, volcanic ash, sand, or other material that will cure to form a hard substance. The combined gradation shall be as shown in Table 1.

TABLE 1

Sieve Size	Percent Passing
No. 4	100
No. 8	90-100
No. 16	65-90
No. 30	40-60
No. 50	25-42
No. 100	15-30
No. 200	10-20

Up to 3% cement can be added to accelerate the set time. The mixture shall not contain more than 20% natural sand without approval in writing from the Engineer.

The proportions of asphalt emulsion and aggregate shall be determined in the field and may be varied to facilitate construction requirements. Normally, these proportions will be approximately one part asphalt emulsion to five parts aggregate by volume. The material shall be poured into the joints or cracks or shall be placed in the joint or crack and compacted to form a voidless mass. The joint or crack shall be filled within 0 to 1/8 inch of the surface. Any material spilled outside the width of the joint shall be removed from the surface prior to constructing the overlay. Where concrete overlays are to be constructed, only the excess joint material on the surface and vegetation in the joints need to be removed.

101-3.3. REMOVAL OF PAINT AND RUBBER. All paint and rubber over one foot wide that will affect the bond of the new overlay shall be removed from the surface of the existing pavement. Chemicals, high-pressure water, heater scarifier (asphaltic concrete only), cold milling, or sandblasting may be used. Any methods used shall not cause major damage to the pavement. Major damage is defined as changing the properties of the pavement or removing pavement over 1/8 inch deep. If chemicals are used, they shall comply with the state's environmental protection regulations. No material shall be deposited on the runway shoulders. All wastes shall be disposed of in areas indicated in this specification or shown on the plans. This specification shall not be used for removal of rubber deposits to improve skid resistance or obliterate traffic markings where a new overlay is not to be constructed.

101-3.4. CONCRETE SPALL OR FAILED ASPHALTIC CONCRETE PAVEMENT REPAIR.

a. Repair of Concrete Spalls in Areas to be overlaid with Asphalt: The Contractors shall repair all spalled concrete as shown on the plans or as directed by the Resident Engineer. The perimeter of the repair shall be sawed a minimum of 1 inch deep or shall be cut with approved tools to this depth. The deteriorated material shall be removed to a depth where the existing material is firm or cannot be easily removed with a geologist pick. The removed area shall be filled with asphaltic concrete with a minimum Marshal stability of 1,200 lbs. and maximum flow of 20. The material shall be compacted with equipment approved by the Resident Engineer until the material is dense and no movement or marks can be noted. The material shall not be placed in lifts over 4 inches in depth. This method of repair applies only to pavement to be overlaid.

b. Asphaltic Concrete Pavement Repair: The failed areas shall be removed as specified in paragraph 101-3.1b. All failed material including surface, base course, subbase course, and subgrade shall be removed. The base course and subbase shall be replaced if it has been infiltrated with clay, silt, or other material affecting the load-bearing capacity. Materials and methods of construction shall comply with the other applicable sections of this specification.

101-3.5: COLD PLANING.

a. Patching: The machine shall be capable of cutting a vertical edge without chipping or spalling the edges of the pavement to remain. The machine shall have a positive method of controlling the depth of cut. The Engineer shall layout the area to be milled. The area shall be laid out with straightedges in increments of 1-foot widths. The area to be milled shall cover only the failed area. Any excessive area that is milled because the Contractor doesn't have the appropriate machine, or areas that are damaged because of his negligence, shall not be included in the measurement for payment.

b. Profiling, Grade Correction, or Surface Correction: The machine shall have a minimum width of 10 feet. It shall be equipped with electronic grade control devices on both sides that will cut the surface to the grade and tolerances specified. The machine shall cut vertical edges. A positive method of dust control shall be provided. The machine shall be capable of discharging the millings in a truck or leaving them in a defined windrow.

METHOD OF MEASUREMENT

101-4.1. MEASUREMENT.

a. General: If there is no quantity shown in the bidding schedule, the work covered by this section shall be considered as a subsidiary obligation of the Contractor covered under the other contract items. Only accepted work will be measured.

b. Pavement Removal: The unit of measurement for pavement removal shall be the number of square yards removed by the Contractor. Any pavement removed outside the limits of removal because the pavement was damaged by negligence on the part of the Contractor shall not be included in the measurement for payment.

c. Joint and Crack Repair: The unit of measurement for joint and crack repair shall be the linear foot of joint.

d. Paint and Rubber Removal: The unit of measurement for paint and rubber removal shall be the square foot.

e. Spall and Failed Asphaltic Concrete Pavement Repair:

(1) The unit of measure for concrete spall repair shall be the number of square feet. The average depth of the patch shall be agreed upon by the Contractor and the Resident Engineer. The quantity shall be divided in the following categories:

(a) 0 to 4 inches in average depth.

(b) 4 to 8 inches in average depth.

(c) Greater than 8 inches in average depth.

(2) The unit of measure for failed asphaltic concrete pavement shall be as follow:

(a) Asphaltic Concrete Square Yards.

(b) Base Course Square Yards.

(c) Subbase Course Square Yards.

(d) Subgrade Square Yards.

f. Cold Planing: The unit of measure for cold planing shall be the number square yards. The average depth of the cold planing shall be determined by the Engineer and the Contractor prior to accomplishment of the work. When surface correction is required, if the initial cut doesn't correct the condition, the Contractor shall re-plane the area and will be paid only once for the total depth of planning. The quantity shall be divided into the following categories:

(a) 0 to 2 inches

(b) 0 to 3 inches

(c) 0 to 4 inches

(d) 0 to 5 inches

(e) 0 to 6 inches

BASIS OF PAYMENT

101-5.1 PAYMENT. Payment shall be made at contract unit price for the unit of measurement as specified hereinbefore. This price shall be full compensation for furnishing all materials and for all preparation, hauling, and placing of the material and for all labor, equipment, tools, and incidentals necessary to complete this item.

END OF ITEM P-101

ITEM P-151 CLEARING AND GRUBBING

DESCRIPTION

151-1.1 This item shall consist of clearing or clearing and grubbing, including the disposal of materials, for all areas within the limits designated on the plans or as required by the Engineer.

Clearing shall consist of the cutting and removal of all trees, stumps, brush, logs, hedges, the removal of fences and other loose or projecting material from the designated areas. The grubbing of stumps and roots will not be required.

Clearing, when so designated, shall consist of the cutting and removal of isolated single trees or isolated groups of trees. The cutting of all the trees of this classification shall be in accordance with the requirements for the particular area being cleared, or as shown on the plans, or as directed by the Engineer. The trees shall be considered isolated when they are 40 feet (12 m) or more apart, with the exception of a small clump of approximately five trees or less.

Clearing and grubbing shall consist of clearing the surface of the ground of the designated areas of all trees, stumps, down timber, logs, snags, brush, undergrowth, hedges, heavy growth of grass or weeds, fences, structures, debris, and rubbish of any nature, natural obstructions or such material which in the opinion of the Engineer is unsuitable for the foundation of strips, pavements, or other required structures, including the grubbing of stumps, roots, matted roots, foundations, and the disposal from the project of all spoil materials resulting from clearing and grubbing by burning or otherwise.

CONSTRUCTION METHODS

151-2.1 GENERAL. The areas denoted on the plans to be cleared or cleared and grubbed shall be staked on the ground by the Engineer. The clearing and grubbing shall be done at a satisfactory distance in advance of the grading operations.

All spoil materials removed by clearing or by clearing and grubbing shall be disposed of by burning, when permitted by local laws, or by removal to approved disposal areas. When burning of material is permitted, it shall be burned under the constant care of competent watchmen so that the surrounding vegetation and other adjacent property will not be jeopardized. Burning shall be done in accordance with all applicable laws, ordinances, and regulations. Before starting any burning operations, the Contractor shall notify the agency having jurisdiction.

As far as practicable, waste concrete and masonry shall be placed on slopes of embankments or channels. When embankments are constructed of such material, this material shall be placed in accordance with requirements for formation of embankments. Any broken concrete or masonry that cannot be used in construction, and all other materials not considered suitable for use elsewhere, shall be disposed of by the Contractor. In no case shall any discarded materials be left in windrows or piles adjacent to or within the airport limits. The manner and location of disposal of materials shall be subject to the approval of the Engineer and shall not create an unsightly or objectionable view. When the Contractor is required to locate a disposal area outside the airport property limits at his/her own expense, he shall obtain and file with the Engineer, permission in writing from the property owner for the use of private property for this purpose.

If the plans or the specifications require the saving of merchantable timber, the Contractor shall trim the limbs and tops from designated trees, saw them into suitable lengths, and make the material available for removal by other agencies.

Any blasting necessary shall be done at the Contractor's responsibility, and the utmost care shall be taken not to endanger life or property.

The removal of existing structure and utilities required to permit orderly progress of work shall be accomplished by local agencies, unless otherwise shown on the plans. Whenever a telephone or telegraph pole, pipeline, conduit, sewer, roadway, or other utility is encountered and must be removed or relocated, the Contractor shall advise the Engineer who will notify the proper local authority or owner and attempt to secure prompt action.

151-2.2 CLEARING. The Contractor shall clear the staked or indicated area of all objectionable materials. Trees unavoidably falling outside the specified limits must be cut up, removed, and disposed of in a satisfactory manner. In order to minimize damage to trees that are to be left standing, trees shall be felled toward the center of area being cleared. The Contractor shall preserve and protect from injury all trees not to be removed. The trees, stumps, and brush shall be cut to a height of not more than 12 inches (300 mm) above the ground. The grubbing of stumps and roots will not be required.

When isolated trees are designated for clearing, the trees shall be classed in accordance with the butt diameter size as measured at a point 18 inches (45 cm) above the ground level or at a designated height specified in the proposal.

Fences shall be removed and disposed of when directed by the Engineer. Fence wire shall be neatly rolled and the wire and posts stored on the airport if they are to be used again, or stored at a designated location if the fence is to remain the property of a local owner or of a civic authority.

151-2.3 CLEARING AND GRUBBING. In areas designated to be cleared and grubbed, all stumps, roots, buried logs, brush, grass, and other unsatisfactory materials shall be removed, except where embankments exceeding 3-1/2 feet (105 cm) in depth are to be made outside of paved areas. In cases where such depth of embankments is to be made, all unsatisfactory materials shall be removed, but sound trees, stumps, and brush can be cut off within 6 inches (150 mm) above the ground and allowed to remain. Tap roots and other projections over 1-1/2 inches (37 mm) in diameter shall be grubbed out to a depth of at least 18 inches (45 cm) below the finished subgrade or slope elevation.

Any buildings and miscellaneous structures that are shown on the plans to be removed shall be demolished or removed, and all materials there from shall be disposed of either by burning or otherwise removed from the site. The remaining or existing foundations, wells, cesspools, and all like structures shall be destroyed by breaking out or breaking down the materials of which the foundations, wells, cesspools, etc., are built to a depth at least 2 feet (60 cm) below the existing surrounding ground. Any broken concrete, blocks, or other objectionable material that cannot be used in backfill shall be removed and disposed of. The holes or openings shall be backfilled with acceptable material and properly compacted.

All holes remaining after the grubbing operation in embankment areas shall have the sides broken down to flatten out the slopes, and shall be filled with acceptable material, moistened and properly compacted in layers to the density required in Item P-152. The same construction procedure shall be applied to all holes remaining after grubbing in excavation areas where the depth of holes exceeds the depth of the proposed excavation.

METHOD OF MEASUREMENT

151-3.1 The quantities of clearing or clearing and grubbing as shown by the limits on the plans or as ordered by the Engineer shall be the number of acres (square meters) or fractions thereof, of land specifically cleared or cleared and grubbed.

When isolated trees are designated for clearing, the quantities of trees, as determined in accordance with ranges of butt diameter size, measured at a point 18 inches (45 cm) above the ground level at the tree, shall be paid for according to the schedule of sizes as follows:

The number of trees:

From 0 to 2-1/2 feet (75 cm), butt diameter
From 2-1/2 to 5 feet (75 to 150 cm), butt diameter
For 5 feet (150 cm) or more, butt diameter

BASIS OF PAYMENT

151-4.1 Payment shall be made at the contract unit price per acre (square meter) for clearing. This price shall be full compensation for furnishing all materials and for all labor, equipment, tools, and incidentals necessary to complete the item.

151-4.2 Payment shall be made at the contract unit price for clearing isolated trees. This price shall be full compensation for furnishing all materials and for all labor, equipment, tools, and incidentals necessary to complete the item.

151-4.3 Payment shall be made at the contract unit price per acre (square meter) for clearing and grubbing. This price shall be full compensation for furnishing all materials and for all labor, equipment, tools, and incidentals necessary to complete the item.

Payment will be made under:

Item P-151-4.1 Clearing—per acre (square meter)
Item P-151-4.2 Clearing for isolated trees:
From 0 to 2-1/2 feet (75 cm) butt diameter, per tree
From 2-1/2 to 5 feet (75 to 150 cm) butt diameter, per tree
For 5 feet (150 cm) or more butt diameter, per tree
Item P-151-4.3 Clearing and grubbing—per acre (square meter)

END OF ITEM P-151

Intentionally Left Blank

ITEM P-152 EXCAVATION AND EMBANKMENT

DESCRIPTION

152-1.1 This item covers excavation, disposal, placement, and compaction of all materials within the limits of the work required to construct safety areas, runways, taxiways, aprons, and intermediate as well as other areas for drainage, building construction, parking, or other purposes in accordance with these specifications and in conformity to the dimensions and typical section(s) shown on the plans.

152-1.2 CLASSIFICATION. All material excavated shall be classified as defined below:

a. Unclassified Excavation. Unclassified excavation shall consist of the excavation and disposal of all material, regardless of its nature, which is not otherwise classified and paid for under the following items.

b. Rock Excavation. Rock excavation shall include all solid rock in ledges, in bedded deposits, in unstratified masses, and conglomerate deposits which are so firmly cemented they cannot be removed without blasting or using rippers. All boulders containing a volume of more than 1/2 cubic yard (0.4 cubic meter) will be classified as ``rock excavation."

c. Muck Excavation. Muck excavation shall consist of the removal and disposal of deposits or mixtures of soils and organic matter not suitable for foundation material. Muck shall include materials that will decay or produce subsidence in the embankment. It may be made up of decaying stumps, roots, logs, humus, or other material not satisfactory for incorporation in the embankment.

d. Drainage Excavation. Drainage excavation shall consist of all excavation made for the primary purpose of drainage and includes drainage ditches, such as intercepting, inlet or outlet; temporary levee construction; or any other type as shown on the plans.

e. Borrow Excavation. Borrow excavation shall consist of approved material required for the construction of embankment or for other portions of the work in excess of the quantity of usable material available from required excavations. Borrow material shall be obtained from areas within the limits of the airport property but outside the normal limits of necessary grading, or from areas outside the airport.

* * * *

When the Contractor's excavating operations encounter artifacts of historical or archaeological significance, the operations shall be temporarily discontinued. At the direction of the Engineer, the Contractor shall excavate the site in such a manner as to preserve the artifacts encountered and allow for their removal. Such excavation will be paid for as extra work.

Those areas outside of the pavement areas in which the top layer of soil material has become compacted, by hauling or other activities of the Contractor shall be scarified and disked to a depth of 4 inches (100 mm), in order to loosen and pulverize the soil.

If it is necessary to interrupt existing surface drainage, sewers or under-drainage, conduits, utilities, or similar underground structures, the Contractor shall be responsible for and shall take all necessary precautions to preserve them or provide temporary services. When such facilities are encountered, the Contractor shall notify the Engineer, who shall arrange for their removal if necessary. The Contractor shall, at his/her own expense, satisfactorily repair or pay the cost of all damage to such facilities or structures that may result from any of the Contractor's operations during the period of the contract.

152-2.2 EXCAVATION. No excavation shall be started until the work has been staked out by the Contractor and the Engineer has obtained elevations and measurements of the ground surface. All suitable excavated material shall be used in the formation of embankment, subgrade, or for other purposes shown on the plans. All unsuitable material shall be disposed of as shown on the plans.

When the volume of the excavation exceeds that required to construct the embankments to the grades indicated, the excess shall be used to grade the areas of ultimate development or disposed of as directed. When the volume of excavation is not sufficient for constructing the fill to the grades indicated, the deficiency shall be obtained from borrow areas.

The grade shall be maintained so that the surface is well drained at all times. When necessary, temporary drains and drainage ditches shall be installed to intercept or divert surface water that may affect the work.

a. Selective Grading. When selective grading is indicated on the plans, the more suitable material as designated by the Engineer shall be used in constructing the embankment or in capping the pavement subgrade. If, at the time of excavation, it is not possible to place this material in its final location, it shall be stockpiled in approved areas so that it can be measured for payment for rehandling as specified in paragraph 3.3.

b. Undercutting. Rock, shale, hardpan, loose rock, boulders, or other material unsatisfactory for safety areas, subgrades, roads, shoulders, or any areas intended for turfing shall be excavated to a minimum depth of 12 inches (300 mm), or to the depth specified by the Engineer, below the subgrade. Muck, peat, matted roots, or other yielding material, unsatisfactory for subgrade foundation, shall be removed to the depth specified. Unsuitable materials shall be disposed of at locations shown on the plans. This excavated material shall be paid for at the contract unit price per cubic yard (per cubic meter) for **[ ]**. The excavated area shall be refilled with suitable material obtained from the grading operations or borrow areas and compacted to specified densities. The necessary refilling will constitute a part of the embankment. Where rock cuts are made and refilled with selected material, any pockets created in the rock surface shall be drained in accordance with the details shown on the plans.

* * * *

material was unavoidable and his/her decision shall be final. All overbreak shall be graded or removed by the Contractor and disposed of as directed; however, payment will not be made for the removal and disposal of overbreak that the Engineer determines as avoidable. Unavoidable overbreak will be classified as ``Unclassified Excavation."

d. Removal of Utilities. The removal of existing structures and utilities required to permit the orderly progress of work will be accomplished by someone other than the Contractor, e.g., the utility unless otherwise shown on the plans. All existing foundations shall be excavated for at least 2 feet (60 cm) below the top of subgrade or as indicated on the plans, and the material disposed of as directed. All foundations thus excavated shall be backfilled with suitable material and compacted as specified herein.

e. Compaction Requirements. The subgrade under areas to be paved shall be compacted to a depth of **[ ]** and to a density of not less than **[ ]** percent of the maximum density as determined by ASTM **[ ].** The material to be compacted shall be within +/- 2 percent of optimum moisture content before rolled to obtain the prescribed compaction (except for expansive soils).

* * * *

In cuts, all loose or protruding rocks on the back slopes shall be barred loose or otherwise removed to line of finished grade of slope. All cut-and-fill slopes shall be uniformly dressed to the slope, cross section, and alignment shown on the plans or as directed by the Engineer.

Blasting will be permitted only when proper precautions are taken for the safety of all persons, the work, and the property. All damage done to the work or property shall be repaired at the Contractor's expense. All operations of the Contractor in connection with the transportation, storage, and use of explosives shall conform to all state and local regulations and explosive manufacturers' instructions, with applicable approved permits reviewed by the Engineer. Any approval given, however, will not relieve the Contractor of his/her responsibility in blasting operations.

Where blasting is approved, the Contractor shall employ a vibration consultant, approved by the Engineer, to advise on explosive charge weights per delay and to analyze records from seismograph recordings. The seismograph shall be capable of producing a permanent record of the three components of the motion in terms of particle velocity, and in addition shall be capable of internal dynamic calibration.

In each distinct blasting area, where pertinent factors affecting blast vibrations and their effects in the area remain the same, the Contractor shall submit a blasting plan of the initial blasts to the Engineer for approval. This plan must consist of hole size, depth, spacing, burden, type of explosives, type of delay sequence, maximum amount of explosive on any one delay period, depth of rock, and depth of overburden if any. The maximum explosive charge weights per delay included in the plan shall not be increased without the approval of the engineering.

The Contractor shall keep a record of each blast fired—its date, time and location; the amount of explosives used, maximum explosive charge weight per delay period, and, where necessary, seismograph records identified by instrument number and location.

These records shall be made available to the Engineer on a monthly basis or in tabulated form at other times as required.

152-2.3 BORROW EXCAVATION. Borrow area(s) within the airport property are indicated on the plans. Borrow excavation shall be made only at these designated locations and within the horizontal and vertical limits as staked or as directed.

When borrow sources are outside the boundaries of the airport property, it shall be the Contractor's responsibility to locate and obtain the supply, subject to the approval of the Engineer. The Contractor shall notify the Engineer, at least 15 days prior to beginning the excavation, so necessary measurements and tests can be made. All unsuitable material shall be disposed of by the Contractor. All borrow pits shall be opened up to expose the vertical face of various strata of acceptable material to enable obtaining a uniform product. Borrow pits shall be excavated to regular lines to permit accurate measurements, and they shall be drained and left in a neat, presentable condition with all slopes dressed uniformly.

152-2.4 DRAINAGE EXCAVATION. Drainage excavation shall consist of excavating for drainage ditches such as intercepting; inlet or outlet, for temporary levee construction; or for any other type as designed or as shown on the plans. The work shall be performed in the proper sequence with the other construction. All satisfactory material shall be placed in fills; unsuitable material shall be placed in waste areas or as directed. Intercepting ditches shall be constructed prior to starting adjacent excavation operations. All necessary work shall be performed to secure a finish true to line, elevation, and cross section.

The Contractor shall maintain ditches constructed on the project to the required cross section and shall keep them free of debris or obstructions until the project is accepted.

152-2.5 PREPARATION OF EMBANKMENT AREA. Where an embankment is to be constructed to a height of 4 feet (120 cm) or less, all sod and vegetable matter shall be removed from the surface upon which the embankment is to be placed, and the cleared surface shall be completely broken up by plowing or scarifying to a minimum depth of 6 inches (150 mm). This area shall then be compacted as indicated in paragraph 2.6. When the

height of fill is greater than 4 feet (120 cm), sod not required to be removed shall be thoroughly disked and recompacted to the density of the surrounding ground before construction of embankment.

Where embankments are to be placed on natural slopes steeper than 3 to 1, horizontal benches shall be constructed as shown on the plans.

* * * *

Include testing frequencies per square yard for density & moisture acceptance tests.

AASHTO T99 or T-180 (Moisture-Density) should be specified for soils that are expected to have more than 30% retained on the 3/4-inch sieve. The moisture-density relationship test procedures ASTM D 698 and D1557 are not applicable for materials with greater than 30 retained on the 3/4-inch sieve. A replacement procedure (ASTM D 4718) for the coarse material (greater than 3/4-inch) is used with ASTM methods but only until up to 30 percent is retained. Maximum density testing (ASTM D 4253) may be used but it also limits the material retained on the 1-1/2-inch sieve to 30 percent. The AASHTO T-99 and T-180 are similar to ASTM D 698 and D 1557, except they do not limit the replacement of the coarse material.

* * * *

directed and every effort shall be exerted to fill the voids with the finer material forming a dense, compact mass. Rock or boulders shall not be disposed of outside the excavation or embankment areas, except at places and in the manner designated by the Engineer.

When the excavated material consists predominantly of rock fragments of such size that the material cannot be placed in layers of the prescribed thickness without crushing, pulverizing or further breaking down the pieces, such material may be placed in the embankment as directed in layers not exceeding 2 feet (60 cm) in thickness. Each layer shall be leveled and smoothed with suitable leveling equipment and by distribution of spalls and finer fragments of rock. These type lifts shall not be constructed above an elevation 4 feet (120 cm) below the finished subgrade.

Frozen material shall not be placed in the embankment nor shall embankment be placed upon frozen material.

There will be no separate measurement of payment for compacted embankment, and all costs incidental to placing in layers, compacting, disking, watering, mixing, sloping, and other necessary operations for construction of embankments will be included in the contract price for excavation, borrow, or other items.

* * * *

152-2.10 TOPSOIL. When topsoil is specified or required as shown on the plans or under Item T-905, it shall be salvaged from stripping or other grading operations. The topsoil shall meet the requirements of Item T-905. If, at the time of excavation or stripping, the topsoil cannot be placed in its proper and final section of finished construction, the material shall be stockpiled at approved locations. Stockpiles shall not be placed within **[ ]** feet of runway pavement or **[ ]** feet of taxiway pavement and shall not be placed on areas that subsequently will require any excavation or embankment. If, in the judgment of the Engineer, it is practical to place the salvaged topsoil at the time of excavation or stripping, the material shall be placed in its final position without stockpiling or further rehandling.

* * * *

[embankment] shall be verified by the Engineer by means of field cross sections taken randomly at intervals not exceeding 500 linear feet (150 meters).

Final field cross sections shall be employed if the following changes have been made:

a. Plan width of embankments or excavations are changed by more than plus or minus 1.0 foot (0.3 meter); or

b. Plan elevations of embankments or excavations are changed by more than plus or minus 0.5 foot (0.15 meter).

BASIS OF PAYMENT

152-4.1 For ``Unclassified excavation" payment shall be made at the contract unit price per cubic yard (cubic meter). This price shall be full compensation for furnishing all materials, labor, equipment, tools, and incidentals necessary to complete the item.

152-4.2 For ``Rock Excavation" payment shall be made at the contract unit price per cubic yard (cubic meter). This price shall be full compensation for furnishing all materials, labor, equipment, tools, and incidentals necessary to complete the item.

152-4.3 For ``Muck Excavation" payment shall be made at the contract unit price per cubic yard (cubic meter). This price shall be full compensation for furnishing all materials, labor, equipment, tools, and incidentals necessary to complete the item.

152-4.4 For ``Drainage Excavation" payment shall be made at the contract unit price per cubic yard (cubic meter). This price shall be full compensation for furnishing all materials, labor, equipment, tools, and incidentals necessary to complete the item.

152-4.5 For ``Borrow Excavation" payment shall be made at the contract unit price per cubic yard (cubic meter). This price shall be full compensation for furnishing all materials, labor, equipment, tools, and incidentals necessary to complete the item.

152-4.6 For ``Stockpiled Material" payment shall be made at the contract unit price per cubic yard (cubic meter). This price shall be full compensation for furnishing all materials, labor, equipment, tools, and incidentals necessary to complete the item.

152-4.7 For ``Embankment in Place" payment shall be made at the contract unit price per cubic yard (cubic meter). This price shall be full compensation for furnishing all materials, labor, equipment, tools, and incidentals necessary to complete the item.

Payment will be made under:

Item P-152-4.1 Unclassified Excavation—per cubic yard (cubic meter)

Item P-152-4.2 Rock Excavation—per cubic yard (cubic meter)

Item P-152-4.3 Muck Excavation—per cubic yard (cubic meter)

Item P-152-4.4 Drainage Excavation—per cubic yard (cubic meter)

Item P-152-4.5 Borrow Excavation—per cubic yard (cubic meter)

Item P-152-4.6 Stockpiled material—per cubic yard (cubic meter)

Item P-152-4.7 Embankment in Place—per cubic yard (cubic meter)

* * * *

ITEM P-153 CONTROLLED LOW-STRENGTH MATERIAL (CLSM)

DESCRIPTION

153.1.1 This item shall consist of furnishing, transporting, and placing a controlled low-strength material (CLSM) as flowable backfill in trenches or at other locations shown on the plans or as directed by the Engineer.

MATERIALS

153-2.1 MATERIALS

a. Portland Cement. Portland cement shall conform to the requirements of ASTM **[ ]** Type **[ ]**. If for any reason, cement becomes partially set or contains lumps of caked cement, it shall be rejected. Cement salvaged from discarded or used bags shall not be used.

* * * *

b. Consistency. Consistency of the fresh mixture shall be such that the mixture may be placed without segregation. A desired consistency may be approximated by filling an open-ended three-inch (75 mm) diameter cylinder, six inches (150 mm) high to the top, with the mixture and the cylinder immediately pulled straight up. The correct consistency of the mixture will produce an approximate eight-inch (205 mm) diameter circular-type spread without segregation. Adjustments of the proportions of materials should be made to achieve proper solid suspension and flowable characteristics, however the theoretical yield shall be maintained at one cubic yard (cubic meter) for the given batch weights.

CONSTRUCTION METHODS

153-4.1 PLACEMENT.

a. Placement. CLSM may be placed by any reasonable means from a mixing unit into the space to be filled. Agitation is required during transportation and waiting time. Placement shall be performed in such a manner that structures or pipes are not displaced from their desired final position and intrusion of CLSM into undesirable areas is avoided. The material shall be brought up uniformly to the fill line shown on the plans or as directed to the Engineer. Each placement of CLSM shall be as continuous an operation as possible. If CLSM is placed in more than one layer, the base layer shall be free of surface water and loose of foreign material prior to placement of the next layer.

b. Limitations of Placement. CLSM shall not be placed on frozen ground. Mixing and placing may begin when the air or ground temperature is at least 35 degrees F (2 degrees C) and rising. At the time of placement, CLSM shall have a temperature of at least 40 degrees F (4 degrees C). Mixing and placement shall stop when the air temperature is 40 degrees F (4 degrees C) and falling or when the anticipated air or ground temperature will be 35 degrees F (2 degrees C) or less in the 24 hour period following proposed placement.

153-4.2 CURING AND PROTECTION

a. Curing. The air in contact with the CLSM should be maintained at temperatures above freezing for a minimum of 72 hours. If the CLSM is subjected to temperatures below 32 degrees F (0 degrees C), the material may be rejected by the Engineer if damage to the material is observed.

b. Protection. The CLSM shall not be subject to loads and shall remain undisturbed by construction activities for a period of 48 hours or until a compressive strength of 15 psi (105 kPa) is obtained. The Contractor shall be responsible for providing evidence to the Engineer that the material has reached the desired strength. Acceptable evidence shall be based upon compressive tests made in accordance with paragraph 153-3.1a.

MATERIAL ACCEPTANCE

153-5.1 Acceptance. Acceptance of CLSM delivered and placed as shown on the plans or as directed by the Engineer shall be based upon mix design approval and batch tickets provided by the Contractor to confirm that the delivered material conforms to the mix design. The Contractor shall verify by additional testing, each 5,000 cubic yards (3,825 cubic meters) of material used. Verification shall include confirmation of material proportions and tests of compressive strength to confirm that the material meets the original mix design and the requirements of CLSM as defined in this specification. Adjustments shall be made as necessary to the proportions and materials prior to further production.

METHOD OF MEASUREMENT

153-6.1 Measurement. Controlled low strength material shall be measured by the number of **[cubic yards (cubic meters)]** as computed from the neatline plan and section, adjusted for the quantities for any embedments, and as specified, completed, and accepted..

BASIS OF PAYMENT

153-7.1 Payment. Accepted quantities of controlled low strength material shall be paid for at the contract unit price per **[cubic yard (cubic meter)]**. Payment shall be full compensation for all materials, equipment, labor, and incidentals required to complete the work as specified.

TESTING REQUIREMENTS

ASTM C 31	Making and Curing Concrete Test Specimens in the Field
ASTM C 39	Compressive Strength of Cylindrical Concrete

MATERIAL REQUIREMENTS

ASTM C 33	Specification for Concrete Aggregates
ASTM C 150	Specification for Portland Cement
ASTM C 618	Specification for Coal Fly Ash and Raw or Calcined Natural Pozzolan for Use as a Mineral Admixture in Concrete
ASTM C 595	Specification for Blended Hydraulic Cements

END OF ITEM P-153

Intentionally Left Blank

ITEM P-154 SUBBASE COURSE

DESCRIPTION

154-1.1 This item shall consist of a subbase course composed of granular materials constructed on a prepared subgrade or underlying course in accordance with these specifications, and in conformity with the dimensions and typical cross section shown on the plans.

MATERIALS

154-2.1 MATERIALS. The subbase material shall consist of hard durable particles or fragments of granular aggregates. This material will be mixed or blended with fine sand, clay, stone dust, or other similar binding or filler materials produced from approved sources. This mixture must be uniform and shall comply with the requirements of these specifications as to gradation, soil constants, and shall be capable of being compacted into a dense and stable subbase. The material shall be free from vegetable matter, lumps or excessive amounts of clay, and other objectionable or foreign substances. Pit-run material may be used, provided the material meets the requirements specified.

TABLE 1. GRADATION REQUIREMENTS

Sieve designation (square openings) as per ASTM C 136 and ASTM D 422	Percentage by weight passing sieves
3 inch (75.0 mm)	100
No. 10 (2.0 mm)	20-100
No. 40 (0.450 mm)	5-60
No. 200 (0.075 mm)	0-8

The portion of the material passing the No. 40 (0.450 mm) sieve shall have a liquid limit of not more than 25 and a plasticity index of not more than 6 when tested in accordance with ASTM D 4318.

The maximum amount of material finer than 0.02 mm in diameter shall be less than 3%.

* * * *

from pits or sources that have been approved. The material in the pits shall be excavated and handled in such manner that a uniform and satisfactory product can be secured.

154-3.3 PREPARING UNDERLYING COURSE. Before any subbase material is placed, the underlying course shall be prepared and conditioned as specified. The course shall be checked and accepted by the Engineer before placing and spreading operations are started.

To protect the subgrade and to ensure proper drainage, the spreading of the subbase shall begin along the centerline of the pavement on a crowned section or on the high side of pavements with a one-way slope.

154-3.4 MATERIALS ACCEPTANCE IN EXISTING CONDITION. When the entire subbase material is secured in a uniform and satisfactory condition and contains approximately the required moisture, such approved material may be moved directly to the spreading equipment for placing. The material may be obtained from gravel pits, stockpiles, or may be produced from a crushing and screening plant with the proper blending. The materials from these sources shall meet the requirements for gradation, quality, and consistency. It is the intent of this section of the specifications to secure materials that will not require further mixing. The moisture content of the material shall be approximately that required to obtain maximum density. Any minor deficiency or excess of moisture may be corrected by surface sprinkling or by aeration. In such instances, some mixing or manipulation may be required, immediately preceding the rolling, to obtain the required moisture content. The final operation shall be blading or dragging, if necessary, to obtain a smooth uniform surface true to line and grade.

154-3.5 PLANT MIXING. When materials from several sources are to be blended and mixed, the subbase material shall be processed in a central or travel mixing plant. The subbase material, together with any blended material, shall be thoroughly mixed with the required amount of water. After the mixing is complete, the material shall be transported to and spread on the underlying course without undue loss of the moisture content.

154-3.5.1 MIXED IN PLACE. When materials from different sources are to be proportioned and mixed or blended in place, the relative proportions of the components of the mixture shall be as designated by the Engineer.

The subbase material shall be deposited and spread evenly to a uniform thickness and width. Then the binder, filler or other material shall be deposited and spread evenly over the first layer. There shall be as many layers of materials added as the Engineer may direct to obtain the required subbase mixture.

When the required amount of materials have been placed, they shall be thoroughly mixed and blended by means of graders, discs, harrows, rotary tillers, supplemented by other suitable equipment if necessary. The mixing shall continue until the mixture is uniform throughout. Areas of segregated material shall be corrected by the addition of binder or filler material and by thorough remixing. Water in the amount and as directed by the Engineer shall be uniformly applied prior to and during the mixing operations, if necessary, to maintain the material at its required moisture content. When the mixing and blending has been completed, the material shall be spread in a uniform layer which, when compacted, will meet the requirements of thickness and typical cross section.

* * * *

When more than one layer is required, the construction procedure described herein shall apply similarly to each layer.

During the placing and spreading, sufficient caution shall be exercised to prevent the incorporation of subgrade, shoulder, or foreign material in the subbase course mixture.

154-3.7 FINISHING AND COMPACTING. After spreading or mixing, the subbase material shall be thoroughly compacted by rolling and sprinkling, when necessary. Sufficient rollers shall be furnished to adequately handle the rate of placing and spreading of the subbase course.

The field density of the compacted material shall be at least 100 percent of the maximum density of laboratory specimens prepared from samples of the subbase material delivered to the jobsite. The laboratory specimens shall be compacted and tested in accordance with **[ ]**. The in-place field density shall be determined in accordance with ASTM D 1556 or ASTM D 2922. The moisture content of the material at the start of compaction shall not be below nor more than 2 percentage points above the optimum moisture content.

* * * *

154-3.8 SURFACE TEST. After the course is completely compacted, the surface shall be tested for smoothness and accuracy of grade and crown; any portion found to lack the required smoothness or to fail in accuracy of grade or crown shall be scarified, reshaped, recompacted, and otherwise manipulated as the Engineer may direct until the required smoothness and accuracy re obtained. The finished surface shall not vary more than 1/2 inch (12 mm) when tested with a 16-foot (4.8 m) straightedge applied parallel with, and at right angles to, the centerline.

154-3.9 THICKNESS. The thickness of the completed subbase course shall be determined by depth tests or sample holes taken at intervals so each test shall represent no more than 500 square yards (420 square meters). When the deficiency in thickness is more than 1/2 inch (12 mm), the Contractor shall correct such areas by scarifying, adding satisfactory mixture, rolling, sprinkling, reshaping, and finishing in accordance with these specifications. The Contractor shall replace at his/her expense the subbase material where borings are taken for test purposes.

* * * *

ASTM D 698	Moisture-Density Relations of Soils and Soil-Aggregate Mixtures Using 5.5 lb (2.49 kg) Rammer and 12-in (305 mm) Drop
ASTM D 1556	Density of Soil in Place by the Sand-Cone Method
ASTM D 1557	Test for Laboratory Compaction Characteristics of Soil Using Modified Effort
ASTM D 2922	Density of Soil in Place by the Nuclear Density Method
ASTM D 4318	Liquid Limit, Plastic Limit, and Plasticity Index of Soils

END OF ITEM P-154

Intentionally Left Blank

ITEM P-155 LIME-TREATED SUBGRADE

* * * *

155-2.4 SOIL. The soil for this work shall consist of materials on the site or selected materials from other sources and shall be uniform in quality and gradation, and shall be approved by the Engineer. The soil shall be free of roots, sod, weeds, and stones larger than 2-1/2 inches (60 mm).

COMPOSITION

155-3.1 LIME. Lime shall be applied at the rate specified on the plans for the depth of subgrade treatment shown.

* * * *

lime treatment) and removed or windrowed to expose the secondary grade. Any wet or unstable materials below the secondary grade shall be corrected, as directed by the Engineer, by scarifying, adding lime, and compacting until it is of uniform stability. The excavated material shall then be spread to the desired cross section.

If the Contractor elects to use a cutting and pulverizing machine that will remove the subgrade material accurately to the secondary grade and pulverize the material at the same time, he will not be required to expose the secondary grade nor windrow the material. However, the Contractor shall be required to roll the subgrade, as directed by the Engineer, and correct any soft areas that this rolling may reveal before using the pulverizing machine. This method will be permitted only where a machine is provided which will ensure that the material is cut uniformly to the proper depth and which has cutters that will plane the secondary grade to a smooth surface over the entire width of the cut. The machine must give visible indication at all times that it is cutting to the proper depth.

155-6.2 APPLICATION. Lime shall be spread only on that area where the first mixing operations can be completed during the same working day. The application and mixing of lime with the soil shall be accomplished by the methods hereinafter described as ``Dry Placing" or ``Slurry Placing." When hydrated lime is specified, the Contractor may use either method.

a. Dry Placing. The lime shall be spread uniformly over the top of the subgrade by an approved screw-type spreader box or other approved spreading equipment. The amount of lime spread shall be the amount required for mixing to the specified depth that will result in the percentage determined in the job mix formula.

The lime shall be distributed in such manner that scattering by wind will be minimal. Lime shall not be applied when wind conditions, in the opinion of the Engineer, are detrimental to a proper application. A motor grader shall not be used to spread the lime. The material shall be sprinkled, as directed by the Engineer, until the proper moisture content has been reached.

b. Slurry Placing. The lime shall be mixed with water in trucks with approved distributors and applied as a thin water suspension or slurry. Commercial lime slurry shall be applied with a lime percentage not less than that applicable for the grade used. The distribution of lime shall be attained by successive passes over a measured section of subgrade until the proper amount of lime has been spread. The amount of lime spread shall be the amount required for mixing to the specified depth that will result in the percentage determined in the job mix formula. The distributor truck shall continually agitate the slurry to keep the mixture uniform.

155-6.3 MIXING. The mixing procedure shall be the same for ``Dry Placing" or ``Slurry Placing" as hereinafter described:

a. First Mixing. The full depth of the treated subgrade shall be mixed with an approved mixing machine. Lime shall not be left exposed for more than 6 hours. The mixing machine shall make two coverages. Water shall be added to the subgrade during mixing to provide a moisture content above the optimum moisture of the material and to ensure chemical action of the lime and subgrade. After mixing, the subgrade shall be lightly rolled to seal the surface and help prevent evaporation of moisture. The water content of the subgrade mixture shall be maintained at a moisture content above the optimum moisture content for a minimum of 48 hours or until the material becomes friable. During the curing period, the material shall be sprinkled as directed. During the interval of time between application and mixing, lime that has been exposed to the open air for 6 hours or more, or to excessive loss due to washing or blowing will not be accepted for payment.

b. Final Mixing. After the required curing time, the material shall be uniformly mixed by approved methods. If the mixture contains clods, they shall be reduced in size by blading, discing, harrowing, scarifying, or the use of other approved pulverization methods so that the remainder of the clods shall meet the following requirements when tested dry by laboratory sieves:

	Percent
Minimum of clods passing 1-1/2\ inch sieve	100
Minimum of clods passing No. 4 sieve	60

155-6.4 COMPACTION. Compaction of the mixture shall begin immediately after final mixing. The material shall be aerated or sprinkled as necessary to provide optimum moisture. The field density of the compacted mixture shall be at least 93 percent of the maximum density of laboratory specimens prepared from samples taken from the material in place. The specimens shall be compacted and tested in accordance with ASTM D 698. The in-place field density shall be determined in accordance with ASTM D 1556 or ASTM D 2922. Any mixture that has not been compacted shall not be left undisturbed for more than 30 minutes. The moisture content of the mixture at the start of compaction shall not be below nor more than 2 percentage points above the optimum moisture content. The optimum moisture content shall be determined in accordance with ASTM D 698 and shall be less than that amount which will cause the mixture to become unstable during compaction and finishing.

The material shall be sprinkled and rolled as directed by the Engineer. All irregularities, depressions, or weak spots that develop shall be corrected immediately by scarifying the areas affected, adding or removing material as required, and reshaping and recompacting by sprinkling and rolling. The surface of the course shall be maintained in a smooth condition, free from undulations and ruts, until other work is placed thereon or the work is accepted.

In addition to the requirements specified for density, the full depth of the material shown on the plans shall be compacted to the extent necessary to remain firm and stable under construction equipment. After each section is completed, tests will be made by the Engineer. If the material fails to meet the density requirements, it shall be reworked to meet these requirements. Throughout this entire operation, the shape of the course shall be maintained by blading, and the surface upon completion shall be smooth and shall conform with the typical section shown on the plans and to the established lines and grades. Should the material, due to any reason or cause, lose the required stability, density, and finish before the next course is placed or the work is accepted, it shall be recompacted and refinished at the sole expense of the Contractor.

When nuclear gages are to be used for density determination, testing shall be done in accordance with Section 120.

155-6.5 FINISHING AND CURING. After the final layer or course of lime-treated subgrade has been compacted, it shall be brought to the required lines and grades in accordance with the typical sections. The completed section shall then be finished by rolling, as directed, with a pneumatic or other suitable roller sufficiently light to prevent hair cracking. The finished surface shall not vary more than 3/8 inch (9 mm) when tested with a 16-foot (4.8 meter) straightedge applied parallel with and at right angles to the pavement centerline. Any variations in excess of this tolerance shall be corrected by the Contractor, at his/her own expense, in a manner satisfactory to the Engineer.

The completed section shall be moist-cured for a minimum of 7 days before further courses are added or any traffic is permitted, unless otherwise directed by the Engineer. Subsequent courses shall be applied within 14 days after the lime-treated subgrade is cured.

155-6.6 THICKNESS. The thickness of the lime-treated subgrade shall be determined by depth tests or cores taken at intervals so that each test shall represent no more than 300 square yards (250 square meters). When the base deficiency is more than 1/2 inch (12 mm), the Contractor shall correct such areas in a manner satisfactory to the Engineer. The Contractor shall replace, at his/her expense, the base material where borings are taken for test purposes.

155-6.7 MAINTENANCE. The Contractor shall maintain, at his/her own expense, the entire lime-treated subgrade in good condition from the start of work until all the work has been completed, cured, and accepted by the Engineer.

METHOD OF MEASUREMENT

155-7.1 The yardage of lime-treated subgrade to be paid for shall be the number of square yards (square meters) completed and accepted.

155-7.2 The amount of lime to be paid for shall be the number of tons (kg) of Hydrated Lime, or the calculated equivalent thereof, used as authorized. "Calculated Equivalent" will be determined by the Engineer as follows:

a. Hydrated lime delivered to the project in dry form will be measured according to the actual tonnage either spread on the subgrade or batched on site into a slurry, whichever is applicable.

b. Lime delivered to the project in slurry form will be paid for on the basis of certified chemical composition tickets and batch weight tickets. The owner shall reserve the right to have the dry lime content verified by an independent testing laboratory. If the chemical composition is reported on the basis of Pebble Quicklime, the equivalent hydrated lime will be determined in accordance with paragraph c. below.

c. If Pebble Quicklime is delivered to the project in dry form it will be measured for payment on the basis of the following formula:

Total Quicklime (CaO)(Tons) x %Purity x 1.32 Factor + Total Quicklime (CaO)(Tons) x % Impurities x 1.00 Factor = Equivalent Hydrated Lime $Ca(OH)_2$(Tons).

The foregoing will apply whether the quicklime is spread dry (if allowed) or batched into a slurry.

BASIS OF PAYMENT

155-8.1 Payment shall be made at the contract unit price per square yard (square meter) for the lime-treated subgrade of the thickness specified. The price shall be full compensation for furnishing all material, except the lime, and for all preparation, delivering, placing and mixing these materials, and all labor, equipment, tools and incidentals necessary to complete this item.

155-8.2 Payment shall be made at the contract unit price per pound (kg) of lime. This price shall be full compensation for furnishing this material; for all delivery, placing and incorporation of this material; and for all labor, equipment, tools, and incidentals necessary to complete this item.

Payment will be made under:

Item P-155-8.1 Lime-treated subgrade—per square yard (square meter)

Item P-155-8.2 Lime—per pound (kg)

TESTING REQUIREMENTS

ASTM D 698 Moisture-Density Relations of Soils and Soil-Aggregate Mixtures Using 5.5 lb (2.49 kg) Rammer and 12-in. (305 mm) Drop

ASTM D 1556 Density of Soil in Place by the Sand-Cone Method

ASTM D 2922 Density of Soil in Place by the Nuclear Density Method

AASHTO T 26 Quality of Water to be Used in Concrete

MATERIAL REQUIREMENTS

ASTM C 977 Quicklime and Hydrated Lime for Soil Stabilization

END OF ITEM P-155

Intentionally Left Blank

ITEM P-156 TEMPORARY AIR AND WATER POLLUTION, SOIL EROSION, AND SILTATION CONTROL

DESCRIPTION

156-1.1 This item shall consist of temporary control measures as shown on the plans or as ordered by the Engineer during the life of a contract to control water pollution, soil erosion, and siltation through the use of berms, dikes, dams, sediment basins, fiber mats, gravel, mulches, grasses, slope drains, and other erosion control devices or methods.

The temporary erosion control measures contained herein shall be coordinated with the permanent erosion control measures specified as part of this contract to the extent practical to assure economical, effective, and continuous erosion control throughout the construction period.

Temporary control may include work outside the construction limits such as borrow pit operations, equipment and material storage sites, waste areas, and temporary plant sites.

MATERIALS

156-2.1 GRASS. Grass that will not compete with the grasses sown later for permanent cover shall be a quick-growing species (such as ryegrass, Italian ryegrass, or cereal grasses) suitable to the area providing a temporary cover.

156-2.2 MULCHES. Mulches may be hay, straw, fiber mats, netting, bark, wood chips, or other suitable material reasonably clean and free of noxious weeds and deleterious materials.

156-2.3 FERTILIZER. Fertilizer shall be a standard commercial grade and shall conform to all Federal and state regulations and to the standards of the Association of Official Agricultural Chemists.

156-2.4 SLOPE DRAINS. Slope drains may be constructed of pipe, fiber mats, rubble, portland cement concrete, bituminous concrete, or other materials that will adequately control erosion.

156-2.5 OTHER. All other materials shall meet commercial grade standards and shall be approved by the Engineer before being incorporated into the project.

CONSTRUCTION REQUIREMENTS

156-3.1 GENERAL. In the event of conflict between these requirements and pollution control laws, rules, or regulations of other Federal, state, or local agencies, the more restrictive laws, rules, or regulations shall apply.

The Engineer shall be responsible for assuring compliance to the extent that construction practices, construction operations, and construction work are involved.

* * * *

Open burning.

Erosion control measures.

* * * *

seasonal limitations make such coordination unrealistic, temporary erosion control measures shall be taken immediately to the extent feasible and justified.

In the event that temporary erosion and pollution control measures are required due to the Contractor's negligence, carelessness, or failure to install permanent controls as a part of the work as scheduled or are ordered by the Engineer, such work shall be performed by the Contractor at his/her own expense.

The Engineer may increase or decrease the area of erodible earth material to be exposed at one time as determined by analysis of project conditions.

The erosion control features installed by the Contractor shall be acceptably maintained by the Contractor during the construction period.

Whenever construction equipment must cross watercourses at frequent intervals, and such crossings will adversely affect the sediment levels, temporary structures should be provided.

Pollutants such as fuels, lubricants, bitumen, raw sewage, wash water from concrete mixing operations, and other harmful materials shall not be discharged into or near rivers, streams, and impoundments or into natural or manmade channels leading thereto.

METHOD OF MEASUREMENT

156-4.1 Temporary erosion and pollution control work required which is not attributed to the Contractor's negligence, carelessness, or failure to install permanent controls will be performed as scheduled or ordered by the Engineer. Completed and accepted work will be measured as follows:

a. Temporary seeding and mulching will be measured by the square yard (square meter).

b. Temporary slope drains will be measured by the linear foot (meter).

c. Temporary benches, dikes, dams, and sediment basins will be measured by the cubic yard (cubic meter) of excavation performed, including necessary cleaning of sediment basins, and the cubic yard (cubic meter) of embankment placed at the direction of the Engineer, in excess of plan lines and elevations.

d. All fertilizing will be measured by the ton (kilogram).

156-4.2 Control work performed for protection of construction areas outside the construction limits, such as borrow and waste areas, haul roads, equipment and material storage sites, and temporary plant sites, will not be measured and paid for directly but shall be considered as a subsidiary obligation of the Contractor with costs included in the contract prices bid for the items to which they apply.

BASIS OF PAYMENT

156-5.1 Accepted quantities of temporary water pollution, soil erosion, and siltation control work ordered by the Engineer and measured as provided in paragraph 156-4.1 will be paid for under:

Item P-156-5.1 Temporary seeding and mulching—per square yard (square meter)

Item P-156-5.2 Temporary slope drains—per linear foot (meter)

Item P-156-5.3 Temporary benches, dikes, dams and sediment basins—per cubic yard (cubic meter)

Item P-156-5.4 Fertilizing—per ton (kilogram)

Where other directed work falls within the specifications for a work item that has a contract price, the units of work shall be measured and paid for at the contract unit price bid for the various items.

Temporary control features not covered by contract items that are ordered by the Engineer will be paid for in accordance with Section 90-05.

END OF ITEM P-156

ITEM P-157 CEMENT KILN DUST (CKD) TREATED SUBGRADE

DESCRIPTION

157-1.1 This item shall consist of constructing one or more courses of a mixture of soil, cement kiln dust, and water in accordance with this specification, and in conformity with the lines, grades, thickness, and typical cross sections shown on the plans.

MATERIALS

157-2.1 CEMENT KILN DUST. Cement kiln dust shall contain a minimum of 40% CaO and be capable of providing the soil modification specified for this project. Cement Kiln Dust from the (_____) Cement Plant(s) is(are) a pre-approved source for cement kiln dust for this project. All other sources shall be identified and approved in advance of stabilization operations in order that laboratory tests can be completed prior to commencing work.

* * * *

Material/Properties	Target	Tolerance	Specifications
Cement Kiln Dust	(____)%	0 to +2%	% Total Dry Materials
Moisture Content	Optimum	0% to 6%	ASTM D-1557
Plastic Index	< (____)	None	ASTM D-4318

* * * *

157-6.3 MIXING. The mixing procedure shall be the same for "Dry Placing" as hereinafter described:

The full depth of the treated subgrade shall be mixed with a rotary pulvamixer, disc and field cultivator or, other suitable methods as approved by the Engineer. Cement kiln dust shall not be left exposed for more than 1 hour after distribution.

Required moisture contents shall be established by the Engineer based on laboratory tests with the site soils at the specified cement kiln dust percent to be used for soil modification. Final moisture content of the mix, immediately prior to compaction shall be determined in accordance with ASTM C-593 (Modified Proctor) and shall not be less than the optimum moisture content or more than 6 percent over optimum.

If the soil cement kiln dust mixture contains clods greater than 1-1/2 inch in size, they shall be reduced in size by additional pulverization.

As a minimum, one soil sample will be obtained and tested for each 25 tons of CKD incorporated. Testing shall include Plastic Index Determination (ASTM D-4318) and 7-day accelerated compressive strengths (Section 8 ASTM C-593).

Areas that fall below specified values will need to be reworked, as directed by the Engineer.

157-6.4 COMPACTION. Compaction of the soil/cement kiln dust mixture shall be delayed for a minimum of 24 hours after mixing the cement kiln dust into the subgrade. The field density of the compacted mixture shall be at least 90 percent of the maximum density as determined by ASTM D-1557. The in-place field density shall be determined in accordance with ASTM D-1556 or ASTM D 2167. Testing frequency shall be a minimum of 1 compaction test per 5000 square feet of stabilized base or as directed by the Engineer.

All irregularities, depressions, or weak spots that develop shall be corrected immediately by scarifying the areas affected, adding or removing material as required, and reshaping and recompacting. The surface of the course shall be maintained in a smooth condition, free from undulations and ruts, until other work is placed thereon or the work is accepted.

In addition to the requirements specified for density, the full depth of the material shown on the plans shall be compacted to the extent necessary to remain firm and stable under construction equipment. After each section is completed, tests will be made by the Engineer. If the material fails to meet the density requirements, it shall be reworked to meet these requirements. Throughout this entire operation, the shape of the course shall be maintained by blading, and the surface upon completion shall be smooth and shall conform with the typical section shown on the plans to the established lines and grades specified. Should the material, due to any reason or cause, lose the required stability, density, and finish before the next course is placed or the work is accepted, it shall be recompacted and refinished at the sole expense of the Contractor.

157-6.5 FINISHING AND CURING. After the final layer or course of cement kiln dust treated subgrade has been compacted, it shall be brought to the required lines and grades in accordance with the typical sections. The finished surface shall not vary more than 3/8 inch when tested with a 16-foot straightedge applied parallel with and at right angles to the pavement centerline. Any variations in excess of this tolerance shall be corrected by the Contractor, at his/her own expense, in a manner satisfactory to the Engineer.

After the cement kiln dust treated course has been finished as specified herein, the surface shall be protected against rapid drying by either of the following methods for a period of not less than three days or until the pavement section is placed.

a. Maintain in a thorough and continuously moist condition by sprinkling.

b. Apply a 2-inch layer of earth on the compacted course and maintain in a moist condition.

157-6.6 THICKNESS. The thickness of the cement kiln dust treated subgrade shall be determined by depth tests or cores taken at intervals so that each test shall represent no more than 300 square yards. When the base deficiency is

more than 1/2 inch, the Contractor shall correct such areas in a manner satisfactory to the Engineer. The Contractor shall replace, at his/her expense, the base material where borings are taken for test purposes.

157-6.7 MAINTENANCE. The Contractor shall maintain, at his/her own expense, the entire cement kiln dust treated subgrade in good condition from the start of work until all the work has been completed, cured, and accepted by the Engineer.

157-6.8 HANDLING AND SAFETY. The Contractor shall obtain from the Supplier of the cement kiln dust the instructions for, proper safety and handling of the cement kiln dust.

METHOD OF MEASUREMENT

157-7.1 The amount of cement kiln dust treated subgrade to be paid for shall be based on the number of square yards completed and accepted.

The amount of cement kiln dust utilized is based upon an application rate of (___) percent (by dry weight of soil).

* * * *

ITEM P-158 FLY ASH TREATED SUBGRADE

* * * *

* * * *

depth and which has cutters that will plane the secondary grade to a smooth surface over the entire width of the cut. The machine must give visible indication at all times that it is cutting to the proper depth.

158-6.2 APPLICATION. Fly ash shall be spread only on that area where the first mixing operations can be completed within 2 hours. The application and mixing of fly ash with the soil shall be accomplished by the methods hereinafter described as ``Dry Placing."

a. Dry Placing. The fly ash shall be spread uniformly over the top of the subgrade by an approved screw-type spreader box or other approved spreading equipment. The amount of fly ash spread shall be the amount required for mixing to the specified depth which will result in the percentage determined in the job mix formula.

The fly ash shall be distributed in such manner that scattering by wind will be minimal. Fly ash shall not be applied when wind conditions, in the opinion of the Engineer, are detrimental to a proper application. A motor grader shall not be used to spread the fly ash.

158-6.3 MIXING. The mixing procedure shall be the same for Dry Placing as hereinafter described. The full depth of the treated subgrade shall be mixed with a rotary pulvamixer that utilizes a direct hydraulic drive. Fly ash shall not be left exposed for more than 30 minutes after distribution. The mixing machine shall make two coverages. Water shall be added through use of a pulvamixer equipped with a spray bar in the mixing drum capable of applying sufficient quantities of water to achieve the required moisture content of the soil-fly ash mixture. The system shall be capable of being regulated to the degree as to maintain moisture contents within the recommended range.

Required moisture contents shall be established by the Engineer based on laboratory tests with the site soils and specific fly ash to be used for the treatment. Final moisture content of the mix, immediately prior to compaction shall be determined in accordance with ASTM D 698 and shall not be below nor more than 2 percent above the optimum moisture content for maximum density of the mix. If moisture contents exceed the specified limits, additional fly ash may be added to lower the moisture content to the required limits. Lowering moisture contents by aeration following addition of the fly ash will not be permitted.

If the soil fly ash mixture contains clods greater than 1-1/2 inch in size, they shall be reduced in size by additional pulverization.

158-6.4 COMPACTION. Compaction of the soil-fly ash mixture shall begin immediately after mixing of the fly ash and be completed within two hours following incorporation of the fly ash. The field density of the compacted mixture shall be at least 95 percent of the maximum density of laboratory specimens prepared from samples taken from the material in place. The specimens shall be compacted and tested in accordance with ASTM D 698. The in-place density shall be determined in accordance with ASTM D 1556, ASTM D 2167 or ASTM D 2922.

All irregularities, depressions, or weak spots, which develop, shall be corrected immediately by scarifying the areas affected, adding or removing material as required, and reshaping and re-compacting. The surface of the course shall be maintained in a smooth condition, free from undulations and ruts, until other work is placed thereon or the work is accepted.

In addition to the requirements specified for density, the full depth of the material shown on the plans shall be compacted to the extent necessary to remain firm and stable under construction equipment. After each section is completed, tests will be made by the Engineer. If the material fails to meet the density requirements, it shall be reworked to meet these requirements. Throughout this entire operation, the shape of the course shall be maintained by blading, and the surface upon completion shall be smooth and shall conform with the typical section shown on the plans and to the established lines and grades. Should the material, due to any reason or cause, lose the required stability, density, and finish before the next course is placed or the work is accepted, it shall be recompacted and refinished at the sole expense of the Contractor.

* * * *

Item P-158-8.2	Fly ash—per pound (kg)

TESTING REQUIREMENTS

ASTM D 698	Moisture-Density Relations of Soils and Soil-Aggregate Mixtures Using 5.5 lb (2.49 kg) Rammer and 12-in. (305 mm) Drop
ASTM D 1556	Density of Soil in Place by the Sand-Cone Method
ASTM D 2167	Density and Unit Weight of Soil in Place by the Rubber-Ballon Method
AASHTO T 26	Quality of Water to be Used in Concrete

MATERIAL REQUIREMENTS

ASTM C 618	Coal Fly Ash and Raw or Calcined Natural Pozzolan for Use as a Mineral Admixture in Concrete

END OF ITEM P-158

Intentionally Left Blank

PART III – FLEXIBLE BASE COURSES

ITEM P-208 AGGREGATE BASE COURSE

208-1.1 This item shall consist of a base course composed of **[crushed] [uncrushed]** coarse aggregate bonded with either soil or fine aggregate or both. It shall be constructed on a prepared underlying course in accordance with these specifications and shall conform to the dimensions and typical cross section shown on the plans.

MATERIALS

208-2.1 UNCRUSHED COARSE AGGREGATE. The base course material shall consist of hard, durable particles or fragments of stone or gravel mixed or blended with sand, stone dust, or other similar binding or filler materials produced from approved sources. All oversized stones, rocks and boulders occurring in the pit or quarry material shall be wasted; those of acceptable quality may be crushed and become a part of the base material, provided the blend meets the specified gradations. The aggregate shall be free from vegetation, lumps, or excessive amounts of clay and other objectionable substances. The coarse aggregate shall have a percent of wear not more than 45 at 500 revolutions as determined by ASTM C 131.

208-2.2 CRUSHED COARSE AGGREGATE. The aggregates shall consist of both fine and coarse fragments of crushed stone, crushed slag, or crushed gravel mixed or blended with sand, screenings, or other similar approved materials. The crushed stone shall consist of hard, durable particles or fragments of stone and shall be free from excess flat, elongated, soft or disintegrated pieces, dirt, or other objectionable matter.

The crushed slag shall be air-cooled, blast furnace slag and shall consist of angular fragments reasonably uniform in density and quality and shall be reasonably free from thin, elongated, or soft pieces, dirt, and other objectionable matter. It shall weigh not less than 70 pounds per cubic foot (1.12 Mg/cubic meter) as determined by ASTM C 29.

The crushed gravel shall consist of hard, durable stones, rock, and boulders crushed to specified size and shall be free from excess flat, elongated, soft or disintegrated pieces, dirt, or other objectionable matter. The method used in production of crushed gravel shall be such that the fractured particles occurring in the finished product shall be as nearly constant and uniform as practicable and shall result in a minimum of 60% of the material retained on the No. 4 sieve having at least 2 fractured faces and 75% having at least 1 fractured face.

If necessary to meet this requirement or to eliminate an excess of fine, uncrushed particles, the gravel shall be screened before crushing. All stones, rocks, and boulders of inferior quality in the pit shall be wasted.

The crushed coarse aggregate shall have a percent of wear not more than 50 at 500 revolutions as determined by ASTM C 131.

All material passing the No. 4 mesh (4.75 mm) sieve produced in the crushing operation of either stone, slag, or gravel shall be incorporated in the base material to the extent permitted by the gradation requirements.

208-2.3 GRADATION. The gradation of the uncrushed or crushed material shall meet the requirements of one of the gradations given in Table 1 when tested in accordance with ASTM C 117, ASTM C 136, and ASTM D 422.

* * * *

TABLE 1. REQUIREMENTS FOR GRADATION OF AGGREGATE

Sieve Designation	Percentage by weight passing sieves		
	2'' maximum	1 1/2'' maximum	1''maximum
2 inch (50.0 mm)	100	--	--
1-1/2 inch (37.0 mm)	70-100	100	--
1 inch (25.0 mm)	55-85	70-100	100
3/4 inch (13.0 mm)	50-80	55-85	70-100
No. 4 (4.75 mm)	30-60	30-60	35-65
No. 40 (0.45 mm)	10-30	10-30	10-25
No. 200 (0.075 mm)	5-15	5-15	5-15

* * * *

drainage conditions, hauling, or any other cause, shall be corrected and rolled to the required density before the base course is placed thereon.

To protect the underlying course and to ensure proper drainage, the spreading of the base shall begin along the centerline of the pavement on a crowned section or on the high side of the pavement with a one-way slope.

208-3.3 METHODS OF PRODUCTION

a. Plant Mix. When provided in the proposal, or when selected by the Contractor and approved by the Engineer, the base material shall be uniformly blended or mixed in an approved plant. The mixing plant shall include bins for storage and batching of the aggregate, pump and tanks for water, and batch mixers of either the pugmill or drum type. All mineral aggregates shall be batched into the mixer by weight. The agitation shall be such that a thorough dispersion of moisture is obtained. The size of the batch and the time of mixing shall be fixed by the Engineer and shall produce the results and requirements specified. The base course material produced by combining two or more materials from different sources shall be mixed in a mixing plant described herein. The mixture material shall be at a satisfactory moisture content to obtain maximum density.

b. Travel Plant. When the use of a traveling plant is allowed, the plant shall blend and mix the materials to meet these specifications. It shall accomplish a thorough mixing in one trip. The agitation shall be such that the dispersion of the moisture is complete. The machine shall move at a uniform rate of speed and this speed shall be regulated to fix the mixing time. If a windrow-type of travel plant is employed for mixing, the aggregate shall be placed in windrows parallel to the pavement centerline.

The windrow volume shall be sufficient to cover exact areas as planned. The windrow contents shall produce a mixture of the required gradation and bonding qualities. If a travel plant is used which is of the type that mixes previously spread aggregates in-place, the material shall have been spread in such thickness and proportions as may be handled by the machine to develop a base course of the thickness of each layer and of the gradation required. With either type of equipment, the mixed material shall be at a satisfactory moisture content to obtain the maximum density.

c. Materials of Proper Gradation. When the entire base course material from coarse to fine is secured in a uniform and well-graded condition and contains approximately the proper moisture, such approved material may be handled directly to the spreading equipment. The material may be obtained from gravel pits, stockpiles, or produced from a crushing and screening plant with the proper blending. The materials from these sources shall meet the requirements for gradation, quality, and consistency. The intent of this section of these specifications is to secure materials that will not require further mixing. The base material shall be at a satisfactory moisture content to obtain maximum density. Any minor deficiency or excess of moisture may be corrected by surface sprinkling or by aeration. In such instances some mixing or manipulation may be required immediately preceding the rolling to obtain the required moisture content. The final operation shall be blading, if necessary, to obtain a smooth uniform surface true to line and grade.

208-3.4 PLACING.

a. The aggregate base material that is correctly proportioned, or has been processed in a plant, shall be placed on the prepared underlying course and compacted in layers of the thickness shown on the plans. The depositing and spreading of the material shall commence where designated and shall progress continuously without breaks. The material shall be deposited and spread in lanes in a uniform layer and without segregation of size to such loose depth that, when compacted, the layer shall have the required thickness. The base aggregate shall be spread by spreader boxes or other approved devices having positive thickness controls that shall spread the aggregate in the required amount to avoid or minimize the need for hand manipulation. Dumping from vehicles in piles that require rehandling shall not be permitted. Hauling over the uncompacted base course shall not be permitted.

b. The aggregate base material that has been processed in a traveling plant, or mixed and blended in-place, shall be spread in a uniform layer of required depth and width and to the typical cross section. The spreading shall be by a self-powered blade grader, mechanical spreader, or other approved method. In spreading, care shall be taken

to prevent cutting into the underlying layer. The material shall be bladed until a smooth, uniform surface is obtained, true to line and grade.

c. The base course shall be constructed in a layer not less than 3 inches (75 mm) nor more than 6 inches (150 mm) of compacted thickness. The aggregate as spread shall be of uniform grading with no pockets of fine or coarse materials. The aggregate, unless otherwise permitted by the Engineer, shall not be spread more than 2,000 square yards (1700 square meters) in advance of the rolling. Any necessary sprinkling shall be kept within these limits. No material shall be placed in snow or on a soft, muddy, or frozen course.

When more than one layer is required, the construction procedure described herein shall apply similarly to each layer.

During the mixing and spreading process, sufficient caution shall be exercised to prevent the incorporation of subgrade, subbase, or shoulder material in the base course mixture.

208-3.5 COMPACTION. Immediately upon completion of the spreading operations, the aggregate shall be thoroughly compacted. The number, type, and weight of rollers shall be sufficient to compact the material to the required density.

The moisture content of the material during placing operations shall not be below, nor more than 2 percentage points above, the optimum moisture content as determined by ASTM **[ ]**.

* * * *

using blocks of materials with densities that extend through a range representative of the density of the proposed base material. ASTM 3017 may be used to determine the moisture content of the material. (See Section 120 of the General Provisions for additional guidance)

* * * *

BASIS OF PAYMENT

208-5.1 Payment shall be made at the contract unit price per cubic yard (cubic meter) for aggregate base course. This price shall be full compensation for furnishing all materials and for all operations, hauling, and placing of these materials, and for all labor, equipment, tools, and incidentals necessary to complete the item.

Payment will be made under:

Item P-208-5.1 **[Uncrushed][Crushed]** Aggregate Base Course—per cubic yard (cubic meter)

TESTING REQUIREMENTS

ASTM C 29	Unit Weight of Aggregate
ASTM C 117	Materials Finer than 75µm (No. 200) Sieve in Mineral Aggregates by Washing
ASTM C 131	Resistance to Abrasion of Small Size Coarse Aggregate by Use of the Los Angeles Machine
ASTM C 136	Sieve Analysis of Fine and Coarse Aggregates
ASTM D 422	Particle Size Analysis of Soils
ASTM D 698	Moisture-Density Relations of Soils and Soil-Aggregate Mixtures Using 5.5 lb (2.49 kg) Rammer and 12-in (305 mm) Drop
ASTM D 1556	Density of Soil in Place by the Sand-Cone Method
ASTM D 1557	Test for Laboratory Compaction Characteristics of Soil Using Modified Effort
ASTM D 2167	Density of Soil in Place by the Rubber-Ballon Method
ASTM D 3665	Random Sampling of Paving Materials
ASTM D 4318	Liquid Limit, Plastic Limit, and Plasticity Index of Soils

END OF ITEM P-208

ITEM P-209 CRUSHED AGGREGATE BASE COURSE

DESCRIPTION

209-1.1 This item consists of a base course composed of crushed aggregates constructed on a prepared course in accordance with these specifications and in conformity to the dimensions and typical cross sections shown on the plans.

MATERIALS

209-2.1 AGGREGATE. Aggregates shall consist of clean, sound, durable particles of crushed stone, crushed gravel, or crushed slag and shall be free from coatings of clay, silt, vegetable matter, and other objectionable materials and shall contain no clay balls. Fine aggregate passing the No. 4 (4.75 mm) sieve shall consist of fines from the operation of crushing the coarse aggregate. If necessary, fine aggregate may be added to produce the correct gradation. The fine aggregate shall be produced by crushing stone, gravel, or slag that meet the requirements for wear and soundness specified for coarse aggregate.

The crushed slag shall be an air-cooled, blast furnace slag and shall have a unit weight of not less than 70 pounds per cubic foot (1.12 Mg/cubic meter) when tested in accordance with ASTM C 29.

The coarse aggregate portion, defined as the material retained on the No. 4 (4.75 mm) sieve and larger, shall contain not more than 15 percent, by weight, of flat or elongated pieces as defined in ASTM D 693 and shall have at least 90 percent by weight of particles with at least two fractured faces and 100 percent with at least one fractured face. The area of each face shall be equal to at least 75 percent of the smallest midsectional area of the piece. When two fractured faces are contiguous, the angle between the planes of fractures shall be at least 30 to count as two fractured faces.

The percentage of wear shall not be greater than 45 percent when tested in accordance with ASTM C 131. The sodium sulfate soundness loss shall not exceed 12 percent, after 5 cycles, when tested in accordance with ASTM C 88.

The fraction passing the No. 40 (0.42 mm) sieve shall have a liquid limit no greater than 25 and a plasticity index of not more than 4 when tested in accordance with ASTM D 4318. The fine aggregate shall have a minimum sand equivalent value of 35 when tested in accordance with ASTM D 2419.

a. Sampling and Testing. Aggregates for preliminary testing shall be furnished by the Contractor prior to the start of production. All tests for initial aggregate submittals necessary to determine compliance with the specification requirements will be made by the Engineer at no expense to the Contractor.

Samples of aggregates shall be furnished by the Contractor at the start of production and at intervals during production. The sampling points and intervals will be designated by the Engineer. The samples will be the basis of approval of specific lots of aggregates from the standpoint of the quality requirements of this section.

In lieu of testing, the Engineer may accept certified state test results indicating that the aggregate meets specification requirements. Certified test results shall be less than 6 months old.

Samples of aggregates to check gradation shall be taken by the Engineer at least two per lot. The lot will be consistent with acceptable sampling for density. The samples shall be taken from the in-place, compacted material. Sampling shall be in accordance with ASTM D 75, and testing shall be in accordance with ASTM C 136 and ASTM C 117.

b. Gradation Requirements. The gradation (job mix) of the final mixture shall fall within the design range indicated in Table 1, when tested in accordance with ASTM C 117 and ASTM C 136. The final gradation shall be continuously well graded from coarse to fine and shall not vary from the low limit on one sieve to the high limit on an adjacent sieve or vice versa.

TABLE 1. REQUIREMENTS FOR GRADATION OF AGGREGATE \1

Sieve Size	Design Range Percentage by Weight Percentage by Weight	Job Mix Tolerances Percent
2 in (50.0 mm)	100	0
1-1/2 (37.0 mm)	95-100	+/- 5
1 in (25.0 mm)	70-95	+/- 8
3/4 in (19.0 mm)	55-85	+/- 8
No. 4 (4.75 mm)	30-60	+/- 8
No. 30 (0.60 mm)	12-30	+/- 5
No. 200 (0.075 mm)	0-5	+/- 3

\1\ Where environmental conditions (temperature and availability of free moisture) indicate potential damage due to frost action, the maximum percent of material, by weight, of particles smaller than 0.02 mm shall be 3 percent. It also may be necessary to have a lower percentage of material passing the No. 200 sieve to help control the percentage of particles smaller than 0.02 mm.

The job mix tolerances in Table 1 shall be applied to the job mix gradation to establish a job control grading band. The full tolerance still will apply if application of the tolerances results in a job control grading band outside the design range.

The fraction of the final mixture that passes the No. 200 (0.075 mm) sieve shall not exceed 60 percent of the fraction passing the No. 30 (0.60 mm) sieve.

CONSTRUCTION METHODS

209-3.1 PREPARING UNDERLYING COURSE. The underlying course shall be checked and accepted by the Engineer before placing and spreading operations are started. Any ruts or soft yielding places caused by improper drainage conditions, hauling, or any other cause shall be corrected at the Contractor's expense before the base course is placed thereon. Material shall not be placed on frozen subgrade.

209-3.2 MIXING. The aggregate shall be uniformly blended during crushing operations or mixed in a plant. The plant shall blend and mix the materials to meet the specifications and to secure the proper moisture content for compaction.

209-3.3 PLACING. The crushed aggregate base material shall be placed on the moistened subgrade in layers of uniform thickness with a mechanical spreader.

The maximum depth of a compacted layer shall be 6 inches (150 mm). If the total depth of the compacted material is more than 6 inches (150 mm), it shall be constructed in two or more layers. In multi-layer construction, the base course shall be placed in approximately equal-depth layers.

The previously constructed layer should be cleaned of loose and foreign material prior to placing the next layer. The surface of the compacted material shall be kept moist until covered with the next layer.

209-3.4 COMPACTION. Immediately upon completion of the spreading operations, the crushed aggregate shall be thoroughly compacted. The number, type, and weight of rollers shall be sufficient to compact the material to the required density.

The moisture content of the material during placing operations shall not be below, nor more than 2 percentage points above, the optimum moisture content as determined by ASTM **[ ]**.

209-3.5 ACCEPTANCE SAMPLING AND TESTING FOR DENSITY. Aggregate base course shall be accepted for density on a lot basis. A lot will consist of one day's production where it is not expected to exceed

2400 square yards (2000 square meters). A lot will consist of one-half day's production where a day's production is expected to consist of between 2400 and 4800 square yards (2000 and 4000 square meters).

Each lot shall be divided into two equal sublots. One test shall be made for each sublot. Sampling locations will be determined by the Engineer on a random basis in accordance with statistical procedures contained in ASTM D 3665.

Each lot will be accepted for density when the field density is at least 100 percent of the maximum density of laboratory specimens prepared from samples of the base course material delivered to the job site. The specimens shall be compacted and tested in accordance with ASTM **[ ]**. The in-place field density shall be determined in accordance with ASTM D 1556 or D 2167. If the specified density is not attained, the entire lot shall be reworked and/or recompacted and two additional random tests made. This procedure shall be followed until the specified density is reached.

* * * *

The Contractor shall remove all survey and grade hubs from the base courses prior to placing any bituminous surface course.

METHOD OF MEASUREMENT

209-4.1 The quantity of crushed aggregate base course to be paid for will be determined by measurement of the number of **[square yards (square meters)][cubic yards (cubic meters)]** of material actually constructed and accepted by the Engineer as complying with the plans and specifications. **[On individual depth measurements, thicknesses more than 1/2 inch (12 mm) in excess of the design thickness shall be considered as the specified thickness, plus 1/2 inch (12 mm) in computing the number of cubic yards (cubic meters) for payment.]**

BASIS OF PAYMENT

209-5.1 Payment shall be made at the contract unit price per **[square yard (square meter)][cubic yard (cubic meter)]** for crushed aggregate base course. This price shall be full compensation for furnishing all materials, for preparing and placing these materials, and for all labor, equipment tools, and incidentals necessary to complete the item.

Payment will be made under:

Item P-209-5.1 Crushed Aggregate Base Course—per **[square yard (square meter][cubic yard (cubic meter)]**

TESTING REQUIREMENTS

ASTM C 29	Unit Weight of Aggregate
ASTM C 88	Soundness of Aggregates by Use of Sodium Sulfate or Magnesium Sulfate
ASTM C 117	Materials Finer than 75µm (No. 200) Sieve in Mineral Aggregates by Washing
ASTM C 131	Resistance to Degradation of Small-Size Coarse Aggregate by abrasion and impact in the Los Angeles Machine
ASTM C 136	Sieve Analysis of Fine and Coarse Aggregates
ASTM D 75	Sampling Aggregate
ASTM D 693	Crushed Aggregate for Macadam Pavements
ASTM D 698	Moisture-Density Relations of Soils and Soil-Aggregate Mixtures Using 5.5-lb (2.49-kg) Rammer and 12-in (305mm) Drop
ASTM D 1556	Density of Soil in Place by the Sand-Cone Method
ASTM D 1557	Test for Laboratory Compaction Characteristics of Soil Using Modified Effort
ASTM D 2167	Density and Unit Weight of Soil in Place by the Rubber Ballon Method
ASTM D 2419	Sand Equivalent Value of Soils and Fine Aggregate
ASTM D 2922	Density of Soil and Soil-Aggregate in Place by Nuclear Methods

ASTM D 3017 Water Content of Soil and Rock in Place by Nuclear Methods

ASTM D 3665 Random Sampling of Construction Materials

ASTM D 4318 Liquid Limit, Plastic Limit, and Plasticity Index of Soils

END OF P-209

Intentionally Left Blank

ITEM P-210 CALICHE BASE COURSE

DESCRIPTION

210-1.1 This item shall consist of a base course composed of caliche, caliche-gravel, caliche and limestone, or material of similar characteristics, constructed on the prepared underlying course in accordance with these specifications and in conformity to the dimensions and typical cross section shown on the plans.

MATERIALS

210-2.1 MATERIALS. The base course material shall consist of caliche, caliche-gravel, caliche limestone, or similar materials obtained from sources approved by the Engineer prior to use of the materials. All acceptable material shall be screened, and the oversize shall be crushed and returned to the screened material in such manner and proportions that will produce a uniform product.

The gradation of the material, as finally processed and blended, shall meet the following requirements when tested in accordance with ASTM C 136.

Sieve Designation (Square Openings)	Percentage by Weight Passing Sieves
2 inch (50.0 mm)	100
No. 40 (0.425 mm)	15-35
No. 200 (0.075 mm)	0-15

That portion of the material, including the blended filler, passing a No. 40 (0.425 mm) mesh sieve shall be known as soil binder and shall have a liquid limit of not more than 35 and a plasticity index of not more than 10 as determined as ASTM D 4318.

If necessary, the Contractor shall blend or combine materials so that the final processed material meets all of the requirements of these specifications. The Contractor shall make such modifications in materials and methods as are necessary to secure a material that is capable of being compacted into a dense and well-bonded base.

210-2.2 FILLER FOR BLENDING. If filler, in addition to that naturally present in the base course material, is necessary for satisfactory bonding of the material, for changing the soil constants of the material passing the No. 40 mesh sieve, or for correcting the gradation to the limitations of the specified gradation, it shall be uniformly blended with the base course material on the runway, at the crushing plant, or at the mixing plant. The material for such purpose shall be obtained from sources approved by the Engineer.

CONSTRUCTION METHODS

210-3.1 OPERATION IN PITS. All work involved in clearing and stripping pits, including the handling of unsuitable material, shall be performed by the Contractor at his/her own expense. The pits shall be operated in such a manner that a clean and uniform material will be secured. The base course material shall be obtained from approved sources.

210-3.2 EQUIPMENT. All equipment necessary for the proper construction of the work shall be on the project, in first-class working condition, and approved by the Engineer before construction is permitted to start.

210-3.3 PREPARING UNDERLYING COURSE. The underlying course shall be checked and accepted by the Engineer before placing and spreading operations are started. Any ruts or soft, yielding places caused by improper drainage conditions, hauling, or any other cause, shall be corrected at the Contractor's expense.

210-3.4 PLACING AND SPREADING

a. The aggregate base material that has proportioned or processed shall be placed on the prepared underlying course and compacted in layers to the thickness shown on the plans. The depositing and spreading of the material shall commence where designated and shall progress without breaks. The material shall be deposited and spread in lanes in a uniform layer and without segregation of size to such loose depth that, when compacted, the layer shall have the required thickness. The base aggregate shall be spread by spreader boxes or other approved devices that shall spread the aggregate in the required amount. The base material shall be spread and shaped the same day as placed.

b. If the travel plant method is used for mixing, the base material shall be placed on the underlying course in windrows parallel to the centerline of the runway. Sufficient quantity and proportions of materials shall be placed in the windrow to provide a base mixture conforming to the specified grading and compacted thickness. The windrow shall be shaped to a uniform section and left undisturbed until measuring and sampling are complete. After mixing and before spreading, the mixture shall be examined by the Engineer, who shall determine whether the mixing is complete and satisfactory and whether the proper moisture content is maintained for spreading. No spreading shall be done, except when authorized.

After the mixing has been completed, the base material shall be spread to the required depth and width by a self-powered blade grader, mechanical spreader, or other approved method. In spreading, care shall be taken to prevent cutting into the underlying layer. The material shall be bladed, disced, and dragged if necessary until a smooth, uniform surface is obtained true to line, grade, and cross section.

c. When the base materials are to be proportioned and mixed or blended in-place, the different layers shall be spread and placed as follows with the relative proportions of the components of the mixture designated by the Engineer.

The base aggregate shall be deposited and spread evenly to a uniform thickness and width. Then the binder or filler or other admixture shall be deposited and spread evenly over the first layer. As many layers of materials as the Engineer may direct shall be added to obtain the required base materials.

When the required materials have been placed, they shall be thoroughly mixed and blended by means of approved graders, discs, harrows, or rotary-tillers, supplemented by other suitable equipment, if necessary. The mixing shall continue until the mixture is uniform throughout. Areas of segregated material shall be corrected by the addition of binder or filler material and shall be uniformly applied, prior to and during the mixing operations if necessary, to maintain the material at the proper moisture content. When the mixing and blending have been completed, the material shall be spread in a uniform layer which, when compacted, will meet the requirements of thickness and typical cross section. Hauling over material that has not been mixed and shaped shall not be permitted, except when necessitated by the placing of successive layers of materials. Layers of base material allowed to become partially compacted shall be scarified and disced before placing binder material or before blading and shaping for rolling.

d. The base course shall be constructed in a layer not less than 3 inches (75 mm) nor more than 6 inches (150 mm) of compacted thickness. The aggregate, as spread, shall be of uniform grading with no pockets of fine or coarse materials. Unless otherwise permitted by the Engineer, the aggregate shall not be spread more than 2,000 square yards (1700 square meters) in advance of the rolling. Any necessary sprinkling shall be kept within these limits. No material shall be placed in snow or on a soft, muddy, or frozen course.

When more than one layer is required, the construction procedure described herein shall apply similarly to each layer.

During the placing and spreading, sufficient caution shall be exercised to prevent the incorporation of subgrade, subbase, or shoulder material in the base course mixture.

210-3.5 COMPACTION. Immediately after completion of the spreading operations, the mixture shall be thoroughly compacted. The number, type, and weight of rollers shall be sufficient to compact the mixture to the required density.

The field density of the compacted material shall be at least 100 percent of the maximum density of laboratory specimens prepared from samples of the material delivered to the jobsite. The laboratory specimens shall be compacted and tested in accordance with **[ ]**. The in-place field density shall be determined in accordance with ASTM D 1556 or ASTM D 2167. The moisture content of the material at the start of compaction shall not be below nor more than 1-1/2 percentage points above the optimum moisture content.

* * * *

Hauling equipment may be routed over completed portions of the base course, provided no damage results and provided that such equipment is routed over the full width of the base course to avoid rutting or uneven compaction. However, the Engineer in charge shall have full and specific authority to stop all hauling over completed or partially completed base course when, in his/her opinion, such hauling is causing damage. Any damage resulting to the base course from routing equipment over the base course shall be repaired by the Contractor at his/her own expense.

210-3.10 MAINTENANCE. Following the completion of the base course, the Contractor shall perform all maintenance work necessary to keep the base course in a condition satisfactory for priming. After priming, the surface shall be kept clean and free from foreign material. The base course shall be properly drained at all times. If cleaning is necessary, or if the prime coat becomes disturbed, any work or restitution necessary shall be performed at the expense of the Contractor.

METHOD OF MEASUREMENT

210-4.1 The quantity of caliche base course to be paid for shall be the number of cubic yards (cubic meters) of base course material placed, bonded, and accepted in the completed base course. The quantity of base course material shall be measured in final position, based upon depth tests or cores taken as directed by the Engineer, at the rate of 1 depth test for each 300 square yards (250 square meters) of base course, or by means of average end areas on the complete work computed from elevations to the nearest 0.01 foot (3 mm). On individual depth measurements, thickness more than 1/2 inch (12 mm) in excess of that shown on the plans shall be considered as specified thickness, plus 1/2 inch (12 mm) in computing the yardage for payment. Base material shall not be included in any other excavation quantities.

BASIS OF PAYMENT

210-5.1 Payment shall be made at the contract unit price per cubic yard (cubic meter) for caliche base course. This price shall be full compensation for furnishing all materials and for all preparation, hauling, and placing of these materials, and for all labor, equipment, tools, and incidentals necessary to complete the item.

Payment will be made under:

Item P-210-5.1 Caliche Base Course—per cubic yard (cubic meter)

TESTING REQUIREMENTS

ASTM C 136 Sieve Analysis of Fine and Coarse Aggregates

ASTM D 698 Moisture-Density Relations of Soils and Soil-Aggregate Mixtures Using 5.5 lb (2.49 kg) Rammer and 12-in. (305 mm) Drop

ASTM D 1557 Test for Laboratory Compaction Characteristics of Soil Using Modified Effort

ASTM D 4318 Liquid Limit, Plastic Limit, and Plasticity Index of Soils

END OF ITEM P-210

ITEM P-211 LIME ROCK BASE COURSE

DESCRIPTION

211-1.1 This item shall consist of a base course composed of lime rock constructed on the prepared underlying course in accordance with these specifications and shall conform to the dimensions and typical cross section shown on the plans.

MATERIALS

211-2.1 MATERIALS. The lime rock base course material shall consist of fossiliferous limestone of uniform quality, and shall not contain hard or flinty pieces that will cause a rough surface containing pits and pockets. The rock shall show no tendency to ``air slake" or undergo chemical change when exposed to the weather. The material when watered and rolled shall be capable of being compacted into a dense and well-bonded base.

The oolitic type of lime rock shall meet the following requirements:

Carbonates of calcium and magnesium - not less than 70%.
Oxides of iron and aluminum - not more than 2%.
The combined amount of carbonates, oxides, and silica shall be at least 97%. The material shall be non-plastic.

All other types of lime rock shall contain not less than 95% of carbonates of calcium and magnesium. Liquid limit shall not exceed 35, plasticity index shall not exceed 6, as determined in accordance with ASTM D 4318.

The chemical analysis of lime rock shall consist of determining the insoluble silica, iron oxide, and alumina by solution of the sample in hydrochloric (HCl) acid, evaporating, dehydrating, redissolving the residue, and neutralizing with ammonium hydroxide, filtering, washing, and igniting the residue lime rock. The difference between the percentage of insoluble matter and 100% is reported as carbonates of calcium and magnesium.

The lime rock shall not contain more than 0.5% of roots, leaf mold, organic, or foreign matter and shall be obtained from pits from which all overburden has been removed previous to blasting and quarrying.

The gradation of the lime rock shall meet the following requirements:

Sieve Designation (square openings)	Percentage by Weight Passing Sieves
3-1/2 inch (90.mm)	100
3/4 inch (19.0 mm)	50-100

All fine material shall consist entirely of dust of fracture.

CONSTRUCTION METHODS

211-3.1 SOURCES OF SUPPLY. All work involved in cleaning and stripping pits, including the handling of unsuitable material shall be performed by the Contractor at his/her own expense. The lime rock shall be obtained from approved sources. The pits shall be operated in such a manner that a clean and uniform material will be secured.

211-3.2 EQUIPMENT. All equipment necessary for the proper construction of this work shall be on the project, in first-class working condition, and approved by the Engineer before construction is permitted to start.

211-3.3 PREPARING UNDERLYING COURSE. The underlying course shall be checked and accepted by the Engineer before placing and spreading operations are started. Any ruts or soft yielding places caused by improper

drainage conditions, hauling, or any other cause shall be corrected at the Contractor's expense before the base course is placed thereon. Material shall not be placed on frozen subgrade.

211-3.4 PLACING AND SPREADING. All base course material shall be placed on the prepared underlying course and compacted in layers to the thickness shown on the plans. The depositing and spreading of the material on the prepared course or on a completed layer shall commence where designated and shall progress without breaks. The material shall be deposited and spread in lanes in a uniform layer and without segregation of size to such loose depth that, when compacted, the layer shall have the required thickness. When more than one layer is required, the construction procedure described herein shall apply similarly to each layer, excepting the scarifying and rerolling of the surface which shall apply to only the top layer.

The rock shall be transported to locations where it is to be used over rock previously placed and dumped at the end of the preceding spread. It shall then be spread uniformly with shovels, forks, or approved mechanical spreaders especially constructed for this purpose. In no case shall rock be dumped directly onto the underlying course. Transporting over the underlying course will not be permitted, except as directed, in which case it must be protected by planking if rutting occurs. During the dumping and spreading operations, the rock shall be brought to the proper moisture content to obtain maximum density. If water is added, it shall be uniformly mixed to the full depth of the course by discing. All segregated areas of fine or coarse rock shall be removed and replaced with well-graded rock, and approved by the Engineer. Lime rock shall not be spread when the subgrade is in an unsuitable condition.

The lime rock base course shall be constructed in a layer not less than 4 inches (100 mm) nor more than 6 inches (150 mm) of compacted thickness. The base course shall be constructed in lanes or strips parallel with the centerline of the paved area.

During the placing operation, sufficient caution shall be exercised to prevent the incorporation of subgrade, subbase, or shoulder material in the lime rock.

211-3.5 ROLLING. Immediately after completion of the spreading operations, the base material shall be thoroughly compacted. The number, type, and weight of rollers shall be sufficient to compact the mixture to the required density.

The field density of the compacted material shall be at least 100 percent of the maximum density of laboratory specimens prepared from samples of the base material delivered to the jobsite. The laboratory specimens shall be compacted and tested in accordance with **[ ]**. The in-place field density shall be determined in accordance with ASTM D 1556. The moisture content of the material at the start of compaction shall not be below nor more than 1-1/2 percentage points above the optimum moisture content.

*** * * \

surface is removed, leaving a granular or porous condition that will allow free penetration of the prime material. The material planed from the base shall be removed from the base area.

If at any time the underlying material becomes churned up and mixed with the base course material, the Contractor shall, without additional compensation, dig out and remove the mixture, reshape and compact the underlying course, and replace the materials removed with clean rock which shall be watered and rolled until satisfactorily compacted.

Where cracks, checks, or failures appear in the base, either before or after priming and before the surface course is laid, the Contractor shall remove such cracks, checks, or failures by rescarifying, reshaping, watering, rolling, and adding lime rock where necessary.

211-3.7 SURFACE TOLERANCE. After the course has been completely compacted, the surface shall be tested for smoothness and accuracy of grade and crown. Any portion lacking the required smoothness or failing in accuracy of grade or crown shall be scarified, reshaped, recompacted, and otherwise manipulated as the Engineer may direct until the required smoothness and accuracy are obtained. The finished surface shall not vary more than 3/8 inch (9 mm) from a 16-foot (4.8 mm) straightedge when applied to the surface parallel with, and at right angles to, the centerline. In testing surface of the harder lime rocks, measurement of clearances from the straightedge shall not include small holes caused by individual pieces being pulled out by the grader.

211-3.8 THICKNESS. The thickness of the base course shall be determined by depth tests or elevations taken at intervals in such a manner that each test shall represent 300 square yards (250 square meters), or it shall be as otherwise directed by the Engineer. The depth tests shall be made by test holes through the base at least 3 inches (75 mm) in diameter. Where the base deficiency is more than 1/2 inch (12 mm), the Contractor shall correct such areas by scarifying and adding rock. The base shall be scarified, rock added, and tapered a distance of 100 feet (30 m) in each direction from the edge of the deficient area for each inch of rock added. The affected area shall then be watered, bladed, rolled, and brought to a satisfactory state of compaction, required thickness, and cross section. The thickness of the base in the affected area shall be remeasured by depth tests or elevations. The operations of scarifying, adding rock, and rerolling shall continue until the base thickness is within the 1/2-inch (12 mm) tolerance of base thickness. The final base thickness of the reconditioned area shall be used to determine the average job thickness.

The average job thickness shall be the average of the depth measurement as above outlined and shall be within 1/4 inch (6 mm) of the thickness shown on the typical cross section. On individual depth measurements, thicknesses more than 1/2 inch (12 mm) in excess of that shown on the plans shall be considered as specified thickness plus 1/2 inch (12 mm) in computing the average job thickness. The Contractor shall replace, at his/her expense, the lime rock removed from test holes.

211-3.9 PROTECTION. Work on the base course shall not be accomplished during freezing temperatures nor when the subgrade is wet. When the aggregate contains frozen materials or the underlying course is frozen, the construction shall be stopped.

Hauling equipment may be routed over completed portions of the base course, provided no damage results and provided that such equipment is routed over the full width of the base course to avoid rutting or uneven compaction. However, the Engineer in charge shall have full and specific authority to stop all hauling over completed or partially completed base course when, in his/her opinion, such hauling is causing damage. Any damage resulting to the base course from routing equipment over the base course shall be repaired by the Contractor at his/her own expense.

211-3.10 MAINTENANCE. Following the completion of the base course, the Contractor shall perform all maintenance work necessary to keep the base course in a condition satisfactory for priming. After priming, the surface shall be kept clean and free from foreign material. The base course shall be properly drained at all times. If cleaning is necessary, or if the prime coat becomes disturbed, any work or restitution necessary shall be performed at the expense of the Contractor.

METHOD OF MEASUREMENT

211-4.1 The quantity of lime rock base course to be paid for shall be the number of cubic yards (cubic meters) of base material placed, bonded, and accepted in the completed base course. The quantity of base course material shall be measured in final position, based upon depth tests taken as directed by the Engineer, at the rate of 1 depth test for each 300 square yards (250 square meters) of base course, or by means of average end areas on the complete work computed from elevations to the nearest 0.01 foot (3 mm). On individual depth measurements, thicknesses more than 1/2 inch (12 mm) in excess of that shown on the plans shall be considered as the specified thickness plus 1/2 inch (12 mm) in computing the yardage for payment.

BASIS OF PAYMENT

211-5.1 Payment shall be made at the contract unit price per cubic yard (cubic meter) for lime rock base course. This price shall be full compensation for furnishing all materials and for all preparation, hauling, and placing of these materials, and for all labor, equipment, tools, and incidentals necessary to complete the item.

The cost of removing cracks and checks including the labor and material for repriming, and the additional lime rock necessary for crack elimination, will not be paid for separately but shall be included in the contract price per cubic yard (cubic meter) for lime rock base course.

Payment will be made under:

Item P-211-5.1 Lime rock base course per cubic yard (cubic meter)

TESTING REQUIREMENTS

ASTM C 136 Sieve Analysis of Fine and Coarse Aggregates

ASTM D 698 Moisture-Density Relations of Soils and Soil Aggregate Mixtures Using 5.5-lb (2.49-kg) Rammer and 12-in (305 mm) Drop

ASTM D 1556 Density of Soil in Place by the Sand-Cone Method

ASTM D 1557 Test for Laboratory Compaction Characteristics of Soil Using Modified Effort

ASTM D 4318 Liquid Limit, Plastic Limit, and Plasticity Index of Soils

END OF ITEM P-211

ITEM P-212 SHELL BASE COURSE

DESCRIPTION

212-1.1 This item shall consist of a base course composed of shell and binder constructed on a prepared underlying course in accordance with these specifications and shall conform to the dimensions and typical cross section shown on the plans.

MATERIALS

212-2.1 MATERIALS. The shell shall consist of durable particles of ``dead'' oyster or clam shell. The base material shall consist of oyster shell, together with an approved binding or filler material, blended or processed to produce a uniform mixture complying with the specifications for gradation, soil constants, and compaction capability. Clam shell may be used only in combination with oyster shell in the proportion up to and including 50%.

The shell shall be reasonably clean and free from excess amounts of clay or organic matter such as leaves, grass, roots, and other objectionable and foreign material.

The gradation of the blended or processed material shall meet the requirements of the gradation given in the following table, when tested in accordance with ASTM C 136.

Sieve Designation (square openings)	Percentage by Weight Passing Sieves
3 inch (75.0 mm)	100
3/4 inch (19.0 mm)	60-90
No. 4 (4.75 mm)	15-55
No. 200 (0.075 mm)	0-15

That portion of the material, including the blended filler, passing a No. 40 (0.42 mm) mesh sieve shall be known as soil binder and shall have a liquid limit of not more than 25 and a plasticity index of not more than 8 as determined by ASTM D 4318.

If necessary, the Contractor shall blend or combine materials so that the final processed material meets all the specifications. The Contractor shall make such modifications in materials and methods as are necessary to secure a material that is capable of being compacted into a dense and well-bonded base without an excess of soil binder.

212-2.2 FILLER FOR BLENDING. If filler, in addition to that naturally present in the base course material, is necessary for satisfactory bonding of the material, or for changing the soil constants of the material passing the No. 40 (0.42 mm) mesh sieve, or for correcting the gradation to the limitations of the specified gradation, it shall be uniformly blended with the base course material on the pavement or at the plant. The material for such purpose shall be obtained from sources approved by the Engineer and shall be of a gradation necessary to accomplish the specified gradation in the final processed material.

CONSTRUCTION METHODS

212-3.1 SOURCES OF SUPPLY. The Contractor shall notify the Engineer, sufficiently in advance, of the intended source of supply of shell. the shell shall be obtained from approved sources. The material in the stockpile shall be handled in a manner that will secure a uniform and satisfactory product.

212-3.2 EQUIPMENT. All equipment necessary for the proper construction of this work shall be on the project, in first-class working condition, and approved by the Engineer before construction is permitted to start.

The processing plant shall be designed, constructed, operated, and capable of thoroughly mixing the shell, binder, and water in the directed proportions to produce base material of the gradation and consistency required.

212-3.3 PREPARING UNDERLYING COURSE. The underlying course shall be checked and accepted by the Engineer before placing and spreading operations are started. Any ruts or soft yielding places caused by improper drainage conditions, hauling, or any other cause shall be corrected at the Contractor's expense before the base course is placed thereon. Material shall not be placed on frozen subgrade or subbase.

212-3.4 PLANT MIXING. The base material shall be uniformly blended and mixed in an approved central or travel mixing plant. The shell, together with any blended material, shall be thoroughly mixed with the required amount of water. After the mixing is complete, the material shall be transported to, or spread on, the underlying course without undue loss of the moisture content.

212-3.5 PLACING AND SPREADING. The base course material that is correctly proportioned or that has been processed in a central plant shall be placed on the prepared underlying course and compacted in the thickness shown on the plans. The depositing and spreading of the material shall commence where designated and shall progress without breaks. The materials shall be deposited and spread in lanes in a uniform layer and without segregation of size to such loose depth that, when compacted, the layer shall have the required thickness. The material shall be spread by spreader boxes or other approved devices that shall distribute the material in a uniform layer. Dumping from vehicles in piles requiring rehandling will not be permitted. hauling over the uncompacted base course shall not be permitted.

212-3.6 TRAVEL PLANT MIX. When the use of a travel plant is approved, sufficient quantities and proportions of all material necessary shall be used to provide a base mixture that conforms to the specified gradation, quality, and thickness. If a windrow travel plant is employed for mixing, the aggregate shall be placed in windrows parallel to the pavement centerline. If a traveling plant is used which mixes previously spread aggregates in-place, the material shall be spread to a thickness that may be readily handled by the machine and that will develop the proper thickness for each layer. The base material shall be of satisfactory moisture content to obtain maximum density.

After the mixing has been completed, the base material shall be spread to the required depth and width by a self-powered blade grader, mechanical spreader, or other approved method. In spreading, care shall be taken to prevent cutting into the underlying layer. The material shall be bladed, disced, and dragged if necessary until a smooth, uniform surface is obtained true to line, grade, and cross section and in condition for compacting.

212-3.7 MIXED IN-PLACE. When specified or permitted, the base materials may be proportioned and mixed or blended in-place on the underlying course. the different layers shall be spread and placed in the following manner with the relative proportions of the components of the mixture designated by the Engineer.
The base aggregate shall be deposited and spread evenly on the subgrade to a uniform thickness and width. Then the binder or filler shall be deposited and spread evenly over the first layer. There shall be as many layers of materials added as the Engineer may direct to obtain the required base mixture.

After the required materials have been placed, they shall be thoroughly mixed and blended using approved graders, discs, harrows, or rotary-tillers, supplemented by other suitable equipment if necessary. The mixing shall continue until the mixture is uniform throughout. Areas of segregated material shall be corrected by the addition of binder or filler material and then thoroughly remixed. If necessary, water in the required amount shall be uniformly applied as directed by the Engineer prior to and during the mixing operations to maintain the material at the proper moisture content. When the mixing and blending has been completed, the material shall be spread in a uniform layer which, when compacted, will meet the requirements for thickness and typical cross section.

212-3.8 GENERAL METHODS FOR PLACING. The base course shall be constructed in layers not less than 4 inches (100 mm) nor more than 6 inches (150 mm) of compacted thickness. The aggregate, as spread, shall be of uniform gradation with no pockets of fine or coarse materials. Unless otherwise permitted by the Engineer, the aggregate shall not be spread more than 2,000 square yards (186 square meters) in advance of the rolling. Any necessary sprinkling shall be kept within this limit. No material shall be placed in snow or on a soft, muddy, or frozen course.

When more than one layer is required, the construction procedure described herein shall apply similarly to each layer.

The Engineer shall conduct tests to determine the maximum density and the proper moisture content of the base material, and this information will be available to the Contractor. The base material shall be brought to a satisfactory moisture content when rolling is started and any minor variations prior to or during rolling shall be corrected by sprinkling or aeration.

During placing and spreading operations, sufficient caution shall be exercised to prevent the incorporation of subgrade, subbase, or shoulder material into the base course mixture.

212-3.9 COMPACTION. Immediately after completion of the spreading operations, the base course shall be thoroughly compacted. The number, type, and weight of rollers shall be sufficient to compact the mixture to the required density.

The field density of the compacted material shall be at least 100 percent of the maximum density of laboratory specimens prepared from samples of the base material delivered to the jobsite. The laboratory specimens shall be compacted and tested in accordance with **[ ]**. The in-place field density shall be determined in accordance with ASTM D 1556. The moisture content of the material at the start of compaction shall not be below nor more than 1-1/2 percentage points above the optimum moisture content.

* * * *

METHOD OF MEASUREMENT

212-4.1 The quantity of shell base course to be paid for shall be the number of cubic yards (cubic meters) of base course material placed, bonded, and accepted in the completed base course. The quantity of base course material shall be measured in final position based upon depth tests or cores taken as directed by the Engineer, at the rate of 1 depth test for each 300 square yards (28 square meters) of base course, or by means of average end areas on the complete work computed from elevations to the nearest 0.01 foot (3 mm). On individual depth measurements, thicknesses more than 1/2 inch (12 mm) in excess of that shown on the plans shall be considered as specified thickness, plus 1/2 inch (12 mm) in computing the yardage for payment. Base materials shall not be included in any other excavation quantities.

BASIS OF PAYMENT

212-5.1 Payment shall be made at the contract unit price per cubic yard (cubic meter) for shell base course. This price shall be full compensation for furnishing all materials and for all preparation, hauling, and placing of these materials, and for all labor, equipment, tools, and incidentals necessary to complete the item.

Payment will be made under:

Item P-212-5.1 Shell Base Course—per cubic yard (cubic meter)

TESTING REQUIREMENTS

ASTM C 136 Sieve Analysis of Fine and Coarse Aggregates

ASTM D 698 Moisture-Content Relations of Soils and Soil Aggregate Mixtures Using 5.5-lb (2.49-kg) Rammer and 12-in (305 mm) Drop

ASTM D 1556 Density of Soil in Place by the Sand-Cone Method

ASTM D 1557 Test for Laboratory Compaction Characteristics of Soil Using Modified Effort

ASTM D 4318 Liquid Limit, Plastic Limit, and Plasticity Index of Soils

END OF ITEM P-212

ITEM P-213 SAND-CLAY BASE COURSE

DESCRIPTION

213-1.1 This item shall consist of a base course composed of approved selected material, constructed on a prepared underlying course in accordance with these specifications and shall conform to the dimensions and typical cross section shown on the plans.

MATERIALS

213-2.1 SAND-CLAY. The materials shall be a mixture of clay and mineral aggregate. This mixture shall consist of topsoil, sand-clay, sand-clay gravel, disintegrated granite, or other approved selected aggregate, and it shall contain sufficient binder material so blended or processed as to produce a uniform mixture complying with the requirements of these specifications.

The materials shall be uniform and free from excess amounts of clay or organic matter such as leaves, grass, roots, and other objectionable or foreign substances. The coarse aggregate (particles coarser than a No. 4 mesh (4.75 mm) sieve) shall consist of hard, durable pieces or fragments of stone or gravel.

The gradation of the blended or processed material shall meet the requirements of one of the gradations given in the following table, when tested in accordance with ASTM C 136.

	Percentage by Weight	
Sieve designation	Passing Sieves	
1-1/2 inch (38.5 mm)	100	100
1 inch (25.0 mm)	85-100	85-100
No. 4 (4.75 mm)	45-75	65-100
No. 10 (2.0 mm)	30-60	60-100
No. 40 (0.42 mm)	10-40	20-70
No. 200 (0.075 mm)	2-15	4-25

The fraction passing the No. 40 (0.42 mm) mesh sieve shall be referred to as binder. The fraction passing the No. 200 (0.075 mm) mesh sieve shall be less than one-half the fraction passing the No. 40 (0.42 mm) mesh sieve. The material passing the No. 40 mesh sieve shall have a plasticity index not to exceed 6 and have a liquid limit of not more than 25, when tested in accordance with ASTM D 4318, for gradation A; plasticity index shall not exceed 4 and the liquid limit shall not exceed 25 for gradation B.

213-2.2 FILLER FOR BLENDING. If filler, in addition to that naturally present in the base course material, is necessary for satisfactory bonding of the material, or for changing the soil constants of the material passing the No. 40 (0.42 mm) mesh sieve, or for correcting the gradation to the limitations of the specified gradation, it shall be uniformly blended with the base course material. The material for such purpose shall be obtained from sources approved by the Engineer and, when used, shall be of a gradation necessary to accomplish the specified gradation in the finally processed material.

CONSTRUCTION METHODS

213-3.1 OPERATION IN PITS. All work involved in clearing and stripping pits, including the handling of unsuitable material shall be performed by the Contractor at his/her expense. The base material shall be obtained from approved pits or other approved sources. The material in the pits shall be excavated and handled in a manner that assures a uniform and satisfactory product.

213-3.2 EQUIPMENT. All equipment necessary for the proper construction of this work shall be on the project, in first-class working condition, and approved by the Engineer before construction is permitted to start.

The processing equipment shall be designed, constructed, operated, and capable of thoroughly mixing all materials and water in the directed proportions to produce a base course of the gradation and consistency required.

213-3.3 PREPARING UNDERLYING COURSE. The underlying course shall be checked and accepted by the Engineer before placing and spreading operations are started. Any ruts or soft yielding places caused by improper drainage conditions, hauling, or any other cause shall be corrected at the Contractor's expense before the base course is placed thereon. Material shall not be placed on frozen subgrade or subbase.

213-3.4 PLANT MIXING. The base material shall be uniformly blended and mixed in an approved central or travel mixing plant. The sand-clay, together with any blended material, shall be thoroughly mixed with the required amount of water. After the mixing is complete, the base material shall be transported to, and spread on, the underlying course without undue loss of the moisture content.

213-3.5 PLACING AND SPREADING. The base course material that is correctly proportioned or that has been processed in a plant shall be placed on the prepared underlying course and compacted in the thickness shown on the plans. The depositing and spreading of the material shall commence where designated and shall progress without breaks. The material shall be deposited and spread in lanes in a uniform layer and without segregation of size to such loose depth that, when compacted, the layer shall have the required thickness. The material shall be spread by spreader boxes, or other approved devices, equipped to distribute the material in a uniform layer.

When approved, the material may be dumped in piles, but it shall be spread immediately. Hauling over the uncompacted base course shall not be permitted.

213-3.6 TRAVEL PLANT MIX. When the use of a travel plant is approved, sufficient quantities and proportions of all material necessary shall be used to provide a base mixture that conforms to the specified gradation, quality, and thickness. If a windrow travel plant is employed for mixing, the sand-clay shall be placed in windrows parallel to the pavement centerline. If a traveling plant is used which mixes previously spread material in-place, the sand-clay shall be spread to a thickness that may be readily handled by the machine and that will develop the proper thickness for each layer. The base material shall be of a satisfactory moisture content to obtain maximum density.

After mixing has been completed, the base material shall be spread to the required depth and width by a self-powered blade grader, mechanical spreader, or other approved method. In spreading, care shall be taken to prevent cutting into the underlying layer. The material shall be bladed, disced, and dragged if necessary until a smooth, uniform surface is obtained true to line, grade, and cross section and in condition for compacting.

213-3.7 MIXED IN-PLACE. When the base materials are to be proportioned and mixed or blended in-place, the different layers shall be spread and placed in the following manner with the relative proportions of the components of the mixture designated by the Engineer.

The base aggregate shall be deposited and spread evenly on the subgrade to a uniform thickness and width. Then the binder or filler shall be deposited and spread evenly over the first layer. There shall be as many layers of materials added as the Engineer may direct to obtain the required base mixture.

After the required materials have been placed, they shall be thoroughly mixed and blended using approved graders, discs, harrows, rotary-tillers, supplemented by other suitable equipment if necessary. The mixing shall continue until the mixture is uniform throughout. Areas of segregated material shall be corrected by the addition of binder or filler material and then thoroughly remixed. If necessary, water in the required amount shall be uniformly applied as directed by the Engineer prior to and during the mixing operation to maintain the material at the proper moisture content. When the mixing and blending has been completed, the material shall be spread in a uniform layer which, when compacted, will meet the requirements for thickness and typical cross section.

213-3.8 GENERAL METHODS FOR PLACING. The base course shall be constructed in layers not less than 4 inches (100 mm) nor more than 6 inches (150 mm) of compacted thickness. Each layer shall be measured for depth. The material, as spread, shall be of uniform gradation with no pockets of fine or coarse materials. Unless otherwise permitted by the Engineer, the base shall not be spread more than 2,000 square yards (186 square meters)

in advance of the rolling. Any necessary sprinkling shall be kept within this limit. No material shall be placed in snow or on a soft, muddy, or frozen course.

When more than one layer is required, the construction procedure described herein shall apply similarly to each layer.

During placing and spreading operations, sufficient caution shall be exercised to prevent the incorporation of subgrade, subbase, or shoulder material into the base course mixture.

213-3.9 COMPACTION. Immediately after completion of the spreading operations, the base material shall be thoroughly compacted. The number, type, and weight of rollers shall be sufficient to compact the mixture to the required density.

The field density of the compacted material shall be at least 100 percent of the maximum density of laboratory specimens prepared from samples of the base material delivered to the jobsite. The laboratory specimens shall be compacted and tested in accordance with **[ ]**. The in-place field density shall be determined in accordance with ASTM D 1556. The moisture content of the material at the start of compaction shall not be below nor more than 1-1/2 percentage points above the optimum moisture content.

* * * *

METHOD OF MEASUREMENT

213-4.1 The quantity of sand-clay base course to be paid for shall be the number of cubic yards (cubic meters) of base course material placed, bonded, and accepted in the completed base course. The quantity of base course material shall be measured in final position based upon depth tests or cores taken as directed by the Engineer, at the rate of 1 depth test for each 300 square yards (28 square meters) of base course, or by means of average end areas on the complete work computed from elevations to the nearest 0.01 foot (3 mm). On individual depth measurements, thicknesses more than 1/2 inch (12 mm) in excess of that shown on the plans shall be considered as the specified thickness, plus 1/2 inch (12 mm) in computing the yardage for payment. Base materials shall not be included in any other excavation quantities.

BASIS OF PAYMENT

213-5.1 Payment shall be made at the contract unit price per cubic yard (cubic meter) for sand-clay base course. This price shall be full compensation for furnishing all materials and for all preparation, hauling, and placing of these materials, and for all labor, equipment, tools, and incidentals necessary to complete the item.

Payment will be made under:

Item P-213-5.1 Sand-Clay Base Course—per cubic yard (cubic meter)

TESTING REQUIREMENTS

ASTM C 136	Sieve Analysis of Fine and Coarse Aggregates
ASTM D 698	Moisture-Density Relations of Soils and Soil Aggregate Mixtures Using 5.5-lb (2.49-kg) Rammer and 12-in (305 mm) Drop
ASTM D 1556	Density of Soil in Place by the Sand-Cone Method
ASTM D 1557	Test for Laboratory Compaction Characteristics of Soil Using Modified Effort
ASTM D 2167	Density and Unit Weight of Soil in Place by the Rubber Ballon Method
ASTM D 4318	Liquid Limit, Plastic Limit, and Plasticity Index of Soils

END OF ITEM P-213

ITEM P-217 AGGREGATE-TURF PAVEMENT

DESCRIPTION

217-1.1 This item shall consist of an aggregate-turf pavement composed of a base course of soil-bound crushed stone, soil-bound gravel, or soil-bound sand, and a seedbed of suitable soil or combination of soil and aggregate, constructed on a prepared subgrade or a previously constructed underlying course in accordance with these specifications, and shall conform to the dimensions and typical cross section shown on the plans.

This item may include the furnishing and applying of fertilizer, lime, top-soil, or other plant nutrients; the furnishing and planting of seed; and the furnishing and spreading of mulch. When any of these turfing materials are required, the quality, quantity, and construction methods shall be in accordance with applicable FAA Turf Specifications. When turf is to be established, the seedbed soil or topsoil shall be a natural friable soil, possessing characteristics of the best locally obtainable soils, which can produce a fairly heavy growth of crops, grass, or other vegetation.

The prepared composite mixture of aggregates used for the base course shall be **[Type A, B, or C, of Table 1][stabilizer aggregate of Table 2 mixed with in-place materials]**.

MATERIALS

217-2.1 STABILIZED MIXES. The designated stabilized base course mixtures shall conform to the following requirements.

Type A – The materials shall be natural or artificial mixtures of clay or soil binder and gravel, stone or sand, as screenings proportioned to meet the requirements specified.

Type B or C – The materials shall be natural or artificial mixtures of gravel, stone, or slag and soil so proportioned as to meet the requirement specified. The aggregate shall consist of clean, hard durable particles of crushed or uncrushed gravel, stone, or slag, and shall be free from soft, thin, elongated, or laminated pieces, and vegetable or other deleterious substances.

The prepared composite mixture used shall meet one of the applicable gradation requirements as follows when tested in accordance with ASTM C 136.

TABLE 1. REQUIREMENTS FOR GRADATION OF MIXTURE

Sieve Designation	Percentage by weight passing sieves		
(square openings)	A	B	C
2 inch (50.0 mm)	0	0	100
1 inch (24.0 mm)	100	100	70-95
3/4 inch (19.0 mm)	0	70-100	
No. 4 (4.75 mm)	0	40-70	
No. 10 (2.00 mm)	60-100	40-70	32-60
No. 20 (.085 mm)	50-90	0	0
No. 40 (0.425 mm)	40-75	20-45	20-40
No. 200 (0.075 mm)	12-30	10-20	10-20

The fraction of the composite mixture passing the No. 200 (0.075 mm) mesh sieve shall be less than two-thirds of the fraction passing the No. 40 (0.425 mm) mesh sieve. the fraction passing the No. 40 (0.425 mm) mesh sieve shall have a liquid limit not greater than 30 and a plasticity index not greater than 8 when tested in accordance with ASTM D 4318.

217-2.2 STABILIZER AGGREGATE. Stabilizer aggregate conforming to one of the gradations specified in Table 2, when tested in accordance with ASTM C 136, shall be placed upon the existing soil or base course in the specified quantity per square yard (square meter). The aggregate shall be uniformly blended with the soil or base

course material to the depth required or as shown on the plans. The aggregate shall consist of crushed stone, crushed or uncrushed gravel, or crushed slag, and it shall have a percent of wear not more than 60 at 500 revolutions as determined by ASTM C 131. The aggregate shall be free from soft, thin, elongated, or laminated pieces, disintegrated material, or other deleterious substances.

Where sand, as existing subgrade or base, requires stabilization, it shall be secured by the addition of clay or lime rock. The operations of spreading and mixing shall be handled as stated under construction methods.

TABLE 2. REQUIREMENTS FOR GRADATION OF STABILIZER AGGREGATE

Sieve designation	**Percentage by weight passing sieves**		
(square openings)	**D**	**E**	**F**
2 inch (50.0 mm)		100	
1-1/2 inch (37.5 mm)	100		
1 inch (24.0 mm)	90-100		
1/2 inch (12.5 mm)		0-15	100
No. 4 (4.75 mm)	20-50		85-100
No. 10 (2.00 mm)	0-10		
No. 100 (0.150 mm)			0-30

CONSTRUCTION METHODS

217-3.1 OPERATION IN PITS. All work involved in clearing and stripping pits, including handling of unsuitable material, shall be performed by the Contractor at his/her own expense. The base or binder material shall be obtained from approved sources. The material in the pits shall be excavated and handled in a manner that will secure a uniform and satisfactory product.

217-3.2 EQUIPMENT. All equipment necessary for the proper construction of this work shall be on the project in first-class working condition and approved by the Engineer before construction is permitted to start.

217-3.3 PREPARING SUBGRADE. Before any base course material is placed, the subgrade or underlying course shall be prepared and conditioned as specified. The underlying course shall be checked and accepted by the Engineer before placing and spreading operations are started.

217-3.4 PLACING MATERIALS.

a. All new material shall be placed on the prepared course and compacted in layers of the thickness shown on the plans. The depositing and spreading of the material on the prepared and completed layer shall commence where designated and shall progress without breaks. The material shall be deposited and spread in lanes in a uniform layer and without segregation of size to such loose depth that, when compacted, the layer will have the required thickness. The material shall be spread with approved equipment. When it is necessary to combine materials from different sources, it may be done either at the pits, in a processing plant prior to delivery of the material, or on the course in the proper proportions and in successive spreadings that give the required gradation and thickness of layer. If the combining is done on the course, the mixing shall be as specified hereinafter.

b. When it is necessary to blend new material with material on the existing surface, the existing surface shall first be scarified lightly and bladed to uniform grade and cross section as shown on the plans. After blading, and when necessary, the existing surface shall be further scarified and/or pulverized to provide sufficient loose material of the required depth to be mixed with the added material.

217-3.5 SPREADING AND MIXING.

a. Materials that have been mixed and processed in a processing plant at the pits, or elsewhere, shall be delivered and spread to the required depth.

b. Following the placing of the required materials being combined on the base course, the total base material shall be thoroughly pulverized and mixed by approved rotary-pulverizing mixers. The moisture content of the aggregate and soil binder shall be as specified by the Engineer to secure thorough mixing and the required compaction. The mixing shall produce a homogeneous mass of the specified gradation and soil characteristics to form a base course of the desired qualities. When the mixing is completed, the material shall be spread in a uniform layer which, when compacted, shall meet the requirements for thickness and typical cross section.

217-3.6 ROLLING. Immediately after completion of the spreading operations, the material shall be thoroughly compacted. The number, type, and weight of rollers shall be sufficient to compact the material to the required density.

The field density of the compacted material shall be at least 90 percent of the maximum density of laboratory specimens prepared from samples of the subbase material taken from the material delivered to the jobsite. The laboratory specimens shall be compacted and tested in accordance with ASTM D 698. The in-place field density shall be determined in accordance with ASTM D 1556 or ASTM D 2167. The moisture content of the material at the start of compaction shall not be below nor more than 1-1/2 percentage points above the optimum moisture content.

217-3.7 SURFACE TEST, THICKNESS, AND MAINTENANCE. The surface shall not deviate more than 1/2 inch (12 mm) when tested with a 16-foot (4.8 m) straightedge applied parallel with, and at right angles to, the centerline. Any deviation in excess of this amount shall be corrected by loosening, adding, or removing material, reshaping, and recompacting.

The thickness of the base course shall be determined by depth tests or cores taken at intervals in such manner that each test shall represent not more than 500 square yards (418 square meters). When the base deficiency exceeds 1/2 inch (12 mm), it shall be corrected. The Contractor shall replace, at his/her expense, the base material where borings have been taken for test purposes.

The surface of the base course shall be maintained and kept in a well-drained condition until the construction of another course. Sprinkling, blading, and rolling shall be performed when necessary to prevent the base material from becoming unbonded.

217-3.8 TURF-SURFACING. Following the construction of the soil-aggregate base, the Contractor shall prepare the seedbed for the turf. If topsoil is to be placed, the surface of the base course shall be loosened slightly, as directed by the Engineer. If seeding is to be done without topsoiling, the surface of the base shall be loosened sufficiently to prepare a seedbed. This can be accomplished by discing, harrowing, rotary-tilling, or other approved methods, and should be to a depth not less than 1 inch (25 mm) nor greater than 3 inches (75 mm). Any topsoil shall be spread to the depth as required. The seedbed preparation, applying lime, fertilizer and water, seeding, rolling and mulching, shall be performed in accordance with the specification requirements.

METHOD OF MEASUREMENT

217-4.1. Soil-aggregate base course shall be measured by the number of cubic yards (cubic meters) of base course material placed, bonded, and accepted in the completed base course. The quantity shall be measured in final position based on depth tests or cores, or by means of average end areas on the completed work.

Stabilizer aggregate shall be measured by the number of cubic yards (cubic meters) of aggregate furnished, placed, and accepted in the completed base course.

When approved materials in-place are utilized in the base course, the preparation and incorporation of other materials in the base mixture shall be measured as a conditioning and mixing operation. Conditioning shall be measured by the number of square yards (square meters) of such material prepared and incorporated in the mix, completed, and accepted.

[Topsoil shall be measured by the number of cubic yards (cubic meters) of topsoil removed, placed, and spread in the accepted work.]

[Lime and fertilizer shall be measured by the number of tons (kg) or 100-pound (45.4 kg) sacks, of the quality specified in the bid schedule, furnished, incorporated, and accepted.]

[Seeding shall be measured by the number of acres seeded, and accepted.]

[Watering for planting shall be measured by the number of 1,000-gallon (4000 liters) units of water measured by an approved water meter or in the vehicle at the point of delivery, furnished and applied as specified or ordered.]

[Mulching shall be measured by the number of acres mulched, and accepted.]

BASIS OF PAYMENT

217-5.1 Payment shall be made at the contract unit price per cubic yard (cubic meter) for soil-aggregate base course; at the contract unit price per cubic yard (cubic meter) for stabilizer aggregate; at the contract unit price per square yard (cubic meter) for conditioning operation; at the contract unit price per cubic yard (square meter) for topsoil; at the contract unit price per ton (kg) for lime; at the contract unit price per ton (kg) for fertilizer; at the contract unit price per acre for seeding; at the contract unit price per 1,000-gallon (4000 liter) unit for watering; and at the contract unit price per acre for mulching. These prices shall be full compensation for furnishing all materials and for all preparation, hauling, and placing of these materials; and for all labor, equipment, tools, and incidentals necessary to complete the item.

Payment will be made under:

Item P-217-5.1 Soil Aggregate Base Course—per cubic yard (cubic meter)

Item P-217-5.2 Stabilizer Aggregate—per cubic yard (cubic meter)

Item P-217-5.3 Conditioning Operation—per square yard (cubic meter)

Item P-217-5.4 Topsoil—per cubic yard (cubic meter)

Item P-217-5.5 Lime—per ton (kg)

Item P-217-5.6 Fertilizer—per ton (kg)

Item P-217-5.7 Seeding—per acre

Item P-217-5.8 Watering—per 1,000-gallon (4000 liter) unit

Item P-217-5.9 Mulching—per acre

* * * *

ASTM C 136 Sieve Analysis of Fine and Coarse Aggregates

ASTM D 698 Moisture-Density Relations of Soils and Soil-Aggregate Mixtures Using 5.5 lb (2.49 kg) Rammer and 12-inch (300 mm) Drop

ASTM D 1556 Density of Soil in Place by the Sand-Cone Method

END OF ITEM P-217

Intentionally Left Blank

PART IV – RIGID BASE COURSES
ITEM P-301 SOIL-CEMENT BASE COURSE

DESCRIPTION

301-1.1 This item shall consist of constructing a base course by uniformly mixing together soil, portland cement, and water. The mixed material shall be spread, shaped, and compacted in accordance with these specifications and in conformity to the dimensions and typical cross section shown on the plans. Tests shall be required for each approved soil that will be included in the treated layer.

Runway, taxiway, or apron pavements shall be built in a series of parallel lanes using a plan of processing that reduces longitudinal and transverse joints to a minimum.

MATERIALS

301-2.1 PORTLAND CEMENT. Portland cement shall conform to the requirements of ASTM **[ ]**.

* * * *

The specified cement content for construction shall be that at which the weight loss of the specimens subjected to 12 cycles of either the wet-dry or the freeze-thaw is not more than 14% for granular soils, 10% for the more plastic granular and silty soils, and 7% for clay soils.

The compressive strength of soaked specimens should increase both with age and with increase in cement content.

CONSTRUCTION METHODS

301-4.1 WEATHER LIMITATIONS. The soil-cement base shall not be mixed or placed while the atmospheric temperature is below 35° F (2° C) or when conditions indicate that the temperature may fall below 35° F (2° C) within 24 hours, or when the weather is foggy or rainy, or when the soil or subgrade is frozen.

301-4.2 EQUIPMENT. The soil-cement may be constructed with any equipment that will meet the requirements for soil pulverization, cement application, mixing, water application, incorporation of materials, compaction, finishing, and curing specified herein.

301-4.3 PREPARATION. The area to be paved shall be graded and shaped to conform to the grades and typical cross section shown on the plans. Any soft or yielding areas in the subgrade shall be removed and replaced with acceptable soil and compacted as specified.

301-4.4 PULVERIZATION. The soil for the base course shall be so pulverized that at the completion of moist-mixing, 100% by dry weight passes a 1-inch (25 mm) sieve and a minimum of 80% passes a No. 4 sieve, exclusive of gravel or stone retained on the No. 4 sieve.

301-4.5 CEMENT APPLICATION, MIXING, AND SPREADING. Mixing of the soil, cement, and water shall be accomplished either by the mixed-in-place or the central-plant-mixed method.

The percentage of moisture in the soil, at the time of cement application, shall not exceed the quantity that will permit a uniform and intimate mixture of soil and cement during mixing operations, and it shall not exceed the specified optimum moisture content for the soil-cement mixture.

Method A – Mixed-in-place. The specified quantity of cement shall be spread uniformly on the soil.

Cement that has been displaced shall be replaced before mixing is started. After the cement has been applied, it shall be mixed with the soil. Mixing shall continue until the cement has been sufficiently blended with the soil to prevent the formation of cement balls when water is applied.

Immediately after the soil and cement have been mixed, water shall be incorporated into the mixture. Excessive concentrations of water on or near the surface shall be avoided. A water supply and pressure distributing equipment shall be provided that will assure the application within 3 hours of all mixing water on the section being processed. After all mixing water has been applied, mixing shall continue until a uniform and intimate mixture of soil, cement, and water has been obtained.

Method B – Central plant mixed. The soil, cement, and water shall be mixed in a pugmill, either of the batch or continuous-flow type. The plant shall be equipped with feeding and metering devices that will add the soil, cement, and water into the mixer in the specified quantities. Soil and cement shall be mixed sufficiently to prevent cement balls from forming when water is added. Mixing shall continue until a uniform and intimate mixture of soil, cement, and water is obtained.

The mixture shall be hauled to the project in trucks equipped with protective covers. The mixture shall be placed on the moistened subgrade in a uniform layer by an approved spreader(s). Not more than 30 minutes shall elapse between the placement of soil-cement in adjacent lanes.

The layer of soil-cement shall be uniform in thickness and surface contour and of such quantity that the completed base will conform to the required grade and cross section. Dumping of the mixture in piles or windrows upon the subgrade will not be permitted.

Not more than 60 minutes shall elapse between the start of moist mixing and the start of compaction of soil-cement.

301-4.6 COMPACTION. Immediately upon completion of the spreading operations, the mixture shall be thoroughly compacted. The number, type, and weight of rollers shall be sufficient to compact the mixture to the required density.

The field density of the compacted mixture shall be at least 98 percent of the maximum density of laboratory specimens prepared from samples of the cement-treated base material taken from the material in place. The specimens shall be compacted and tested in accordance with ASTM D 558. The in-place field density shall be determined in accordance with ASTM D 1556. Any mixture that has not been compacted shall not be left undisturbed for more than 30 minutes. The moisture content of the mixture at the start of compaction shall not be below nor more than 2 percentage points above the optimum moisture content. The optimum moisture content shall be determined in accordance with ASTM D 558 and shall be less than that amount which will cause the mixture to become unstable during compaction and finishing.

301-4.7 FINISHING. Finishing operations shall be completed during daylight hours, and the completed base course shall conform to the required lines, grades, and cross section. If necessary, the surface shall be lightly scarified to eliminate any imprints made by the compacting or shaping equipment. The surface shall then be recompacted to the required density.

301-4.8 CONSTRUCTION JOINTS. At the end of each day's run, a transverse construction joint shall be formed by a header or by cutting back into the compacted material to form a true vertical face free of loose material.

The protection provided for construction joints shall permit the placing, spreading, and compacting of base material without injury to the work previously laid. Where it is necessary to operate or turn any equipment on the completed base course, sufficient protection and cover shall be provided to prevent damage to the finished surface. A supply of mats or wooden planks shall be maintained and used as approved and directed by the Engineer.

Care shall be exercised to ensure thorough compaction of the base material immediately adjacent to all construction joints. When spreading or compacting base material adjacent to a previously constructed lane, care shall be taken to prevent injury to the work already constructed.

301-4.10 PROTECTION AND CURING. After the base course has been finished to grade and compacted as specified herein, it shall be protected against drying for a period of 7 days by the application of bituminous material or other acceptable methods. The curing method shall begin as soon as possible, but no later than 24 hours after the completion of finishing operations. The finished base course shall be kept moist continuously until the curing material is placed.

The bituminous material specified shall be uniformly applied to the surface of the completed base course at the rate of approximately 0.2 gallon per square yard (0.92 liter/square meter) with approved heating and distributing equipment. The exact rate and temperature of application to give complete coverage without excessive runoff shall be as specified.

At the time the bituminous material is applied, the surface shall be dense, free of all loose and extraneous material, and shall contain sufficient moisture to prevent penetration of the bituminous material. Water shall be applied in sufficient quantity to fill the surface voids immediately before the bituminous curing material is applied.

The curing material shall be maintained and applied as needed by the Contractor during the 7-day protection period so that all of the soil-cement will be covered effectively during this period.

Finished portions of soil-cement that are used by equipment in constructing an adjoining section shall be protected to prevent equipment from marring or damaging the completed work.

When the air temperature may be expected to reach the freezing point, sufficient protection from freezing shall be given the soil-cement for 7 days after its construction and until it has hardened.

Other curing materials such as moist straw or hay may be used if approved.

301-4.11 CONSTRUCTION LIMITATIONS. When any of the operations after the application of cement are interrupted for more than 30 minutes or when the uncompacted soil-cement mixture is wetted by rain so that the moisture content is exceeded by a small amount, the decision to reconstruct the portion affected shall rest with the Engineer. In the event the uncompacted, rain-wetted mixture exceeds the specified moisture content tolerance, the Contractor shall reconstruct at his/her expense the portion affected. All material along the longitudinal or transverse construction joints not properly compacted shall be removed and replaced, at the Contractor's expense, with properly moistened and mixed soil-cement compacted to specified density.

301-4.12 SURFACE TESTS. The finished surface shall not vary more than 3/8 inch (9 mm) when tested with a 16-foot (4.8 m) straightedge applied parallel with, or at right angles to, the longitudinal axis of the pavement. Any variations in excess of this tolerance shall be corrected by the Contractor, at his/her own expense, and in a manner satisfactory to the Engineer.

301-4.13 THICKNESS. The thickness of the soil-cement base course shall be determined from measurements of cores drilled from the finished base or from thickness measurements at holes drilled in the base at intervals so that each test shall represent no more than 300 square yards (250 square meters). The average thickness of the base constructed during one day shall be within 1/2 inch (12 mm) of the thickness shown on the plans, except that the thickness of any one point may be within 3/4 inch (13 mm) of that shown on the plans. Where the average thickness shown by the measurements made in one day's construction is not within the tolerance given, the Engineer shall evaluate the area and determine if, in his/her opinion, it shall be reconstructed at the Contractor's expense or the deficiency deducted from the total material in place.

301-4.14 MAINTENANCE. The Contractor shall be required to maintain, at his/her own expense, the entire base course within the limits of his/her contract in a condition satisfactory to the Engineer from the time he starts work until all the work has been completed. Maintenance shall include immediate repairs of any defects that may occur either before or after the cement is applied. The work shall be done by the Contractor at his/her own expense and repeated as often as necessary to keep the area intact at all times. Repairs shall be made in a manner that will insure restoration of a uniform surface and the durability of the part repaired. Faulty work must be replaced for the full depth of treatment. Any low areas shall be remedied by replacing the material for the full depth of treatment rather than by adding a thin layer of soil-cement to the completed work.

METHOD OF MEASUREMENT

301-5.1 The quantity of soil-cement base course to be paid for shall be the number of square yards (square meters) of completed and accepted base course.

301-5.2 Portland cement shall be measured by the hundredweight.

BASIS OF PAYMENT

301-6.1 Payment shall be made at the contract unit price per square yard (square meter) for soil-cement base course. This price shall be full compensation for furnishing all materials, except portland cement, and for all preparation, delivering, placing, and mixing of these materials; and for all labor, equipment, tools and incidentals necessary to complete the item.

301-6.2 Payment shall be made at the contract unit price per hundredweight for cement. This price shall be full compensation for furnishing this material and for all delivery, placing, and incorporation of this material, and for all labor, equipment, tools, and incidentals necessary to complete the item.

Payment will be made under:

Item P-301-6.1 Soil-Cement Base Course—per square yard (square meter)

Item P-301-6.2 Portland Cement—per hundredweight

TEST REQUIREMENTS

ASTM C 136 Sieve Analysis of Fine and Coarse Aggregates

ASTM D 558 Moisture-Density Relations of Soil-Cement Mixtures

ASTM D 559 Wetting-and-Drying Tests of Compacted Soil-Cement Mixtures

ASTM D 560 Freezing-and-Thawing Tests of Compacted Soil-Cement Mixtures

ASTM D 1556 Test for Density of Soil In-Place by the Sand Cone Method

AASHTO T 26 Quality of Water to be Used in Concrete

MATERIAL REQUIREMENTS

ASTM C 150 Portland Cement

ASTM D 977 Emulsified Asphalt

ASTM D 202 Cutback Asphalt

ASTM D 239 Cationic Emulsified Asphalt

END OF ITEM P-301

Intentionally Left Blank

ITEM P-304 CEMENT-TREATED BASE COURSE

DESCRIPTION

304-1.1 This item shall consist of a base course composed of mineral aggregate and cement uniformly blended and mixed with water. The mixed material shall be spread, shaped, and compacted in accordance with these specifications and in conformity to the lines, grades, dimensions, and typical cross sections shown on the plans. Runway, taxiway, or apron pavements shall be built in a series of parallel lanes using a plan of processing that reduces longitudinal and transverse joints to a minimum. The freeze-thaw weight loss shall not exceed 14 percent after 12 cycles when tested in accordance with ASTM D 560.

MATERIALS

304-2.1 PORTLAND CEMENT. Portland cement shall conform to the requirements of ASTM **[ ]**.

* * * *

TABLE 1. AGGREGATE CEMENT-TREATED BASE COURSE

Sieve Size	Percentage by Weight Passing Sieves
2 in. (50 mm)	*
No. 4 (4.75 mm)	*
No. 10 (1.80 mm)	*
No. 40 (450 micro-m)	*
No. 80 (210 micro-m)	*

* * * *

TABLE 2. BITUMINOUS MATERIAL

Type and Grade	Specification	Application Temperature	
		Deg. F	Deg. C
Cutback Asphalt			
RC-70	ASTM D 2028	120-160	50-70
RC-250		160-200	70-95
Emulsified Asphalt			
RS-1, SS-1	ASTM D 977	75-130	25-55
CRS-1	ASTM D 2397	75-130	25-55

CEMENT CONTENT

304-3.1 Prior to start of work, laboratory tests of materials submitted by the Contractor shall be made to determine the quantity of cement required in the mix. The cement content for construction shall be that at which the mix develops a 7-day compressive strength of at least 750 psi (5 170 kPa). The testing procedure shall be as follows: mold and cure specimens in accordance with ASTM D 560; soak specimens in water for 4 hours; cap and break specimens in compression in accordance with ASTM D 1633.

* * * *

304-4.4 MIXING. The aggregate shall be proportioned and mixed with cement and water in a central mixing plant. The plant shall be equipped with feeding and metering devices that will introduce the cement, aggregate, and water into the mixer in the quantities specified. Mixing shall continue until a thorough and uniform mixture has been obtained.

304-4.5 PLACING. The mixture shall be transported to the job site in suitable vehicles and shall be deposited on the moistened subbase in uniform layers by means of approved mechanical spreaders. Not more than 60 minutes shall elapse between the start of moist mixing and the start of compaction of the cement-treated mixture on the prepared subgrade.

304-4.6 COMPACTION. Immediately upon completion of the spreading operations, the mixture shall be thoroughly compacted. The number, type, and weight of rollers shall be sufficient to compact the mixture to the required density.

The field density of the compacted mixture shall be at least 98 percent of the maximum density of laboratory specimens prepared from samples of the cement-treated base material taken from the material in place. The specimens shall be compacted and tested in accordance with ASTM D 558. The in-place field density shall be determined in accordance with ASTM D 1556. Any mixture that has not been compacted shall not be left undisturbed for more than 30 minutes. The moisture content of the mixture at the start of compaction shall not be more than plus or minus 1-1/2 points of optimum moisture content. The optimum moisture content shall be determined in accordance with ASTM D 558 and shall be less than that amount which will cause the mixture to become unstable during compaction and finishing.

* * * *

TABLE 3. SLIDING SCALE PAY FACTORS

Average Percent Density	Recommended Percent Payment
98.0 and greater	100
97.0-97.9	95
96.0-96.9	90
95.0-95.9	75
Less than 95.0	reject

Any mixture that has not been compacted shall not be left undistributed for more than 30 minutes. The moisture content of the mixture at the start of compaction shall not be below nor more than 2 percentage points above the optimum moisture content. The optimum moisture content shall be determined in accordance with ASTM D 558 and shall be less than that amount which will cause the mixture to become unstable during compaction and finishing.

* * * *

Finished portions of the base course that are used by equipment in the construction of an adjoining section shall be protected to prevent marring or damaging the completed work. The stabilized area shall be protected from freezing during the curing period.

304-4.12 BONDING PREVENTION LAYER. When the Cement-Treated Base Course (CTB) is to be placed directly beneath Portland Cement Concrete Pavement (PCC) a bond prevention layer shall be required. The entire surface of the CTB shall be coated with a de-bonding compound applied in a quality sufficient to prevent bonding of the PCC pavement to the base course. If an impervious membrane or asphalt emulsion is used as a curing material, it may serve as the bond prevention layer. The Contractor shall be responsible for selecting the de-bonding compound and determining the necessary application rate. The de-bonding compound shall be approved by the Engineer prior to being incorporated into the work.

METHOD OF MEASUREMENT

304-5.1 The quantity of cement-treated base to be paid for will be determined by measurement of the number of **[square yards (square meters)](cubic yards (cubic meters)]** of base actually constructed and accepted by the Engineer as complying with the plans and specifications.

304-5.2 Portland cement will be measured by the hundredweight.

BASIS OF PAYMENT

304-6.1 Payment shall be made at the contract unit price per **[square yard (square meter)][cubic yard (cubic meter)]** for cement-treated base course. This price shall be full compensation for furnishing all materials, except portland cement; for all preparation, manipulation, and placing of these materials; and for all labor, equipment, tools, and incidentals necessary to complete the item.

* * * *

ASTM C 295	Petrographic Examination of Aggregates for Concrete
ASTM D 75	Sampling Aggregates
ASTM D 558	Moisture-Density Relations of Soil-Cement Mixtures
ASTM D 560	Freezing-and-Thawing Tests of Compacted Soil-Cement Mixtures
ASTM D 1556	Density of Soil in Place by the Sand-Cone Method
ASTM D 1633	Compressive Strength of Molded Soil-Cement Cylinders
ASTM D 3665	Random Sampling of Paving Materials
ASTM D 4318	Liquid Limit, Plastic Limit, and Plasticity Index of Soils
AASHTO T 26	Quality of Water to be Used in Concrete

MATERIAL REQUIREMENTS

ASTM C 150	Portland Cement
ASTM C 595	Blended Hydraulic Cements
ASTM D 977	Emulsified Asphalt
ASTM D 2028	Cutback Asphalt
ASTM D 2397	Cationic Emulsified Asphalt

END OF ITEM P-304

Intentionally Left Blank

ITEM P-306 ECONOCRETE BASE COURSE (LEAN MIX CONCRETE BASE COURSE)

DESCRIPTION

306-1.1. This item shall consist of a base course composed of aggregate and cement uniformly blended together and mixed with water. The mixed material shall be spread, shaped and consolidated in accordance with these specifications and in conformity to the lines, grades, dimensions and typical cross sections shown on the plans.

MATERIALS

306-2.1 Aggregate. The aggregate shall be stone or gravel, crushed or uncrushed. The fine aggregate shall be that naturally contained in the aggregate material or may be sand. The aggregate shall consist of hard, durable particles, free from excess flat, elongated, soft pieces, dirt or other objectionable matter. The aggregate may also be a slag suitable for concrete.

A flat particle is one having a ratio of width to thickness greater than five; an elongated particle is one having a ratio of length to width greater than five.

The aggregate shall conform to the gradation shown in Table 1 when tested in accordance with ASTM C 136.

TABLE 1. AGGREGATE – ECONOCRETE BASE COURSE

Sieve Size (square openings)	Percentage by Weight Passing Sieves
2 inches (50.0 mm)	100
1 inch (25.0 mm)	55 - 85
3/4 inch (19.0 mm)	50 - 80
No. 4 (4.75 mm)	30 - 60
No. 40 (0.450 mm)	10 - 30
No. 200 (0.075 mm)	0 - 15

306-2.1.1 Reactivity. Fine and Coarse aggregates to be used in all econocrete shall be evaluated and tested by the Contractor for alkali-aggregate reactivity in accordance with ASTM C 1260. Aggregate used for testing in accordance to ASTM C 1260 shall be the contractor's proposed coarse aggregates (all size groups) and the fine aggregate. The aggregates shall be evaluated in combination and shall match the contractor's proposed mix design proportioning. Test results shall have a measured expansion of less than 0.10 percent at 16 days. Should the test data indicate an expansion of greater than 0.10%, additional testing, by the Contractor utilizing the modified version of ASTM C 1260 shall be performed.

ASTM C 1260 shall be modified as follows to include one of the following options:

a. Utilize the contractor's proposed low alkali Portland cement and Class "F" fly ash in combination for the test proportioning. The laboratory shall use the contractor's proposed percentage of Portland cement and fly ash. The quantity shall be determined that will meet all the requirements of these specifications and that which will lower the expansion to less than 0.10 percent at 16 days. Class "F" fly ash shall be used at a minimum rate of 20 percent of the total cementitious material by mass.

b. Utilize the contractor's proposed low alkali Portland cement and ground granulated blast furnace (GGBF) slag in combination for the test proportioning. The quantity shall be that which will meet all the requirements of these specifications and that which will lower the expansion to less than 0.10 percent at 16 days.

If any of the above options does not lower the expansion to less than 0.10 percent at 16 days, the aggregate(s) shall be rejected and the contractor shall submit new aggregate sources and retest. The results of testing shall be submitted to the Engineer for evaluation and acceptance.

306-2.2 Cementitious Material.

a. Cement shall conform to the requirements of ASTM C 150, Type (II).

Note: Type V should be specified in areas of sulfate soils.

b. Pozzolan. Pozzolan can be used and is required to meet the requirements of ASTM C 618, Class F fly ash.

c. Blast Furnace Slag. Ground Granulated Blast-Furnace (GGBF) can be used. Slag shall conform to ASTM C 989, Grade 100 of 120. GGBF shall be used only at a rate between 25 and 55 percent of the total cementitious material by mass.

306-2.3 Water. Water used in mixing or curing shall be as clean and free of oil, salt, acid, alkali, sugar, vegetable, or other substances injurious to the finished product as possible. Water will be tested in accordance with the requirements of AASHTO T 26. Water known to be of potable quality may be used without testing.

306-2.4 Cover Material for Curing. Curing materials shall conform to one of the following specifications:

a. Liquid membrane-forming compounds for curing econocrete shall conform to the requirements of ASTM C 309, Type 2, Class A or B.

b. Asphalt emulsion for curing econocrete shall conform to the requirements of ASTM D 977, Type SS-1h.

306-2.5 Admixtures. The use of any material added to the econocrete mix shall be approved by the Engineer. The Contractor shall submit certificates indicating that the material to be furnished meets all the requirements listed below. In addition, the Engineer may require the Contractor to submit complete test data showing that the material to be furnished meets all the requirements of the cited specifications.

a. Air-Entraining Admixtures. Air-entraining admixtures shall meet the requirements of ASTM C 260.

b. Water Reducing Admixtures. Water-reducing, set-controlling admixtures shall meet the requirements of ASTM C 494, Type A, water reducing or Type D, water-reducing and retarding. Water-reducing admixtures shall be added at the mixer separately from air-entraining admixtures in accordance with the manufacturer's printed instructions. The air-entrainment agent and the water-reducing admixture shall be compatible.

306-2.6 Mix Design. Concrete shall be designed to meet the criteria contained in Table 2. Compressive strength test specimens shall be prepared in accordance with ASTM C 192 and tested in accordance with ASTM C 39. Prior to the start of paving operations the Contractor shall submit a mix design showing the proportions of materials used and the compressive strength obtained from the econocrete at 7 and 28 days. The mix design shall include copies of test reports, including test dates, and a complete list of materials including type, brand, source, and amount of; cement, fly ash, ground slag, coarse aggregate, fine aggregate, water, and admixtures. The fineness modulus of the fine aggregate as well as the slump and the air content of the mix shall also be shown. The mix shall be designed using the procedures contained in Chapter 7 of the Portland Cement Association's manual, "Design and Control of Concrete Mixtures." Mix designs older than 90 days shall not be used.

After the mix design is established, at least five samples of econocrete shall be taken and tested for compressive strength using the established mix design. Each sample shall consist of four cylinders, two to be tested at 7 days and two to be tested at 28 days. The standard deviation and average values of the test results shall be included in the submittal to the Engineer.

Should a change in sources be made, or admixtures added or deleted from the mix, a new mix design must be submitted to the Engineer for approval.

Air-entraining admixture shall be added in such a manner that will ensure uniform distribution of the agent throughout the batch. The air content of freshly mixed air-entrained econocrete shall be based upon trial mixes with the materials to be used in the work adjusted to produce a mixture of the required plasticity and workability. Air content shall be determined by testing in accordance with ASTM C 231 for gravel and stone coarse aggregate and ASTM C 173 for slag and other highly porous coarse aggregate. Testing for slump shall be in accordance with ASTM C 143. The freeze-thaw weight loss should not exceed 14 percent when tested in accordance with ASTM D 560.

TABLE 2. ECONOCRETE BASE COURSE REQUIREMENTS FOR MIX DESIGN

Slump		Air Content (percent)		Compressive Strength		
				minimum		maximum
minimum	maximum	minimum	maximum	@ 7 days	@ 28 days	@ 28 days
1.0 inches (25 mm)	3.0 inches (75 mm)	4.0	8.0	500 psi (3,445 kPa)	750 psi (5,167 kPa)	1,200 psi (8,268 kPa)

306-2.7 Submittals. Prior to placement of the econocrete base course, the Contractor shall submit certified test reports to the Engineer for those materials proposed for use during construction. The certification shall show the appropriate ASTM or AASHTO specifications or tests for the material, the name of the company performing the tests, the date of the tests, the test results and a statement that the material did or did not comply with the applicable specifications. Tests older than six months shall not be used. The submittal shall include the following:

a. name of the suppliers or vendors
b. sieve analysis of aggregates
c. cement
d. admixtures
e. freeze-thaw weight loss
f. type of equipment to be used for hauling and placing econocrete
g. cover materials for curing
h. mix design
    - water/cement ratio
    - water content
    - cement content
    - fly ash content
    - slump
    - air content
    - compressive strengths at 7 days and 28 days
    - mix identification number

Submittals shall comply with procedures set forth in the “Shop Drawing and Sample Submittals” section of the General Conditions. Allow 10 days for review by the Engineer, excluding delivery time to and from the Contractor.

No econocrete shall be placed until the submittal has been accepted by the Engineer and returned to the Contractor.

CONSTRUCTION METHODS

306-3.1 Proportioning.

See paragraph P-306-2.6 Mix Design.

306-3.2 Equipment. Equipment and tools necessary for handling materials and performing all parts of the work shall be approved by the Engineer as to design, capacity and mechanical condition. The equipment shall be at the job site before the start of construction operations for examination and approval.

a. **Batch Plant and Equipment**. The batch plant and equipment shall conform to the requirement of ASTM C 94.

b. **Mixers**.

(1) General. Econocrete may be mixed at a central plant, or wholly or in part in truck mixers. Each mixer shall have attached in a prominent place a manufacturer's nameplate showing the capacity of the drum in terms of volume of mixed concrete and the speed of rotation of the mixing drum or blades.

(2) Central Plant Mixer. Central mixers shall conform to the requirements of ASTM C 94.

The mixers shall be examined daily for changes in condition due to accumulation of hard concrete, mortar, or wear of blades. The pickup and throwover blades shall be replaced when they have worn down 3/4 inch (13 mm) or more. The Contractor shall have a copy of the manufacturer's design on hand showing dimensions and arrangement of blades in reference to original height and depth.

(3) Truck Mixers and Truck Agitators. Truck mixers used for mixing and hauling econocrete and truck agitators used for hauling central-mixed econocrete shall conform to the requirements of ASTM C 94.

(4) Nonagitator Trucks. Nonagitating hauling equipment shall conform to the requirements of ASTM C 94.

c. Finishing Equipment.

(1) Finishing Machine. The finishing machine shall be equipped with one or more oscillating-type transverse screeds.

(2) Vibrators. For side-form construction, vibrators may be either the surface pan type for pavements less than 8 inches (200 mm) thick or the internal type with either immersed tube or multiple spuds for the full width of the slab. They may be attached to the spreader or the finishing machine or they may be mounted on a separate carriage. They shall not come in contact with the joint, subgrade or side forms. The frequency of the surface vibrators shall not be less than 3,500 vibrations per minute and the frequency of the internal type shall not be less than 7,000 vibrations per minute for spud vibrators. When spud-type internal vibrators are used adjacent to the side forms, they shall have a frequency of not less than 3,500 vibrations per minute.

For slip-form construction the paver shall vibrate the econocrete for the full width and depth of the strip of pavement being placed. Vibration shall be accomplished by internal vibrators with a frequency range variable between 7,000 and 12,000 vibrations per minute. The amplitude of vibration shall be between 0.025 and 0.06 inches (0.6 mm and 1.5 mm)

The number, spacing, frequency and eccentric weights shall be provided as necessary to achieve an acceptable density and finishing quality. Adequate power to operate all vibrators at the weight and frequency required for a satisfactory finish shall be available on the paver. The internal vibrators may be supplemented by vibrating screeds operating on the surface of the econocrete. The frequency of surface vibrators shall not be less than 3,500 vibrations per minute. The Contractor shall furnish a tachometer or other suitable device for measuring the frequency of the

vibrators. The vibrators and tamping elements shall be automatically controlled so that they shall be stopped as forward motion ceases. Any override switch shall be of the spring-loaded, momentary-contact type.

d. Concrete Saw. When sawing of joints are specified, the Contractor shall provide sawing equipment adequate in number of units and power to complete the sawing to the required dimensions and at the required rate. The Contractor shall provide at least one standby saw in good working order. An ample supply of saw blades shall be maintained at the site of the work at all times during sawing operations. The Contractor shall provide adequate artificial lighting facilities for night sawing. All of this equipment shall be on the job both before and at all times during econocrete placement.

e. Forms. Straight side forms shall be made of steel having a thickness of not less than 7/32 inch (6 mm) and shall be furnished in sections not less than 10 feet (3m) in length. Forms shall have a depth equal to the prescribed edge thickness of the econocrete without horizontal joint and a base width equal to the depth of the forms. Flexible or curved forms of proper radius shall be used for curves of 100-feet (30 m) radius or less. Flexible or curved forms shall be of a design acceptable to the Engineer. Forms shall be provided with devices for secure settings so that when in place they will withstand, without visible spring or settlement, the impact and vibration of the consolidating and finishing equipment. Flange braces shall extend outward on the base not less than two-thirds the height of the form. Forms with battered top surfaces and bent, twisted, or broken forms shall be removed from the work. Repaired forms shall not be used, except as approved by the Engineer. The top face of the form shall not vary from a true plane more than 1/8 inch in 10 feet (3 m), and the upstanding leg shall not vary more than 1/4 inch (6mm). The forms shall contain provisions for locking the ends of abutting sections together tightly for secure setting.

f. Slip-Form Pavers. The paver shall be fully energized, self-propelled, and designed for the specific purpose of placing, consolidating, and finishing the econocrete pavement, true to grade, tolerances, and cross section. It shall be of sufficient weight and power to construct the maximum specified paving lane width as shown in the plans, at adequate forward speed, without transverse, longitudinal, or vertical instability or without displacement. The paver shall be equipped with electronic or hydraulic horizontal and vertical control devices.

306-3.3 Form Setting. Forms shall be set sufficiently in advance of the econocrete placement to ensure continuous paving operation. After the forms have been set to correct grade, the grade shall be thoroughly tamped, either mechanically or by hand, at both the inside and outside edges of the base of the forms. Forms shall be staked into place with not less than 3 pins for each 10-foot (3 m) section. A pin shall be placed at each side of every joint.

Form sections shall be tightly locked and shall be free from play or movement in any direction. The forms shall not deviate from true line by more than 1/4 inch (6 mm) at any joint. Forms shall be so set that they will withstand, without visible spring or settlement, the impact and vibration of the consolidating and finishing equipment. Forms shall be cleaned and oiled prior to the placing of econocrete.

The alignment and grade elevations of the forms shall be checked and corrections made by the Contractor immediately before placing the econocrete. When any form has been disturbed or any grade has become unstable, the form shall be reset and rechecked.

306-3.4 Conditioning of Underlying Course, Slip-Form Construction. The compacted subbase on which the pavement will be placed shall be widened approximately 3 feet (0.9 m) to extend beyond the paving machine track to support the paver without any noticeable displacement. After the subbase has been placed and compacted to the required density, the areas that will support the paving machine and the area to be paved shall be trimmed to the proper elevation and profile by means of a properly designed machine. The grade of the subbase on which the econocrete pavement is to be placed shall be controlled automatically by steel guide wires erected and maintained by the Contractor. If the density of the subbase is disturbed by the trimming operations, it shall be corrected by additional compaction before the econocrete is placed. The grading operations should be delayed as long as possible and immediately precede paving insofar as practicable, particularly if the subbase is subjected to haul traffic. If traffic is allowed to use the prepared grade, the grade shall be checked and corrected immediately before the placement of econocrete. The prepared grade shall be well moistened with water, without saturating, immediately ahead of econocrete placement to prevent rapid loss of moisture from the econocrete. In cold weather, the underlying course shall be protected so that it will be entirely free of frost when econocrete is placed.

306-3.5 Conditioning of Underlying Course, Side-Form Construction. The prepared subbase shall be well moistened with water, without saturating, immediately ahead of econocrete placement to prevent rapid loss of moisture from the econocrete. Ruts or depressions in the subbase caused by hauling or usage of other equipment shall be filled as they develop with suitable material and thoroughly compacted by rolling. A multi-pin template weighing not less than 1,000 pounds (450 kg) per 20 feet (6 m) or other approved template shall be provided and operated on the forms immediately in advance of the placing of the econocrete. The template shall be propelled only by hand and not attached to a tractor or other power unit. Templates shall be adjustable so that they may be set and maintained at the correct contour of the underlying course. The adjustment and operation of the template shall be such as will provide an accurate retest of the grade before placing the econocrete thereon. All excess material shall be removed. Low areas may be filled and compacted to a condition similar to that of the surrounding grade, or filled with econocrete integral with the pavement. In cold weather, the underlying course shall be protected so that it will be entirely free from frost when the econocrete is paced. The use of chemicals to eliminate frost in the underlying material will not be permitted. The template shall be maintained in accurate adjustment, at all times by the Contractor, and should be checked daily. The work described under the foregoing paragraphs does not constitute a regular subgrading operation, but rather a final accurate check of the underlying course.

306-3.6 Handling, Measuring and Batching Material. The batch plant site, layout, equipment and provisions for transporting material shall assure a continuous supply of material to the work.

Stockpiles shall be built up in layers of not more than 3 feet (0.90 m) in thickness. Each layer shall be completely in place before beginning the next layer and shall not be allowed to "cone" down over the next lower layer. Aggregates from different sources and of different grading shall not be stockpiled together. Improperly placed stockpiles will not be accepted by the Engineer.

Aggregates shall be handled from stockpiles or other sources to the batching plant in such manner to secure the specified grading of the material. Aggregates that have become segregated or mixed with earth or foreign material shall not be used. All aggregates produced or handled by hydraulic methods and washed aggregates, shall be stockpiled or binned for draining at least 12 hours before being batched. Rail shipments requiring more than 12 hours will be accepted as adequate binning only if the car bodies permit free drainage. The fine aggregate and coarse aggregate shall be separately weighed into hoppers in the respective amounts set by the Engineer in the job mix except where a unit aggregate such as crusher run or pit run are used, in which case a single stockpile will be satisfactory. Cement shall be measured by weight. Separate scales and hopper, with a device to positively indicate the complete discharge of the batch of cement into the batch box, or container, shall be used for weighing the cement.

When required by the contract or when permitted, batching plants shall be equipped to proportion aggregates and bulk cement, by weight, automatically using interlocked proportioning devices of an approved type. The Contractor shall use a suitable method of handling the cement from weighing hopper to transporting container or into the batch itself for transportation to the mixer, such as a chute, boot or other approved device, to prevent loss of cement. The device shall be arranged to provide positive assurance of the actual presence in each batch of the entire cement content specified.

When cement is placed in contact with the aggregates, batches may be rejected unless mixed within 1 1/2 hours of such contact. Batching shall be conducted so that the results in the weights of each material required will be within a tolerance of 1 percent for cement and 2 percent for aggregates.

Water may be measured either by volume or by weight. The accuracy of measuring the water shall be within plus or minus 1 percent of required amounts. Unless the water is to be weighed, the water-measuring equipment shall include an auxiliary tank from which the measuring tank shall be filled.

Methods and equipment for adding air-entraining agent or other admixtures to the batch, when required, shall be approved by the Engineer. All admixtures shall be measured into the mixer with an accuracy of plus or minus 3 percent.

306-3.7 Mixing Econocrete. The econocrete may be mixed at the work site, in a central mix plant or in truck mixers. The mixer shall be of an approved type and capacity. Mixing time shall be measured from the time all materials, except water, are emptied into the drum. Ready-mixed econocrete shall be mixed and delivered in accordance with the requirements of ASTM C 94, except that the minimum required revolutions of the mixing speed for transit mixed econocrete may be reduced to not less than that recommended by the mixer manufacturer. The number of revolutions recommended by the mixer manufacturer shall be indicated on the manufacturer's serial plate attached to the mixer. The Contractor shall furnish test data acceptable to the Engineer verifying that the make and model of the mixer will produce uniform econocrete conforming to the provisions of ASTM C 94 at the reduced number of revolutions shown on the serial plate.

When mixed at the work site or in a central mix plant, the mixing time shall not be less than 50 seconds nor more than 90 seconds. Mixing time ends when the discharge chute opens. Transfer time in multiple drum mixers is included in mixing time. The content of an individual mixer drum shall be removed before a succeeding batch is emptied therein.

The mixer shall be operated at the drum speed as shown on the manufacturer's nameplate on the approved mixer. Any econocrete mixed less than the specified time shall be discarded at the Contractor's expense. The volume of econocrete mixed per batch shall not exceed the mixer's nominal capacity in cubic feet (cubic meters), as shown on the manufacturer's standard rating plate on the mixer. An overload up to 10 percent above the mixer's nominal capacity may be permitted provided test data for segregation and uniform consistency are satisfactory, and provided no spillage of econocrete takes place. The batch shall be charged into the drum so that a portion of the mixing water shall enter in advance of the cement and aggregates. The flow of water shall be uniform and all water shall be in the drum by the end of the first 15 seconds of the mixing period. The throat of the drum shall be kept free of such accumulations as may restrict the free flow of materials into the drum.

Mixed econocrete from the central mixing plant shall be transported in truck mixers, truck agitators or nonagitating trucks. The time elapsing from the time water is added to the mix until the econocrete is deposited in place at the work site shall not exceed 45 minutes when the econocrete is hauled in nonagitating trucks nor 90 minutes when the econocrete is hauled in truck mixers or truck agitators. Retempering econocrete by adding water or by other means will not be permitted, except when econocrete is delivered in transit mixers. With transit mixers, additional water may be added to the batch materials and additional mixing performed to increase the slump to meet the specified requirements, if permitted by the Engineer. All these operations must be performed within 45 minutes after the initial mixing operations, and the water-cement ratio must not be exceeded. Admixtures for increasing the workability or for accelerating the set will be permitted only when approved by the Engineer. At the option of the Contractor or when specified by the Engineer, a water-reducing admixture may be used.

306-3.8 Limitations of Mixing. No econocrete shall be mixed, placed or finished when the natural light is insufficient, unless an adequate and approved artificial lighting system is operated.

Unless authorized in writing by the Engineer, mixing and econocreting operations shall be discontinued when a descending air temperature in the shade and away from artificial heat reaches 40 degrees Fahrenheit (4 degrees C) and shall not be resumed until an ascending air temperature in the shade and away from artificial heat reaches 35 degrees Fahrenheit (2 degrees C).

When econocreting is authorized during cold weather, the aggregates may be heated by either steam or dry heat prior to being placed in the mixer. The apparatus used shall heat the mass uniformly and shall be arranged to preclude the possible occurrence of overheated areas which might be detrimental to the materials. Unless otherwise authorized, the temperature of the mixed econocrete shall not be less than 50 degrees Fahrenheit (10 degrees C) at the time of placement in the forms.

If the air temperature is 35 degrees Fahrenheit (2 degrees C) or less at the time of placing econocrete, the Engineer may require the water and/or the aggregates to be heated to not less than 70 degrees Fahrenheit (2 degrees C) nor more than 150 degrees Fahrenheit (66 degrees C). Econocrete shall not be placed on frozen subbase nor shall frozen aggregates be used in the econocrete.

During the periods of warm weather when the maximum daily air temperature exceeds 85 degrees Fahrenheit (30 degrees C), the following precautions shall be taken. The forms and/or the underlying material shall be sprinkled with water immediately before placing the econocrete. The econocrete shall be placed at the coolest temperature practicable, and in no case shall the temperature of the econocrete when placed exceed 100 degrees Fahrenheit (38 degrees C). The aggregates and/or mixing water shall be cooled, as necessary, to maintain the econocrete temperature at or below the specified maximum.

306-3.9 Placing Econocrete.

a. Side-Form Method. For the side-form method, the econocrete shall be deposited on the moistened grade to require as little rehandling as possible. Truck mixers, truck agitators or non-agitating hauling equipment equipped with means for discharge of econocrete without segregation of the materials, shall unload the econocrete on the grade to prevent segregation of the materials. Placing shall be continuous between transverse joints without the use of intermediate bulkheads. Necessary hand spreading shall be done with shovels - not rakes. Workers shall not be allowed to walk in the freshly mixed econocrete with boots or shoes coated with earth or foreign substances.

b. Slip-Form Methods. For the slip-form method, the econocrete shall be placed with an approved crawler-mounted, slip-form paver designed to spread, consolidate, and shape the freshly placed econocrete in one complete pass of the machine so that a minimum of hand finishing will be necessary to provide a pavement in conformance with requirements of the plans and specifications. Side forms and finishing screeds shall be adjustable to the extent required to produce the specified pavement edge and surface tolerance. The side forms shall be of dimensions, shape and strength to support the econocrete laterally for a sufficient length of time so that no appreciable edge slumping will occur. Final finishing shall be accomplished while the econocrete is still in the plastic state.

306-3.10 Field Test Specimens. Econocrete samples shall be furnished by the Contractor and shall be taken in the field to determine the consistency, air content, and strength of the econocrete. The samples shall be taken in the presence of the Engineer, at locations determined by the Engineer.

a. Testing and Acceptance in Regard to Slump and Air Content. The econocrete shall be accepted with respect to slump and air content if the slump and air content test results are within the limits in Table 3 based on the target values of the approved mix design. Slump tests shall be made in accordance with ASTM C 143. Air Tests shall be made in accordance with ASTM C 231.

TABLE 3. ACCEPTANCE LIMITS

Slip Form:	
Slump	+0.5 to -1.5 inch (+13 to -38 mm)
Air	+ 1.8 percent
Fixed Form:	
Slump	+1.0 to -1.5 inch (+25 to -38 mm)
Air	+ 1.8 percent

An air and slump test shall be performed on the first three truckloads of econocrete produced at the start of operations each day and the first three truckloads produced after any scheduled shutdown, or any non-scheduled shutdown. Additional air and slump tests shall be performed each time a sample is taken for a strength test and when requested by the Engineer. If the first test on a truckload of econocrete is not within the specification limits, a second test on the same truckload shall be made immediately. If the second test is within the specification limits, the econocrete will be accepted with respect to slump test and entrained air content. If the second test is <u>not</u> within the specification limits, the truckload shall be rejected.

b. Testing and Acceptance in Regard to Compressive Strength. Econocrete shall be accepted for strength on a lot basis. A lot shall consist of one day's placement, except when one day's placement exceeds 2,000 square yards (1,672 square meters) in which case the day's placement shall be split into two or more equal lots not exceeding 2,000 square yards (1,672 square meters) each. When one day's scheduled placement is less than 500 square yards (418 square meters) the lot shall be divided into two equal sublots. When one day's placement is more than 500 square yards (418 square meters) the lot shall be divided into four equal sublots.

One sample shall be taken for each sublot from the plastic concrete delivered to the job site. Sampling locations shall be determined by the Engineer in accordance with random sampling procedures contained in ASTM D 3665. The econocrete shall be sampled in accordance with ASTM C 172.

At least two test cylinders shall be made from each sample to provide one compressive strength test. Cylinders shall be made in accordance with ASTM C 31 and the compressive strength of each cylinder shall be determined in accordance with ASTM C 39. Since the strength level of econocrete at an early age is considerably lower than pavement concrete, special care is required in handling test specimens. Cylinders should be field cured 48 hours prior to moving.

The compressive strength for each sublot shall be computed by averaging the results of the two test cylinders representing that sublot. The test age will be 7 days.

When operational conditions cause a lot to be terminated before the specified four samples have been taken for the lot, the following procedure will be used to adjust the lot size and the number of tests for the lot.

Where two or three sublots have been produced, they shall constitute a lot. Where one sublot has been produced, it shall be incorporated into the next lot or the previous lot and the total number of sublots shall be used in the acceptance criteria calculation, i.e., n = 5.

The compressive strength of the lot shall be the average compressive strength of the sublots in the lot.

The compressive strength of the econocrete shall meet all of the following requirements:

(1) The compressive strength of the lot, tested at 7 days, shall be greater than 500 psi (3,445 kPa);

(2) Not more than 20 percent of the individual cylinders in a given lot, tested at 7 days, shall have a compressive strength less than 500 psi (3,445 kPa).

Specimens that are obviously defective shall not be considered in the determination of the strength. When it appears that the test specimens will fail to conform to the requirements for strength, the Engineer shall have the right to order changes in the econocrete sufficient to increase the strength to meet the requirements at the Contractor’s expense.

When a given lot of econocrete fails to meet these compressive strength requirements, the entire lot shall be replaced at the Contractor’s expense.

306-3.11 Joints. All construction joints in econocrete base shall be offset at least 6 inches (150 mm) from joints in the surface course.

306-3.12 Final Strike-Off, Consolidation, and Finishing.

a. Sequence. The sequence of operations shall be strike-off, consolidation, and finishing.

b. Strike-off, Consolidation, and Finishing. The econocrete shall be placed with a slip-form paver capable of striking-off, consolidating, and finishing in one pass of the equipment. Form-paving methods shall be used at the Contractor’s option.

c. Final Finishing. Hand finishing will not be permitted except in areas where the mechanical finisher cannot operate. The surface of the pavement shall not be textured.

d. Surface Testing and Corrections. After the econocrete base has been struck off and consolidated and while the econocrete is still plastic, it shall be tested for trueness with a 16-foot (4.8 m) straightedge provided by the Contractor. The surface shall show no variations of more than 3/8 inch (9 mm) from a 16-foot (4.8 m) straightedge laid in any location parallel with or at right angles to the longitudinal axis of the centerline. Any surplus material shall be removed and the surface refinished by hand. Any depressions shall be immediately filled with freshly mixed econocrete, struck off, consolidated and refinished.

306-3.13 Curing. Immediately after the finishing operations have been complete and marring of the econocrete will not occur, the entire surface of the newly placed econocrete shall be cured in accordance with one of the methods below. Failure to provide sufficient cover material of whatever kind the Contractor may elect to use or lack of water to adequately take care of both curing and other requirements shall be cause for immediate suspension of econocreting operations. The econocrete shall not be left exposed for more than 1/2 hour during the curing period. The following are alternate approved methods for curing econocrete pavements.

a. Impervious Membrane Method. The entire surface of the pavement shall be sprayed uniformly with 2 coats of white pigmented curing compound. The first coat shall be applied immediately after the finishing of the surface and before the set of the econocrete has taken place. The second coat shall be applied as a bond breaker, after the econocrete is set and within 48 hours prior to placement of the overlaying pavement.

The curing compound shall not be applied during rainfall. Curing compound shall be applied by mechanical sprayers under pressure at the rate of 1 gallon (4 liters) to not more than 200 square feet (18 square meters). The spraying equipment shall be of the fully atomizing type equipped with a tank agitator. At the time of use, the compound shall be in a thoroughly mixed condition with pigment uniformly dispensed throughout the vehicle. During application, the compound shall be stirred continuously by effective mechanical means. Hand spraying of odd widths or shapes and concrete surfaces exposed by the removal of forms will be permitted. Curing compound shall not be applied to the inside faces of joints to be sealed, but approved means shall be used to ensure proper curing for 72 hours. The curing compound shall be of such character that the film will harden within 30 minutes after application. Should the film become damaged from any cause within the required curing period, the damaged portions shall be repaired immediately with additional compound. Upon removal of side forms, the sides of the exposed slabs shall be protected immediately to provide a curing treatment equal to that provided for the surface.

b. Asphalt Emulsion. The entire surface of the pavement shall be uniformly sprayed with 2 coats of asphalt emulsion. The first coat shall be applied before the set of the econocrete has taken place. The second coat shall be applied as a bond breaker, after the econocrete is set and within 48 hours prior to placement of the overlaying pavement.

The asphalt emulsion shall be applied by distributing equipment at the rate of approximately 0.2 gallons (0.95 liters) per square yard (square meter). Should the film become damaged from any cause within the required curing period, the damaged portions shall be repaired immediately with additional asphalt emulsion.

c. Curing in Cold Weather. When the average daily temperature is below 40 degrees F (4 degrees C), curing shall consist of covering the newly laid pavement with not less than 12 inches (300 mm) of loose, dry hay or straw, or equivalent protective curing authorized by the Engineer, which shall be retained in place for 10 days. The hay or straw shall be secured to avoid being blown away.

When econocrete is being placed and the air temperature may be expected to drop below 35 degrees F (2 degrees C), a sufficient supply of straw, hay, grass, or other suitable blanketing material such as burlap or polyethylene shall be provided along the work. Any time the temperature may be expected to reach the freezing point during the day or night, the material so provided shall be spread over the pavement to a sufficient depth to prevent freezing of the econocrete.

The period of time such protection shall be maintained shall not be less than 10 days. The contractor shall be responsible for the quality and strength of the econocrete placed during cold weather, and any econocrete injured by frost action shall be removed and replaced at the Contractor's expense.

306-3.14 Protection of Econocrete. The Contractor shall protect the pavement against traffic caused by the Contractor's employees and agents. This shall include watchmen to direct traffic and erection and maintenance of warning signs, lights, pavement bridges or crossovers, etc. The plans or special provisions will indicate the location and type of device or facility required to protect the work and provide adequately for traffic. Any damage to the econocrete occurring prior to final acceptance shall be repaired or replaced at the Contractor's expense. In order that the econocrete be properly protected against the effects of rain before the econocrete is sufficiently hardened, the Contractor will be required to have available at all time materials for the protection of the edges and surfaces of the unhardened econocrete. Such protective materials shall consist of rolled polyethylene sheeting at least 4 mils (0.1 mm) thick of sufficient length and width to cover the plastic econocrete slab and any edges. The sheeting may be mounted on either the paver or a separate movable bridge from which it can be unrolled without dragging over the plastic econocrete surface. When rain appears imminent, all paving operations shall stop and all available personnel shall begin covering the surface of the unhardened econocrete with the protective covering.

Traffic shall not be permitted on the econocrete until a minimum compressive strength of 500 psi (3,445 kPa) has been developed as determined from test specimens.

306-3.15 Testing and Acceptance for Thickness. Econocrete will be accepted for thickness on a lot basis. A lot will consist of one day's placement, except when one day's placement exceeds 2,000 square yards (1,672 square meters) in which case the day's placement shall be split into two or more equal lots not exceeding 2,000 square yards (1,672 square meters) each. One core shall be taken at random by the Engineer in each lot. When the measurement of the core from a lot is not deficient by more than 0.5 inch (12 mm) from the plan thickness, full payment will be made. When such measurement is deficient more than 0.5 inch (12 mm) and not more than 1.0 inch (25 mm) from the plan thickness, two additional cores shall be taken at random and used in determining the average thickness for that lot. The thickness of the cores shall be determined by average caliper measurement of cores tested in accordance with ASTM C 174. When the average measurement of the 3 cores is not deficient by more than 0.5 inch (12 mm) from the plan thickness, full payment will be made. If the average measurement of the three cores is deficient by more than 0.5 inch (12 mm) from the plan thickness, the entire lot shall be removed and replaced at the Contractor's expense or be permitted to remain in place at an adjusted payment of 75 percent of the contract unit price.

When the average thickness is deficient by more than 1.0 inch (25 mm), the entire lot shall be removed and replaced at the Contractor's expense.

METHOD OF MEASUREMENT

306-4.1. The quantity to be paid for will be the number of square yards (square meters) of econocrete completed and accepted as measured complete in place, less deductions as required in paragraph P-306-3.15 for deficient thickness.

BASIS OF PAYMENT

306-5.1. The accepted quantities of econocrete will be paid for at the contract unit price per square yard (square meter). The price and payment shall be full compensation for furnishing and placing all materials, provided, however, that for any pavement found deficient in thickness as specified in paragraph P-306-3.15 the reduced unit price shall be paid.

Payment will be made under:

P-306	6-inch Econocrete Base Course	Per Square Yard

TESTING REQUIREMENTS

AASHTO T 26	Method of Test for Quality of Water to be Used in Concrete
ASTM C 31	Practice for Making and Curing Concrete Test Specimens in the Field
ASTM C 39	Test Method for Compressive Strength of Cylindrical Concrete Specimens
ASTM C 42	Test Method for Obtaining and Testing Drilled Cores and Sawed Beams of Concrete
ASTM C 136	Test Method for Sieve or Screen Analysis of Fine and Coarse Aggregates
ASTM C 143	Test Method for Slump of Hydraulic-Cement Concrete
ASTM C 173	Test Method for Air Content of Freshly Mixed Concrete by the Volumetric Method
ASTM C 174	Test Method for Measuring Length of Drilled Concrete Cores
ASTM C 192	Practice for Making and Curing Concrete Test Specimens in the Laboratory
ASTM C 231	Test Method for Air Content of Freshly Mixed Concrete by the Pressure Method
ASTM D 560	Test Methods for Freezing and Thawing Compacted Soil-Cement Mixtures

MATERIAL REQUIREMENTS

ASTM C 33	Specification for Concrete Aggregates
ASTM C 94	Specification for Ready-Mixed Concrete
ASTM C 150	Specification for Portland Cement
ASTM C 260	Specification for Air-Entraining Admixtures for Concrete
ASTM C 309	Specification for Liquid Membrane-Forming Compounds for Curing Concrete
ASTM C 494	Specification for Chemical Admixtures for Concrete
ASTM C 618	Specification for Coal Fly Ash and Raw or Calcined Natural Pozzolan for Use as a Mineral Admixture in Concrete
ASTM D 977	Specification for Emulsified Asphalt

END OF ITEM P-306

Intentionally Left Blank

PART V – FLEXIBLE SURFACE COURSES
ITEM P-401 PLANT MIX BITUMINOUS PAVEMENTS

DESCRIPTION

401-1.1 This item shall consist of pavement courses composed of mineral aggregate and bituminous material mixed in a central mixing plant and placed on a prepared course in accordance with these specifications and shall conform to the lines, grades, thicknesses, and typical cross sections shown on the plans. Each course shall be constructed to the depth, typical section, and elevation required by the plans and shall be rolled, finished, and approved before the placement of the next course.

* * * *

Aggregate shall contain at least **[ ]** percent by weight of individual pieces having two or more fractured faces and **[ ]** percent by weight having at least one fractured face. The area of each face shall be equal to at least 75 percent of the smallest midsectional area of the piece. When two fractured faces are contiguous, the angle between the planes of fractures shall be at least 30 degrees to count as two fractured faces. Fractured faces shall be obtained by crushing.

* * * *

amounts of natural sand tends to decrease the stability of the mixture. The requirement for a sand equivalent value of 45 usually limits the use of natural sand; however, the maximum of 15 percent natural sand may be included for locations where low stabilities are a chronic problem.

* * * *

Table A. Binder Grade Selection and Grade Bumping Based on Gross Aircraft Weight.

Aircraft Gross Weight (pounds)	High Temperature Adjustment to Base Binder Grade	
	Pavement Type	
	Runway	Taxiway/Apron
Less than 12,500	--	--
Less than 60,000	--	1
Less than 100,000	--	1
Greater than 100,000	1	2

NOTES:
1. PG grades above a –22 on the low end (e.g. 64–16) are not recommended. Limited experience has shown this to be a poor performer.
2. PG grades below a 64 on the high end (e.g. 58-22) are not recommended. These binders often provide tender tendencies.
3. PG grades above a 76 on the high end (e.g. 82-22) are not recommended. These binders are very stiff and difficult to work and compact.

Grade Specification			
Penetration Grade ASTM D 946	Viscosity Grade ASTM D 3381		Performance Graded Asphalt Institute Superpave Series No. 1(SP-1)
40-50 60-70 85-100 100-120 120-150	AC-5 AC-10 AC-15 AC-20 AC-30 AC-40	AR-1000 AR-2000 AR-4000 AR-8000	In general, the Engineer should choose a PG-asphalt binder that has been approved for use in the vicinity by the State DOT, and is locally available. In general, a high reliability (98 percent) on both the high and low temperature categories is sufficiently conservative.

* * * *

d. Bituminous Material. Test results for bituminous material shall include temperature/viscosity charts for mixing and compaction temperatures.

The certification(s) shall show the appropriate ASTM test(s) for each material, the test results, and a statement that the material meets the specification requirement.

The Engineer may request samples for testing, prior to and during production, to verify the quality of the materials and to ensure conformance with the applicable specifications.

401-2.5 ANTI-STRIPPING AGENT. Any anti-stripping agent or additive if required shall be heat stable, shall not change the asphalt cement viscosity beyond specifications, shall contain no harmful ingredients, shall be added in recommended proportion by approved method, and shall be a material approved by the Department of Transportation of the State in which the project is located.

COMPOSITION

401-3.1 COMPOSITION OF MIXTURE. The bituminous plant mix shall be composed of a mixture of well-graded aggregate, filler and anti-strip agent if required, and bituminous material. The several aggregate fractions shall be sized, handled in separate size groups, and combined in such proportions that the resulting mixture meets the grading requirements of the job mix formula (JMF).

401-3.2 JOB MIX FORMULA. No bituminous mixture for payment shall be produced until a job mix formula has been approved in writing by the Engineer. The bituminous mixture shall be designed using procedures contained in Chapter 5, MARSHALL METHOD OF MIX DESIGN, of the Asphalt Institute's Manual Series No. 2 (MS-2), Mix Design Methods for Asphalt Concrete, sixth edition.

* * * *

* * * *

subsequent cost of the Engineer's approval of the new or modified job mix formula will be borne by the Contractor. There will be no time extension given or considerations for extra costs associated with the stoppage of production paving or restart of production paving due to the time needed for the Engineer to approve the initial, new or modified job mix formula.

* * * *

* * * *

Where locally-available aggregates cannot be economically blended to meet the grading requirements of the gradations shown, the gradations may be modified to fit the characteristics of such local aggregates with approval of the FAA. The modified gradation must produce a paving mixture that satisfies the mix design requirements.

AGGREGATE - BITUMINOUS PAVEMENTS				
Sieve Size	**Percentage by Weight Passing Sieves**			
	1-½" max	**1" max**	**¾ " max**	**½" max**
1-½ in. (37.5 mm)	100	--	--	--
1 in. (24.0 mm)	86-98	100	--	--
¾ in. (19.0 mm)	68-93	76-98	100	--
½ in. (12.5 mm)	57-81	66-86	79-99	100
⅜ in. (9.5 mm)	49-69	57-77	68-88	79-99
No. 4 (4.75 mm)	34-54	40-60	48-68	58-78
No. 8 (2.36 mm)	22-42	26-46	33-53	39-59
No. 16 (1.18 mm)	13-33	17-37	20-40	26-46
No. 30 (0.600 mm)	8-24	11-27	14-30	19-35
No. 50 (0.300 mm)	6-18	7-19	9-21	12-24
No. 100 (0.150 mm)	4-12	6-16	6-16	7-17
No. 200 (0.075 mm)	3-6	3-6	3-6	3-6
Asphalt percent:				
Stone or gravel	4.5-7.0	4.5-7.0	5.0-7.5	5.5-8.0
Slag	5.0-7.5	5.0-7.5	6.5-9.5	7.0-10.5

* * * *

* * * *

requirements or produce a mix that meets the JMF. It will be necessary to reevaluate and redesign the mix using plant-produced aggregates. Specimens shall be prepared and the optimum bitumen content determined in the same manner as for the original design tests.

* * * *

(1) Truck Scales. The bituminous mixture shall be weighed on approved scales furnished by the Contractor, or on certified public scales at the Contractor's expense. Scales shall be inspected and sealed as often as the Engineer deems necessary to assure their accuracy. Scales shall conform to the requirements of the General Provisions, Section 90-01.

In lieu of scales, and as approved by the Engineer, asphalt mixture weights may be determined by the use of an electronic weighing system equipped with an automatic printer that weighs the total paving mixture. Contractor must furnish calibration certification of the weighing system prior to mix production and as often thereafter as requested by the Engineer.

(2) Testing Facilities. The Contractor shall provide laboratory facilities at the plant for the use of the Engineer's acceptance testing and the Contractor's quality control testing. The Engineer will always have priority in the use of the laboratory. The lab shall have sufficient space and equipment so that both testing representatives (Engineer's and Contractor's) can operate efficiently. The lab shall also meet the requirements of ASTM D 3666.

The plant testing laboratory shall have a floor space area of not less than 150 square feet, with a ceiling height of not less than 7-½ feet. The laboratory shall be weather tight, sufficiently heated in cold weather, air-conditioned in hot weather to maintain temperatures for testing purposes of 70 degrees F +/- 5 degrees F. The plant testing laboratory shall be located on the plant site to provide an unobstructed view, from one of its windows, of the trucks being loaded with the plant mix materials.

Laboratory facilities shall be kept clean, and all equipment shall be maintained in proper working condition. The Engineer shall be permitted unrestricted access to inspect the Contractor's laboratory facility and witness quality control activities. The Engineer will advise the Contractor in writing of any noted deficiencies concerning the laboratory facility, equipment, supplies, or testing personnel and procedures. When the deficiencies are serious enough to be adversely affecting the test results, the incorporation of the materials into the work shall be suspended immediately and will not be permitted to resume until the deficiencies are satisfactorily corrected.

As a minimum, the plant testing laboratory shall have:

(a) Adequate artificial lighting
(b) Electrical outlets sufficient in number and capacity for operating the required testing equipment and drying samples.
(c) Fire extinguishers (2), Underwriter's Laboratories approved
(d) Work benches for testing, minimum 2-½ feet by 10 feet.
(e) Desk with 2 chairs
(f) Sanitary facilities convenient to testing laboratory
(g) Exhaust fan to outside air, minimum 12 inch blade diameter
(h) A direct telephone line and telephone including a FAX machine operating 24 hours per day, seven days per week
(i) File cabinet with lock for Engineer
(j) Sink with running water, attached drain board and drain capable of handling separate material
(k) Metal stand for holding washing sieves
(l) Two element hot plate or other comparable heating device, with dial type thermostatic controls for drying aggregates
(m) Mechanical shaker and appropriate sieves (listed in JMF, Table 3) meeting the requirements of ASTM E-11 for determining the gradation of coarse and fine aggregates in accordance with ASTM C 136
(n) Marshall testing equipment meeting ASTM D 6926, ASTM D 6927, automatic compaction equipment capable of compacting three specimens at once and other apparatus as specified in ASTM C 127, D 2172, D 2726, and D 2041
(o) Oven, thermostatically controlled, inside minimum 1 cubic foot
(p) Two volumetric specific gravity flasks, 500 cc
(q) Other necessary hand tools required for sampling and testing
(r) Library containing contract specifications, latest ASTM volumes 4.01, 4.02, 4.03 and 4.09, AASHTO standard specification parts I and II, and Asphalt Institute Publication MS-2.

(s) Equipment for Theoretical Specific Gravity testing including a 4,000 cc pycnometer, vacuum pump capable of maintaining 30 ml mercury pressure and a balance, 16-20 kilograms with accuracy of 0.5 grams
(t) Extraction equipment, centrifuge and reflux types and ROTOflex equipment
(u) A masonry saw with diamond blade for trimming pavement cores and samples
(v) Telephone

Approval of the plant and testing laboratory by the Engineer requires all facilities and equipment to be in good working order during production, sampling and testing. Failure to provide the specified facilities shall be sufficient cause for disapproving bituminous plant operations.

The Owner shall have access to the lab and the plant whenever Contractor is in production.

(3) Inspection of Plant. The Engineer, or Engineer's authorized representative, shall have access, at all times, to all areas of the plant for checking adequacy of equipment; inspecting operation of the plant: verifying weights, proportions, and material properties; and checking the temperatures maintained in the preparation of the mixtures.

(4) Storage Bins and Surge Bins. Use of surge and storage bins for temporary storage of hot bituminous mixtures will be permitted as follows:

(a) The bituminous mixture may be stored in surge bins for ***a*** period of time not to exceed 3 hours.

(b) The bituminous mixture may be stored in insulated storage bins for a period of time not to exceed 24 hours**.**

The bins shall be such that mix drawn from them meets the same requirements as mix loaded directly into trucks.

If the Engineer determines that there is an excessive amount of heat loss, segregation**,** or oxidation of the mixture due to temporary storage, no temporary storage will be allowed.

401-4.3 HAULING EQUIPMENT. Trucks used for hauling bituminous mixtures shall have tight, clean, and smooth metal beds. To prevent the mixture from adhering to them, the truck beds shall be lightly coated with a minimum amount of paraffin oil, lime solution, or other approved material. Petroleum products shall not be used for coating truck beds. Each truck shall have a suitable cover to protect the mixture from adverse weather. When necessary, to ensure that the mixture will be delivered to the site at the specified temperature, truck beds shall be insulated or heated and covers shall be securely fastened.

401-4.4 BITUMINOUS PAVERS. Bituminous pavers shall be self-propelled with an activated heated screed, capable of spreading and finishing courses of bituminous plant mix material that will meet the specified thickness, smoothness, and grade. The paver shall have sufficient power to propel itself and the hauling equipment without adversely affecting the finished surface.

The paver shall have a receiving hopper of sufficient capacity to permit a uniform spreading operation. The hopper shall be equipped with a distribution system to place the mixture uniformly in front of the screed without segregation. The screed shall effectively produce a finished surface of the required evenness and texture without tearing, shoving, or gouging the mixture.

The paver shall be equipped with a control system capable of automatically maintaining the specified screed elevation. The control system shall be automatically actuated from either a reference line and/or through a system of mechanical sensors or sensor-directed mechanisms or devices that will maintain the paver screed at a predetermined transverse slope and at the proper elevation to obtain the required surface. The transverse slope controller shall be capable of maintaining the screed at the desired slope within plus or minus 0.1 percent.

The controls shall be capable of working in conjunction with any of the following attachments:

a. Ski-type device of not less than 30 feet (9.14 m) in length.

b. Taut stringline (wire) set to grade.

c. Short ski or shoe.

d. Laser control.

If, during construction, it is found that the spreading and finishing equipment in use leaves tracks or indented areas, or produces other blemishes in the pavement that are not satisfactorily corrected by the scheduled operations, the use of such equipment shall be discontinued and satisfactory equipment shall be provided by the Contractor.

401-4.5 ROLLERS. Rollers of the vibratory, steel wheel, and pneumatic-tired type shall be used. They shall be in good condition, capable of operating at slow speeds to avoid displacement of the bituminous mixture. The number, type, and weight of rollers shall be sufficient to compact the mixture to the required density while it is still in a workable condition.

All rollers shall be specifically designed and suitable for compacting hot mix bituminous concrete and shall be properly used. Rollers that impair the stability of any layer of a pavement structure or underlying soils shall not be used. Depressions in pavement surfaces caused by rollers shall be repaired by the Contractor at its own expense.

The use of equipment that causes crushing of the aggregate will not be permitted.

a. Nuclear Densometer. The Contractor shall have on site a nuclear densometer during all paving operations in order to assist in the determination of the optimum rolling pattern, type of roller and frequencies, as well as to monitor the effect of the rolling operations during production paving. The Contractor shall also supply a qualified technician during all paving operations to calibrate the nuclear densometer and obtain accurate density readings for all new bituminous concrete. These densities shall be supplied to the Engineer upon request at any time during construction. No separate payment will be made for supplying the density gauge and technician.

401-4.6 PREPARATION OF BITUMINOUS MATERIAL. The bituminous material shall be heated in a manner that will avoid local overheating and provide a continuous supply of the bituminous material to the mixer at a uniform temperature. The temperature of the bituminous material delivered to the mixer shall be sufficient to provide a suitable viscosity for adequate coating of the aggregate particles, but shall not exceed 325 degrees F (160 degrees C), unless otherwise required by the manufacturer.

401-4.7 PREPARATION OF MINERAL AGGREGATE. The aggregate for the mixture shall be heated and dried prior to introduction into the mixer. The maximum temperature and rate of heating shall be such that no damage occurs to the aggregates. The temperature of the aggregate and mineral filler shall not exceed 350 degrees F (175 degrees C) when the asphalt is added. Particular care shall be taken that aggregates high in calcium or magnesium content are not damaged by overheating. The temperature shall not be lower than is required to obtain complete coating and uniform distribution on the aggregate particles and to provide a mixture of satisfactory workability.

401-4.8 PREPARATION OF BITUMINOUS MIXTURE. The aggregates and the bituminous material shall be weighed or metered and introduced into the mixer in the amount specified by the job mix formula.

The combined materials shall be mixed until the aggregate obtains a uniform coating of bitumen and is thoroughly distributed throughout the mixture. Wet mixing time shall be the shortest time that will produce a satisfactory mixture, but not less than 25 seconds for batch plants. The wet mixing time for all plants shall be established by the Contractor, based on the procedure for determining the percentage of coated particles described in ASTM D 2489, for each individual plant and for each type of aggregate used. The wet mixing time will be set to achieve 95 percent of coated particles. For continuous mix plants, the minimum mixing time shall be determined by dividing the weight of its contents at operating level by the weight of the mixture delivered per second by the mixer. The moisture content of all bituminous mixtures upon discharge shall not exceed 0.5 percent.

* * * *

* * * *

* * * *

401-4.12 JOINTS. The formation of all joints shall be made in such a manner as to ensure a continuous bond between the courses and obtain the required density. All joints shall have the same texture as other sections of the course and meet the requirements for smoothness and grade.

The roller shall not pass over the unprotected end of the freshly laid mixture except when necessary to form a transverse joint. When necessary to form a transverse joint, it shall be made by means of placing a bulkhead or by tapering the course. The tapered edge shall be cut back to its full depth and width on a straight line to expose a vertical face prior to placing the adjacent lane. In both methods, all contact surfaces shall be given a tack coat of bituminous material before placing any fresh mixture against the joint.

Longitudinal joints which are irregular, damaged, uncompacted, or otherwise defective **[**or which have been left exposed for more than 4 hours, or whose surface temperature has cooled to less than 160° F**]** shall be cut back to expose a clean, sound surface for the full depth of the course. All contact surfaces shall be given a tack coat of bituminous material prior to placing any fresh mixture against the joint. The cost of this work and tack coat shall be considered incidental to the cost of the bituminous course.

* * * *

* * * *

(2) Joint Density. The lot size shall be the total length of longitudinal joints constructed by a lot of material as defined in paragraph 401-5.1a. The lot shall be divided into four equal sublots. One core of finished, compacted materials shall be taken by the Contractor from each sublot. Core locations will be determined by the Engineer on a random basis in accordance with procedures contained in ASTM D 3665. ALL CORING SHALL BE CENTERED ON THE JOINT. THE MINIMUM CORE DIAMETER FOR JOINT DENSITY DETERMINATION SHALL BE 5 INCHES.

(3) Sampling. Samples shall be neatly cut with a core drill. The cutting edge of the core drill bit shall be of hardened steel or other suitable material with diamond chips embedded in the metal cutting edge. The minimum diameter of the sample shall be five inches. Samples that are clearly defective, as a result of sampling, shall be discarded and another sample taken. The Contractor shall furnish all tools, labor, and materials for cutting samples and filling the cored pavement. Cored holes shall be filled in a manner acceptable to the Engineer and within one day after sampling.

(4) Testing. The bulk specific gravity of each cored sample will be measured by the Engineer in accordance with ASTM D 2726 or ASTM D 1188, whichever is applicable. The percent compaction (density) of each sample will be determined by dividing the bulk specific gravity of each sublot sample by the average bulk specific gravity of all laboratory prepared specimens for the lot, as determined in paragraph 401-5.1a(2). The bulk specific gravity used to determine the joint density at joints formed between different lots shall be the lowest of the bulk specific gravity values from the two different lots.

(5) Acceptance. Acceptance of field placed material for mat density will be determined by the Engineer in accordance with the requirements of paragraph 401-5.2b(1). Acceptance for joint density will be determined in accordance with the requirements of paragraph 401-5.2b(3).

c. Partial Lots — Plant-Produced Material. When operational conditions cause a lot to be terminated before the specified number of tests have been made for the lot, or when the Contractor and Engineer agree in writing to allow overages or other minor tonnage placements to be considered as partial lots, the following procedure will be used to adjust the lot size and the number of tests for the lot.

The last batch produced where production is halted will be sampled, and its properties shall be considered as representative of the particular sublot from which it was taken. In addition, an agreed to minor placement will be sampled, and its properties shall be considered as representative of the particular sublot from which it was taken. Where three sublots are produced, they shall constitute a lot. Where one or two sublots are produced, they shall be incorporated into the next lot, and the total number of sublots shall be used in the acceptance plan calculation, i.e., n = 5 or n = 6, for example. Partial lots at the end of asphalt production on the project shall be included with the previous lot.

d. Partial Lots — Field Placed Material. The lot size for field placed material shall correspond to that of the plant material, except that, in no cases, shall less than three (3) cored samples be obtained, i.e., n = 3.

401-5.2 ACCEPTANCE CRITERIA.

a. General. Acceptance will be based on the following characteristics of the bituminous mixture and completed pavement as well as the implementation of the Contractor Quality Control Program and test results:

(1) Stability
(2) Flow
(3) Air voids
(4) Mat density
(5) Joint density
(6) Thickness
(7) Smoothness
(8) Grade

Mat density and air voids will be evaluated for acceptance in accordance with paragraph 401-5.2b(1). Stability and flow will be evaluated for acceptance in accordance with paragraph 401-5.2b(2). Joint density will be evaluated for acceptance in accordance with paragraph 401-5.2b(3).

Thickness will be evaluated by the Engineer for compliance in accordance with paragraph 401-5.2b(4). Acceptance for smoothness will be based on the criteria contained in paragraph 401-5.2b(5). Acceptance for grade will be based on the criteria contained in paragraph 401-5.2b(6).

The Engineer may at any time, notwithstanding previous plant acceptance, reject and require the Contractor to dispose of any batch of bituminous mixture which is rendered unfit for use due to contamination, segregation, incomplete coating of aggregate, or improper mix temperature. Such rejection may be based on only visual inspection or temperature measurements. In the event of such rejection, the Contractor may take a representative sample of the rejected material in the presence of the Engineer, and if it can be demonstrated in the laboratory, in the presence of the Engineer, that such material was erroneously rejected, payment will be made for the material at the contract unit price.

b. Acceptance Criteria.

(1) Mat Density and Air Voids. Acceptance of each lot of plant produced material for mat density and air voids shall be based on the percentage of material within specification limits (PWL). If the PWL of the lot equals or exceeds 90 percent, the lot shall be acceptable. Acceptance and payment shall be determined in accordance with paragraph 401-8.1.

(2) Stability and Flow. Acceptance of each lot of plant produced material for stability and flow shall be based on the percentage of material within specification limits (PWL). If the PWL of the lot equals or exceeds 90 percent, the lot shall be acceptable. If the PWL is less than 90 percent, the Contractor shall determine the reason and take corrective action. If the PWL is below 80 percent, the Contractor must stop production and make adjustments to the mix. Lots with PWL below 80 percent for stability or flow values shall be removed and replaced at the expense of the Contractor.

(3) Joint Density. Acceptance of each lot of plant produced material for joint density shall be based on the percentage of material within specification limits (PWL). If the PWL of the lot is equal to or exceeds 90 percent, the lot shall be considered acceptable. If the PWL is less than 90 percent, the Contractor shall evaluate the reason and act accordingly. If the PWL is less than 80 percent, the Contractor shall cease operations and until the reason for poor compaction has been determined. IF THE PWL IS LESS THAN 71 PERCENT, THE PAY FACTOR FOR THE LOT USED TO COMPLETE THE JOINT SHALL BE REDUCED BY 5 PERCENTAGE POINTS. This lot pay factor reduction shall be incorporated and evaluated in accordance with paragraph 401-8.1.

(4) Thickness. Thickness of each lift of surface course shall be evaluated by the Engineer for compliance to the requirements shown on the plans. Measurements of thickness shall be made by the Engineer using the cores extracted for each sublot for density measurement. The maximum allowable deficiency at any point shall not be more than ¼ inch less than the thickness indicated for the lift. Average thickness of lift, or combined lifts, shall not be less than the indicated thickness. Where the thickness tolerances are not met, the lot or sublot shall be corrected by the Contractor at his expense by removing the deficient area and replacing with new pavement. The Contractor, at his expense, may take additional cores as approved by the Engineer to circumscribe the deficient area.

(5) Smoothness. The final surface shall be free from roller marks. The finished surfaces of each course of the pavement, except the finished surface of the final course, shall not vary more than ⅜ inch when evaluated with a 16 foot straightedge. The finished surface of the final course of pavement shall not vary more than ¼ inch when evaluated with a 16 foot straightedge. The lot size shall be [ ] square yards (square meters). Smoothness measurements shall be made at 50 foot intervals and as determined by the Engineer. In the longitudinal direction, a smoothness reading shall be made at the center of each paving lane. In the transverse direction, smoothness readings shall be made continuously across the full width of the pavement. However, transverse smoothness readings shall not be made across designed grade changes. At warped transition areas, straightedge position shall be adjusted to measure surface smoothness and not design grade transitions. When more than 15 percent of all measurements within a lot exceed the specified tolerance, the Contractor shall remove the deficient

area to the depth of the final course of pavement and replace with new material. Skin patching shall not be permitted. Isolated high points may be ground off providing the course thickness complies with the thickness specified on the plans. High point grinding will be limited to 15 square yards. Areas in excess of 15 square yards will require removal and replacement of the pavement in accordance with the limitations noted above.

* * * *

If there is a section of 250 feet or less, the profilogram for the section shall be included in the evaluation of the previous section. If there is an independently placed section of 50 to 250 feet in length, a profilogram shall be made for that section and the pay adjustment factors for short section of Table 7 shall apply.

All costs necessary to provide the profilograph and related to furnishing the appropriate profilograms as required in this provision are incidental to pavement construction and no direct compensation will be made therefore.

* * * *

TABLE 5. MARSHALL ACCEPTANCE LIMITS FOR STABILITY, FLOW, AIR VOIDS, DENSITY

TEST PROPERTY	**Pavements Designed for Aircraft Gross Weights of 60,000 Lbs. or More or Tire Pressures of 100 Psi or More**		**Pavements Designed for Aircraft Gross Weights Less Than 60,000 Lbs. or Tire Pressures Less Than 100 Psi**	
Number of Blows	**75**		**50**	
	Specification Tolerance Limits		**Specification Tolerance Limits**	
	L	**U**	**L**	**U**
Stability, minimum, pounds	1800	--	1000	--
Flow, 0.01-inch	8	16	8	20
Air Voids Total Mix, percent	2	5	2	5
Surface Course Mat Density, percent	96.3	--	96.3	--
Base Course Mat Density, percent	95.5	--	95.5	--
Joint density, percent	93.3	--	93.3	--

* * * *

* * * *

g. Placing and Finishing
h. Joints
i. Compaction
j. Surface Smoothness
k. Personnel
l. Laydown Plan

The Contractor shall perform quality control sampling, testing, and inspection during all phases of the work and shall perform them at a rate sufficient to ensure that the work conforms to the contract requirements, and at minimum test frequencies required by paragraph 401-6.3 and Section 100 of the General Provisions. As a part of the process for approving the Contractor's plan, the Engineer may require the Contractor's technician to perform testing of samples to demonstrate an acceptable level of performance.

No partial payment will be made for materials that are subject to specific quality control requirements without an approved plan.

401-6.2 TESTING LABORATORY. The Contractor shall provide a fully equipped asphalt laboratory meeting the requirements of paragraph 401-3.5 and 401-4.2a(2) located at the plant or job site. The Contractor shall provide the Engineer with certification stating that all of the testing equipment to be used is properly calibrated and will meet the specifications applicable for the specified test procedures.

401-6.3 QUALITY CONTROL TESTING. The Contractor shall perform all quality control tests necessary to control the production and construction processes applicable to these specifications and as set forth in the approved Quality Control Program. The testing program shall include, but not necessarily be limited to, tests for the control of asphalt content, aggregate gradation, temperatures, aggregate moisture, field compaction, and surface smoothness. A Quality Control Testing Plan shall be developed as part of the Quality Control Program.

a. Asphalt Content. A minimum of two extraction tests shall be performed per lot in accordance with ASTM D 6307 or ASTM D 2172 for determination of asphalt content. The weight of ash portion of the extraction test, as described in ASTM D 2172, shall be determined as part of the first extraction test performed at the beginning of plant production; and as part of every tenth extraction test performed thereafter, for the duration of plan production. The last weight of ash value obtained shall be used in the calculation of the asphalt content for the mixture. The asphalt content for the lot will be determined by averaging the test results.

The use of the nuclear method for determining asphalt content in accordance with ASTM D 4125 is permitted, provided that it is calibrated for the specific mix being used.

b. Gradation. Aggregate gradations shall be determined a minimum of twice per lot from mechanical analysis of extracted aggregate in accordance with ASTM D 5444 and ASTM C 136 (Dry Sieve). When asphalt content is determined by the nuclear method, aggregate gradation shall be determined from hot bin samples on batch plants, or from the cold feed on drum mix or continuous mix plants, and tested in accordance with ASTM C 136 (dry sieve) using actual batch weights to determine the combined aggregate gradation of the mixture.

c. Moisture Content of Aggregate. The moisture content of aggregate used for production shall be determined a minimum of once per lot in accordance with ASTM C 566.

d. Moisture Content of Mixture. The moisture content of the mixture shall be determined once per lot in accordance with ASTM D 1461 **[**or AASHTO T110**]**.

* * * *

e. Temperatures. Temperatures shall be checked, at least four times per lot, at necessary locations to determine the temperatures of the dryer, the bitumen in the storage tank, the mixture at the plant, and the mixture at the job site.

f. In-Place Density Monitoring. The Contractor shall conduct any necessary testing to ensure that the specified density is being achieved. A nuclear gauge may be used to monitor the pavement density in accordance with ASTM D 2950.

g. Additional Testing. Any additional testing that the Contractor deems necessary to control the process may be performed at the Contractor's option.

h. Monitoring. The Engineer reserves the right to monitor any or all of the above testing.

401-6.4 SAMPLING. When directed by the Engineer, the Contractor shall sample and test any material that appears inconsistent with similar material being sampled, unless such material is voluntarily removed and replaced or deficiencies corrected by the Contractor. All sampling shall be in accordance with standard procedures specified.

401-6.5 CONTROL CHARTS. The Contractor shall maintain linear control charts both for individual measurements and range (i.e., difference between highest and lowest measurements) for aggregate gradation and asphalt content.

Control charts shall be posted in a location satisfactory to the Engineer and shall be kept current. As a minimum, the control charts shall identify the project number, the contract item number, the test number, each test parameter, the Action and Suspension Limits applicable to each test parameter, and the Contractor's test results. The Contractor shall use the control charts as part of a process control system for identifying potential problems and assignable causes before they occur. If the Contractor's projected data during production indicates a problem and the Contractor is not taking satisfactory corrective action, the Engineer may suspend production or acceptance of the material.

a. Individual Measurements. Control charts for individual measurements shall be established to maintain process control within tolerance for aggregate gradation and asphalt content. The control charts shall use the job mix formula target values as indicators of central tendency for the following test parameters with associated Action and Suspension Limits:

CONTROL CHART LIMITS FOR INDIVIDUAL MEASUREMENTS

Sieve	Action Limit	Suspension Limit
¾ inch (19.0 mm)	0%	0%
½ inch (12.5 mm)	+/-6%	+/-9%
⅜ inch (9.5 mm)	+/-6%	+/-9%
No. 4 (4.75 mm)	+/-6%	+/-9%
No. 16 (1.18 mm)	+/-5%	+/-7.5%
No. 50 (0.30 mm)	+/-3%	+/-4.5%
No. 200 (0.075 mm)	+/-2%	+/-3%
Asphalt Content	+/-0.45%	+/-0.70%

b. Range. Control charts for range shall be established to control process variability for the test parameters and Suspension Limits listed below. The range shall be computed for each lot as the difference between the two test results for each control parameter. The Suspension Limits specified below are based on a sample size of n = 2. Should the Contractor elect to perform more than two tests per lot, the Suspension Limits shall be adjusted by multiplying the Suspension Limit by 1.18 for n = 3 and by 1.27 for n = 4.

CONTROL CHART LIMITS BASED ON RANGE
(Based on n = 2)

Sieve	Suspension Limit
½ inch (12.5 mm)	11 percent
⅜ inch (9.5 mm)	11 percent
No. 4 (4.75 mm)	11 percent
No. 16 (1.18 mm)	9 percent
No. 50 (0.30 mm)	6 percent
No. 200 (0.075 mm)	3.5 percent
Asphalt Content	0.8 percent

c. Corrective Action. The Contractor Quality Control Program shall indicate that appropriate action shall be taken when the process is believed to be out of tolerance. The Plan shall contain sets of rules to gauge when a process is out of control and detail what action will be taken to bring the process into control. As a minimum, a process shall be deemed out of control and production stopped and corrective action taken, if:

(1) One point falls outside the Suspension Limit line for individual measurements or range; or

(2) Two points in a row fall outside the Action Limit line for individual measurements.

* * * *

The total project payment for plant mix bituminous concrete pavement shall not exceed **[ ]** percent of the product of the contract unit price and the total number of tons (kg) of bituminous mixture used in the accepted work (See Note 2 under Table 6).

Payment for accepted saw-cut grooving shall be made at the contract unit price per square yard.

The price shall be compensation for furnishing all materials, for all preparation, mixing, and placing of these materials, and for all labor, equipment, tools, and incidentals necessary to complete the item.

* * * *

b. Profilograph Smoothness. When the final average profile index (subsequent to any required corrective action) does not exceed 7 inches per mile, payment will be made for that section at the contract unit price for the completed pavement. If the final average profile index (subsequent to any required corrective action) exceeds 7 inches per mile, but does not exceed 15 inches per mile, the Contractor may elect to accept a contract unit price adjustment in lieu of reducing the profile index.

c. Basis of Adjusted Payment for Smoothness. Price adjustment for pavement smoothness will be made in accordance with Table 7. The adjustment will apply to the total tonnage of asphalt concrete within a lot of pavement and shall be applied with the following equation:

(Tons of asphalt concrete in lot) x (lot pay factor) x (unit price per ton) x (smoothness pay factor) = payment for lot

TABLE 7. AVERAGE PROFILE INDEX SMOOTHNESS PAY FACTOR

(Inches per mile per 1/10 mile)	Short Sections	Pay Factor
00.0 - 7	00.0 - 15.0	100%
7.1 - 9	15.1 - 16	98%
9.1 - 11	16.1 - 17	96%
11.1 - 13	17.1 - 18	94%
13.1 - 14	18.1 - 20	92%
14.1 - 15	20.1 - 22	90%
15.1 & up	22.1& up	corrective work required[1]

1The Contractor shall correct pavement areas not meeting these tolerances by removing and replacing the defective work. If the Contractor elects to construct an overlay to correct deficiencies, the minimum thickness of the overlay shall not be less than twice the size of the maximum size aggregate. The corrective overlay shall not violate grade criteria and butt joints shall be constructed by sawing and removing the original pavement in compliance with the thickness/maximum aggregate size ratio. Skin patching shall not be permitted.

Unit bid price adjustment will apply to total bituminous mixture and asphalt cement quantities within the 1/10 mile segment of pavement. Deductions will be applied to recorded project quantities. Any pavement section less than 1/10 mile will be accepted on a pro-rated basis.

Material used in building the pavement above the specified grade shall not be included in the quantities for payment.

* * * *

TESTING REQUIREMENTS

ASTM C 29	Bulk Density ("Unit Weight") and Voids in Aggregate
ASTM C 88	Soundness of Aggregates by Use of Sodium Sulfate or Magnesium Sulfate
ASTM C 117	Materials Finer than 75µm (No.200) Sieve in Mineral Aggregates by Washing
ASTM C 127	Specific Gravity and Absorption of Coarse Aggregate
ASTM C 131	Resistance to Degradation of Small Size Coarse Aggregate by Abrasion and Impact in the Los Angeles Machine
ASTM C 136	Sieve Analysis of Fine and Coarse Aggregates
ASTM C 183	Sampling and the Amount of Testing of Hydraulic Cement
ASTM C 566	Total Evaporable Moisture Content of Aggregate by Drying
ASTM D 75	Sampling Aggregates
ASTM D 979	Sampling Bituminous Paving Mixtures
ASTM D 995	Mixing Plants for Hot-Mixed Hot-Laid Bituminous Paving Mixtures
ASTM D 1073	Fine Aggregate for Bituminous Paving Mixtures
ASTM D 1074	Compressive Strength of Bituminous Mixtures
ASTM D 1188	Bulk Specific Gravity and Density of Compacted Bituminous Mixtures Using Paraffin-Coated Specimens
ASTM D 1461	Moisture or Volatile Distillates in Bituminous Paving Mixtures
ASTM D 2041	Theoretical Maximum Specific Gravity and Density of Bituminous Paving Mixtures
ASTM D 2172	Quantitative Extraction of Bitumen from Bituminous Paving Mixtures
ASTM D 2419	Sand Equivalent Value of Soils and Fine Aggregate
ASTM D 2489	Estimating Degree of Particle Coating of Bituminous-Aggregate Mixtures
ASTM D 2726	Bulk Specific Gravity and Density of Non-Absorptive Compacted Bituminous Mixtures
ASTM D 2950	Density of Bituminous Concrete in Place by Nuclear Methods
ASTM D 3203	Percent Air Voids in Compacted Dense and Open Bituminous Paving Mixtures
ASTM D 3665	Random Sampling of Construction Materials
ASTM D 3666	Minimum Requirements for Agencies Testing and Inspecting Road and Paving Materials

ASTM D 4125	Asphalt Content of Bituminous Mixtures by the Nuclear Method
ASTM D 4318	Liquid Limit, Plastic Limit, and Plasticity Index of Soils
ASTM D 4791	Flat Particles**,** Elongated Particles**,** or Flat and Elongated Particles in Coarse Aggregate
ASTM D 4867	Effect of Moisture on Asphalt Concrete Paving Mixtures
ASTM D 5444	Mechanical Size Analysis of Extracted Aggregate
ASTM D 6926	Preparation of Bituminous Specimens Using MARSHALL Apparatus
ASTM D 6927	MARSHALL Stability and Flow of Bituminous Mixtures
ASTM E 11	Wire-Cloth Sieves for Testing Purposes
ASTM E 178	Dealing with Outlying Observations
ASTM E 1274	Measuring Pavement Roughness Using a Profilograph
AASHTO T 30	Mechanical Analysis of Extracted Aggregate
[AASHTO T 110	Moisture or Volatile Distillates in Bituminous Paving Mixtures**]**
The Asphalt Institute's Manual No. 2 (MS-2)	Mix Design Methods for Asphalt Concrete

MATERIAL REQUIREMENTS

ASTM D 242	Mineral Filler for Bituminous Paving Mixtures
ASTM D 946	Penetration Graded Asphalt Cement for Use in Pavement Construction
ASTM D 3381	Viscosity-Graded Asphalt Cement for Use in Pavement Construction
ASTM D 4552	Classifying Hot-Mix Recycling Agents
AASHTO M320	Performance Graded Asphalt Binder

END OF ITEM P-401

ITEM P-402 POROUS FRICTION COURSE

(Central Plant Hot Mix)

DESCRIPTION

402-1.1 This item shall consist of a plant mixed, open-graded porous friction course, composed of mineral aggregate and bituminous material, mixed in a central mixing plant, and placed on a prepared surface in accordance with these specifications and shall conform to the dimensions and typical cross section as shown on the plans.

* * * *

bitumen in an amount not less than 2 percent by weight (% by weight of synthetic rubber solids). The bitumen and additive shall be uniformly mixed to provide a mixture meeting the following requirements:

* * * *

Contractor's expense and shall remain in effect for the duration of the project. The job mix formula shall establish a single percentage of aggregate passing each required sieve size, a single percentage of bituminous material to be added to the aggregate, the amount of anti strip agent to be added (minimum of one half of one percent by weight), and a single temperature for the mixture as it is discharged into the hauling units. Silicone may be added to the mixture at a maximum rate of 1 ounce per 5,000 gallons of asphalt to facilitate laydown and rolling. Proper asphalt content shall be determined by mixing trial batches in the laboratory.

The job mix formula shall be submitted to the Engineer at least [30] days prior to the start of paving and shall include:

a. Percent passing each sieve size and gradation requirements.
b. Percent of asphalt cement.
c. Asphalt viscosity.
d. Mixing temperature range.
e. Temperature of mix when discharged from the mixer.
f. Temperature viscosity relationship of the asphalt cement.
g. Percent of wear (LA abrasion).
h. Plasticity Index and Liquid Limit of fine aggregate.
i. Percent fractured faces.
j. Percent elongated particles.
k. Anti-strip agent.

The Contractor shall submit samples to the Engineer, upon request, for job mix formula verification testing.

The combined aggregate shall be of such size that the percentage composition by weight, as determined by laboratory sieves, will conform to the gradation shown in Table 2 when tested in accordance with ASTM C 136.

The gradations in Table 2 represent the limits, which determine the suitability of the aggregate for use from the source of supply. The aggregate, as finally selected, shall have a gradation within the limits designated in Table 2 and shall not vary from the low limit on one sieve to the high limit on the adjacent sieve, or vice versa, but shall be uniformly graded from coarse to fine.

TABLE 2. AGGREGATE-POROUS FRICTION COURSE PERCENTAGE BY WEIGHT PASSING SIEVES

Sieve	3/4" maximum	1/2" maximum	Job-Mix (Production)
			Tolerances **
3/4"	100	---	---
1/2"	70-90	100	+/- 5%
3/8"	40-65	85-95	+/- 5%
#4	15-25	30-45	+/- 5%
#8	8-15	20-30	+/- 2%
#30	5-9	9-17	+/- 2%
#200	1-5	2-7	+/- 2%
Bitumen			+/- 0.2%
Temperature of Mix			+/- 20 degrees F.

** The gradation job mix tolerance limits will apply if they fall outside the master grading band in Table 2 except for the top two sieve sizes starting at the 100% passing band. These two sieve size bands shall also be additional limits for production.

The gradations shown are based on aggregates of uniform specific gravity. The percentages passing the various sieves will be subject to appropriate adjustments by the Engineer when aggregates of varying specific gravities are used. The adjustments to the job mix gradation curve should result in a curve of the same general shape as the median curve of the gradation band in Table 2 and fall within the gradation band.

The Asphalt Institutes Manual Series No. 2 (MS-2) contains a convenient procedure for "adjusting" the job mix gradation when aggregates of non uniform specific gravity are proposed for use.

The bituminous content of porous friction courses shall be expressed as a percentage of the total mix by weight and shall be approved by the Engineer on the basis of laboratory tests. The materials used in the mix design shall be the same as those used on the project.

The bituminous content shall be within plus or minus 1 percent of the value obtained from the formula:

$$2K_c + 4.0$$

where K_c is the surface area constant for that part of the total dry aggregate that will pass a 3/4" (19.0 mm) sieve and be retained on the No. 4 (4.75 mm) sieve. Procedures for determining K_c are contained in the Asphalt Institute's Manual Series No. 2 (MS-2). The bituminous content so estimated is the percentage by weight of the total dry aggregates and must be converted to the percent by weight of the total mix in the approved job-mix formula.

The laboratory used to develop the job mix formula shall meet the requirements of ASTM D 3666. A certification signed by the lab manager of the laboratory stating that it meets these requirements shall be submitted to the Engineer prior to the start of construction. The certification shall contain as a minimum:

a. Qualifications of personnel; laboratory manager, supervising technician, and testing technicians.
b. A listing of equipment to be used in developing the job mix.
c. A copy of the laboratory's quality control system.
d. Evidence of participation in the AASHTO Materials Reference Laboratory (AMRL) program.

402-3.3 TEST SECTION. At least one full day prior to full production, the Contractor shall prepare a quantity of bituminous mixture according to the approved job mix formula. The amount of mixture should be sufficient to construct a test section at least 50 feet long and 20 feet wide, placed in two sections and of the same depth specified on the plans. The test area will be designated by the Engineer. The underlying pavement on which the test section is to be constructed shall be the same as the remainder of the course represented by the test section. The equipment to be used in construction of the test section shall be the same type and weight to be used on the remainder of the course represented by the test section. No bituminous mixture shall be produced for payment prior to successful placement of and acceptance of a test strip by the Engineer.

If the test section should prove to be unsatisfactory, the necessary adjustments to plant operation, and/or placement procedures shall be made. Additional test sections, as required, shall be constructed and evaluated for conformance to the specifications. When the test section does not conform to specification requirements the test section shall be removed and replaced at the Contractors expense. Full production shall not begin without approval of the Engineer. Test sections, which conform to specification requirements, shall be measured and paid in accordance with Paragraphs 402-5.1 and 402-6.1. The asphalt content may be adjusted by the Engineer during the test section and will be used as the target asphalt content.

* * * *

CONSTRUCTION METHODS

402-4.1 WEATHER AND SEASONAL LIMITATIONS. The porous friction course shall be constructed only on a dry surface when the atmospheric temperature is 50 F (10 C) and rising (at calm wind conditions) and when the weather is not foggy or rainy.

402-4.2 BITUMINOUS MIXING PLANT. Plants used for the preparation of bituminous mixtures shall conform to the requirements of ASTM D 995 with the following changes:

a. Requirements for all Plants.

(1) Truck Scales. The bituminous mixture shall be weighed on approved scales furnished by the Contractor, or on public scales at the Contractor's expense. Such scales shall be inspected and sealed as often as the Engineer deems necessary to assure their accuracy. Scales shall conform to the requirements of Section 90.

(2) Testing Laboratory. The Contractor or producer shall provide laboratory facilities for control and acceptance testing functions during periods of mix production, sampling, and testing and whenever materials subject to the provisions of these specifications are being supplied or tested. The laboratory shall provide adequate equipment, space, and utilities as required for the performance of the specified tests.

(3) Inspection of Plant. The Engineer, or Engineer's authorized representative, shall have access, at all times, to all parts of the plant for checking adequacy of equipment; inspecting operation of the plant; verifying weights, proportions, and materials properties; and checking the temperatures maintained in the preparation of the mixtures.

(4) Storage Bins and Surge Bins. Paragraph 3.9 of ASTM D 995 is deleted.

402-4.3 HAULING EQUIPMENT. Trucks used for hauling bituminous mixtures shall have tight, clean, smooth metal beds. Petroleum products shall not be used for coating truck beds. To prevent the mixture from adhering to them, the beds shall be lightly coated with an approved asphalt release agent. The truck beds shall be raised to drain any excess solution before loading the mixture in the trucks. Each truck shall have a suitable cover to protect the mixture from adverse weather. If conditions warrant, truck beds shall be insulated and covers shall be securely fastened so that the mixture will be delivered to the site at the specified temperature.

402-4.4 BITUMINOUS PAVERS. Bituminous pavers shall be self-contained, power-propelled units with an activated screed or strike-off assembly, heated if necessary, and shall be capable of spreading and finishing courses of bituminous plant-mix material which will meet the specified thickness, smoothness, and grade.

The paver shall have a receiving hopper of sufficient capacity to permit a uniform spreading operation. The hopper shall be equipped with a distribution system to place the mixture uniformly in front of the screed. The screed or strike-off assembly shall effectively produce a finished surface of the required smoothness and texture without tearing, shoving, or gouging the mixture.

The paver shall be capable of operating at forward speeds consistent with satisfactory laying of the mixture.

Pavers shall be equipped with an automatic grade control system capable of maintaining the screed elevation as specified herein. The control system shall be automatically activated from either a reference line or surface through a system of mechanical sensors or sensor-directed mechanisms or devices that will maintain the paver screed at a predetermined transverse slope and at the proper elevation to obtain the required surface.

The controls shall be capable of working in conjunction with any of the following attachments:

a. Ski-Type device of not less than 30 feet in length or as directed by the Engineer.
b. Taut stringline (wire) set to grade.
c. Short ski or shoe.
d. Laser controls.

The controls shall be so arranged that independent longitudinal grade controls can be operated simultaneously on both sides of the machine or independently on either side. The electronic controls shall be arranged so that the machine can be controlled automatically, semi-automatically, or manually.

The automatic equipment shall be capable of controlling the grade to within plus or minus one-eighth inch and the transverse slope to within plus or minus one tenth of one percent from the controlling grade.

The machine shall be equipped with a spirit level or other type of slope indicator that will continuously indicate the average transverse slope of the screen. Curvature of spirit level tubes shall be as required to produce a bubble movement of not less than one-eighth inch for each one-tenth of one percent change in the transverse slope.

The paving machine shall be capable of being equipped with an infrared joint heater if directed by the Engineer. The output of infrared energy shall be in the one to six micron range. Converters shall be arranged end to end directly over the joint to be heated in sufficient numbers to continuously produce, when in operation, a minimum of 240,000 BTU per hour. The joint heater shall be positioned not more than one inch above the pavement to be heated and in front of the paver screed and shall be fully adjustable. Heaters will be required to be in operation at all times.

402-4.5 ROLLERS. Rollers shall be steel wheel. Split drum rollers are not acceptable. They shall be in good condition, capable of reversing without backlash, and operating at slow speeds to avoid displacement of the bituminous mixture. The wheels shall be equipped with adjustable scrapers and sprinkling apparatuses using a water soluble asphalt release agent, approved by the engineer, to prevent the bituminous mixture from sticking to the wheels. The number, type, and weight of rollers shall be sufficient to compact the mixture without detrimentally affecting the material.

402-4.6 PREPARATION OF MINERAL AGGREGATE. The aggregate for the mixture shall be dried and heated at the central mixing plant before entering the mixer. When introduced into the mixer, the combined aggregate moisture content (weighted according to the composition of the blend) shall be less than 0.25 percent for aggregate blends with water absorption of 2.5 percent or less and less than 0.50 percent for aggregate blends with water absorption greater than 2.5 percent. Water absorption of aggregates shall be determined by ASTM C 127 and C 128. The water absorption for the aggregate blend shall be the weighted average of the absorption values for the coarse aggregate retained on the No. 4 sieve (4.75 mm) and the fine aggregate passing the No. 4 sieve (4.75 mm). The water content test will be conducted in accordance with ASTM C 566. In no case shall the moisture content be such that foaming of the mixture occurs prior to placement. At the time of mixing, the temperature of the aggregate shall be within the range specified in the job mix formula. The maximum temperature and rate of heating shall be such that no damage occurs to the aggregates. Particular care shall be taken so that aggregates high in calcium or magnesium content are not damaged by overheating. The aggregate shall be screened to specified sizes and conveyed in separate bins ready for mixing with bituminous material.

402-4.7 PREPARATION OF BITUMINOUS MIXTURE. The bituminous mixture shall be prepared in a central mixing plant. The mixture shall be prepared at the temperature designated by the mix design.

The dry aggregate shall be combined in the plant using the proportionate amounts of each aggregate size required to meet the specified gradation. The quantity of aggregate for each batch shall be determined, measured, and conveyed into the mixer.

The quantity of bituminous material for each batch or the calibrated amount for continuous mixers shall be determined by the certified laboratory that prepared the mix design. It shall be measured by weight and introduced into the mixer within the temperature range specified in the job mix formula. For batch mixers, all aggregates shall be in the mixer before the bitumen material is added. In no case shall the temperature of the aggregate be more than 25°F above the temperature of the bituminous material. Mixing shall continue until all particles are coated uniformly. In no case shall the bituminous mixture be stored in storage silos or surge bins.

402-4.8 TRANSPORTATION AND DELIVERY OF THE MIXTURE. The mixture shall be placed at a temperature between 250°F and 300°F. Loads shall be sent from the plant so that all spreading and compacting of the mixture may be accomplished during daylight hours. Excessive waiting or delay of haul trucks at the job site

shall not be allowed and mix supplied at temperatures outside the specified range will not be accepted. Bleeding and rich spots resulting from segregation during transportation shall not be accepted.

402-4.9 SPREADING AND LAYING. Immediately before placing the porous friction course, the underlying course shall be cleared of all loose or deleterious material with power blowers, power brooms, or hand brooms as directed. A tack coat conforming to Item P-603 Bituminous Tack Coat shall be placed on all existing surfaces for bonding the PFC to the existing surface. Placement of the PFC must be delayed until the tack coat has properly cured.

The mixture shall be deposited from haul units directly into the laydown machine hopper and placed in a continuous operation.

Hauling over material already placed shall not be permitted until the material has been thoroughly compacted and allowed to cure for a period of at least 12 hours.

402-4.10 COMPACTION OF MIXTURE. After spreading, rolling shall be done immediately. Two or four passes, at the discretion of the Engineer, with a steel wheel roller weighing no more than 10 tons, shall be made for compaction. Care should be taken to avoid over rolling or rolling when material is too cool. To prevent adhesion of the mixture to the roller, the wheels shall be kept properly moistened using a water soluble asphalt release agent approved by the engineer. Rolling operations shall be conducted in such a manner that shoving or distortion will not develop. The amount of rolling shall be limited to only that necessary for compacting the porous friction course and bonding it to the underlying surface course. Any mixture, which becomes loose, broken, mixed with dirt, or in any way defective, shall be removed and replaced with fresh mixture and immediately compacted to conform to the surrounding area. Such rework shall be done at the Contractor's expense. Spreading of the mixture shall be done carefully with particular attention given to making the operation as continuous as possible. Hand working shall be kept to an absolute minimum.

Contractor quality control shall utilize a nuclear gauge to monitor compaction efforts.

402-4.11 JOINTS. The formation of all joints shall be made in such a manner as to ensure a continuous bond between old and new sections of the course. All joints shall present the same texture, density, and smoothness as other sections of the course.

The roller shall not pass over the unprotected end of the freshly laid mixture except when necessary to form a transverse joint. When necessary to form a transverse joint, it shall be made by means of placing a bulkhead or by tapering the course, in which case the edge shall be cut back to its full depth and width on a straight line to expose vertical face. In both methods all contact surfaces shall be given a tack coat of bituminous material before placing any fresh mixture against the joint.

Longitudinal joints which are irregular, damaged, or otherwise defective shall be cut back to expose a clean, sound surface for the full depth of the course. All contact surfaces shall be given a tack coat of bituminous material prior to placing any fresh mixture against the joint. The longitudinal joint shall offset that in the existing course by at least 1 foot (30 cm).

402-4.12 SHAPING EDGES. While the surface is being compacted and finished, the Contractor shall carefully shape the longitudinal outside edges of the PFC to a vertical face at the established edge. When transitioning from PFC to existing pavement, transverse edges shall be constructed with a finer graded bituminous mixture.

* * * *

not vary more than 1/4 inch. The 12-foot straight edge shall be applied parallel with and at right angles to the runway centerline in a pattern that includes longitudinal and transverse joints. The 12-foot straightedge shall be advanced approximately 1/2 its length in the line of measurement. Areas of the porous friction course exceeding the specified tolerances shall be removed, as directed by the Engineer, and replaced with new material at the Contractor's expense. The Engineer shall immediately notify the Contractor of such unsatisfactory visual defects such as non-uniform texture, roller marks, bleeding of bituminous material, cracking and shoving of the mixture during rolling operations. Areas of the porous friction course, which possess such defects, shall be removed, as directed by the Engineer, and replaced with new material at the Contractors expense. Skin patching or hand working shall not be permitted.

402-4.14 ACCEPTANCE SAMPLING AND TESTING OF BITUMINOUS MATERIAL AND AGGREGATE. The Engineer, at no cost to the Contractor, shall perform all acceptance sampling and testing. The testing laboratory performing the testing shall meet the requirements of ASTM D 3666.

Samples of the PFC mixture shall be taken at the point of discharge in hauling units and tested to control uniformity in bituminous content and gradation. Samples shall be taken in accordance with ASTM D 979 and prepared in accordance with ASTM D 2172 or ASTM D 6307. One sample shall be taken from each lot on a random basis in accordance with procedures contained in ASTM D 3665. A lot shall consist of 1,000 tons or 1/2 day's production, whichever is less. Should the average bituminous content for any two consecutive lots not fall within job mix tolerances under 402-3.1, the Contractor shall cease production until such out-of-tolerance conditions have been remedied. Any material, placed after the contractor has been informed of two consecutive failing tests, shall be rejected and removed at the Contractor's expense.

Aggregate from each hot bin or aggregate feed shall be sampled on a random basis and tested for gradation analysis in accordance with ASTM C 136. One sample shall be taken on a random basis in accordance with ASTM D 3665 for each lot. A lot shall consist of 500 tons or 1/4 day's production, whichever is less. If any two consecutive samples fail to meet the tolerances of the job mix formula gradation, the Contractor shall cease plant production until such out-of tolerance conditions have been remedied. Any material, placed after the contractor has been informed of two consecutive failing tests, shall be rejected and removed at the Contractor's expense.

The Engineer will notify the Contractor of unsatisfactory visual defects in the completed bituminous friction course such as non-uniform texture, roller marks, bleeding of bituminous material, cracking and shoving of the mixture during the roller operations, or nonconformance to the surface smoothness criteria specified. Unsatisfactory bituminous friction course shall be removed and replaced at the Contractor's expense as directed by the Engineer.

402-4.15 BITUMINOUS AND AGGREGATE MATERIAL (CONTRACTOR'S RESPONSIBILITY). Samples of the bituminous and aggregate materials that the Contractor proposes to use, together with a statement of their source and character, shall be submitted for approval prior to use. The Contractor shall require the manufacturer or producer of the bituminous and aggregate materials to furnish material subject to this and all other pertinent requirements of the contract. Only those materials that have been tested and approved for the intended use shall be acceptable.

The Contractor shall furnish the vendor's certified test reports for each carload or equivalent of bituminous material shipped to the project. The report shall be delivered to the Engineer before permission is granted to use the material. The vendor's certified test report for the bituminous material shall not be interpreted as a basis for final acceptance. All test reports shall be subject to verification by testing sample materials received for use on the project.

402-4.16 PROTECTION OF PAVEMENT. After final rolling, no vehicular traffic of any kind shall be permitted on the pavement until it has cured at least 12 hours or unless otherwise authorized by the Engineer. Newly constructed pavement areas shall not be opened to aircraft traffic until 24 hours after completion or unless otherwise authorized by the Engineer.

METHOD OF MEASUREMENT

402-5.1 Porous friction course shall be measured by the number of **[square yards (square meters)][tons (kg)]** of mixture used in the accepted work.

Only the areas of the porous friction course meeting the following thickness requirements shall be measured for payment:

To determine the thickness of the finished PFC, the Engineer shall take one core sample, not less than 2 inches (5 cm) in diameter, at random from each unit of the completed PFC area. A unit of the completed area shall be one paving lane wide by 1,000 feet (304 m) long. The last unit in any one paving lane shall include any remaining length in addition to the 1,000 feet (304 m).

When the measurement of any core is more than the maximum or less than the minimum allowable thickness, as shown in Table 3, additional cores shall be taken at 20-foot intervals (6 m) (parallel to and at right angles to the runway centerline) until the completed PFC is within such maximum or minimum thickness for the subunit being tested. Out-of-tolerance areas shall be deducted from the total **[square yards (square meters)][tons (kg)]** PFC for payment. If, in the Engineer's judgment, such out of tolerance areas warrant removal, the PFC shall be removed and the underlying course shall be cleaned (ready for reconstruction), all at the Contractor's expense.

TABLE 3. ALLOWABLE FINISHED PFC THICKNESS

	Nominal		Maximum		Minimum	
	in.	mm	in.	mm	in.	mm
3/4 in. aggregate	1.0	25	1.50	37	0.75	19
1/2 in. aggregate	0.75	19	1.25	32	0.50	12

BASIS OF PAYMENT

402-6.1 Payment shall be made at the respective contract prices per **[square yard (square meter)][ton (kg)]** for porous friction course and per **[gallon (liter)][ton (kg)]** for bituminous material. The prices shall be full compensation for furnishing all materials; for all preparation and storage of materials; for cleaning the existing surface; for mixing, hauling, placing, and compacting the mixture (including initial test section); and for all tools, equipment, and incidentals necessary to complete each item. No separate payment is included in the contract for furnishing and batching mineral filler, or anti-stripping agents, should such items be required.

Rehabilitation of the existing pavement surface and the tack coat shall be measured and paid for at their respective contract prices.

Payment will be made under:

Item P-402-6.1	Porous Friction Course—**[per square yard (square meter)][ton (kg)]**
Item P-402-6.2	Bituminous material—**[per gallon (liter)][ton (kg)]**

TESTING REQUIREMENTS

ASTM C 88	Soundness of Aggregates by Use of Sodium Sulfate or Magnesium Sulfate
ASTM C 127	Density, Specific Gravity, and Absorption of Coarse Aggregates
ASTM C 128	Density, Specific Gravity, and Absorption of Fine Aggregate
ASTM C 131	Resistance to Abrasion of Small Size Coarse Aggregate by Use of the Los Angeles Machine

ASTM C 136	Sieve Analysis of Fine and Coarse Aggregates
ASTM C 566	Total Evaporable Moisture Content of Aggregate by Drying
ASTM D 693	Crushed Aggregate for Macadam Pavements
ASTM D 979	Sampling Bituminous Paving Mixtures
ASTM D 995	Mixing Plants for Hot-Mixed Hot-Laid Bituminous Paving Mixtures
ASTM D 2172	Quantitative Extraction of Bitumen from Bituminous Paving Mixtures
ASTM D 2741	Susceptibility of Polyethylene Bottles to Soot Accumulation
ASTM D 3665	Random Sampling of Paving Materials
ASTM D 3666	Minimum Requirements for Agencies Testing and Inspecting Bituminous Paving Materials
ASTM D 4318	Liquid Limit, Plastic Limit, and Plasticity Index of Soils
ASTM D 6307	Standard Test Method for Asphalt Content of Hot Mix Asphalt by Ignition Method

MATERIAL REQUIREMENTS

ASTM D 242	Mineral Filler for Bituminous Paving Mixtures
ASTM D 3381	Viscosity-Graded Asphalt Cement for Use in Pavement Construction

END OF ITEM P-402

ITEM P-403 PLANT MIX BITUMINOUS PAVEMENTS (BASE, LEVELING OR SURFACE COURSE)

DESCRIPTION

403-1.1 This item shall consist of a **[ ]** course composed of mineral aggregate and bituminous material mixed in a central mixing plant and placed on a prepared course in accordance with these specifications and shall conform to the lines, grades, thicknesses, and typical cross sections shown on the plans. Each course shall be constructed to the depth, typical section, and elevation required by the plans and shall be rolled, finished, and approved before the placement of the next course.

* * * *

* * * *

The aggregate shall have sand equivalent values of **[ ]** or greater when tested in accordance with ASTM D 2419.

* * * *

PMA, has shown to perform very well in these areas. The low temperature grade should remain the same.

Additional grade bumping and grade selection information is given in Table A.

TABLE A. BINDER GRADE SELECTION AND GRADE BUMPING BASED ON GROSS AIRCRAFT WEIGHT.

Aircraft Gross Weight (pounds)	High Temperature Adjustment to Base Binder Grade	
	Pavement Type	
	Runway	Taxiway/Apron
Less than 12,500	--	--
Less than 60,000	--	1
Less than 100,000	--	1
Greater than 100,000	1	2

NOTES:
1. PG grades above a –22 on the low end (e.g. 64–16) are not recommended. Limited experience has shown this to be a poor performer.
2. PG grades below a 64 on the high end (e.g. 58-22) are not recommended. These binders often provide tender tendencies.
3. PG grades above a 76 on the high end (e.g. 82-22) are not recommended. These binders are very stiff and difficult to work and compact.

Grade Specification			
Penetration Grade ASTM D 946	Viscosity Grade ASTM D 3381		Performance Graded Asphalt Institute Superpave Series No. 1(SP-1)
40-50 60-70 85-100 100-120 120-150	AC-5 AC-10 AC-15 AC-20 AC-30 AC-40	AR-1000 AR-2000 AR-4000 AR-8000	In general, the Engineer should choose a PG-asphalt binder that has been approved for use in the vicinity by the State DOT, and is locally available. In general, a high reliability (98 percent) on both the high and low temperature categories is sufficiently conservative.

* * * *

(1) Liquid limit.
(2) Plasticity index.
(3) Sand equivalent.

c. Mineral Filler.

d. Bituminous Material. Test results for bituminous material shall include temperature/viscosity charts for mixing and compaction temperatures.

The certification(s) shall show the appropriate ASTM test(s) for each material, the test results, and a statement that the material meets the specification requirement.

The Engineer may request samples for testing, prior to and during production, to verify the quality of the materials and to ensure conformance with the applicable specifications.

403-2.5 ANTI-STRIPPING AGENT. Any anti-stripping agent or additive if required shall be heat stable, shall not change the asphalt cement viscosity beyond specifications, shall contain no harmful ingredients, shall be added in recommended proportion by approved method, and shall be a material approved by the Department of Transportation of the State in which the project is located.

COMPOSITION

403-3.1 COMPOSITION OF MIXTURE. The bituminous plant mix shall be composed of a mixture of well-graded aggregate, filler and anti-strip agent if required, and bituminous material. The several aggregate fractions shall be sized, handled in separate size groups, and combined in such proportions that the resulting mixture meets the grading requirements of the job mix formula (JMF).

403-3.2 JOB MIX FORMULA. No bituminous mixture for payment shall be produced until a job mix formula has been approved in writing by the Engineer. The bituminous mixture shall be designed using procedures contained in Chapter 5, MARSHALL METHOD OF MIX DESIGN, of the Asphalt Institute's Manual Series No. 2 (MS-2), Mix Design Methods for Asphalt Concrete, sixth edition, and shall meet the requirements of Tables 1, 2 and 3.

* * * *

a. Percent passing each sieve size for total combined gradation, individual gradation of all aggregate stockpiles and percent by weight of each stockpile used in the job mix formula.

b. Percent of asphalt cement.

c. Asphalt performance, viscosity or penetration grade.

d. Number of blows of hammer compaction per side of molded specimen.

e. Mixing temperature.

f. Compaction temperature.

g. Temperature of mix when discharged from the mixer.

h. Temperature-viscosity relationship of the asphalt cement.

i. Plot of the combined gradation on the Federal Highway Administration (FHWA) 45 power gradation curve.

j. Graphical plots of stability, flow, air voids, voids in the mineral aggregate, and unit weight versus asphalt content.

k. Percent natural sand.

l. Percent fractured faces.

m. Percent by weight of flat particles, elongated particles, and flat and elongated particles (and criteria).

n. Tensile Strength Ratio (TSR).

o. Antistrip agent (if required).

The Contractor shall submit to the Engineer the results of verification testing of three (3) asphalt samples prepared at the optimum asphalt content. The average of the results of this testing shall indicate conformance with the job mix formula requirements specified in Tables 1, 2 and 3.

When the project requires asphalt mixtures of differing aggregate gradations, a separate job mix formula and the results of job mix formula verification testing must be submitted for each mix.

The job mix formula for each mixture shall be in effect until a modification is approved in writing by the Engineer. Should a change in sources of materials be made, a new job mix formula must be submitted within [ ] days and approved by the Engineer in writing before the new material is used. After the initial production job mix formula(s) has/have been approved by the Engineer and a new or modified job mix formula is required for whatever reason, the subsequent cost of the Engineer's approval of the new or modified job mix formula will be borne by the Contractor. There will be no time extension given or considerations for extra costs associated with the stoppage of production paving or restart of production paving due to the time needed for the Engineer to approve the initial, new or modified job mix formula.

* * * *

Test Property	**Pavements Designed for Aircraft Gross Weights of 60,000 Lbs. or More or Tire Pressures of 100 Psi or More**	**Pavements Designed for Aircraft Gross Weights Less Than 60,000 Lbs. or Tire Pressures Less Than 100 Psi**
Number of Blows	**75**	**50**
Stability, pounds (newtons)	**1800 (8006)**	**1000 (4448)**
Flow, 0.01 in. (0.25 mm)	**8-16**	**8-20**
Air Voids (percent)	**2-5**	**2-5**
Percent Voids in Mineral Aggregate (minimum)	**See Table 2**	**See Table 2**

For mixes with maximum size aggregate greater than 1 inch up to a maximum of 1-½ inches, the Marshall Design Criteria shall be modified by the Engineer per the guidance found in Asphalt Institute Manual Series No. 2 (MS-2), Chapter 5 and the test method specified shall be ASTM D 5581 in lieu of ASTM D 6926.

* * * *

The mineral aggregate shall be of such size that the percentage composition by weight, as determined by laboratory sieves, will conform to the gradation or gradations specified in Table 3 when tested in accordance with ASTM C 136 and C 117.

The gradations in Table 3 represent the limits that shall determine the suitability of aggregate for use from the sources of supply. The aggregate, as selected (and used in the JMF), shall have a gradation within the limits designated in Table 3 and shall not vary from the low limit on one sieve to the high limit on the adjacent sieve, or vice versa, but shall be well graded from coarse to fine.

Deviations from the final approved mix design for bitumen content and gradation of aggregates shall be within the action limits for individual measurements as specified in paragraph 403-6.5a. The limits still will apply if they fall outside the master grading band in Table 3.

The maximum size aggregate used shall not be more than one-half of the thickness of the course being constructed except where otherwise shown on the plans or ordered by the Engineer.

TABLE 3. AGGREGATE - BITUMINOUS PAVEMENTS

Sieve Size	Percentage by Weight Passing Sieve
1-½ in. (37.50 mm)	*
1 in. (25.0 mm)	*
¾ in. (19.0 mm)	*
½ in. (12.5 mm)	*
⅜ in. (9.5 mm)	*
No. 4 (4.75 mm)	*
No. 8 (2.36 mm)	*
No. 16 (1.18 mm)	*
No. 30 (0.60 mm)	*
No. 50 (0.30 mm)	*
No. 100 (0.15 mm)	*
No. 200 (0.075 mm)	*
Asphalt percent	
Stone or gravel	*
Slag	*

The aggregate gradations shown are based on aggregates of uniform specific gravity. The percentages passing the various sieves shall be corrected when aggregates of varying specific gravities are used, as indicated in the Asphalt Institute Manual Series No. 2 (MS-2), Chapter 3.

* * * *

	1-½" max	1" max	¾ " max	½" max
1-½ in. (37.5 mm)	**100**	**--**	**--**	**--**
1 in. (24.0 mm)	**86-98**	**100**	**--**	**--**
¾ in. (19.0 mm)	**68-93**	**76-98**	**100**	**--**
½ in. (12.5 mm)	**57-81**	**66-86**	**79-99**	**100**
⅜ in. (9.5 mm)	**49-69**	**57-77**	**68-88**	**79-99**
No. 4 (4.75 mm)	**34-54**	**40-60**	**48-68**	**58-78**
No. 8 (2.36 mm)	**22-42**	**26-46**	**33-53**	**39-59**
No. 16 (1.18 mm)	**13-33**	**17-37**	**20-40**	**26-46**
No. 30 (0.600 mm)	**8-24**	**11-27**	**14-30**	**19-35**
No. 50 (0.300 mm)	**6-18**	**7-19**	**9-21**	**12-24**
No. 100 (0.150 mm)	**4-12**	**6-16**	**6-16**	**7-17**
No. 200 (0.075 mm)	**3-6**	**3-6**	**3-6**	**3-6**
Asphalt percent:				
Stone or gravel	**4.5-7.0**	**4.5-7.0**	**5.0-7.5**	**5.5-8.0**
Slag	**5.0-7.5**	**5.0-7.5**	**6.5-9.5**	**7.0-10.5**

* * * *

The blend of new asphalt cement and the RAP asphalt binder shall meet the requirements in paragraph 403-2.3. The virgin asphalt cement shall not be more than two standard asphalt material grades different than that specified in paragraph 403-2.3

* * * *

a. Qualifications of personnel; laboratory manager, supervising technician, and testing technicians.

b. A listing of equipment to be used in developing the job mix.

c. A copy of the laboratory's quality control system.

d. Evidence of participation in the AASHTO Materials Reference Laboratory (AMRL) program.

e. ASTM D 3666 certification of accreditation by a nationally recognized accreditation program.

CONSTRUCTION METHODS

403-4.1 WEATHER LIMITATIONS. The bituminous mixture shall not be placed upon a wet surface or when the surface temperature of the underlying course is less than specified in Table 4. The temperature requirements may be waived by the Engineer, if requested; however, all other requirements including compaction shall be met.

TABLE 4. BASE TEMPERATURE LIMITATIONS

Mat Thickness	Base Temperature (Minimum)	
	Deg. F	Deg. C
3 in. (7.5 cm) or greater	40	4
Greater than 1 in. (2.5 cm) but less than 3 in. (7.5 cm)	45	7
1 in. (2.5 cm) or less	50	10

403-4.2 BITUMINOUS MIXING PLANT. Plants used for the preparation of bituminous mixtures shall conform to the requirements of ASTM D 995 with the following changes:

a. Requirements for All Plants.

(1) Truck Scales. The bituminous mixture shall be weighed on approved scales furnished by the Contractor, or on certified public scales at the Contractor's expense. Scales shall be inspected and sealed as often as the Engineer deems necessary to assure their accuracy. Scales shall conform to the requirements of the General Provisions, Section 90-01.

In lieu of scales, and as approved by the Engineer, asphalt mixture weights may be determined by the use of an electronic weighing system equipped with an automatic printer that weighs the total paving mixture. Contractor must furnish calibration certification of the weighing system prior to mix production and as often thereafter as requested by the Engineer.

(2) Testing Facilities. The Contractor shall provide laboratory facilities at the plant for the use of the Engineer's acceptance testing and the Contractor's quality control testing. The Engineer will always have priority in the use of the laboratory. The lab shall have sufficient space and equipment so that both testing representatives (Engineer’s and Contractor’s) can operate efficiently. The lab shall also meet the requirements of ASTM D 3666.

The plant testing laboratory shall have a floor space area of not less than 150 square feet, with a ceiling height of not less than 7-½ feet. The laboratory shall be weather tight, sufficiently heated in cold weather, air-conditioned in hot weather to maintain temperatures for testing purposes of 70 degrees F +/- 5 degrees F. The plant testing laboratory shall be located on the plant site to provide an unobstructed view, from one of its windows, of the trucks being loaded with the plant mix materials.

Laboratory facilities shall be kept clean, and all equipment shall be maintained in proper working condition. The Engineer shall be permitted unrestricted access to inspect the Contractor’s laboratory facility and witness quality

control activities. The Engineer will advise the Contractor in writing of any noted deficiencies concerning the laboratory facility, equipment, supplies, or testing personnel and procedures. When the deficiencies are serious enough to be adversely affecting the test results, the incorporation of the materials into the work shall be suspended immediately and will not be permitted to resume until the deficiencies are satisfactorily corrected.

As a minimum, the plant testing laboratory shall have:

(a) Adequate artificial lighting

(b) Electrical outlets sufficient in number and capacity for operating the required testing equipment and drying samples.

(c) Fire extinguishers (2), Underwriter's Laboratories approved

(d) Work benches for testing, minimum 2-½ feet by 10 feet.

(e) Desk with 2 chairs

(f) Sanitary facilities convenient to testing laboratory

(g) Exhaust fan to outside air, minimum 12 inch blade diameter

(h) A direct telephone line and telephone including a FAX machine operating 24 hours per day, seven days per week

(i) File cabinet with lock for Engineer

(j) Sink with running water, attached drain board and drain capable of handling separate material

(k) Metal stand for holding washing sieves

(l) Two element hot plate or other comparable heating device, with dial type thermostatic controls for drying aggregates

(m) Mechanical shaker and appropriate sieves (listed in JMF, Table 3) meeting the requirements of ASTM E-11 for determining the gradation of coarse and fine aggregates in accordance with ASTM C 136

(n) Marshall testing equipment meeting ASTM D 6926, ASTM D 6927, or ASTM D 5581 as necessary, automatic compaction equipment capable of compacting three specimens at once and other apparatus as specified in ASTM C 127, D 2172, D 2726, and D 2041

(o) Oven, thermostatically controlled, inside minimum 1 cubic foot

(p) Two volumetric specific gravity flasks, 500 CC

(q) Other necessary hand tools required for sampling and testing

(r) Library containing contract specifications, latest ASTM volumes 4.01, 4.02,4.03 and 4.09, AASHTO standard specification parts I and II, and Asphalt Institute Publication MS-2.

(s) Equipment for Theoretical Specific Gravity testing including a 4,000 cc pycnometer, vacuum pump capable of maintaining 30 ml mercury pressure and a balance, 16-20 kilograms with accuracy of 0.5 grams

(t) Extraction equipment, centrifuge and reflux types and ROTOflex equipment

(u) A masonry saw with diamond blade for trimming pavement cores and samples

(v) Telephone

Approval of the plant and testing laboratory by the Engineer requires all facilities and equipment to be in good working order during production, sampling and testing. Failure to provide the specified facilities shall be sufficient cause for disapproving bituminous plant operations.

The Owner shall have access to the lab and at the plant whenever Contractor is producing asphalt for the project.

(3) Inspection of Plant. The Engineer, or Engineer's authorized representative, shall have access, at all times, to all areas of the plant for checking adequacy of equipment; inspecting operation of the plant: verifying weights, proportions, and material properties; and checking the temperatures maintained in the preparation of the mixtures.

(4) Storage Bins and Surge Bins. Use of surge bins or storage bins for temporary storage of hot bituminous mixtures will be permitted as follows:

(a) The bituminous mixture may be stored in surge bins for a period of time not to exceed 3 hours.

(b) The bituminous mixture may be stored in insulated storage bins for a period of time not to exceed 24 hours**.**

The bins shall be such that mix drawn from them meets the same requirements as mix loaded directly into trucks.

If the Engineer determines that there is an excessive amount of heat loss, segregation or oxidation of the mixture due to temporary storage, no temporary storage will be allowed.

403-4.3 HAULING EQUIPMENT. Trucks used for hauling bituminous mixtures shall have tight, clean, and smooth metal beds. To prevent the mixture from adhering to them, the truck beds shall be lightly coated with a minimum amount of an approved asphalt release agent. Petroleum products shall not be used for coating truck beds. Each truck shall have a suitable cover to protect the mixture from adverse weather. When necessary, to ensure that the mixture will be delivered to the site at the specified temperature, truck beds shall be insulated or heated and covers shall be securely fastened.

403-4.4 BITUMINOUS PAVERS. Bituminous pavers shall be self-propelled with an activated heated screed, capable of spreading and finishing courses of bituminous plant mix material that will meet the specified thickness, smoothness, and grade. The paver shall have sufficient power to propel itself and the hauling equipment without adversely affecting the finished surface.

The paver shall have a receiving hopper of sufficient capacity to permit a uniform spreading operation. The hopper shall be equipped with a distribution system to place the mixture uniformly in front of the screed without segregation. The screed shall effectively produce a finished surface of the required evenness and texture without tearing, shoving, or gouging the mixture.

The paver shall be equipped with a control system capable of automatically maintaining the specified screed elevation. The control system shall be automatically actuated from either a reference line and/or through a system of mechanical sensors or sensor-directed mechanisms or devices that will maintain the paver screed at a predetermined transverse slope and at the proper elevation to obtain the required surface. The transverse slope controller shall be capable of maintaining the screed at the desired slope within plus or minus 0.1 percent.

The controls shall be capable of working in conjunction with any of the following attachments:

a. Ski-type device of not less than 30 feet (9.14 m) in length.

b. Taut stringline (wire) set to grade.

c. Short ski or shoe.

d. Laser control.

If, during construction, it is found that the spreading and finishing equipment in use leaves tracks or indented areas, or produces other blemishes in the pavement and/or base course that are not satisfactorily corrected by the scheduled operations, the use of such equipment shall be discontinued and satisfactory equipment shall be provided by the Contractor.

403-4.5 ROLLERS. Rollers of the vibratory, steel wheel, and pneumatic-tired type shall be used. They shall be in good condition, capable of operating at slow speeds to avoid displacement of the bituminous mixture. The number, type, and weight of rollers shall be sufficient to compact the mixture to the required density while it is still in a workable condition.

All rollers shall be specifically designed and suitable for compacting hot mix bituminous concrete and shall be properly used. Rollers that impair the stability of any layer of a pavement structure or underlying soils shall not be used. Depressions in pavement surfaces caused by rollers shall be repaired by the Contractor at its own expense.

The use of equipment that causes crushing of the aggregate will not be permitted.

a. Nuclear Densometer. The Contractor shall have on site a nuclear densometer during all paving operations in order to assist in the determination of the optimum rolling pattern, type of roller and frequencies, as well as to monitor the effect of the rolling operations during production paving. The Contractor shall also supply a qualified technician during all paving operations to calibrate the nuclear densometer and obtain accurate density readings for all new bituminous concrete. These densities shall be supplied to the Engineer upon request at any time during construction. No separate payment will be made for supplying the density gauge and technician.

403-4.6 PREPARATION OF BITUMINOUS MATERIAL. The bituminous material shall be heated in a manner that will avoid local overheating and provide a continuous supply of the bituminous material to the mixer at a uniform temperature. The temperature of the bituminous material delivered to the mixer shall be sufficient to provide a suitable viscosity for adequate coating of the aggregate particles, but shall not exceed 325 degrees F (160 degrees C), unless otherwise required by the manufacturer.

403-4.7 PREPARATION OF MINERAL AGGREGATE. The aggregate for the mixture shall be heated and dried prior to introduction into the mixer. The maximum temperature and rate of heating shall be such that no damage occurs to the aggregates. The temperature of the aggregate and mineral filler shall not exceed 350 degrees F (175 degrees C) when the asphalt is added. Particular care shall be taken that aggregates high in calcium or magnesium content are not damaged by overheating. The temperature shall not be lower than is required to obtain complete coating and uniform distribution on the aggregate particles and to provide a mixture of satisfactory workability.

403-4.8 PREPARATION OF BITUMINOUS MIXTURE. The aggregates and the bituminous material shall be weighed or metered and introduced into the mixer in the amount specified by the job mix formula.

The combined materials shall be mixed until the aggregate obtains a uniform coating of bitumen and is thoroughly distributed throughout the mixture. Wet mixing time shall be the shortest time that will produce a satisfactory mixture, but not less than 25 seconds for batch plants. The wet mixing time for all plants shall be established by the Contractor, based on the procedure for determining the percentage of coated particles described in ASTM D 2489, for each individual plant and for each type of aggregate used. The wet mixing time will be set to achieve 95 percent of coated particles. For continuous mix plants, the minimum mixing time shall be determined by dividing the weight of its contents at operating level by the weight of the mixture delivered per second by the mixer. The moisture content of all bituminous mixtures upon discharge shall not exceed 0.5 percent.

* * * *

403-4.10 LAYDOWN PLAN, TRANSPORTING, PLACING, AND FINISHING. Prior to the placement of the bituminous mixture, the Contractor shall prepare a laydown plan for approval by the Engineer. This is to minimize the number of cold joints in the pavement. The laydown plan shall include the sequence of paving laydown by stations, width of lanes, temporary ramp location(s), and laydown temperature. The laydown plan shall also include estimated time of completion for each portion of the work (i.e. milling, paving, rolling, cooling, etc.). Modifications to the laydown plan shall be approved by the Engineer.

The bituminous mixture shall be transported from the mixing plant to the site in vehicles conforming to the requirements of paragraph 403-4.3. Deliveries shall be scheduled so that placing and compacting of mixture is uniform with minimum stopping and starting of the paver. Hauling over freshly placed material shall not be permitted until the material has been compacted, as specified, and allowed to cool to atmospheric temperature.

[The Contractor may elect to use a material transfer vehicle to deliver mix to the paver.**]**

* * * *

Engineer. If the Contractor has to continue placing non-payment bituminous concrete, as directed by the Engineer, to make the surfaces safe for aircraft operations, the Contractor shall do so to the satisfaction of the Engineer. It is the Contractor's responsibility to leave the facilities to be paved in a safe condition ready for aircraft operations. No consideration for extended closure time of the area being paved will be given. As a first order of work for the next paving shift, the Contractor shall remove all out of specification material and replace with approved material to the satisfaction of the Engineer. When the above situations occur, there will be no consideration given for additional construction time or payment for extra costs."

* * * *

In areas not accessible to the roller, the mixture shall be thoroughly compacted with approved power driven tampers. Tampers shall weigh not less than 275 pounds, have a tamping plate width not less than 15 inches, be rated at not less than 4,200 vibrations per minute, and be suitably equipped with a standard tamping plate wetting device.

Any mixture that becomes loose and broken, mixed with dirt, contains check-cracking, or in any way defective shall be removed and replaced with fresh hot mixture and immediately compacted to conform to the surrounding area. This work shall be done at the Contractor's expense. Skin patching shall not be allowed.

403-4.12 JOINTS. The formation of all joints shall be made in such a manner as to ensure a continuous bond between the courses and obtain the required density. All joints shall have the same texture as other sections of the course and meet the requirements for smoothness and grade.

The roller shall not pass over the unprotected end of the freshly laid mixture except when necessary to form a transverse joint. When necessary to form a transverse joint, it shall be made by means of placing a bulkhead or by tapering the course. The tapered edge shall be cut back to its full depth and width on a straight line to expose a vertical face prior to placing the adjacent lane. In both methods, all contact surfaces shall be given a tack coat of bituminous material before placing any fresh mixture against the joint.

Longitudinal joints which are irregular, damaged, uncompacted, or otherwise defective **[**or which have been left exposed for more than 4 hours, or whose surface temperature has cooled to less than 160^0 F**]** shall be cut back to expose a clean, sound surface for the full depth of the course. All contact surfaces shall be given a tack coat of bituminous material prior to placing any fresh mixture against the joint. The cost of this work and tack coat shall be considered incidental to the cost of the bituminous course.

* * * *

(2) Joint Density. The lot shall be divided into four equal sublots. One core of finished, compacted materials shall be taken by the Contractor from each sublot. Core locations will be determined by the Engineer on a random basis in accordance with procedures contained in ASTM D 3665. Edge of cores will be taken within 6 inches of the joint of the same lot material but not directly on the joint.

(3) Sampling. Samples shall be neatly cut with a core drill. The cutting edge of the core drill bit shall be of hardened steel or other suitable material with diamond chips embedded in the metal cutting edge. The minimum diameter of the sample shall be five inches. Samples that are clearly defective, as a result of sampling, shall be discarded and another sample taken. The Contractor shall furnish all tools, labor, and materials for cutting samples and filling the cored pavement. Cored holes shall be filled in a manner acceptable to the Engineer and within one day after sampling.

(4) Testing. The bulk specific gravity of each cored sample will be measured by the Engineer in accordance with ASTM D 2726 or ASTM D 1188, whichever is applicable. The percent compaction (density) of each sample will be determined by dividing the bulk specific gravity of each sublot sample by the average bulk specific gravity of all laboratory prepared specimens for the lot, as determined as follows:

(a) Sufficient material for preparation of test specimens for all testing will be sampled by the Engineer on a random basis, in accordance with the procedures contained in ASTM D 3665. One set of laboratory compacted specimens will be prepared for each sublot in accordance with ASTM D 6926, at the number of blows required by paragraph 403-3.2, Table 1. Each set of laboratory compacted specimens will consist of three test portions prepared from the same sample increment. The sample of bituminous mixture may be put in a covered metal tin and placed in an oven for not less than 30 minutes or more than 60 minutes to stabilize to compaction temperature. The compaction temperature of the specimens shall be as specified in the job mix formula.

(b) The bulk specific gravity of each test specimen shall be measured by the Engineer in accordance with ASTM D 2726 using the procedure for laboratory-prepared thoroughly dry specimens, or ASTM D 1188, whichever is applicable, for use in computing pavement density.

(c) The bulk specific gravity used to determine the joint density at joints formed between different lots shall be the lowest of the bulk specific gravity values from the two different lots.

(5) Acceptance. Acceptance of field placed material for mat and joint density will be determined by the Engineer in accordance with the requirements of paragraph 403-5.2b.

d. Partial Lots — Field Placed Material. When operational conditions cause a lot to be terminated before the specified number of tests have been made for the lot, or when the Contractor and Engineer agree in writing to allow overages or other minor tonnage placements to be considered as partial lots, the following procedure will be used to adjust the lot size and the number of tests for the lot.

The last batch produced where production is halted will be sampled, and its properties shall be considered as representative of the particular sublot from which it was taken. In addition, an agreed to minor placement will be sampled, and its properties shall be considered as representative of the particular sublot from which it was taken. Where three sublots are produced, they shall constitute a lot. Where one or two sublots are produced, they shall be incorporated into the next lot, and the total number of sublots shall be used in the acceptance plan calculation, i.e., n = 5 or n = 6, for example. Partial lots at the end of asphalt production on the project shall be included with the previous lot.

403-5.2 ACCEPTANCE CRITERIA.

a. General. Acceptance will be based on the following characteristics of the bituminous mixture and completed pavement and test results:

(1) Mat density
(2) Joint density

(3) Thickness
(4) Smoothness
(5) Grade

Mat density will be evaluated for acceptance in accordance with paragraph 403-5.2b(1). Joint density will be evaluated for acceptance in accordance with paragraph 403-5.2b(2).

Thickness will be evaluated by the Engineer for compliance in accordance with paragraph 403-5.2b(3). Acceptance for smoothness will be based on the criteria contained in paragraph 403-5.2b(4). Acceptance for grade will be based on the criteria contained in paragraph 403-5.2b(5).

The Engineer may at any time, notwithstanding previous plant acceptance, reject and require the Contractor to dispose of any batch of bituminous mixture which is rendered unfit for use due to contamination, segregation, incomplete coating of aggregate, or improper mix temperature. Such rejection may be based on only visual inspection or temperature measurements. In the event of such rejection, the Contractor may take a representative sample of the rejected material in the presence of the Engineer, and if it can be demonstrated in the laboratory, in the presence of the Engineer, that such material was erroneously rejected, payment will be made for the material at the contract unit price.

b. Acceptance Criteria.

(1) Mat Density. Acceptance of each lot of plant produced material for mat density shall be based on the average of all of the densities taken from the sublots. If the average mat density of the lot so established equals or exceeds 96 percent, the lot shall be acceptable. If the average mat density of the lot is below 96 percent, the lot shall be removed and replaced at the Contractor's expense.

(2) Joint Density. Acceptance of each lot of plant produced material for joint density shall be based on the average of all of the joint densities taken from the sublots. If the average joint density of the lot so established equals or exceeds 94 percent, the lot shall be acceptable. If the average joint density of the lot is less than 94 percent, the Contractor shall stop production and evaluate the method of compacting joints. Production may resume once the reason for poor compaction has been determined and appropriate measures have been taken to ensure proper compaction.

(3) Thickness. Thickness of each course shall be evaluated by the Engineer for compliance to the requirements shown on the plans. Measurements of thickness shall be made by the Engineer using the cores extracted for each sublot for density measurement. The maximum allowable deficiency at any point shall not be more than ¼ inch less than the thickness indicated for the lift. Average thickness of lift, or combined lifts, shall not be less than the indicated thickness. Where thickness deficiency exceeds the specified tolerances, the lot or sublot shall be corrected by the Contractor at his expense by removing the deficient area and replacing with new pavement. The Contractor, at his expense, may take additional cores as approved by the Engineer to circumscribe the deficient area.

(4) Smoothness. The final surface shall be free from roller marks. The finished surfaces of each course of the pavement, except the finished surface of the final surface course, shall not vary more than ⅜ inch when evaluated with a 16 foot straightedge. The finished surface of the final surface course shall not vary more than ¼ inch when evaluated with a 16 foot straightedge. The lot size shall be [ ] square yards (square meters). Smoothness measurements shall be made at 50 foot intervals and as determined by the Engineer. In the longitudinal direction, a smoothness reading shall be made at the center of each paving lane. In the transverse direction, smoothness readings shall be made continuously across the full width of the pavement. However, transverse smoothness readings shall not be made across designed grade changes. At warped transition areas, straightedge position shall be adjusted to measure surface smoothness and not design grade transitions. When more than 15 percent of all measurements within a lot exceed the specified tolerance, the Contractor shall remove the deficient area to the depth of the course of pavement and replace with new material. Skin patching shall not be permitted. Isolated high points may be ground off providing the course thickness complies with the thickness specified on the plans. High point grinding will be limited to 15 square yards. Areas in excess of 15 square yards will require removal and replacement of the course in accordance with the limitations noted above.

* * * *

* * * *

* * * *

b. Range. Control charts for range shall be established to control process variability for the test parameters and Suspension Limits listed below. The range shall be computed for each lot as the difference between the two test results for each control parameter. The Suspension Limits specified below are based on a sample size of n = 2. Should the Contractor elect to perform more than two tests per lot, the Suspension Limits shall be adjusted by multiplying the Suspension Limit by 1.18 for n = 3 and by 1.27 for n = 4.

CONTROL CHART LIMITS BASED ON RANGE (Based on n = 2)	
Sieve	Suspension Limit
½ inch (12.5 mm)	11 percent
⅜ inch (9.5 mm)	11 percent
No. 4 (4.75 mm)	11 percent
No. 16 (1.18 mm)	9 percent
No. 50 (0.30 mm)	6 percent
No. 200 (0.075 mm)	3.5 percent
Asphalt Content	0.8 percent

c. Corrective Action. The Contractor Quality Control Program shall indicate that appropriate action shall be taken when the process is believed to be out of tolerance. The Plan shall contain sets of rules to gauge when a process is out of control and detail what action will be taken to bring the process into control. As a minimum, a process shall be deemed out of control and production stopped and corrective action taken, if:

(1) One point falls outside the Suspension Limit line for individual measurements or range; or

(2) Two points in a row fall outside the Action Limit line for individual measurements.

* * * *

BASIS OF PAYMENT

403-8.1 PAYMENT. Payment for an accepted lot of bituminous concrete pavement shall be made at the contract unit price per ton (kg) for bituminous mixture**.** The price shall be compensation for furnishing all materials, for all preparation, mixing, and placing of these materials, and for all labor, equipment, tools, and incidentals necessary to complete the item.

Payment will be made under:

Item P-403-8.1a	Bituminous **[ ] [**Surface**] [**Base**] [**Binder**] [**Leveling**]** Course —per ton (kg)

TESTING REQUIREMENTS

ASTM C 29	Bulk Density (“Unit Weight”) and Voids in Aggregate
ASTM C 88	Soundness of Aggregates by Use of Sodium Sulfate or Magnesium Sulfate
ASTM C 117	Materials Finer than 75µm (No.200) Sieve in Mineral Aggregates by Washing
ASTM C 127	Specific Gravity and Absorption of Coarse Aggregate
ASTM C 131	Resistance to Degradation of Small Size Coarse Aggregate by Abrasion and Impact in the Los Angeles Machine
ASTM C 136	Sieve Analysis of Fine and Coarse Aggregates
ASTM C 183	Sampling and the Amount of Testing of Hydraulic Cement
ASTM C 566	Total Evaporable Moisture Content of Aggregate by Drying
ASTM D 75	Sampling Aggregates
ASTM D 979	Sampling Bituminous Paving Mixtures
ASTM D 995	Mixing Plants for Hot-Mixed Hot-Laid Bituminous Paving Mixtures
ASTM D 1073	Fine Aggregate for Bituminous Paving Mixtures
ASTM D 1074	Compressive Strength of Bituminous Mixtures
ASTM D 1188	Bulk Specific Gravity and Density of Compacted Bituminous Mixtures Using Paraffin-Coated Specimens
ASTM D 1461	Moisture or Volatile Distillates in Bituminous Paving Mixtures
ASTM D 2041	Theoretical Maximum Specific Gravity and Density of Bituminous Paving Mixtures
ASTM D 2172	Quantitative Extraction of Bitumen from Bituminous Paving Mixtures
ASTM D 2419	Sand Equivalent Value of Soils and Fine Aggregate
ASTM D 2489	Estimating Degree of Particle Coating of Bituminous-Aggregate Mixtures

ASTM D 2726	Bulk Specific Gravity and Density of Non-Absorptive Compacted Bituminous Mixtures
ASTM D 2950	Density of Bituminous Concrete in Place by Nuclear Methods
ASTM D 3203	Percent Air Voids in Compacted Dense and Open Bituminous Paving Mixtures
ASTM D 3665	Random Sampling of Construction Materials
ASTM D 3666	Minimum Requirements for Agencies Testing and Inspecting Road and Paving Materials
ASTM D 4125	Asphalt Content of Bituminous Mixtures by the Nuclear Method
ASTM D 4318	Liquid Limit, Plastic Limit, and Plasticity Index of Soils
ASTM D 4791	Flat Particles**,** Elongated Particles**,** or Flat and Elongated Particles in Coarse Aggregate
ASTM D 4867	Effect of Moisture on Asphalt Concrete Paving Mixtures
ASTM D 5444	Mechanical Size Analysis of Extracted Aggregate
ASTM D 5581	Resistance to Plastic Flow of Bituminous Mixtures Using Marshall Apparatus (6" Diameter Specimen)
ASTM D 6926	Preparation of Bituminous Specimens Using MARSHALL Apparatus
ASTM D 6927	MARSHALL Stability and Flow of Bituminous Mixtures
ASTM E 11	Wire-Cloth Sieves for Testing Purposes
ASTM E 178	Dealing with Outlying Observations
AASHTO T 30	Mechanical Analysis of Extracted Aggregate
[AASHTO T 110	Moisture or Volatile Distillates in Bituminous Paving Mixtures**]**
The Asphalt Institute's Manual No. 2 (MS-2)	Mix Design Methods for Asphalt Concrete

MATERIAL REQUIREMENTS

ASTM D 242	Mineral Filler for Bituminous Paving Mixtures
ASTM D 946	Penetration Graded Asphalt Cement for Use in Pavement Construction
ASTM D 3381	Viscosity-Graded Asphalt Cement for Use in Pavement Construction
ASTM D 4552	Classifying Hot-Mix Recycling Agents
AASHTO MP1	Performance Graded Binder Designation

END OF ITEM P-403

PART VI – RIGID PAVEMENT
ITEM P-501 PORTLAND CEMENT CONCRETE PAVEMENT

DESCRIPTION

501-1.1 This work shall consist of pavement composed of portland cement concrete, **[with reinforcement] [without reinforcement]** constructed on a prepared underlying surface in accordance with these specifications and shall conform to the lines, grades, thickness, and typical cross sections shown on the plans.

* * * *

TABLE 1

Sieve Size	Percent Passing
1/2 inch	**95 - 100**
No. 4	**77 - 91**
No. 8	**52 - 75**
No. 16	**35 - 60**
No. 30	**20 - 42**
No. 50	**8 - 30**
No. 100	**0 - 12**
No. 200	**0 - 3**

Fineness modulus requirements within ASTM C 33 of 2.3 to 3.1 shall be changed to 2.9 to 4.0.

* * * *

Prior to approval of mixture design, the Contractor shall submit written certification that the aggregate does not have a history of D-Cracking and that the aggregate is approved by a state Department of Transportation specifically addressing susceptibility to D-Cracking. If the aggregate is not approved by a state agency, the aggregates may be approved provided the aggregate is tested in accordance with ASTM C 666 and receives a durability factor of 95 percent or greater.

* * * *

TABLE 2. GRADATION FOR COARSE AGGREGATE ASTM C 33

Sieve Designations (square openings)		Percentage by Weight Passing Sieves	
in.	mm	*	*
2-1/2	63	*	*
2	50.8	*	*
1-1/2	38.1	*	*
1	25.0	*	*
3/4	19.0	*	*
1/2½	12.5	*	*
3/8	9.5	*	*
No. 4	4.75	*	*
No. 8	2.36	*	*

Aggregate gradations that produce concrete mixtures with well-graded or optimized aggregate combinations may be substituted for the requirements of Tables 1 and Table 2 with prior approval of the Engineer and the FAA. The contractor shall submit complete mixture information necessary to calculate the volumetric components of the mixture.

* * * *

(2) Crushed Stone Aggregate from Kansas. Aggregate shall be approved by the Kansas Department of Transportation (KDOT) ledge classification procedure. Ledges shall be accepted if they meet the KDOT Class 1 requirements. The sodium and magnesium sulfate soundness tests (ASTM C 88) shall not be required, however, the aggregate shall have a soundness (modified freeze-thaw) minimum of 0.90 as determined for the KDOT class 1 rating. The aggregate shall meet all other quality test requirements within these specifications.

(3) Crushed Stone Aggregate from Iowa. Aggregate shall meet the quality requirements of Iowa Department of Transportation (IDOT) Class 3 durability rating and shall meet all other quality test requirements within these specifications.

(4) Crushed Stone Aggregate from Nebraska. Aggregate shall meet the quality test requirements of these specifications or shall have an acceptable rating from another state classification system. Aggregate and aggregate sources that do not meet the Nebraska Department of Roads (NDR) Section 1006 requirements shall not be used unless approved by other accepted State classification procedures.

(5) Other sources of crushed stone aggregate shall be approved if the durability factor as determined by ASTM C 666 is greater than or equal to 95 and all other quality test requirements within these specifications are fulfilled. The FAA will consider and reserves final approval of other State classification procedures.

(6) Crushed gravel and sand-gravel aggregates shall not be required to meet freeze-thaw durability ratings. These aggregates shall be approved for use in concrete by the state highway agency in the state from which the aggregate originates and the state in which they are to be used and shall meet all other criteria within these specifications.

501-2.2 CEMENT. Cement shall conform to the requirements of ASTM **[ ]** Type **[ ]**.

* * * *

as is produced in furnace operations utilizing liming materials or soda ash (sodium carbonate) as an additive shall not be acceptable. The Contractor shall furnish vendor's certified test reports for each shipment of Fly Ash used in the project. The vendor's certified test report can be used for acceptance or the material may be tested independently by the Engineer.

* * * *

Bar mats **ASTM A 184 or A 704**

Welded wire fabric shall be furnished in flat sheets only.

Delete this paragraph when not applicable to the project.

* * * *

501-2.11 EPOXY-RESIN. Epoxy-resin used to anchor dowels and tie bars in pavements shall conform to the requirements of ASTM C 881, Type I, Grade 3, Class C. Class A or B shall be used when the surface temperature of the hardened concrete is below 60 degrees F (16 degrees C).

501-2.12 MATERIAL ACCEPTANCE. Prior to use of materials, the Contractor shall submit certified test reports to the Engineer for those materials proposed for use during construction. The certification shall show the appropriate ASTM test(s) for each material, the test results, and a statement that the material passed or failed.

The Engineer may request samples for testing, prior to and during production, to verify the quality of the materials and to ensure conformance with the applicable specifications.

MIX DESIGN

501-3.1 PROPORTIONS. Concrete shall be designed to achieve a 28-day flexural strength that meets or exceeds the acceptance criteria contained in paragraph 501-5.2 for a flexural strength of **[ ]** psi. The mix shall be designed using the procedures contained in Chapter 7 of the Portland Cement Association's manual, "Design and Control of Concrete Mixtures".

* * * *

substituted or to meet durability requirements for severe freeze/thaw, deicer, or sulfate exposure.

A maximum water/cementitious ratio of 0.45 should be specified. A lower water/cementitious ratio may be necessary for severe freeze/thaw, deicer, or sulfate exposure.

<u>NEBRASKA ONLY</u> – Third paragraph – add the following:

Fine aggregate shall not comprise more than 60 percent of the total aggregate by weight and the maximum amount passing the No. 4 sieve shall not exceed 55 percent for the total blended aggregate.

* * * *

percent by weight of the total cementitious material. If fly ash is used in conjunction with ground granular blast furnace slag the maximum replacement rate shall not exceed 10 percent by weight of total cementitious material.

* * * *

RECOMMENDED AIR CONTENT (PERCENT)

	Maximum Size Aggregate inches (mm)				
Exposure Level	**2(51)**	**1.5(38)**	**1(25)**	**3/4(19)**	**1/2(13)**
Mild	**2.0**	**2.5**	**3.0**	**3.5**	**4.0**
Moderate	**4.0**	**4.5**	**4.5**	**5.0**	**5.5**
Severe	**5.0**	**5.5**	**6.0**	**6.0**	**7.0**

Mild exposure - When desired for other than durability, such as to improve workability. Used where pavement will not be exposed to freezing or to deicing agents.

Moderate exposure - Service in a climate where freezing is expected but where the concrete will not be continually exposed to moisture or free water for long periods prior to freezing and will not be exposed to deicing agents or other aggressive chemicals.

Severe exposure - Concrete which is exposed to deicing chemicals or other aggressive agents or where the concrete may become highly saturated by continual contact with moisture or free water prior to freezing.

* * * *

The mixer shall be examined daily for changes in condition due to accumulation of hard concrete or mortar or wear of blades. The pickup and throwover blades shall be replaced when they have worn down 3/4 inch (19 mm) or more. The Contractor shall have a copy of the manufacturer's design on hand showing dimensions and arrangement of blades in reference to original height and depth.

(3) Truck mixers and truck agitators. Truck mixers used for mixing and hauling concrete and truck agitators used for hauling central-mixed concrete shall conform to the requirements of ASTM C 94.

(4) Nonagitator trucks. Nonagitating hauling equipment shall conform to the requirements of ASTM C 94.

c. Finishing Equipment. The standard method of constructing concrete pavements on FAA projects shall be with an approved slip-form paving equipment designed to spread, consolidate, screed, and float-finish the freshly placed concrete in one complete pass of the machine so a dense and homogeneous pavement is achieved with a minimum of hand finishing. The paver-finisher shall be a heavy duty, self-propelled machine designed specifically for paving and finishing high quality concrete pavements. It shall weigh at least 2200 lbs. per foot of paving lane width and powered by an engine having at least 6.0 horsepower per foot of lane width.

On projects requiring less than 500 square yards of cement concrete pavement or requiring individual placement areas of less than 500 square yards, or irregular areas at locations inaccessible to slip-form paving equipment, cement concrete pavement may be placed with approved placement and finishing equipment utilizing stationary side forms. Hand screeding and float finishing may only be utilized on small irregular areas as allowed by the Engineer.

d. Vibrators. Vibrator shall be the internal type. Operating frequency for internal vibrators shall be between 8,000 and 12,000 vibrations per minute. Average amplitude for internal vibrators shall be 0.025-0.05 inches (0.06-0.13 cm).

The number, spacing, and frequency shall be as necessary to provide a dense and homogeneous pavement and meet the recommendations of ACI 309, Guide for Consolidation of Concrete. Adequate power to operate all vibrators shall be available on the paver. The vibrators shall be automatically controlled so that they shall be stopped as forward motion ceases. The contractor shall provide an electronic or mechanical means to monitor vibrator status. The checks on vibrator status shall occur a minimum of two times per day or when requested by the Engineer.

Hand held vibrators may be used in irregular areas only, but shall meet the recommendations of ACI 309, Guide for Consolidation of Concrete.

e. Concrete Saws. The Contractor shall provide sawing equipment adequate in number of units and power to complete the sawing to the required dimensions. The Contractor shall provide at least one standby saw in good working order and a supply of saw blades at the site of the work at all times during sawing operations.

f. Side Forms. Straight side forms shall be made of steel and shall be furnished in sections not less than 10 feet (3 m) in length. Forms shall have a depth equal to the pavement thickness at the edge, and a base width equal to or greater than the depth. Flexible or curved forms of proper radius shall be used for curves of 100-foot (31 m) radius or less. Forms shall be provided with adequate devices for secure settings so that when in place they will withstand, without visible spring or settlement, the impact and vibration of the consolidating and finishing equipment. Forms with battered top surfaces and bent, twisted or broken forms shall not be used. Built-up forms shall not be used, except as approved by the Engineer. The top face of the form shall not vary from a true plane more than 1/8 inch (3 mm) in 10 feet (3 m), and the upstanding leg shall not vary more than 1/4 inch (6 mm). The forms shall contain provisions for locking the ends of abutting sections together tightly for secure setting. Wood forms may be used under special conditions, when approved by the Engineer.

g. Pavers. The paver shall be fully energized, self-propelled, and designed for the specific purpose of placing, consolidating, and finishing the concrete pavement, true to grade, tolerances, and cross section. It shall be of sufficient weight and power to construct the maximum specified concrete paving lane width as shown in the plans,

at adequate forward speed, without transverse, longitudinal or vertical instability or without displacement. The paver shall be equipped with electronic or hydraulic horizontal and vertical control devices.

501-4.2 FORM SETTING. Forms shall be set sufficiently in advance of the concrete placement to insure continuous paving operation. After the forms have been set to correct grade, the underlying surface shall be thoroughly tamped, either mechanically or by hand, at both the inside and outside edges of the base of the forms. Forms shall be staked into place sufficiently to maintain the form in position for the method of placement.

Form sections shall be tightly locked and shall be free from play or movement in any direction. The forms shall not deviate from true line by more than 1/8 inch (3 mm) at any joint. Forms shall be so set that they will withstand, without visible spring or settlement, the impact and vibration of the consolidating and finishing equipment. Forms shall be cleaned and oiled prior to the placing of concrete.

The alignment and grade elevations of the forms shall be checked and corrections made by the Contractor immediately before placing the concrete.

501-4.3 CONDITIONING OF UNDERLYING SURFACE. The compacted underlying surface on which the pavement will be placed shall be widened approximately 3 feet (1 m) to extend beyond the paving machine track to support the paver without any noticeable displacement. After the underlying surface has been placed and compacted to the required density, the areas that will support the paving machine and the area to be paved shall be trimmed or graded to the plan grade elevation and profile by means of a properly designed machine. The grade of the underlying surface shall be controlled by a positive grade control system using lasers, stringlines, or guide wires. If the density of the underlying surface is disturbed by the trimming operations, it shall be corrected by additional compaction and retested at the option of the Engineer before the concrete is placed except when stabilized subbases are being constructed. If damage occurs on a stabilized subbase, it shall be corrected full depth by the Contractor. If traffic is allowed to use the prepared grade, the grade shall be checked and corrected immediately before the placement of concrete. The prepared grade shall be moistened with water, without saturating, immediately ahead of concrete placement to prevent rapid loss of moisture from concrete. The underlying surface shall be protected so that it will be entirely free of frost when concrete is placed.

* * * *

Aggregates that have become segregated or mixed with earth or foreign material shall not be used. All aggregates produced or handled by hydraulic methods, and washed aggregates, shall be stockpiled or binned for draining at least 12 hours before being batched. Rail shipments requiring more than 12 hours will be accepted as adequate binning only if the car bodies permit free drainage.

Batching plants shall be equipped to proportion aggregates and bulk cement, by weight, automatically using interlocked proportioning devices of an approved type. When bulk cement is used, the Contractor shall use a suitable method of handling the cement from weighing hopper to transporting container or into the batch itself for transportation to the mixer, such as a chute, boot, or other approved device, to prevent loss of cement. The device shall be arranged to provide positive assurance that the cement content specified is present in each batch.

501-4.6 MIXING CONCRETE. The concrete may be mixed at the work site, in a central mix plant or in truck mixers. The mixer shall be of an approved type and capacity. Mixing time shall be measured from the time all materials, except water, are emptied into the drum. All concrete shall be mixed and delivered to the site in accordance with the requirements of ASTM C 94.

Mixed concrete from the central mixing plant shall be transported in truck mixers, truck agitators, or nonagitating trucks. The elapsed time from the addition of cementitious material to the mix until the concrete is deposited in place at the work site shall not exceed 30 minutes when the concrete is hauled in nonagitating trucks, nor 90 minutes when the concrete is hauled in truck mixers or truck agitators. Retempering concrete by adding water or by other means will not be permitted. With transit mixers additional water may be added to the batch materials and additional mixing performed to increase the slump to meet the specified requirements provided the addition of water is performed within 45 minutes after the initial mixing operations and provided the water/cementitious ratio specified in the approved mix design is not exceeded, and approved by the Engineer.

501-4.7 LIMITATIONS ON MIXING AND PLACING. No concrete shall be mixed, placed, or finished when the natural light is insufficient, unless an adequate and approved artificial lighting system is operated.

a. Cold Weather. Unless authorized in writing by the Engineer, mixing and concreting operations shall be discontinued when a descending air temperature in the shade and away from artificial heat reaches 40 degrees F (4 degrees C) and shall not be resumed until an ascending air temperature in the shade and away from artificial heat reaches 35 degrees F (2 degrees C).

The aggregate shall be free of ice, snow, and frozen lumps before entering the mixer. The temperature of the mixed concrete shall not be less than 50 degrees F (10 degrees C) at the time of placement. Concrete shall not be placed on frozen material nor shall frozen aggregates be used in the concrete.

When concreting is authorized during cold weather, water and/or the aggregates may be heated to not more than 150 degrees F (66 degrees C). The apparatus used shall heat the mass uniformly and shall be arranged to preclude the possible occurrence of overheated areas which might be detrimental to the materials.

* * * *

The finished surfaces of the newly laid pavement shall be kept damp by applying a water-fog or mist with approved spraying equipment until the pavement is covered by the curing medium. If necessary, wind screens shall be provided to protect the concrete from an evaporation rate in excess of 0.2 psf per hour as determined in accordance with Figure 2.1.5 in ACI 305R, Hot Weather Concreting, which takes into consideration relative humidity, wind velocity, and air temperature.

When conditions are such that problems with plastic cracking can be expected, and particularly if any plastic cracking begins to occur, the Contractor shall immediately take such additional measures as necessary to protect the concrete surface. Such measures shall consist of wind screens, more effective fog sprays, and similar measures commencing immediately behind the paver. If these measures are not effective in preventing plastic cracking, paving operations shall be immediately stopped.

Prior to the start of paving operation for each day of paving, the contractor shall provide the engineer with a Temperature Management Program for the concrete to be placed to assure that uncontrolled cracking is avoided. As a minimum the program shall address the following items:

(1) Anticipated tensile strains in the fresh concrete as related to heating and cooling of the concrete material.

(2) Anticipated weather conditions such as ambient temperatures, wind velocity, and relative humidity.

(3) Anticipated timing of initial sawing of joint.

501-4.8 PLACING CONCRETE. The Contractor has the option of placing the concrete with either side (fixed) forms or slip-forms. At any point in concrete conveyance, the free vertical drop of the concrete from one point to another or to the underlying surface shall not exceed 3 feet (1 m). Backhoes and Grading equipment shall not be used to distribute the concrete in front of the paver. Front end loaders will not be used unless the contractor demonstrates that they can be used without contaminating the concrete and base course and it is approved by the Engineer.

Hauling equipment or other mechanical equipment can be permitted on adjoining previously constructed pavement when the concrete strength reaches **[a flexural strength of 550 psi (3 792 kPa)] [a compressive strength of 3,500 psi]**, based on the average of four field cured specimens per 2,000 cubic yards (1 530 cubic meters) of concrete placed. Also, subgrade and subbase planers, concrete pavers, and concrete finishing equipment may be permitted to ride upon the edges of previously constructed pavement when the concrete has attained a minimum flexural strength of 400 psi.

*** * * \

of the pavement to longitudinal unit shall not exceed 9 inches. The spacing of internal units shall be uniform and shall not exceed 18 inches.

The term internal vibration means vibrating units located within the specified thickness of pavement section.

The rate of vibration of each vibrating unit shall be within 8000 to 12000 cycles per minute and the amplitude of vibration shall be sufficient to be perceptible on the surface of the concrete along the entire length of the vibrating unit an for a distance of at least one foot. The frequency of vibration or amplitude shall vary proportionately with the rate of travel to result in a uniform density and air content. The paving machine shall be equipped with a tachometer or other suitable device for measuring and indicating the actual frequency of vibrations.

The concrete shall be held at a uniform consistency. The slip-form paver shall be operated with as nearly a continuous forward movement as possible. And all operations of mixing, delivering, and spreading concrete shall be coordinated to provide uniform progress with stopping and starting of the paver held to a minimum. If for any reason, it is necessary to stop the forward movement of the paver, the vibratory and tamping elements shall also be stopped immediately. No tractive force shall be applied to the machine, except that which is controlled from the machine.

When concrete is being placed adjacent to an existing pavement, that part of the equipment which is supported on the existing pavement shall be equipped with protective pads on crawler tracks or rubber-tired wheels on which the bearing surface is offset to run a sufficient distance from the edge of the pavement to avoid breaking the pavement edge.

b. Side-Form Construction. Side form sections shall be straight, free from warps, bends, indentations, or other defects. Defective forms shall be removed from the work. Metal side forms shall be used except at end closures and transverse construction joints where straight forms of other suitable material may be used.

Side forms may be built up by rigidly attaching a section to either top or bottom of forms. If such build-up is attached to the top of metal forms, the build-up shall also be metal.

Width of the base of all forms shall be equal to at least 80 percent of the specified pavement thickness.

Side forms shall be of sufficient rigidity, both in the form and in the interlocking connection with adjoining forms, that springing will not occur under the weight of subgrading and paving equipment or from the pressure of the concrete. The Contractor shall provide sufficient forms so that there will be no delay in placing concrete due to lack of forms.

Before placing side forms, the underlying material shall be at the proper grade. Side forms shall have full bearing upon the foundation throughout their length and width of base and shall be placed to the required grade and alignment of the finished pavement. They shall be firmly supported during the entire operation of placing, compacting, and finishing the pavement.

Forms shall be drilled in advance of being placed to line and grade to accommodate tie bars where these are specified.

Immediately in advance of placing concrete and after all subbase operations are completed, side forms shall be trued and maintained to the required line and grade for a distance sufficient to prevent delay in placing.

Side forms shall remain in place at least 12 hours after the concrete has been placed, and in all cases until the edge of the pavement no longer requires the protection of the forms. Curing compound shall be applied to the concrete immediately after the forms have been removed.

Side forms shall be thoroughly cleaned and oiled each time they are used and before concrete is placed against them.

Concrete shall be spread, screeded, shaped and consolidated by one or more self-propelled machines. These machines shall uniformly distribute and consolidate concrete without segregation so that the completed pavement will conform to the required cross section with a minimum of handwork.

The number and capacity of machines furnished shall be adequate to perform the work required at a rate equal to that of concrete delivery.

Concrete for the full paving width shall be effectively consolidated by internal vibrators without causing segregation. Internal type vibrators' rate of vibration shall be not less than 7,000 cycles per minute. Amplitude of vibration shall be sufficient to be perceptible on the surface of the concrete more than one foot from the vibrating element. The Contractor shall furnish a tachometer or other suitable device for measuring and indicating frequency of vibration.

Power to vibrators shall be connected so that vibration ceases when forward or backward motion of the machine is stopped.

The provisions relating to the frequency and amplitude of internal vibration shall be considered the minimum requirements and are intended to ensure adequate density in the hardened concrete.

c. Consolidation Testing. The provisions relating to the frequency and amplitude of internal vibration shall be considered the minimum requirements and are intended to ensure adequate density in the hardened concrete. If a lack of consolidation of the concrete is suspected by the Engineer, additional referee testing may be required. Referee testing of hardened concrete will be performed by cutting cores from the finished pavement after a minimum of 24 hours curing. Density determinations will be made based on the water content of the core as taken. ASTM C 642 shall be used for the determination of core density in the saturated-surface dry condition. Referee cores will be taken at the minimum rate of one for each 500 cubic yards of pavement, or fraction thereof.

The average density of the cores shall be at least 97 percent of the original mix design density, with no cores having a density of less than 96 percent of the original mix design density.

Failure to meet the above requirements will be considered as evidence that the minimum requirements for vibration are inadequate for the job conditions, and additional vibrating units or other means of increasing the effect of vibration shall be employed so that the density of the hardened concrete as indicated by further referee testing shall conform to the above listed requirements.

501-4.9 STRIKE-OFF OF CONCRETE AND PLACEMENT OF REINFORCEMENT. Following the placing of the concrete, it shall be struck off to conform to the cross section shown on the plans and to an elevation such that when the concrete is properly consolidated and finished, the surface of the pavement shall be at the elevation shown on the plans. When reinforced concrete pavement is placed in two layers, the bottom layer shall be struck off to such length and depth that the sheet of reinforcing steel fabric or bar mat may be laid full length on the concrete in its final position without further manipulation. The reinforcement shall then be placed directly upon the concrete, after which the top layer of the concrete shall be placed, struck off, and screeded. If any portion of the bottom layer of concrete has been placed more than 30 minutes without being covered with the top layer or if initial set has taken place, it shall be removed and replaced with freshly mixed concrete at the Contractor's expense. When reinforced concrete is placed in one layer, the reinforcement may be positioned in advance of concrete placement or it may be placed in plastic concrete by mechanical or vibratory means after spreading.

Reinforcing steel, at the time concrete is placed, shall be free of mud, oil, or other organic matter that may adversely affect or reduce bond. Reinforcing steel with rust, mill scale or a combination of both will be considered satisfactory, provided the minimum dimensions, weight, and tensile properties of a hand wire-brushed test specimen are not less than the applicable ASTM specification requirements.

501-4.10 JOINTS. Joints shall be constructed as shown on the plans and in accordance with these requirements. All joints shall be constructed with their faces perpendicular to the surface of the pavement and finished or edged as shown on the plans. Joints shall not vary more than 1/2 inch (13 mm) from their designated position and shall be true to line with not more than 1/4-inch (6 mm) variation in 10 feet (3 m). The surface across the joints shall be

tested with a 10-foot (3 m) straightedge as the joints are finished and any irregularities in excess of 1/4 inch (6 mm) shall be corrected before the concrete has hardened. All joints shall be so prepared, finished, or cut to provide a groove of uniform width and depth as shown on the plans.

a. Construction. Longitudinal construction joints shall be slip-formed or formed against side forms with or without keyways, as shown in the plans.

Transverse construction joints shall be installed at the end of each day's placing operations and at any other points within a paving lane when concrete placement is interrupted for more than 30 minutes or it appears that the concrete will obtain its initial set before fresh concrete arrives. The installation of the joint shall be located at a planned contraction or expansion joint. If placing of the concrete is stopped, the Contractor shall remove the excess concrete back to the previous planned joint.

b. Contraction. Contraction joints shall be installed at the locations and spacing as shown on the plans. Contraction joints shall be installed to the dimensions required by forming a groove or cleft in the top of the slab while the concrete is still plastic or by sawing a groove into the concrete surface after the concrete has hardened. When the groove is formed in plastic concrete the sides of the grooves shall be finished even and smooth with an edging tool. If an insert material is used, the installation and edge finish shall be according to the manufacturer's instructions. The groove shall be finished or cut clean so that spalling will be avoided at intersections with other joints. Grooving or sawing shall produce a slot at least 1/8 inch (3 mm) wide and to the depth shown on the plans.

c. Expansion. Expansion joints shall be installed as shown on the plans. The premolded filler of the thickness as shown on the plans, shall extend for the full depth and width of the slab at the joint, except for space for sealant at the top of the slab. The filler shall be securely staked or fastened into position perpendicular to the proposed finished surface. A cap shall be provided to protect the top edge of the filler and to permit the concrete to be placed and finished. After the concrete has been placed and struck off, the cap shall be carefully withdrawn leaving the space over the premolded filler. The edges of the joint shall be finished and tooled while the concrete is still plastic. Any concrete bridging the joint space shall be removed for the full width and depth of the joint.

* * * *

e. Tie bars. Tie bars shall consist of deformed bars installed in joints as shown on the plans. Tie bars shall be placed at right angles to the centerline of the concrete slab and shall be spaced at intervals shown on the plans. They shall be held in position parallel to the pavement surface and in the middle of the slab depth. When tie bars extend into an unpaved lane, they may be bent against the form at longitudinal construction joints, unless threaded bolt or other assembled tie bars are specified. These bars shall not be painted, greased, or enclosed in sleeves. When slip-form operations call for tie bars, two-piece hook bolts can be installed in the female side of the keyed joint provided the installation is made without distorting the keyed dimensions or causing edge slump. If a bent tie bar installation is used, the tie bars shall be inserted through the keyway liner only on the female side of the joint. In no case shall a bent tie bar installation for male keyways be permitted.

f. Dowel bars. Dowel bars or other load-transfer units of an approved type shall be placed across joints in the manner as shown on the plans. They shall be of the dimensions and spacings as shown and held rigidly in the middle of the slab depth in the proper horizontal and vertical alignment by an approved assembly device to be left permanently in place. The dowel or load-transfer and joint devices shall be rigid enough to permit complete assembly as a unit ready to be lifted and placed into position. A metal, or other type, dowel expansion cap or sleeve shall be furnished for each dowel bar used with expansion joints. These caps shall be substantial enough to prevent collapse and shall be placed on the ends of the dowels as shown on the plans. The caps or sleeves shall fit the dowel bar tightly and the closed end shall be watertight. The portion of each dowel painted with rust preventative paint, as required under paragraph 501-2.7 and shown on the plans to receive a debonding lubricant, shall be thoroughly coated with asphalt MC-70, or an approved lubricant, to prevent the concrete from bonding to that portion of the dowel. If free-sliding plastic-coated or epoxy-coated steel dowels are used, a lubrication bond breaker shall be used except when approved pullout tests indicate it is not necessary. Where butt-type joints with dowels are designated, the exposed end of the dowel shall be oiled.

Dowel bars at contraction joints may be placed in the full thickness of pavement by a mechanical device approved by the Engineer. The device shall be capable of installing dowel bars within the maximum permissible alignment tolerances. Dowels bars at longitudinal construction joints shall be bonded in drilled holes.

g. Installation. All devices used for the installation of expansion joints shall be approved by the Engineer.

The top of an assembled joint device shall be set at the proper distance below the pavement surface and the elevation shall be checked. Such devices shall be set to the required position and line and shall be securely held in place by stakes or other means to the maximum permissible tolerances during the pouring and finishing of the concrete. The premolded joint material shall be placed and held in a vertical position; if constructed in sections, there shall be no offsets between adjacent units.

Dowel bars and assemblies shall be checked for position and alignment. The maximum permissible tolerances on dowel bar alignment shall be in accordance with paragraph 501-5.2e(6). During the concrete placement operation, it is advisable to place plastic concrete directly on dowel assemblies immediately prior to passage of the paver to help maintain dowel position and alignment within maximum permissible tolerances.

When concrete is placed using slip-form pavers, dowels and tie bars shall be placed in longitudinal construction joints by bonding the dowels or tie bars into holes drilled into the hardened concrete. Holes approximately 1/8-inch to 1/4-inch (3 to 6 mm) greater in diameter than the dowel or tie bar shall be drilled with rotary-type core drills that must be held securely in place to drill perpendicularly into the vertical face of the pavement slab. Rotary-type percussion drills may be used provided that spalling of concrete does not occur. Any damage of the concrete shall be repaired by the Contractor in a method approved by the Engineer. Dowels or tie bars shall be bonded in the drilled holes using an epoxy resin material. Installation procedures shall be adequate to insure that the area around dowels is completely filled with epoxy grout. Epoxy shall be injected into the back of the hole and displaced by the insertion of the dowel bar. Bars shall be completely inserted into the hole and shall not be withdrawn and reinserted creating air pockets in the epoxy around the bar. The Contractor shall furnish a template for checking the position and alignment of the dowels. Dowel bars shall not be less than 10 inches (25 cm) from a transverse joint and shall not interfere with dowels in the transverse direction.

h. Sawing of Joints. Joints shall be cut as shown on the plans. Equipment shall be as described in paragraph 501-4.1. The circular cutter shall be capable of cutting a groove in a straight line and shall produce a slot at least

1/8 inch (3 mm) wide and to the depth shown on the plans. The top portion of the slot shall be widened by sawing to provide adequate space for joint sealers as shown on the plans. Sawing shall commence as soon as the concrete has hardened sufficiently to permit cutting without chipping, spalling, or tearing and before uncontrolled shrinkage cracking of the pavement occurs. Sawing shall be carried on both during the day and night as required. The joints shall be sawed at the required spacing, consecutively in sequence of the concrete placement. Curing compound, if being used as the cure type, shall be reapplied in the initial sawcut and maintained for the remaining cure period. Curing compound shall not be applied, and used as the cure method, to any final concrete face that is to receive a sealant.

501-4.11 FINAL STRIKE-OFF, CONSOLIDATION, AND FINISHING.

a. Sequence. The sequence of operations shall be the strike-off, floating and removal of laitance, straightedging, and final surface finish. The addition of superficial water to the surface of the concrete to assist in finishing operations will not be permitted.

b. Finishing at Joints. The concrete adjacent to joints shall be compacted or firmly placed without voids or segregation against the joint material; it shall be firmly placed without voids or segregation under and around all load-transfer devices, joint assembly units, and other features designed to extend into the pavement. Concrete adjacent to joints shall be mechanically vibrated as required in paragraph 501-4.8.a. After the concrete has been placed and vibrated adjacent to the joints, the finishing machine shall be operated in a manner to avoid damage or misalignment of joints. If uninterrupted operations of the finishing machine, to, over, and beyond the joints, cause segregation of concrete, damage to, or misalignment of the joints, the finishing machine shall be stopped when the screed is approximately 8 inches (20 cm) from the joint. Segregated concrete shall be removed from the front of and off the joint; and the forward motion of the finishing machine shall be resumed. Thereafter, the finishing machine may be run over the joint without lifting the screed, provided there is no segregated concrete immediately between the joint and the screed or on top of the joint.

c. Machine Finishing. The concrete shall be spread as soon as it is placed, and it shall be struck off and screeded by a finishing machine. The machine shall go over each area as many times and at such intervals as necessary to give to proper consolidation and to leave a surface of uniform texture. Excessive operation over a given area shall be avoided. When side forms are used, the tops of the forms shall be kept clean by an effective device attached to the machine, and the travel of the machine on the forms shall be maintained true without lift, wobbling, or other variation tending to affect the precision finish. During the first pass of the finishing machine, a uniform ridge of concrete shall be maintained ahead of the front screed for its entire length. When in operation, the screed shall be moved forward with a combined longitudinal and transverse shearing motion, always moving in the direction in which the work is progressing, and so manipulated that neither end is raised from the side forms during the striking-off process. If necessary, this shall be repeated until the surface is of uniform texture, true to grade and cross section, and free from porous areas.

d. Hand Finishing. Hand finishing methods will not be permitted, except under the following conditions: in the event of breakdown of the mechanical equipment, hand methods may be used to finish the concrete already deposited on the grade; in areas of narrow widths or of irregular dimensions where operation of the mechanical equipment is impractical. Concrete, as soon as placed, shall be struck off and screeded. An approved portable screed shall be used. A second screed shall be provided for striking off the bottom layer of concrete when reinforcement is used.

The screed for the surface shall be a least 2 feet (0.6 m) longer than the maximum width of the slab to be struck off. It shall be of approved design, sufficiently rigid to retain its shape, and shall be constructed either of metal or of other suitable material covered with metal. Consolidation shall be attained by the use of suitable vibrators.

e. Floating. After the concrete has been struck off and consolidated, it shall be further smoothed and trued by means of a longitudinal float using one of the following methods:

(1) Hand Method. Long-handled floats shall not be less than 12 feet (3.6 m) in length and 6 inches (15 cm) in width, stiffened to prevent flexibility and warping. The float shall be operated from foot bridges spanning but not touching the concrete or from the edge of the pavement. Floating shall pass gradually from one

side of the pavement to the other. Forward movement along the centerline of the pavement shall be in successive advances of not more than one-half the length of the float. Any excess water or laitance in excess of 1/8-inch (3 mm) thick shall be removed and wasted.

(2) Mechanical method. The Contractor may use a machine composed of a cutting and smoothing float(s), suspended from and guided by a rigid frame and constantly in contact with, the side forms or underlying surface. If necessary, long-handled floats having blades not less than 5 feet (1.5 m) in length and 6 inches (15 cm) in width may be used to smooth and fill in open-textured areas in the pavement. When the crown of the pavement will not permit the use of the mechanical float, the surface shall be floated transversely by means of a long-handled float. Care shall be taken not to work the crown out of the pavement during the operation. After floating, any excess water and laitance in excess of 1/8-inch (3 mm) thick shall be removed and wasted. Successive drags shall be lapped one-half the length of the blade.

f. Straight-edge Testing and Surface Correction. After the pavement has been struck off and while the concrete is still plastic, it shall be tested for trueness with a Contractor furnished 16-foot (5 m) straightedge swung from handles 3 feet (1 m) longer than one-half the width of the slab. The straightedge shall be held in contact with the surface in successive positions parallel to the centerline and the whole area gone over from one side of the slab to the other, as necessary. Advancing shall be in successive stages of not more than one-half the length of the straightedge. Any excess water and laitance in excess of 1/8-inch (3 mm) thick shall be removed from the surface of the pavement and wasted. Any depressions shall be immediately filled with freshly mixed concrete, struck off, consolidated, and refinished. High areas shall be cut down and refinished. Special attention shall be given to assure that the surface across joints meets the smoothness requirements of paragraph 501-5.2e(3). Straightedge testing and surface corrections shall continue until the entire surface is found to be free from observable departures from the straightedge and until the slab conforms to the required grade and cross section. The use of long-handled wood floats shall be confined to a minimum; they may be used only in emergencies and in areas not accessible to finishing equipment.

501-4.12 SURFACE TEXTURE. The surface of the pavement shall be finished with either a brush or broom, burlap drag, or artificial turf finish for all newly constructed concrete pavements. It is important that the texturing equipment not tear or unduly roughen the pavement surface during the operation. Any imperfections resulting from the texturing operation shall be corrected.

a. Brush or Broom Finish. If the pavement surface texture is to be a type of brush or broom finish, it shall be applied when the water sheen has practically disappeared. The equipment shall operate transversely across the pavement surface, providing corrugations that are uniform in appearance and approximately 1/16 of an inch (2 mm) in depth.

b. Burlap Drag Finish. If a burlap drag is used to texture the pavement surface, it shall be at least 15 ounces per square yard (555 grams per square meter). To obtain a textured surface, the transverse threads of the burlap shall be removed approximately 1 foot (0.3 m) from the trailing edge. A heavy buildup of grout on the burlap threads produces the desired wide sweeping longitudinal striations on the pavement surface. The corrugations shall be uniform in appearance and approximately 1/16 of an inch (2 mm) in depth.

c. Artificial Turf Finish. If artificial turf is used to texture the surface, it shall be applied by dragging the surface of the pavement in the direction of concrete placement with an approved full-width drag made with artificial turf. The leading transverse edge of the artificial turf drag will be securely fastened to a lightweight pole on a traveling bridge. At least 2 feet of the artificial turf shall be in contact with the concrete surface during dragging operations. A variety of different types of artificial turf are available and approval of any one type will be done only after it has been demonstrated by the Contractor to provide a satisfactory texture. One type that has provided satisfactory texture consists of 7,200 approximately 0.85-inches-long polyethylene turf blades per square foot. The corrugations shall be uniform in appearance and approximately 1/16 of an inch (2 mm) in depth.

* * * *

shall not be closer than 3 inches (76 mm) or more than 5 inches (127 mm) from the longitudinal joints. Cleanup of waste material shall be continuous during the grooving operation. Waste material shall be disposed of in an approved manner. Waste material shall not be allowed to enter the airport storm or sanitary sewer system.

PLASTIC GROOVES. The grooves formed in the plastic concrete shall be 1/4 inch (6 mm) by 1/4 inch (6 mm) by 1-1/2 inches (38 mm). The grooves shall be continuous for the entire runway length and width. The tolerances for the grooves formed in plastic concrete shall meet the following:

Alignment tolerance.

Plus or minus 3 inches (76 mm) in alignment for 75 feet (23 m).

Groove tolerance.

Minimum depth 1/8 inch (3 mm)

Maximum depth 3/8 inch (10 mm).

Minimum width 1/8 inch (3 mm).

Maximum width 3/8 inch (10 mm).

Center-to-center spacing.

Minimum spacing 1-1/4 inches (32 mm).

Maximum spacing 2 inches (51 mm).

WIRE COMBING. The wire combing technique shall use steel combs or tines of various dimensions to form groove-like texture in the plastic concrete pavement and shall provide grooves that are approximately 1/8 inch (3 mm) by 1/8 inch (3 mm) spaced 1/2 inch (13 mm) center-to center. The wire combing shall be constructed over the full pavement width. The equipment shall operate transversely across the pavement surface, perpendicular to the pavement centerline.

*** * * \

* * * *

have been removed, the sides of the slab shall be cured as outlined in one of the methods indicated in paragraph 501-4.14. Major honeycombed areas shall be considered as defective work and shall be removed and replaced in accordance with paragraph 501-5.2(f).

501-4.16 SEALING JOINTS. The joints in the pavement shall be sealed in accordance with Item [P-605].

* * * *

c. Slabs With Cracks through Interior Areas. Interior area is defined as that area more than 6 inches (600 mm) from either adjacent original transverse joint. The full slab shall be removed and replaced at no cost to the owner, when there are any full depth cracks, or cracks greater than 4" in depth, that extend into the interior area.

d. Cracks Close To and Parallel To Transverse Joints. All cracks essentially parallel to original transverse joints, extending full depth of the slab, and lying wholly within 6 inches either side of the joint shall be treated as specified hereinafter. Any crack extending more than 6 inches (600 mm) from the transverse joint shall be treated as specified above in subparagraph "Slabs With Cracks Through Interior Area."

(1) Full Depth Cracks Present, Original Joint Not Opened. When the original uncracked transverse joint has not opened, the crack shall be sawed and sealed, and the original transverse joint filled with epoxy resin as specified below. The crack shall be sawed with equipment specially designed to follow random cracks. The reservoir for joint sealant in the crack shall be formed by sawing to a depth of 3/4 inch (19 mm), plus or minus 1/16 inch (1.6 mm), and to a width of 5/8 inch (16 mm), plus or minus 1/8 inch (3.2 mm). Any equipment or procedure which causes raveling or spalling along the crack shall be modified or replaced to prevent such raveling or spalling. The joint sealant shall be a liquid sealant as specified. Installation of joint seal shall be as specified for sealing joints or as directed. If the joint sealant reservoir has been sawed out, the reservoir and as much of the lower saw cut as possible shall be filled with epoxy resin, Type IV, Grade 2, thoroughly tooled into the void using approved procedures. If only the original narrow saw cut has been made, it shall be cleaned and pressure injected with epoxy resin, Type IV, Grade 1, using approved procedures. If filler type material has been used to form a weakened plane in the transverse joint, it shall be completely sawed out and the saw cut pressure injected with epoxy resin, Type IV, Grade 1, using approved procedures. Where a parallel crack goes part way across paving lane and then intersects and follows the original transverse joint which is cracked only for the remained of the width, it shall be treated as specified above for a parallel crack, and the cracked original joint shall be prepared and sealed as originally designed.

(2) Full Depth Cracks Present, Original Transverse Joint Also Cracked. At a transverse joint, if there is any place in the lane width where a parallel crack and a cracked portion of the original joint overlap, the entire slab containing the crack shall be removed and replaced for the full lane width and length.

e. Removal and Replacement of Full Slabs. Where it is necessary to remove full slabs, unless there are keys or dowels present, all edges of the slab shall be cut full depth with a concrete saw. All saw cuts shall be perpendicular to the slab surface. If keys, dowels, or tie bars are present along any edges, these edges shall be sawed full depth 24 inches (150 mm) from the edge if only keys are present, or just beyond the end of the dowels or tie bars if they are present. These joints shall then be carefully sawed on the joint line to within 1 inch (25 mm) of the depth of the dowel or key.

The main slab shall be further divided by sawing full depth, at appropriate locations, and each piece lifted out and removed. Suitable equipment shall be used to provide a truly vertical lift, and approved safe lifting devices used for attachment to the slabs. The narrow strips along keyed or doweled edges shall be carefully broken up and removed using light, hand-held jackhammers, 30 LB (14 kg) or less, or other approved similar equipment.

Care shall be taken to prevent damage to the dowels, tie bars, or keys or to concrete to remain in place. The joint face below keys or dowels shall be suitably trimmed so that there is not abrupt offset in any direction greater than 1/2 inch (12 mm) and no gradual offset greater than 1 inch (25 mm) when tested in a horizontal direction with a 12-foot (3.6 m) straightedge.

No mechanical impact breakers, other than the above hand-held equipment shall be used for any removal of slabs. If underbreak between 1-1/2 and 4 inches (37 and 100 mm) deep occurs at any point along any edge, the area shall be repaired as directed before replacing the removed slab. Procedures directed will be similar to those specified for surface spalls, modified as necessary.

If underbreak over 4 inches (100 mm) deep occurs, the entire slab containing the underbreak shall be removed and replaced. Where there are no dowels, tie bars, or keys on an edge, or where they have been damaged, dowels of the size and spacing as specified for other joints in similar pavement shall be installed by epoxy grouting them into

holes drilled into the existing concrete using procedures as specified. Original damaged dowels or tie bars shall be cut off flush with the joint face. Protruding portions of dowels shall be painted and lightly oiled. All 4 edges of the new slab shall thus contain dowels or original keys or original tie bars.

Placement of concrete shall be as specified for original construction. Prior to placement of new concrete, the underlying material (unless it is stabilized) shall be re-compacted and shaped as specified in the appropriate SECTION of these specifications. The surfaces of all four joint faces shall be cleaned of all loose material and contaminants and coated with a double application of membrane forming curing compound as bond breaker. Care shall be taken to prevent any curing compound from contacting dowels or tie bars. The resulting joints around the new slab shall be prepared and sealed as specified for original construction.

f. Repairing Spalls Along Joints. Where directed, spalls along joints of new slabs, and along parallel cracks used as replacement joints, shall be repaired by first making a vertical saw cut at least 1 inch (25 mm) outside the spalled area and to a depth of at least 2 inches (50 mm). Saw cuts shall be straight lines forming rectangular areas. The concrete between the saw cut and the joint, or crack, shall be chipped out to remove all unsound concrete and at least 1/2 inch (12 mm) of visually sound concrete. The cavity thus formed shall be thoroughly cleaned with high-pressure water jets supplemented with compressed air to remove all loose material. Immediately before filling the cavity, a prime coat of epoxy resin, Type III, Grade I, shall be applied to the dry cleaned surface of all sides and bottom of the cavity, except any joint face. The prime coat shall be applied in a thin coating and scrubbed into the surface with a stiff-bristle brush. Pooling of epoxy resin shall be avoided. The cavity shall be filled with low slump Portland cement concrete or mortar or with epoxy resin concrete or mortar. Concrete shall be used for larger spalls, generally those more than 1/2 cu. ft. (0.014 m3) in size, and mortar SHALL BE USED FOR THE SMALLER ONES. ANY SPALL LESS THAN 0.1 CU. FT. (O.OO3 m3) shall be repaired only with epoxy resin mortar or a Grade III epoxy resin. Portland cement concrete and mortar mixtures shall be proportioned as directed and shall be mixed, placed, consolidated, and cured as directed. Epoxy resin mortars shall be made with Type III, Grade 1, epoxy resin, using proportions and mixing and placing procedures as recommended by the manufacturer and approved by the Engineer. The epoxy resin materials shall be placed in the cavity in layers not over 2 inches (50 mm) thick. The time interval between placement of additional layers shall be such that the temperature of the epoxy resin material does not exceed 140oF (60oC) at any time during hardening. Mechanical vibrators and hand tampers shall be used to consolidate the concrete or mortar. Any repair material on the surrounding surfaces of the existing concrete shall be removed before it hardens. Where the spalled area abuts a joint, an insert or other bond-breaking medium shall be used to prevent bond at the joint face. A reservoir for the joint sealant shall be sawed to the dimensions required for other joints, or as required to be routed for cracks. The reservoir shall be thoroughly cleaned and sealed with the sealer specified for the joints. If any spall penetrates half the depth of the slab or more, the entire slab shall be removed and replaced as previously specified.

* * * *

is not widened during epoxy resin injection. All epoxy resin injection shall take place in the presence of the Engineer. Cracks that are greater than 4 inches deep shall be treated in accordance with paragraphs 4.19b and 4.19c.

b. Slabs With Cracks through Interior Areas. Interior area is defined as that area more than 6 inches from any designed joint location. Slabs with any cracks greater than 4 –inches deep, that extend into the interior area, regardless of direction, shall be removed and replaced as specified in paragraph 501-4.19 d.

*****

other approved similar equipment. Care shall be taken to prevent damage to the dowels, tie bars, or keys or to concrete to remain in place. The joint face below keys or dowels shall be suitably trimmed so that there is not abrupt offset in any direction greater than 1/2 inch and no gradual offset greater than 1 inch when tested in a horizontal direction with a 12 foot straightedge. No mechanical impact breakers, other than the above hand-held equipment shall be used for any removal of slabs. If underbreak between 1-1/2 and 4 inches deep occurs at any point along any edge, the area shall be repaired as directed before replacing the removed slab. Procedures directed will be similar to those specified for surface spalls, modified as necessary. If underbreak over 4 inches deep occurs, the entire slab containing the underbreak shall be removed and replaced. Where there are no dowels, tie bars, or keys on an edge, or where they have been damaged, dowels of the size and spacing as specified for other joints in similar pavement shall be installed by epoxy grouting them into holes drilled into the existing concrete using procedures as specified. Original damaged dowels or tie bars shall be cut off flush with the joint face. Protruding portions of dowels shall be painted and lightly oiled. All four edges of the new slab shall contain dowels. Placement of concrete shall be as specified for original construction. Prior to placement of new concrete, the underlying material (unless it is stabilized) shall be recompacted and shaped as specified in the appropriate SECTION of these specifications. The surfaces of all four joint faces shall be cleaned of all loose material and contaminants and coated with a double application of membrane forming curing compound as bond breaker.

e. Repairing Spalls Along Joints. Where directed, spalls along joints of new slabs, and along parallel cracks used as replacement joints, shall be repaired by first making a vertical saw cut at least 1 inch outside the spalled area and to a depth of at least 2 inches. Saw cuts shall be straight lines forming rectangular areas. The concrete between the saw cut and the joint, or crack, shall be chipped out to remove all unsound concrete and at least 1/2 inch of visually sound concrete. The cavity thus formed shall be thoroughly cleaned with high pressure water jets supplemented with compressed air to remove all loose material. Immediately before filling the cavity, a prime coat of epoxy resin, Type III, Grade I, shall be applied to the dry cleaned surface of all sides and bottom of the cavity, except any joint face. The prime coat shall be applied in a thin coating and scrubbed into the surface with a stiff-bristle brush. Pooling of epoxy resin shall be avoided. The cavity shall be filled with low slump Portland cement concrete or mortar or with epoxy resin concrete or mortar. Concrete shall be used for larger spalls, generally those more than 1/2 cu. ft. (0.014 m3) in size, and mortar SHALL BE USED FOR THE SMALLER ONES. ANY SPALL LESS THAN 0.1 CU. FT. (0.003 m3) shall be repaired only with epoxy resin mortar or a Grade III epoxy resin. Portland cement concrete and mortar mixtures shall be proportioned as directed and shall be mixed, placed, consolidated, and cured as directed. Epoxy resin mortars shall be made with Type III, Grade 1, epoxy resin, using proportions and mixing and placing procedures as recommended by the manufacturer and approved by the Engineer. The epoxy resin materials shall be placed in the cavity in layers not over 2 inches thick. The time interval between placement of additional layers shall be such that the temperature of the epoxy resin material does not exceed 140oF (60oC) at any time during hardening. Mechanical vibrators and hand tampers shall be used to consolidate the concrete or mortar. Any repair material on the surrounding surfaces of the existing concrete shall be removed before it hardens. Where the spalled area abuts a joint, an insert or other bond-breaking medium shall be used to prevent bond at the joint face. A reservoir for the joint sealant shall be sawed to the dimensions required for other joints, or as required to be routed for cracks. The reservoir shall be thoroughly cleaned and sealed with the sealer specified for the joints. If any spall penetrates half the depth of the slab or more, the entire slab shall be removed and replaced as previously specified.

* * * *

501-4.20 EXISTING CONCRETE PAVEMENT REMOVAL AND REPAIR.

* * * *

The edge of existing concrete pavement against which new pavement abuts shall be protected from damage at all times. Areas that are damaged during construction shall be repaired at not cost to the Owner; repair of previously existing damage areas **[will be paid for as listed in the bid schedule] [will be considered a subsidiary part of concrete pavement construction]**.

(1) Spall Repair. Spalls shall be repaired where indicated and where directed. Repair materials and procedures shall be as previously specified in subparagraph "Repairing Spalls Along Joints."

(2) Underbreak Repair. All underbreak shall be repaired. First, all delaminated and loose material shall be carefully removed. Next, the underlying material shall be recompacted, without addition of any new material. Finally, the void shall be completely filled with paving concrete, thoroughly consolidated. Care shall be taken to produce an even joint face from top to bottom. Prior to placing concrete, the underlying material shall be thoroughly moistened. After placement, the exposed surface shall be heavily coated with curing compound.

(3) Underlying Material. The underlying material adjacent to the edge of an under the existing pavement which is to remain in place shall be protected from damage or disturbance during removal operations and until placement of new concrete, and shall be shaped as shown on the drawings or as directed. Sufficient material shall be kept in place outside the joint line to prevent disturbance (or sloughing) of material under the pavement that is to remain in place. Any material under the portion of the concrete pavement to remain in place, which is disturbed or loses its compaction shall be carefully removed and replaced with concrete as specified in paragraph "Underbreak Repair." The underlying material outside the joint line shall be thoroughly compacted and moist when new concrete is placed.

* * * *

pavement to stay in place, [including dowels, tie bars or keys,] shall first be cut full depth with a standard diamond-type concrete saw. [If keys or dowels are present at this joint, the saw cut shall be made full depth 6 inches from the joint if only keys are present, or just beyond the end of dowels if dowels are present. The edge shall then be carefully sawed on the joint line to within 1 inch of the top of the dowel or key.] Next, a full depth saw cut shall be made parallel to the joint at least 24 inches from the joint and at least 12 inches from the end of any dowels. All pavement between this last saw cut and the joint line shall be carefully broken up and removed using hand-held jackhammers, 30 lb. (14 kg) or less, or the approved light-duty equipment which will not cause stress to propagate across the joint saw cut and cause distress in the pavement which is to remain in place. [Where dowels or keys are present, care shall be taken to produce an even, vertical joint face below the dowels or keys. If the Contractor is unable to produce such a joint face, the Contractor shall saw the dowels or keys flush with the joint. The Contractor shall then install new dowels, of the size and spacing used for other similar joints, by epoxy resin bonding them in holes drilled in the joint face as specified in paragraph "Placing dowels and Tie-bars. All this shall be at no additional cost to the Owner.] [Dowels of the size and spacing indicated shall be installed as shown on the drawings by epoxy resin bonding them in holes drilled in the joint face as specified in paragraph "Placing Dowels and Tie Bars".] The joint face shall be sawed or otherwise trimmed so that there is no abrupt offset in any direction greater than 1/2-inch and no gradual offset greater than 1 inch when tested in a horizontal direction with a 12 ft. straightedge.

b. Edge Repair.

*****

[ ] square yards ([ ] square meters).]
[a day's production not to exceed 2,000 cubic yards (1 530 cubic meters).]
[a day's production not to exceed [ ] square yards ([ ] square meters).]

Testing organizations performing these tests shall meet the requirements of ASTM C 1077, including accreditation. The accreditation will include ASTM C 78. The Contractor shall bear the cost of providing curing facilities for the strength specimens, per paragraph 501-5.1a(3), and coring and filling operations, per paragraph 501-5.1b(1).

* * * *

(4) Acceptance. Acceptance of pavement for flexural strength will be determined by the Engineer in accordance with paragraph 501-5.2b.

* *

Preventing loss of moisture is extremely important since relatively small amounts of surface drying of flexural specimens can induce tensile stresses in the extreme fibers that will markedly reduce the indicated flexural strength.

When the design strength in paragraph 501-3.1 is based on compressive strength, this paragraph should be revised as follows:

a. Compressive Strength.

(1) Sampling. Each lot shall be divided into four equal sublots. One sample shall be taken for each sublot from the plastic concrete delivered to the job site. Sampling locations shall be determined by the Engineer in accordance with random sampling procedures contained in ASTM D 3665. The concrete shall be sampled in accordance with ASTM C 172.

(2) Testing. Two (2) specimens shall be made from each sample. Specimens shall be made in accordance with ASTM C 31 and the compressive strength of each specimen shall be determined in accordance with ASTM C 39. The compressive strength for each sublot shall be computed by averaging the results of the two test specimens representing that sublot.

(3) Curing. The Contractor shall provide adequate facilities for the initial curing of cylinders. During the 24 hours after molding, the temperature immediately adjacent to the specimens must be maintained in the range of 60 to 80 degrees F (16 to 27 degrees C), and loss of moisture from the specimens must be prevented. The specimens may be stored in tightly constructed wooden boxes, damp sand pits, temporary buildings at construction sites, under wet burlap in favorable weather or in heavyweight closed plastic bags, or use other suitable methods, provided the temperature and moisture loss requirements are met.

* *

b. Pavement Thickness.

(1) Sampling. Each lot shall be divided into four equal sublots and one core shall be taken by the Contractor for each sublot. Sampling locations shall be determined by the Engineer in accordance with random sampling procedures contained in ASTM D 3665. Areas, such as thickened edges, with planned variable thickness, shall be excluded from sample locations.

Cores shall be neatly cut with a core drill. The Contractor shall furnish all tools, labor, and materials for cutting samples and filling the cored hole. Core holes shall be filled by the Contractor with a non-shrink grout approved by the Engineer within one day after sampling.

(2) Testing. The thickness of the cores shall be determined by the Engineer by the average caliper measurement in accordance with ASTM C 174.

(3) Acceptance. Acceptance of pavement for thickness shall be determined by the Engineer in accordance with paragraph 501-5.2c.

c. Partial Lots. When operational conditions cause a lot to be terminated before the specified number of tests have been made for the lot, or when the Contractor and Engineer agree in writing to allow overages or minor

placements to be considered as partial lots, the following procedure will be used to adjust the lot size and the number of tests for the lot.

Where three sublots have been produced, they shall constitute a lot. Where one or two sublots have been produced, they shall be incorporated into the next lot or the previous lot and the total number of sublots shall be used in the acceptance criteria calculation, i.e., n=5 or n=6.

d. Outliers. All individual flexural strength tests within a lot shall be checked for an outlier (test criterion) in accordance with ASTM E 178, at a significance level of 5 percent. Outliers shall be discarded, and the PWL shall be determined using the remaining test values.

501-5.2 ACCEPTANCE CRITERIA.

a. General. Acceptance will be based on the following characteristics of the completed pavement:

(1) Flexural strength
(2) Thickness
(3) Smoothness
(4) Grade
(5) Edge slump
(6) Dowel bar alignment

Flexural strength and thickness shall be evaluated for acceptance on a lot basis using the method of estimating percentage of material within specification limits (PWL). Acceptance using PWL considers the variability (standard deviation) of the material and the testing procedures, as well as the average (mean) value of the test results to calculate the percentage of material that is above the lower specification tolerance limit (L).

Acceptance for flexural strength will be based on the criteria contained in accordance with paragraph 501-5.2e(1). Acceptance for thickness will be based on the criteria contained in paragraph 501-5.2e(2). Acceptance for smoothness will be based on the criteria contained in paragraph 501-5.2e(3). Acceptance for grade will be based on the criteria contained in paragraph 501-5.2e(4).

The Engineer may at any time, not withstanding previous plant acceptance, reject and require the Contractor to dispose of any batch of concrete mixture which is rendered unfit for use due to contamination, segregation, or improper slump. Such rejection may be based on only visual inspection. In the event of such rejection, the Contractor may take a representative sample of the rejected material in the presence of the Engineer, and if it can be demonstrated in the laboratory, in the presence of the Engineer, that such material was erroneously rejected, payment will be made for the material at the contract unit price.

b. Flexural Strength. Acceptance of each lot of in-place pavement for flexural strength shall be based on PWL. The Contractor shall target production quality to achieve 90 PWL or higher.

* * * *

Lower Specification Tolerance Limit (L)

Flexural Strength	0.93 × strength specified in paragraph 501-3.1
Thickness	Lot Plan Thickness in inches – 0.50 inches

* * * *

In addition to the 16-foot straight edge, the Contractor shall furnish a 25' wheel base California type profilograph and competent operator to be used to measure longitudinal pavement surface deviations. The profilograph shall be operated under the supervision of the Engineer and in accordance with the manufacturer's instructions. The profilograph shall be operated at a speed no greater than a normal walk. Original profilograms for the appropriate locations interpreted in accordance with ASTM E 1274 shall be furnished to the Engineer. The profilograms shall be recorded on a scale of one inch equal to 25 feet longitudinally and one inch equal to one inch or full scale vertically.

(a) The surface of Runway and Taxiway pavements of continuous placement of 50 feet or more shall be tested and evaluated as described herein. Two passes shall be made in each paving lane greater than 20 feet in width; each pass shall be six feet from and parallel with the centerline of the paving lane. The average of the two passes shall be considered as the profilograph result for the paving lane. For paving lanes less than 20 feet in width, one pass along the centerline shall be required. Tests shall be run the next working day following concrete placement. Each trace shall be completely labeled to show paving lane, wheel pass, and stationing.

(b) The Contractor shall furnish paving equipment and employ methods that produce a riding surface for each section of pavement having an average profile index meeting the requirements of paragraph 8.1c. A typical subsection will be considered to be the width of the paving lane and 1/10 mile long. The profile index will be determined in accordance with ASTM E 1274 using a 0.2-inch blanking band. Within each 1/10th mile subsection, all areas represented by high points having a deviation in excess of 0.4 inch in 25 feet or less shall be removed by the contractor using an approved grinding device or a device consisting of multiple diamond blades. The use of a bush hammer or other impact devices will not be permitted. After removing all individual deviations in excess of 0.4 inch, additional corrective work shall be performed if necessary to achieve the required ride quality. All corrective work shall be completed prior to determination of pavement thickness.

(c) On those pavement subsections where corrections were necessary, second profilograph runs will be performed to verify that the corrections have produced an average profile index of 15 inches per mile or less. If the initial average profile index was less than 15, only those areas representing greater than 0.4-inch deviation will be re-profiled for correction verification.

(d) When the average profile index does not exceed _____ inches per mile, payment will be made for that section at the contract unit price for the completed pavement. When the average profile index exceeds _____ inches per mile, but does not exceed fifteen inches per mile, the Contractor may elect to accept a contract unit price adjustment in lieu of reducing the profile index.

*** * * \

(g) Any corrective work required shall be performed prior to joint sealing and grooving operations.

(h) All cost necessary to provide the profilograph and related to furnishing the appropriate profilograms as required in this provision are incidental to concrete pavement construction and no direct compensation will be made therefore.

* * * *

achieve the quality. All corrective work shall be completed prior to determination of pavement thickness.

(c) On those pavement subsections where corrections were necessary, second profilograph runs will be performed to verify that the corrections have produced an average profile index of 15 inches per mile or less. If the initial average profile index was less than 15, only those areas representing greater than 0.4 inch deviation will be re-profiled for correction verification.

(d) When the average profile index does not exceed ____ inches per mile, payment will be made for that section at the contract unit price for the completed pavement. When the average profile index exceeds ____ inches per mile, but does not exceed fifteen inches per mile, the Contractor may elect to accept a contract unit price adjustment in lieu of reducing the profile index.

*****

(6) Dowel Bar Alignment. Dowel bars and assemblies shall be checked for position and alignment. The maximum permissible tolerance on dowel bar alignment in each plane, horizontal and vertical, shall not exceed 2 percent or 1/4 inch per foot (20 mm per meter) of a dowel bar. Vertical alignment of dowels shall be measured parallel to the designed top surface of the pavement, except for those across the crown or other grade change joints. Dowels across crowns and other joints at grade changes, shall be measured to a level surface. Horizontal alignment shall be checked perpendicular to the joint edge.

f. Removal and Replacement of Concrete. Any area or section of concrete that is removed and replaced shall be removed and replaced back to planned joints. The Contractor shall replace damaged dowels and the requirements for doweled longitudinal construction joints in paragraph 501-4.10 shall apply to all contraction joints exposed by concrete removal.

CONTRACTOR QUALITY CONTROL

501-6.1 QUALITY CONTROL PROGRAM. The Contractor shall develop a Quality Control Program in accordance with Section 100 of the General Provisions. The program shall address all elements that effect the quality of the pavement including but not limited to:

a. Mix Design	**e.** Proportioning	**i.** Dowel Placement and Alignment
b. Aggregate Gradation	**f.** Mixing and Transportation	**j.** Flexural or Compressive Strength
c. Quality of Materials	**g.** Placing and Consolidation	**k.** Finishing and Curing
d. Stockpile Management	**h.** Joints	**l.** Surface Smoothness

* *

When the design requires paving an area less than 600 square yards (500 square meters), the Engineer may request modification to this requirement.

* *

501-6.2 QUALITY CONTROL TESTING. The Contractor shall perform all quality control tests necessary to control the production and construction processes applicable to this specification and as set forth in the Quality Control Program. The testing program shall include, but not necessarily be limited to, tests for aggregate gradation, aggregate moisture content, slump, and air content.

A Quality Control Testing Plan shall be developed as part of the Quality Control Program.

a. Fine Aggregate.

(1) Gradation. A sieve analysis shall be made at least twice daily in accordance with ASTM C 136 from randomly sampled material taken from the discharge gate of storage bins or from the conveyor belt.

(2) Moisture Content. If an electric moisture meter is used, at least two direct measurements of moisture content shall be made per week to check the calibration. If direct measurements are made in lieu of using an electric meter, two tests shall be made per day. Tests shall be made in accordance with ASTM C 70 or ASTM C 566.

b. Coarse Aggregate.

(1) Gradation. A sieve analysis shall be made at least twice daily for each size of aggregate. Tests shall be made in accordance with ASTM C 136 from randomly sampled material taken from the discharge gate of storage bins or from the conveyor belt.

(2) Moisture Content. If an electric moisture meter is used, at least two direct measurements of moisture content shall be made per week to check the calibration. If direct measurements are made in lieu of using an electric meter, two tests shall be made per day. Tests shall be made in accordance with ASTM C 566.

c. Slump. Four slump tests shall be performed for each lot of material produced in accordance with the lot size defined in Section 501-5.1. One test shall be made for each sublot. Slump tests shall be performed in accordance with ASTM C 143 from material randomly sampled from material discharged from trucks at the paving site. Material samples shall be taken in accordance with ASTM C 172.

d. Air Content. Four air content tests, shall be performed for each lot of material produced in accordance with the lot size defined in Section 501-5.1. One test shall be made for each sublot. Air content tests shall be performed in accordance with ASTM C 231 for gravel and stone coarse aggregate and ASTM C 173 for slag or other porous coarse aggregate, from material randomly sampled from trucks at the paving site. Material samples shall be taken in accordance with ASTM C 172.

e. Four unit weight and yield tests shall be made in accordance with ASTM C 138. The samples shall be taken in accordance with ASTM C 172 and at the same time as the air content tests.

501-6.3 CONTROL CHARTS. The Contractor shall maintain linear control charts for fine and coarse aggregate gradation, slump, and air content.

Control charts shall be posted in a location satisfactory to the Engineer and shall be kept up to date at all times. As a minimum, the control charts shall identify the project number, the contract item number, the test number, each test parameter, the Action and suspension Limits, or Specification limits, applicable to each test parameter, and the Contractor's test results. The Contractor shall use the control charts as part of a process control system for identifying potential problems and assignable causes before they occur. If the Contractor's projected data during production indicates a potential problem and the Contractor is not taking satisfactory corrective action, the Engineer may halt production or acceptance of the material.

a. Fine and Coarse Aggregate Gradation. The Contractor shall record the running average of the last five gradation tests for each control sieve on linear control charts. Specification limits contained in Tables 1 and 2 shall be superimposed on the Control Chart for job control.

b. Slump and Air Content. The Contractor shall maintain linear control charts both for individual measurements and range (i.e. difference between highest and lowest measurements) for slump and air content in accordance with the following Action and Suspension Limits.

CONTROL CHART LIMITS			
Control Parameter	Individual Measurements		Range Suspension Limit
	Action Limit	Suspension Limit	
Slip Form:			
Slump	+0 to -1 inch (0-25mm)	+0.5 to -1.5 inch (13-38mm)	+/- 1.5 inch (38 mm)
Air Content	+/- 1.2%	+/- 1.8%	+/- 2.5%
Fixed Form			
Slump	+ 0.5 to -1 inch (13-25mm)	+1 to -1.5 inch (25-38mm)	+/- 1.5 inch (38mm)
Air Content	+/- 1.2%	+/- 1.8%	+/- 2.5%

The individual measurement control charts shall use the mix design target values as indicators of central tendency.

501-6.4 CORRECTIVE ACTION. The Contractor Quality Control Program shall indicate that appropriate action shall be taken when the process is believed to be out of control. The Contractor Quality Control Program shall detail what action will be taken to bring the process into control and shall contain sets of rules to gauge when a process is out of control. As a minimum, a process shall be deemed out of control and corrective action taken if any one of the following conditions exists.

a. Fine and Coarse Aggregate Gradation. When two consecutive averages of five tests are outside of the Tables 1 or 2 specification limits, immediate steps, including a halt to production, shall be taken to correct the grading.

b. Fine and Coarse Aggregate Moisture Content. Whenever the moisture content of the fine or coarse aggregate changes by more than 0.5 percent, the scale settings for the aggregate batcher(s) and water batcher shall be adjusted.

c. Slump. The Contractor shall halt production and make appropriate adjustments whenever:

(1) one point falls outside the Suspension Limit line for individual measurements or range; or
(2) two points in a row fall outside the Action Limit line for individual measurements.

d. Air Content. The Contractor shall halt production and adjust the amount of air-entraining admixture whenever:

(1) one point falls outside the Suspension Limit line for individual measurements or range; or
(2) two points in a row fall outside the Action Limit line for individual measurements.

Whenever a point falls outside the Action Limits line, the air-entraining admixture dispenser shall be calibrated to ensure that it is operating correctly and with good reproducibility.

METHOD OF MEASUREMENT

501-7.1 Portland cement concrete pavement shall be measured by the number of **[cubic yards (cubic meters)] [square yards (square meters)]** of either plain or reinforced pavement as specified in-place, completed and accepted. Saw-cut grooving shall be measured by the number of square yards (square meters) of saw-cut grooving as specified in-place, completed and accepted.

BASIS OF PAYMENT

501-8.1 PAYMENT. Payment for accepted concrete pavement shall be made at the contract unit price **[per cubic yard (cubic meter)] [per square yard (square meter)]** adjusted in accordance with paragraph 501-8.1a, subject to the limitation that:

The total project payment for concrete pavement shall not exceed **[ ]** percent of the product of the contract unit price and the total number of **[cubic yards (cubic meters)] [square yards (square meters**)] of concrete pavement used in the accepted work (See Note 2 under Table 3).

Payment shall be full compensation for all labor, materials, tools, equipment, and incidentals required to complete the work as specified herein and on the drawings, except for saw-cut grooving.

* * * *

thickness is 100 percent or higher. The lot pay factor shall be the lower of the two values when calculations for both flexural strength and thickness are less than 100 percent .

TABLE 3. PRICE ADJUSTMENT SCHEDULE [1]

Percentage of Material Within Specification Limits (PWL)	Lot Pay Factor (Percent of Contract Unit Price)
96 – 100	106
90 – 95	PWL + 10
75 – 90	0.5PWL + 55
55 – 74	1.4PWL – 12
Below 55	Reject [2]

[1] ALTHOUGH IT IS THEORETICALLY POSSIBLE TO ACHIEVE A PAY FACTOR OF 106 PERCENT FOR EACH LOT, ACTUAL PAYMENT IN EXCESS OF 100 PERCENT SHALL BE SUBJECT TO THE TOTAL PROJECT PAYMENT LIMITATION SPECIFIED IN PARAGRAPH 501-8.1.

[2] The lot shall be removed and replaced. However, the Engineer may decide to allow the rejected lot to remain. In that case, if the Engineer and Contractor agree in writing that the lot shall not be removed, it shall be paid for at 50 percent of the contract unit price AND THE TOTAL PROJECT PAYMENT LIMITATION SHALL BE REDUCED BY THE AMOUNT WITHHELD FOR THE REJECTED LOT.

For each lot accepted, the adjusted contract unit price shall be the product of the lot pay factor for the lot and the contract unit price. Payment shall be subject to the total project payment limitation specified in paragraph 501-8.1. Payment in excess of 100 percent for accepted lots of concrete pavement shall be used to offset payment for accepted lots of concrete pavement that achieve a lot pay factor less than 100 percent.

b. Payment. Payment shall be made under:

Item P-501-8.1a Portland Cement Concrete Pavement—**[per cubic yard (cubic meter)] [per square yard (square meter)]**

c. Basis of adjusted payment for Smoothness. Price adjustment for pavement smoothness will apply to the total area of concrete within a section of pavement and shall be applied in accordance the following equation and schedule:

(Sq yds in section) x (original unit price per sq yds) x PFm =
= reduction in payment for area within section

Average Profile Index (Inches per mile) pavement strength rating			Contract Unit Price Adjustment PFm
over 30,000 lb	30,000 lb or less	Short Sections	
0 - 7	0 - 10	0 - 15	0.00
7.1 - 9	10.1 - 11	15.1 - 16	0.02
9.1 - 11	11.1 - 12	16.1 - 17	0.04
11.1 - 13	12.1 - 13	17.1 - 18	0.06
13.1 - 14	13.1 - 14	18.1 - 20	0.08
14.1 - 15	14.1 - 15	20.1 - 22	0.10
15.1 & up	15.1 & up	22.1 & up	corrective work required

501-8.2 PAYMENT FOR SAW-CUT GROOVING. Payment for saw-cut grooving shall be made at the contract unit price per square yard (square meter) for saw-cut grooving.

* * * *

ASTM C 1260	Potential Alkali Reactivity of Aggregates (Mortar-Bar Method)
ASTM D 3665	Random Sampling of Paving Materials
ASTM D 4791	Test Method for Flat or Elongated Particles in Coarse Aggregate
ASTM E 178	Practice for Dealing With Outlying Observations
ASTM E 1274	Test for Measuring Pavement Roughness Using a Profilograph
AASHTO T 26	Quality of Water to be Used in Concrete

MATERIAL REQUIREMENTS

ASTM A 184	Specification for Fabricated Deformed Steel Bar Mats for Concrete Reinforcement
ASTM A 185	Specification for Steel Welded Wire Fabric, Plain, for Concrete Reinforcement
ASTM A 497	Specification for Steel Welded Wire Fabric, Deformed, for Concrete Reinforcement
ASTM A 615	Specification for Deformed and Plain Billet-Steel Bars for Concrete Reinforcement
ASTM A 704	Specification for Welded Steel Plain Bar or Rod Mats for Concrete Reinforcement
ASTM A 714	Specification for High-Strength Low-Alloy Welded and Seamless Steel Pipe
ASTM A 996	Specification for Rail-Steel and Axle Steel Deformed Bars for Concrete Reinforcement
ASTM C 33	Specification for Concrete Aggregates
ASTM C 94	Specification for Ready-Mixed Concrete
ASTM C 150	Specification for Portland Cement
ASTM C 171	Specification for Sheet Materials for Curing Concrete
ASTM C 260	Specification for Air-Entraining Admixtures for Concrete
ASTM C 309	Specification for Liquid Membrane-Forming Compounds for Curing Concrete
ASTM C 494	Specification for Chemical Admixtures for Concrete
ASTM C 595	Specification for Blended Hydraulic Cements
ASTM C 618	Specification for Coal Fly Ash and Raw or Calcined Natural Pozzolan for Use as a Mineral Admixture in Concrete
ASTM C 881	Specification for Epoxy-Resin Base Bonding System for Concrete
ASTM C 989	Specification for Ground Granulated Blast-Furnace Slag for Use in Concrete and Mortars
ASTM D 1751	Specification for Preformed Expansion Joint Filler for Concrete Paving and Structural Construction (Nonextruding and Resilient Bituminous Types)
ASTM D 1752	Specification for Preformed Sponge Rubber and Cork Expansion Joint Fillers for Concrete Paving And Structural Construction

ACI 305R	Hot Weather Concreting
ACI 306R	Cold Weather Concreting
ACI 309	Guide for Consolidation of Concrete

MIL-DTL-24441/20a (1999)_Paint, Epoxy-Polyamide, Green Primer, Formula 150, Type III
Department of Defense

END ITEM P-501

PART VII – MISCELLANEOUS
ITEM P-602 BITUMINOUS PRIME COAT

DESCRIPTION

602-1.1 This item shall consist of an application of bituminous material on the prepared base course in accordance with these specifications and in reasonably close conformity to the lines shown on the plans.

MATERIALS

602-2.1 BITUMINOUS MATERIAL. The types, grades, controlling specifications, and application temperatures for the bituminous materials are given in Table 1. The Engineer shall designate the specific material to be used.

TABLE 1. BITUMINOUS MATERIAL

		Application Temperatures \1\	
Type and Grade	Specification	Deg. F	Deg. C
Emulsified Asphalt			
SS-1, SS-1h	ASTM D 977	70-160	20-70
MS-2, HFMS-1	ASTM D 977	70-160	20-70
CSS-1, CSS-1h	ASTM D 2397	70-160	20-70
CMS-2	ASTM D 2397	70-160	20-70
Cutback Asphalt			
RC-30	ASTM D 2028	80+	30+
RC-70	ASTM D 2028	120+	50+
RC-250	ASTM D 2028	165+	75+

\1\ The maximum temperature for cutback asphalt shall be that at which fogging occurs.

CONSTRUCTION METHODS

602-3.1 WEATHER LIMITATIONS. The prime coat shall be applied only when the existing surface is dry or contains sufficient moisture to get uniform distribution of the bituminous material, when the atmospheric temperature is above 60°F (15°C), and when the weather is not foggy or rainy. The temperature requirements may be waived, but only when so directed by the Engineer.

602-3.2 EQUIPMENT. The equipment used by the Contractor shall include a self-powered pressure bituminous material distributor and equipment for heating bituminous material.

The distributor shall be designed, equipped, maintained, and operated so that bituminous material at even heat may be applied uniformly on variable widths of surface at the specified rate. The allowable variation from the specified rate shall not exceed 10 percent. Distributor equipment shall include a tachometer, pressure gages, volume-measuring devices or a calibrated tank, and a thermometer for measuring temperatures of tank contents. The distributor shall be self-powered and shall be equipped with a power unit for the pump and full circulation spray bars adjustable laterally and vertically.

If the distributor is not equipped with an operable quick shut off valve, the prime operations shall be started and stopped on building power. The Contractor shall remove blotting sand prior to asphalt concrete lay down operations at no additional expense to the owner.

A power broom and/or blower shall be provided for any required cleaning of the surface to be treated.

602-3.3 APPLICATION OF BITUMINOUS MATERIAL. Immediately before applying the prime coat, the full width of the surface to be primed shall be swept with a power broom to remove all loose dirt and other objectionable material.

The bituminous material including solvent shall be uniformly applied with a bituminous distributor at the rate of 0.25 to 0.50 gallons per square yard (1.20 to 2.40 liters per square meter) depending on the base course surface texture. The type of bituminous material and application rate shall be approved by the Engineer prior to application.

Following the application, the primed surface shall be allowed to dry not less than 48 hours without being disturbed or for such additional time as may be necessary to permit the drying out of the prime coat until it will not be picked up by traffic or equipment. This period shall be determined by the Engineer. The surface shall then be maintained by the Contractor until the surfacing has been placed. Suitable precautions shall be taken by the Contractor to protect the primed surface against damage during this interval, including supplying and spreading any sand necessary to blot up excess bituminous material.

602-3.4 BITUMINOUS MATERIAL CONTRACTOR'S RESPONSIBILITY. Samples of the bituminous materials that the Contractor proposes to use, together with a statement as to their source and character, must be submitted and approved before use of such material begins. The Contractor shall require the manufacturer or producer of the bituminous materials to furnish material subject to this and all other pertinent requirements of the contract. Only satisfactory materials, so demonstrated by service tests, shall be acceptable.

The Contractor shall furnish vendor's certified test reports for each carload, or equivalent, of bituminous material shipped to the project. The test reports shall contain all the data required by the applicable specification. If the Contractor applies the prime material prior to receipt of the tests reports, payment for the material shall be withheld until they are received. If the material does not pass the specifications it shall be replaced at the contractor's expense. The report shall be delivered to the Engineer before permission is granted for use of the material. The furnishing of the vendor's certified test report for the bituminous material shall not be interpreted as basis for final acceptance. All such test reports shall be subject to verification by testing samples of materials received for use on the project.

602-3.5 FREIGHT AND WEIGH BILLS. Before the final estimate is allowed, the Contractor shall file with the Engineer receipted bills when railroad shipments are made, and certified weigh bills when materials are received in any other manner, of the bituminous materials actually used in the construction covered by the contract. The Contractor shall not remove bituminous material from the tank car or storage tank until the initial outage and temperature measurements have been taken by the Engineer, nor shall the car or tank be released until the final outage has been taken by the Engineer.

Copies of freight bills and weigh bills shall be furnished to the Engineer during the progress of the work.

METHOD OF MEASUREMENT

602-4.1 The bituminous material for prime coat shall be measured by the **[gallon (liter)][ton(kg)]** . Volume shall be corrected to the volume at 60°F (15°C) in accordance with ASTM D 1250 for cutback asphalt, and Table IV-3 of The Asphalt Institute's Manual MS-6 for emulsified asphalt.

BASIS OF PAYMENT

602-5.1 Payment shall be made at the contract unit price per **[gallon (liter)][ton (kg)]** for bituminous prime coat. This price shall be full compensation for furnishing all materials and for all preparation, delivering, and applying the materials, and for all labor, equipment, tools, and incidentals necessary to complete this item.

Payment will be made under:

Item P-602-5.1 Bituminous Prime Coat—per **[gallon (liter)][ton (kg)]**

MATERIAL REQUIREMENTS

ASTM D 977	Emulsified Asphalt
ASTM D 2028	Cutback Asphalt (Rapid Curing Type)
ASTM D 2397	Cationic Emulsified Asphalt

TESTING REQUIREMENTS

ASTM D 1250	Petroleum Measurement Tables
Asphalt Institute Manual MS-6 Table IV-3	Asphalt Pocketbook of Useful Information (Temperature-Volume Corrections for Emulsified Asphalts)

END OF ITEM P-602

Intentionally Left Blank

ITEM P-603 BITUMINOUS TACK COAT

DESCRIPTION

603-1.1 This item shall consist of preparing and treating a bituminous or concrete surface with bituminous material in accordance with these specifications and in reasonably close conformity to the lines shown on the plans.

MATERIALS

603-2.1 BITUMINOUS MATERIALS. The bituminous material shall be either cutback asphalt, emulsified asphalt, or tar and shall conform to the requirements of Table 1. The type, grade, controlling specification, and application temperature of bituminous material to be used shall be specified by the Engineer.

TABLE 1. BITUMINOUS MATERIAL

Type and Grade	Specification	Application Temperature Deg. F	Deg. C
Emulsified Asphalt			
SS-1, SS-1h	ASTM D 977	75-130	25-55
CSS-1, CSS-1h	ASTM D 2397	75-130	25-55
Cutback Asphalt			
RC-70	ASTM D 2028	120-160	50-70
Tar			
RTCB 5, RTCB 6	AASHTO M 52	60-120	15-50

CONSTRUCTION METHODS

603-3.1 WEATHER LIMITATIONS. The tack coat shall be applied only when the existing surface is dry and the atmospheric temperature is above 60°F (15°C). The temperature requirements may be waived, but only when so directed by the Engineer.

603-3.2 EQUIPMENT. The Contractor shall provide equipment for heating and applying the bituminous material.

The distributor shall be designed, equipped, maintained, and operated so that bituminous material at even heat may be applied uniformly on variable widths of surface at the specified rate. The allowable variation from the specified rate shall not exceed 10 percent. Distributor equipment shall include a tachometer, pressure gages, volume-measuring devices or a calibrated tank, and a thermometer for measuring temperatures of tank contents. The distributor shall be self-powered and shall be equipped with a power unit for the pump and full circulation spray bars adjustable laterally and vertically.

If the distributor is not equipped with an operable quick shut off valve, the tack operations shall be started and stopped on building paper. The Contractor shall remove blotting sand prior to asphalt concrete lay down operations at no additional expense to the owner.

A power broom and/or blower shall be provided for any required cleaning of the surface to be treated.

603-3.3 APPLICATION OF BITUMINOUS MATERIAL. Immediately before applying the tack coat, the full width of surface to be treated shall be swept with a power broom and/or airblast to remove all loose dirt and other objectionable material.

Emulsified asphalt shall be diluted by the addition of water when directed by the Engineer and shall be applied a sufficient time in advance of the paver to ensure that all water has evaporated before any of the overlying mixture is placed on the tacked surface.

The bituminous material including vehicle or solvent shall be uniformly applied with a bituminous distributor at the rate of 0.05 to 0.15 gallons per square yard (0.24 to 0.72 liters per square meter) depending on the condition of the existing surface. The type of bituminous material and application rate shall be approved by the Engineer prior to application.

Following the application, the surface shall be allowed to cure without being disturbed for such period of time as may be necessary to permit drying out and setting of the tack coat. This period shall be determined by the Engineer. The surface shall then be maintained by the Contractor until the next course has been placed. Suitable precautions shall be taken by the Contractor to protect the surface against damage during this interval.

603-3.4 BITUMINOUS MATERIAL CONTRACTOR'S RESPONSIBILITY. Samples of the bituminous material that the Contractor proposes to use, together with a statement as to its source and character, must be submitted and approved before use of such material begins. The Contractor shall require the manufacturer or producer of the bituminous material to furnish material subject to this and all other pertinent requirements of the contract. Only satisfactory materials so demonstrated by service tests, shall be acceptable.

The Contractor shall furnish the vendor's certified test reports for each carload, or equivalent, of bituminous material shipped to the project. The tests reports shall contain all the data required by the applicable specification. If the Contractor applies the material prior to receipt of the tests reports, payment for the material shall be withheld until they are received. If the material does not pass the specifications it shall be replaced at the contractor's expense. The report shall be delivered to the Engineer before permission is granted for use of the material. The furnishing of the vendor's certified test report for the bituminous material shall not be interpreted as a basis for final acceptance. All such test reports shall be subject to verification by testing samples of material received for use on the project.

603-3.5 FREIGHT AND WEIGH BILLS. Before the final estimate is allowed, the Contractor shall file with the Engineer receipted bills when railroad shipments are made, and certified weigh bills when materials are received in any other manner, of the bituminous materials actually used in the construction covered by the contract. The Contractor shall not remove bituminous material from the tank car or storage tank until the initial outage and temperature measurements have been taken by the Engineer, nor shall the car or tank be released until the final outage has been taken by the Engineer. Copies of freight bills and weigh bills shall be furnished to the Engineer during the progress of the work.

METHOD OF MEASUREMENT

603-4.1 The bituminous material for tack coat shall be measured by the **[gallon (liter)] [ton (kg)]**. Volume shall be corrected to the volume at 60°F (15°C) in accordance with ASTM D 1250 for cutback asphalt, ASTM D 633 for tar, and Table

603-4.2 IV-3 of The Asphalt Institute's Manual MS-6 for emulsified asphalt. Water added to emulsified asphalt will not be measured for payment.

BASIS OF PAYMENT

603.5-1 Payment shall be made at the contract unit price per **[gallon (liter)] [ton (kg)]** of bituminous material. This price shall be full compensation for furnishing all materials, for all preparation, delivery, and application of these materials, and for all labor, equipment, tools, and incidentals necessary to complete the item.

Payment will be made under:

Item P-603-5.1 Bituminous Tack Coat—per **[gallon (liter)][ton (kg)]**

MATERIAL REQUIREMENTS

ASTM D 633	Volume Correction Table for Road Tar
ASTM D 977	Emulsified Asphalt
ASTM D 1250	Petroleum Measurement Tables
ASTM D 2028	Cutback Asphalt (Rapid-Curing Type)
ASTM D 2397	Cationic Emulsified Asphalt
Asphalt Institute Manual MS-6 Table IV-3	Asphalt Pocketbook of Useful Information (Temperature-Volume Corrections for Emulsified Asphalts)

END ITEM P-603

Intentionally Left Blank

* * * *

certification from the manufacturer that the seal selected is recommend for the installation involved on this project. No material will be allowed to be used until it has been approved.

* * * *

* * * *

until the test installation has been approved. If the trial section is approved, it may be incorporated into the permanent work and paid for at the contract unit prices per linear foot for sealing items scheduled. All other joints shall be sealed in the manner approved for sealing the trial joints.

604-4.3 PREPARATION OF JOINTS. Immediately before installation of the preformed joint seal, the joints shall be thoroughly cleaned to remove all laitance, filler, [old existing sealant,] foreign material and protrusions of hardened concrete from the sides and upper edges of the joint space to be sealed. Any irregularity in the joint face that would prevent uniform contact between the joint seal and the joint face shall be corrected by _____ prior to the installation of the joint seal.

* * * *

* * * *

f. The values for insertion in the blanks are based on the greatest tolerance limit variation for both seal width and saw cut width.

* * * *

temperatures lower than 35 degrees F. However, joints should be dry to obtain maximum cementing of the lubricant/adhesive to the concrete and manufacturers should be contacted for special instructions under cold conditions.

* * * *

604-5.1 QUALITY CONTROL PROVISIONS.

a. Equipment. The application equipment shall be inspected to assure uniform application of lubricant/adhesive to the sides of the preformed joint seal or the walls of the joint. If any equipment causes cutting, twisting, nicking, excessive stretching or compressing of the preformed seal, or improper application of the lubricant/adhesive, the operation shall be suspended until causes of the deficiencies are determined and corrected by the contractor.

b. Procedures.

(1) Quality control provisions shall be provided during the joint cleaning process to prevent or correct improper equipment and cleaning techniques that damage the concrete in any manner. Cleaned joints shall be approved by the Engineer prior to installation of the lubricant/adhesive and preformed joint seal.

(2) Conformance to stretching and compression limitations shall be determined by the engineer. After installation, the distance between the marks shall be measured on the pavement. If the stretching or compression exceeds the specified limit, the seal shall be removed and replaced with new joint seal at no additional cost to the owner. The seal shall be removed up to the last correct measurement. The seal shall be inspected a minimum of once per 100 feet of seal for compliance to the shrinkage or compression requirements. Measurements shall also be made as directed to determine conformance with depth and width installation requirements. All preformed seal that is not in conformance with specification requirements shall be removed and replaced with new joint seal at no additional cost to the owner.

c. Product. The joint sealing system (preformed seal and lubricant/adhesive) shall be inspected by the engineer for proper rate of cure and bonding to the concrete, cuts, twists, nicks, and other deficiencies. Seals exhibiting any defects, at any time prior to final acceptance of the project, shall be removed from the joint, wasted, and replaced in a satisfactory manner, as determined by the engineer.

METHOD OF MEASUREMENT

604-6.1 MEASUREMENT. The quantity of each sealing item to be paid for will be determined by actual measurement of the number of linear feet of in-place material that has been approved.

BASIS OF PAYMENT

604-7.1 PAYMENT. Payment will be made at the contract unit bid prices per linear foot for the sealing items scheduled. The unit bid prices shall include the cost of all labor, materials, the use of all equipment, and tools required to complete the work.

TESTING REQUIREMENTS

The publications listed below form a part of this specification to the extent referenced. The publications are referred to in this text by basic designation only.

U.S. ARMY CORPS OF ENGINEERS

CRD C 548 Standard Specification for Jet-Fuel and Heat Resistant Preformed Polychloroprene Elastomeric Joint Seals for Rigid Pavements

AMERICAN SOCIETY FOR TESTING AND MATERIALS (ASTM)

ASTM D 2628 Preformed Polychloroprene Elastomeric Joint Seals for Concrete Pavements

ASTM D 2835 Lubricant for Installation of Preformed Compression Seals in Concrete Pavements

END ITEM P-604

Intentionally Left Blank

ITEM P-605 JOINT SEALING FILLER

DESCRIPTION

605-1.1 This item shall consist of providing and installing a resilient and adhesive joint sealing filler capable of effectively sealing joints and cracks in pavements.

MATERIALS

605-2.1 JOINT SEALERS. Joint sealing materials shall meet the requirements of **[ ]**.

[Each lot or batch of sealing compound shall be delivered to the jobsite in the manufacturer's original sealed container. Each container shall be marked with the manufacturer's name, batch or lot number, the safe heating temperature, and shall be accompanied by the manufacturer's certification stating that the compound meets the requirements of this specification.]

* * * *

* * * *

compressible without extruding the sealant, and should recover to maintain contact with the joint faces when the joint is open.

Jute, paper, or other moisture absorbing material shall not be used for the backing material. The backing material shall be rubber, butyl rubber, or other approved material that will not react with the joint sealer and will not form a gas when the hot joint sealer is applied.

* * * *

ASTM D 3569	Joint Sealant, Hot-Applied, Elastometric, Jet-Fuel-Resistant Type, for Portland Cement Concrete Pavements
ASTM D 3581	Joint Sealant, Hot-Applied, Jet-Fuel-Resistant Type, for Portland Cement Concrete and Tar-Concrete Pavements
ASTM D 5893	Standard Specifications for Cold Applied, Single Component, Chemically Curing Silicone Joint Sealant for Portland Cement Concrete Pavements
ASTM D 6690	Joint and Crack Sealants, Hot-Applied, for Concrete and Asphalt Pavements
FED SPEC SS-S-200E(2)	Sealants, Joint, Two-Component, Jet-Blast Resistant, Cold Applied

END ITEM P-605

ITEM P-606 ADHESIVE COMPOUNDS, TWO-COMPONENT FOR SEALING WIRE AND LIGHTS IN PAVEMENT

DESCRIPTION

606-1.1. This specification covers two types of material; a liquid suitable for sealing electrical wire in saw cuts in pavement and for sealing light fixtures or bases in pavement, and a paste suitable for embedding light fixtures in the pavement. Both types of material are two-component filled formulas with the characteristics specified in paragraph 606-2.4. Materials supplied for use with bituminous concrete pavements must be formulated so they are compatible with the bituminous concrete.

* * * *

TABLE 1. PROPERTY REQUIREMENTS

Physical or Electrical Property	Minimum	Maximum	ASTM Method
Tensile			
Portland Cement Concrete	1,000 psi (70 kg/sq.cm)		D 638
Bituminous Concrete	500 psi (35 kg/sq.cm)		
Elongation			
Portland Cement Concrete		\1\	D 638
Bituminous Concrete	50%		D 638
Coef. of cub. exp. cu. cm/cu. cm/degree C	0.00090	0.00120	D 1168
Coef. of lin. exp. cm/cm/degree C	0.00030	0.00040	D 1168
Dielectric strength, short time test	350 volts/mil.		D 149
Arc resistance	125 secs.		D 495
Adhesion to steel	1,000 psi (70 kg/sq.cm)		
Adhesion to portland cement concrete	200 psi (14 kg/sq.cm)		
Adhesion to asphalt concrete	(no test available)		

\1\ 20% or more (without filler) for formulations to be supplied for areas subject to freezing.

606-3.4 TEST FOR ARC RESISTANCE. Test for arc resistance shall be conducted in accordance with ASTM D 495 for sealing compounds to be furnished for sealing electrical wires in pavement.

606-3.5 TEST FOR ADHESION TO STEEL. The ends of two smooth, clean, steel specimens of convenient size (1 inch by 1 inch by 6 inches) (25 by 25 by 150 mm) would be satisfactory when bonded together with adhesive mixture and allowed to cure at room temperature for a period of time to meet formulation requirements and then tested to failure on a Riehle (or similar) tensile tester. The thickness of adhesive to be tested shall be 1/4 inch (6 mm).

606-3.6 ADHESION TO PORTLAND CEMENT CONCRETE

a. Concrete Test Block Preparation. The aggregate grading shall be as shown in Table 2.

The coarse aggregate shall consist of crushed rock having a minimum of 75% of the particles with at least one fractured face and having a water absorption of not more than 1.5%. The fine aggregate shall consist of crushed sand manufactured from the same parent rock as the coarse aggregate. The concrete shall have a water-cement ratio of 5.5 gallons (21 liters) of water per bag of cement, a cement factor of 6, plus or minus 0.5, bags of cement per cubic yard (0.76 cubic meter) of concrete, and a slump of 2-1/2 inches, plus or minus 1/2 inch (60 mm plus or minus 12 mm). The ratio of fine aggregate to total aggregate shall be approximately 40% by solid volume. The air content shall be 5.0%, plus or minus 0.5%, and it shall be obtained by the addition to the batch of an air-entraining admixture such as vinsol resin. The mold shall be of metal and shall be provided with a metal base plate. Means shall be provided for securing the base plate to the mold. The assembled mold and base plate shall be watertight and shall be oiled with mineral oil before use. The inside measurement of the mold shall be such that several 1-inch by

2-inch by 3-inch (25 by 50 by 75 mm) test blocks can be cut from the specimen with a concrete saw having a diamond blade. The concrete shall be prepared and cured in accordance with ASTM C 192.

TABLE 2. AGGREGATE FOR BOND TEST BLOCKS

Type	Sieve Size	Percent Passing
Coarse Aggregate	3/4 inch (19.0 mm)	97 to 100
	1/2 inch (12.5 mm)	63 to 69
	3/8 inch (9.5 mm)	30 to 36
	No. 4 (4.75 mm)	0 to 3
Fine Aggregate	No. 4 (4.75 mm)	100
	No. 8 (2.36 mm)	82 to 88
	No. 16 (1.18 mm)	60 to 70
	No. 30 (600 micro-m)	40 to 50
	No. 50 (300 micro-m)	16 to 26
	No. 100 (150 micro-m)	5 to 9

b. Bond Test. Prior to use, oven-dry the test blocks to constant weight at a temperature of 220 to 230°F (104°C to 110°C), cool to room temperature, 73.4 plus or minus 3°F (23°C plus or minus 1.6°C), in a desiccator, and clean the surface of the blocks of film or powder by vigorous brushing with a stiff-bristled fiber brush. Two test blocks shall be bonded together on the 1-inch by 3-inch (25 by 75 mm) sawed face with the adhesive mixture and allowed to cure at room temperature for a period of time to meet formulation requirements and then tested to failure in a Riehle (or similar) tensile tester. The thickness of the adhesive to be tested shall be 1/4 inch (6 mm).

606-3.7 COMPATIBILITY WITH ASPHALT CONCRETE. Test for compatibility with asphalt in accordance with ASTM D 5329.

606-3.8 ADHESIVE COMPOUNDS - CONTRACTOR'S RESPONSIBILITY. The Contractor shall furnish the vendor's certified test reports for each batch of material delivered to the project. The report shall certify that the material meets specification requirements and is suitable for use with **[portland cement concrete] [bituminous concrete]** pavements. The report shall be delivered to the Engineer before permission is granted for use of the material. In addition the Contractor shall obtain a statement from the supplier or manufacturer that guarantees the material for one year. The supplier or manufacturer shall furnish evidence that the material has performed satisfactorily on other projects.

606-3.9 APPLICATION. Adhesive shall be applied on a dry, clean surface, free of grease, dust, and other loose particles. The method of mixing and application shall be in strict accordance with the manufacturer's recommendations.

* * * *

no measurement will be made for direct payment of adhesive, as the cost of furnishing and installing shall be considered as a subsidiary obligation in the completion of the installation.

BASIS OF PAYMENT

606-5.1 Payment shall be made, where applicable, at the contract unit price per **[pound (kg)] [gallon (l)]** for the adhesive. This price shall be full compensation for furnishing all materials, and for all preparation, delivering, and application of these materials, and for all labor, equipment, tools, and incidentals necessary to complete the item.

Item P-606-5.1 Adhesive Compound - per [pound (kg)] [gallon (l)]

TESTING REQUIREMENTS

ASTM C 192 Making and Curing Concrete Compression and Flexure Test Specimens in the Laboratory.

ASTM D 149 Tests for Dielectric Breakdown Voltage and Dielectric Strength of Electrical Insulating Materials at Commercial Power Frequencies.

ASTM D 495 Test for High-Voltage, Low-Current, Dry Arc Resistance of Solid Electrical Insulation Materials

ASTM D 638 Test for Tensile Properties of Plastics

ASTM D 1168 Test for Hydrocarbon Waxes Used for Electrical Insulation

ASTM D 5329 Joint Sealants, Hot-poured, for Concrete and Asphalt Pavements

END OF ITEM P-606

ITEM P-609 SEAL COATS AND BITUMINOUS SURFACE TREATMENTS

DESCRIPTION

* * * *

MATERIALS

609-2.1 AGGREGATE MATERIALS. The aggregate material shall be either crushed stone, crushed gravel, or crushed slag. The cover material shall be screenings; sand may be used when specified.

If the material is to be crushed stone, it shall be manufactured from sound, hard, durable rock of accepted quality and crushed to specification size. All strata, streaks, and pockets of clay, dirt, sandstone, soft rock, or other unsuitable material accompanying the sound rock shall be discarded and not allowed to enter the crusher.

If the material is to be crushed gravel, it shall consist of hard, durable, fragments of stone or gravel of accepted quality and crushed to specification size. All strata, streaks, and pockets of sand, excessively fine gravel, clay, or other unsuitable material including all stones, rocks, and boulders of inferior quality shall be discarded and not allowed to enter the crusher. The crushing of the gravel shall result in a product in which the material retained on the separate No. 4, 3/8 inch, and 1/2 inch (4.75 mm, 9 mm, and 12 mm) sieves shall have at least 75% of particles with at least one fractured face.

Crushed slag shall be air-cooled, blast furnace slag, reasonably uniform in density and quality, and shall weigh not less than 70 pounds per cubic foot (1.12 mg/cubic meter) as determined by ASTM C 29.

The crushed aggregate shall not contain more than 8%, by weight, of elongated or flat pieces and shall be free from wood, roots, vegetable, organic, or other extraneous matter. The crushed coarse aggregate shall have a percentage of wear not more than 40 at 500 revolutions, as determined by ASTM C 131.

The aggregate shall show no evidence of disintegration or show a total loss greater than 12% when subjected to five cycles of the sodium sulphate accelerated soundness test specified in ASTM C 88.

The crushed aggregate for the applications shall meet the requirements for gradation given in Table 2 when tested in accordance with ASTM C 136.

TABLE 2. REQUIREMENTS FOR GRADATION OF AGGREGATE

Aggregate for first application	
Sieve Designation (square openings)	Percentage by Weight Passing Sieves
1 inch (25.0 mm)	100
3/4 inch (19.0 mm)	90-100
1/2 inch (12.5 mm)	20-55
3/8 inch (9.5 mm)	0-15
No. 4 (4.75 mm)	0-5
Aggregate for second application	
Sieve Designation (square openings)	Percentage by Weight Passing Sieves
1/2 inch (12.5 mm)	100
3/8 inch (9.5 mm)	85-100
No. 4 (4.75 mm)	10-30
No. 8 (2.36 mm)	0-10
No. 16 (1.18 mm)	0-5
Aggregate for third application	
Sieve Designation (square openings)	Percentage by Weight Passing Sieves
3/8 inch (9.5 mm)	100
1/4 inch (6.2 mm)	90-100
No. 4 (4.75 mm)	60-85
No. 8 (2.36 mm)	0-25
No. 16 (1.18 mm)	0-5
No. 200 (0.075 mm)	0-2

The gradations in the table represent the limits that shall determine suitability of aggregate for use for the specified applications from the sources of supply. The final gradations decided on, within the limits designated in the table, shall be uniformly graded from coarse to fine.

The cover aggregate used in the third application shall be a light-colored material whose color and reflectivity shall be approved by the Engineer.

The aggregate to be used shall show no evidence of stripping or swell when tested in accordance with AASHTO T 182. The use of antistrip agents for the control of stripping shall be used if necessary.

609-2.2 BITUMINOUS MATERIAL. The types, grades, controlling specifications, and application temperatures for the bituminous materials are shown in Table 3. The Engineer shall designate the specific material to be used.

TABLE 3. BITUMINOUS MATERIALS

Type and Grade	Specification	Spraying Temperature[1]	
		Deg. F	Deg. C
Asphalt Cement			
AC 2.5, AC-5	ASTM D 3381	275+	135+
AR-1000, 2000	ASTM D 3381	280+	140+
120-150, 200-300	ASTM D 946	270+	130+
Emulsified Asphalt			
RS-1	ASTM D 977	70-140	20-60
RS-2	ASTM D 977	125-175	50-80
MS-1, HFMS-1	ASTM D 977	70-160	20-70
CRS-1	ASTM D 2397	125-175	50-80
CRS-2	ASTM D 2397	125-175	50-80

[1] The maximum temperature for asphalt cements shall be below that at which fogging occurs.

CONSTRUCTION METHODS

609-3.1 WEATHER LIMITATIONS. Bituminous material shall be applied only when the existing surface is dry and the atmospheric temperature is above 60°F (15°C). No material shall be applied when rain is imminent or when dust or sand is blowing.

609-3.2 OPERATION OF PITS AND QUARRIES. The aggregate material shall be obtained from sources approved by the engineer. The Contractor shall make all necessary arrangements for obtaining the material, and all work involved in clearing and stripping pits or quarries and handling unsuitable material shall be performed by the Contractor at his/her own expense. The material in the pits shall be handled so that a uniform and satisfactory product shall be secured. Unless otherwise directed, pits shall be adequately drained and shall be left in a neat and presentable condition with all slopes dressed uniformly. Quarries shall be left as neat and presentable as practicable.

609-3.3 EQUIPMENT AND TOOLS. The Contractor shall furnish all equipment, tools, and machines necessary for the performance of the work.

a. Pressure Distributor. The distributor shall be designed, equipped, maintained, and operated so that bituminous material at even heat may be applied uniformly on variable widths of surface at the specified rate. The allowable variation from the specified rate shall not exceed 10 percent. Distributor equipment shall include a tachometer, pressure gages, volume-measuring devices or a calibrated tank, and a thermometer for measuring temperatures of tank contents. The distributor shall be self-powered and shall be equipped with a power unit for the pump and full circulation spray bars adjustable laterally and vertically.

b. Aggregate Spreader. The aggregate spreader shall be a self-propelled mechanical spreader or truck-attached mechanical spreader capable of uniformly distributing aggregate at the specified rates.

c. Roller. The roller shall be a pneumatic-tired roller with an effective rolling width of at least 60 inches (152 cm) and capable of exerting a minimum contact pressure of 40 pounds per square inch (280,000 newtons per square meter).

d. Power Broom. A power broom and/or blower shall be provided for removing loose material from the surface to be treated.

609-3.4 PREPARING UNDERLYING COURSE. The surface of the underlying course shall be prepared, shaped, and conditioned to a uniform grade and section, as shown on the plans and as specified. Loose dirt and other objectionable material shall be removed from the surface.

On those type of bases where a prime coat is required and specified, the prime shall be applied and satisfactorily cured before starting the bituminous surface treatment.

When specified, the Contractor shall be required to patch, with premixed material, any holes or other malformations deviating from the true cross section and grade. The premixed material shall be made of the bituminous material specified in the proposal or plans and prepared by the method as directed by the Engineer. All small patches shall be thoroughly hand tamped while the large patches shall be rolled with a power or pneumatic roller.

609-3.5 APPLICATION OF BITUMINOUS MATERIAL. Bituminous material shall be applied upon the properly prepared surface at the rate and temperature specified using a pressure distributor to obtain uniform distribution at all points. To insure proper drainage, the strips shall begin along the centerline of the pavement on a crowned section or on the high side of the pavement with a one-way slope. During all applications, the surfaces of adjacent structures shall be protected in such manner as to prevent their being spattered or marred. Bituminous materials shall not be discharged into borrow pits or gutters or upon the airport area.

609-3.6 APPLICATION OF AGGREGATE MATERIAL. Immediately after the application of the bituminous material or when directed, the aggregates at the rate specified for each designated application shall be spread uniformly over the bituminous material. Trucks spreading aggregate shall be operated backward so that the bituminous material will be covered before the truck wheels pass over it. The aggregate shall be spread in the same width of application as the bituminous material and shall not be applied in such thickness as to cause blanketing. Back-spotting or sprinkling of additional aggregate material, and pouring additional bituminous material over areas that show up having insufficient cover or bitumen, shall be done by hand whenever necessary. Additional spreading of aggregate material shall be done by means of a motor-patrol grader equipped with broom moldboard, a broom drag, or a power broom, as directed by the Engineer.

Immediately after spreading each application, the aggregate shall be rolled. The rolling shall be continued until no more aggregate material can be worked into the surface. In the construction of the second and third application, blading with the wire-broom moldboard attachment or broom dragging shall begin as soon as possible after the rolling has started and after the surface has set sufficiently to prevent excessive marking. Further blading and rolling on the strip being placed and on adjacent strips previously placed, shall be done as often as necessary to keep the aggregate material uniformly distributed. These operations shall be continued until the surface is evenly covered and cured to the satisfaction of the Engineer.

Succeeding applications shall not be applied until the preceding application has set and in no case until at least 24 hours have elapsed. If dust, dirt, or other foreign matter accumulates on the surface between the applications, the Contractor shall be required to sweep and clean the surface as specified herein. The bituminous material and the aggregate shall be spread upon the clean and properly cured surface and handled as required. Extreme care shall be taken in all applications to avoid brooming or tracking dirt or any foreign matter on any portion of the pavement surface under construction.

All surplus aggregate from the final application shall be swept off the surface and removed prior to final acceptance of the work.

609-3.7 CORRECTION OF DEFECTS. Any defects, such as raveling, low centers, lack of uniformity, or other imperfections caused by faulty workmanship, shall be corrected immediately to the satisfaction of the Engineer.

All defective materials resulting from over-heating, improper handling, or application shall be removed by the Contractor and replaced with approved materials as provided for in these specifications.

609-3.8 BITUMINOUS MATERIAL CONTRACTOR'S RESPONSIBILITY. Samples of the bituminous materials that the Contractor proposes to use, together with a statement as to their source and character, shall be submitted and approval obtained before use of such materials begins.

The Contractor shall furnish vendor's certified test reports for each carload, or equivalent, of bitumen shipped to the project. The report shall be delivered to the Engineer before permission is granted for use of the material. The furnishing of the vendor's certified test report for the bituminous material shall not be interpreted as a basis for final acceptance. All such test reports shall be subject to verification by testing sample materials as received for use on the project.

609-3.9 FREIGHT AND WEIGH BILLS. Before the final estimate is allowed the Contractor shall file with the Engineer receipted bills where railroad shipments are made, and certified weight bills when materials are received in any other manner, of the bituminous and covering materials actually used in the construction covered by the contract. The Contractor shall not remove bituminous material from the tank car or storage tank until the initial outage and temperature measurements have been taken by the Engineer, nor shall the car or tank be released until the final outage has been taken by the Engineer.

Copies of all freight bills and weigh bills shall be furnished to the Engineer during the progress of the work.

METHOD OF MEASUREMENT

609-4.1 The bituminous material shall be measured by the **[gallon(liter)][ton (kg)]**. Volume shall be corrected to the volume at 60°F (15°C) in accordance with ASTM D 1250 for cutback asphalt and Table IV-3 of The Asphalt Institute's Manual MS-6 for emulsified asphalt. Water added to emulsified asphalt will not be measured for payment.

609-4.2 The quantity of aggregate materials for the first application to be paid for shall be the number of tons (kg) of aggregate used for the accepted work.

609-4.3 The quantity of aggregate material for the second application to be paid for shall be the number of tons (kg) of aggregate used for the accepted work.

609-4.4 The quantity of aggregate material for the third application to be paid for shall be the number of tons (kg) of aggregate used for the accepted work.

BASIS OF PAYMENT

609-5.1 Payment shall be made at the contract unit price per **[gallon][ton]** for bituminous material for surface treatment and per ton for the first, second and third aggregate application. These prices shall be full compensation for furnishing all materials and for all preparation, hauling and application of the materials, and for all labor, equipment, tools, and incidentals necessary to complete the item.

Payment will be made under:

Item P-609-5.1	Bituminous Material—per **[gallon (liter)][ton (kg)]**
Item P-609-5.2	First Application Aggregate—per ton (kg)
Item P-609-5.3	Second Application Aggregate—per ton (kg)
Item P-609-5.4	Third Application Aggregate—per ton (kg)

TESTING REQUIREMENTS

ASTM C 29	Unit Weight of Aggregate
ASTM C 88	Soundness of Aggregates by Use of Sodium Sulfate or Magnesium Sulfate
ASTM C 131	Resistance to Abrasion of Small Size Coarse Aggregate by Use of the Los Angeles Machine
ASTM C 136	Sieve Analysis of Fine and Coarse Aggregates
AASHTO T 182	Coating and Stripping of Bitumen-Aggregate Mixtures

MATERIAL REQUIREMENTS

ASTM D 946	Penetration-Graded Asphalt-Cement for Use in Pavement Construction
ASTM D 977	Emulsified Asphalt
ASTM D 1250	Petroleum Measurement Tables
ASTM D 2397	Cationic Emulsified Asphalt
ASTM D 3381	Viscosity-Graded Asphalt-Cement for Use in Pavement Construction
Asphalt Institute Manual MS-6 Table IV-3	Asphalt Pocketbook of Useful Information (Temperature-Volume Corrections for Emulsified Asphalts)

END OF ITEM P-609

ITEM P-610 STRUCTURAL PORTLAND CEMENT CONCRETE

DESCRIPTION

610-1.1 This item shall consist of **[plain][reinforced]** structural portland cement concrete, prepared and constructed in accordance with these specifications, at the locations and of the form and dimensions shown on the plans.

MATERIALS

610-2.1 GENERAL. Only approved materials, conforming to the requirements of these specifications, shall be used in the work. They may be subjected to inspection and tests at any time during the progress of their preparation or use. The source of supply of each of the materials shall be approved by the Engineer before delivery or use is started. Representative preliminary samples of the materials shall be submitted by the Contractor, when required, for examination and test. Materials shall be scored and handled to insure the preservation of their quality and fitness for use and shall be located to facilitate prompt inspection. All equipment for handling and transporting materials and concrete must be clean before any material or concrete is placed therein.

In no case shall the use of pit-run or naturally mixed aggregates be permitted. Naturally mixed aggregate shall be screened and washed, and all fine and coarse aggregates shall be stored separately and kept clean. The mixing of different kinds of aggregates from different sources in one storage pile or alternating batches of different aggregates will not be permitted.

Aggregates shall be tested for deleterious reactivity with alkalies in the cement that may cause excessive expansion of the concrete. Acceptance of aggregates shall be based upon satisfactory evidence furnished by the Contractor that the aggregates, combined with other mixture constituents, do not produce excessive expansion in the concrete. This evidence shall include service records of concrete of comparable properties under similar conditions or exposure and certified records of tests by a testing laboratory that meets the requirements of ASTM C 1077. Tests shall be made in accordance with ASTM C 1260. Test specimens shall be produced using all components (e.g. coarse aggregate, fine aggregate, cement and fly ash…) to be included in the produced concrete. If the mean expansion of the test specimens, tested in accordance with ASTM C 1260, does not exceed 0.10 % at 16 days from casting the aggregates shall be accepted. If the mean expansion at 16 days is greater than 0.10% but less than 0.15%, the aggregate may be accepted based upon satisfactory service records and acceptance of the aggregate by a State Highway Department specifically addressing Alkali-Silica Reactivity. If the expansion is greater than 0.15%, the aggregate shall not be accepted for use.

610-2.2 COARSE AGGREGATE. The coarse aggregate for concrete shall meet the requirements of ASTM C 33. Crushed stone aggregate shall have a durability factor, as determined by ASTM C 666, greater than or equal to 95. The Engineer may consider and reserve final approval of other State classification procedures addressing aggregate durability.

Coarse aggregate shall be well graded from coarse to fine and shall meet one of the gradations shown in Table 1, using ASTM C 136.

610-2.3 FINE AGGREGATE. The fine aggregate for concrete shall meet the requirements of ASTM C 33.

The fine aggregate shall be well graded from fine to coarse and shall meet the requirements of Table 2 when tested in accordance with ASTM C 136:

TABLE 1. GRADATION FOR COARSE AGGREGATE

Sieve Designation (square openings)	Percentage by Weight Passing Sieves						
	2”	1-1/2”	1”	3/4"	1/2"	3/8"	No.4
No. 4 to 3/4 in. (4.75-19.0 mm)			100	90-100		20-55	0-10
No. 4 to 1 in. (4.75-25.0 mm)		100	90-100		25-60		0-10
No. 4 to 1-1/2 in. (4.75-38.1 mm)	100	95-100		35-70		10-30	0-5

TABLE 2. GRADATION FOR FINE AGGREGATE

Sieve Designation (square openings)	Percentage by Weight Passing Sieves
3/8 inch (9.5 mm)	100
No. 4 (4.75 mm)	95-100
No. 16 (1.18 mm)	45-80
No. 30 (0.60 mm)	25-55
No. 50 (0.30 mm)	10-30
No. 100 (0.15 mm)	2-10

Blending will be permitted, if necessary, in order to meet the gradation requirements for fine aggregate. Fine aggregate deficient in the percentage of material passing the No. 50 mesh sieve may be accepted, provided that such deficiency does not exceed 5% and is remedied by the addition of pozzolanic or cementitious materials other than portland cement, as specified in 610-2.6 on admixtures, in sufficient quantity to produce the required workability as approved by the Engineer.

610-2.4 CEMENT. Cement shall conform to the requirements of **[ ]** Type **[ ]**.

* * * *

Air-entraining admixtures shall meet the requirements of ASTM C 260. Air-entraining admixtures shall be added at the mixer in the amount necessary to produce the specified air content.

Water-reducing, set-controlling admixtures shall meet the requirements of ASTM C 494, Type A, water-reducing or Type D, water-reducing and retarding. Water-reducing admixtures shall be added at the mixer separately from air-entraining admixtures in accordance with the manufacturer's printed instructions.

610-2.7 PREMOLDED JOINT MATERIAL. Premolded joint material for expansion joints shall meet the requirements of ASTM **[ ].**

* * * *

* * * *

The internal ties shall be arranged so that, when the forms are removed, no metal will show in the concrete surface or discolor the surface when exposed to weathering. All forms shall be wetted with water or with a non-staining mineral oil, which shall be applied shortly before the concrete is placed. Forms shall be constructed so that they can be removed without injuring the concrete or concrete surface. The forms shall not be removed before the expiration of at least 30 hours from vertical faces, walls, slender columns, and similar structures; forms supported by falsework under slabs, beams, girders, arches, and similar construction shall not be removed until tests indicate that at least 60% of the design strength of the concrete has developed.

610-3.9 PLACING REINFORCEMENT. All reinforcement shall be accurately placed, as shown on the plans, and shall be firmly held in position during concreting. Bars shall be fastened together at intersections. The reinforcement shall be supported by approved metal chairs. Shop drawings, lists, and bending details shall be supplied by the Contractor when required.

610-3.10 EMBEDDED ITEMS. Before placing concrete, any items that are to be embedded shall be firmly and securely fastened in place as indicated. All such items shall be clean and free from coating, rust, scale, oil, or any foreign matter. The embedding of wood shall be avoided. The concrete shall be spaded and consolidated around and against embedded items.

610-3.11 PLACING CONCRETE. All concrete shall be placed during daylight, unless otherwise approved. The concrete shall not be placed until the depth and character of foundation, the adequacy of forms and falsework, and the placing of the steel reinforcing have been approved. Concrete shall be placed as soon as practical after mixing and in no case later than 1 hour after water has been added to the mix. The method and manner of placing shall be such to avoid segregation and displacement of the reinforcement. Troughs, pipes, and chutes shall be used as an aid in placing concrete when necessary. Dropping the concrete a distance of more than 5 feet (1.5 m), or depositing a large quantity at one point, will not be permitted. Concrete shall be placed upon clean, damp surfaces, free from running water, or upon properly consolidated soil.

The concrete shall be compacted with suitable mechanical vibrators operating within the concrete. When necessary, vibrating shall be supplemented by hand spading with suitable tools to assure proper and adequate compaction. Vibrators shall be manipulated so as to work the concrete thoroughly around the reinforcement and embedded fixtures and into corners and angles of the forms. The vibration at any joint shall be of sufficient duration to accomplish compaction but shall not be prolonged to the point where segregation occurs. Concrete deposited under water shall be carefully placed in a compact mass in its final position by means of a tremie, a closed bottom dump bucket, or other approved method and shall not be disturbed after being deposited.

610-3.12 CONSTRUCTION JOINTS. When the placing of concrete is suspended, necessary provisions shall be made for joining future work before the placed concrete takes its initial set. For the proper bonding of old and new concrete, such provisions shall be made for grooves, steps, keys, dovetails, reinforcing bars or other devices as may be prescribed. The work shall be arranged so that a section begun on any day shall be finished during daylight of the same day. Before depositing new concrete on or against concrete that has hardened, the surface of the hardened concrete shall be cleaned by a heavy steel broom, roughened slightly, wetted, and covered with a neat coating of cement paste or grout.

610-3.13 EXPANSION JOINTS. Expansion joints shall be constructed at such points and of such dimensions as may be indicated on the drawings. The premolded filler shall be cut to the same shape as that of the surfaces being joined. The filler shall be fixed firmly against the surface of the concrete already in place in such manner that it will not be displaced when concrete is deposited against it.

610-3.14 DEFECTIVE WORK. Any defective work discovered after the forms have been removed shall be immediately removed and replaced. If any dimensions are deficient, or if the surface of the concrete is bulged, uneven, or shows honeycomb, which in the opinion of the Engineer cannot be repaired satisfactorily, the entire section shall be removed and replaced at the expense of the Contractor.

610-3.15 SURFACE FINISH. All exposed concrete surfaces shall be true, smooth, and free from open or rough spaces, depressions, or projections. The concrete in horizontal plane surfaces shall be brought flush with the finished top surface at the proper elevation and shall be struck-off with a straightedge and floated. Mortar finishing

shall not be permitted, nor shall dry cement or sand-cement mortar be spread over the concrete during the finishing of horizontal plane surfaces.

When directed, the surface finish of exposed concrete shall be a rubbed finish. If forms can be removed while the concrete is still green, the surface shall be pointed and wetted and then rubbed with a wooden float until all irregularities are removed. If the concrete has hardened before being rubbed, a carborundum stone shall be used to finish the surface. When approved, the finishing can be done with a rubbing machine.

610-3.16 CURING AND PROTECTION. All concrete shall be properly cured and protected by the Contractor. The work shall be protected from the elements, flowing water, and from defacement of any nature during the building operations. The concrete shall be cured as soon as it has sufficiently hardened by covering with an approved material. Water-absorptive coverings shall be thoroughly saturated when placed and kept saturated for a period of at least 3 days. All curing mats or blankets shall be sufficiently weighted or tied down to keep the concrete surface covered and to prevent the surface from being exposed to currents of air. Where wooden forms are used, they shall be kept wet at all times until removed to prevent the opening of joints and drying out of the concrete. Traffic shall not be allowed on concrete surfaces for 7 days after the concrete has been placed.

610-3.17 DRAINS OR DUCTS. Drainage pipes, conduits, and ducts that are to be encased in concrete shall be installed by the Contractor before the concrete is placed. The pipe shall be held rigidly so that it will not be displaced or moved during the placing of the concrete.

610-3.18 COLD WEATHER PROTECTION. When concrete is placed at temperatures below 40°F (4°C), the Contractor shall provide satisfactory methods and means to protect the mix from injury by freezing. The aggregates, or water, or both, shall be heated in order to place the concrete at temperatures between 50°F and 100°F (10°C and 38°C).

Calcium chloride may be incorporated in the mixing water when directed by the Engineer. Not more than 2 pounds (908 grams) of Type 1 nor more than 1.6 pounds (726 grams) of Type 2 shall be added per bag of cement. After the concrete has been placed, the Contractor shall provide sufficient protection such as cover, canvas, framework, heating apparatus, etc., to enclose and protect the structure and maintain the temperature of the mix at not less than 50°F (10°C) until at least 60% of the designed strength has been attained.

610-3.19 FILLING JOINTS. All joints that require filling shall be thoroughly cleaned, and any excess mortar or concrete shall be cut out with proper tools. Joint filling shall not be started until after final curing and shall be done only when the concrete is completely dry. The cleaning and filling shall be carefully done with proper equipment and in a manner to obtain a neat looking joint free from excess filler.

METHOD OF MEASUREMENT

610-4.1 Portland cement concrete shall be measured by the number of cubic yards (cubic meters) of concrete complete in place and accepted. In computing the yardage of concrete for payment, the dimensions used shall be those shown on the plans or ordered by the Engineer. No measurements or other allowances shall be made for forms, falsework, cofferdams, pumping, bracing, expansion joints, or finishing of the concrete. No deductions in yardage shall be made for the volumes of reinforcing steel or embedded items.

610-4.2 Reinforcing steel shall be measured by the calculated theoretical number of pounds (kg) placed, as shown on the plans, complete in place and accepted. The unit weight used for deformed bars shall be the weight of plain square or round bars of equal nominal size. If so indicated on the plans, the poundage to be paid for shall include the weight of metal pipes and drains, metal conduits and ducts, or similar materials indicated and included.

BASIS OF PAYMENT

610-5.1 Payment shall be made at the contract unit price per cubic yard (cubic meter) for structural portland cement concrete and per pound (kg) for reinforcing steel. These prices shall be full compensation for furnishing all

materials and for all preparation, delivery and installation of these materials, and for all labor, equipment, tools, and incidentals necessary to complete the item.

Payment will be made under:

Item P-610-5.1 Structural Portland Cement Concrete -–- per cubic yard (cubic meter)

Item P-610-5.1 Steel Reinforcement -– -per pound (kg)

TESTING REQUIREMENTS

ASTM C 31 Making and Curing Test Specimens in the Field

ASTM C 39 Compressive Strength of Cylindrical Concrete Specimens

ASTM C 136 Sieve Analysis of Fine and Coarse Aggregates

ASTM C 138 Density (Unit Weight), Yield, and Air Content (Gravimetric) of Concrete

ASTM C 143 Slump of Hydraulic Cement Concrete

ASTM C 231 Air Content of Freshly Mixed Concrete by the Pressure Method

ASTM C 666 Resistance of Concrete to Rapid Freezing and Thawing

ASTM C 1077 Laboratories Testing Concrete and Concrete Aggregates for Use in Construction and Criteria for Laboratory Evaluation

ASTM C 1260 Potential Alkali Reactivity of Aggregates (Mortar-Bar Method)

MATERIAL REQUIREMENTS

ASTM A 184 Specification for Fabricated Deformed Steel Bar or Rod Mats for Concrete Reinforcement

ASTM A 185 Steel Welded Wire Fabric, Plain, for Concrete Reinforcement

ASTM A 497 Steel Welded Wire Fabric, Deformed, for Concrete Reinforcement

ASTM A 615 Deformed and Plain Billet-Steel Bars for Concrete Reinforcement

ASTM A 704 Welded Steel Plain Bars or Rod Mats for Concrete Reinforcement

ASTM C 33 Concrete Aggregates

ASTM C 94 Ready-Mixed Concrete

ASTM C 150 Portland Cement

ASTM C 171 Sheet Materials for Curing Concrete

ASTM C 172 Sampling Freshly Mixed Concrete

ASTM C 260 Air-Entraining Admixtures for Concrete

ASTM C 309	Liquid Membrane-Forming Compounds for Curing Concrete
ASTM C 494	Chemical Admixtures for Concrete
ASTM C 595	Blended Hydraulic Cements
ASTM C 618	Coal Fly Ash and Raw or Calcined Natural Pozzolan for Use as a Mineral Admixture in Concrete
ASTM D 1751	Specification for Preformed Expansion Joint Fillers for Concrete Paving and Structural Construction (Non-extruding and Resilient Bituminous Types)
ASTM D 1752	Specification for Preformed Sponge Rubber and Cork Expansion Joint Fillers for Concrete Paving and Structural Construction
AASHTO T 26	Quality of Water to be Used in Concrete

END OF ITEM P-610

ITEM P-620 RUNWAY AND TAXIWAY PAINTING

DESCRIPTION

620-1.1 This item shall consist of the painting of numbers, markings, and stripes on the surface of runways, taxiways, and aprons, in accordance with these specifications and at the locations shown on the plans, or as directed by the Engineer.

MATERIALS

620-2.1 MATERIALS ACCEPTANCE. The Contractor shall furnish manufacturer's certified test reports for materials shipped to the project. The certified test reports shall include a statement that the materials meet the specification requirements. The reports can be used for material acceptance or the Engineer may perform verification testing. The reports shall not be interpreted as a basis for payment. The Contractor shall notify the Engineer upon arrival of a shipment of materials to the site.

620-2.2 PAINT. Paint shall be **[Waterborne, Epoxy, Methacrylate, or Solvent-base]** in accordance with the requirements of paragraph 620-2.2 **[ ]**. Paint shall be furnished in **[ ]** in accordance with Federal Standard No 595.

*** * * \

Organic yellow, other colors, and tinting as required to meet color standard. Epoxy resin shall be 75 to 79 percent.

(2) Epoxy Content. Component A. The weight per epoxy equivalent, when tested in accordance with ASTM D 1652 shall be the manufacturer's target plus or minus 50.

(3) Amine Number. Component B. When tested in accordance with ASTM D 2074 shall be the manufacturer's target plus or minus 50.

(4) Prohibited Materials. The manufacturer shall certify that the product does not contain mercury, lead, hexavalent chromium, halogenated solvents, nor any carcinogen, as defined in 29 CFR 1910.1200.

(5) Daylight Directional Reflectance:

(a) White: The daylight directional reflectance of the white paint shall not be less than 75 percent (relative to magnesium oxide), when tested in accordance with Federal Test Method Standard No. 141D/GEN, Method 6121.

(b) Yellow: The daylight directional reflectance of the yellow paint shall not be less than 38 percent (relative to magnesium oxide), when tested in accordance with Federal Test Method Standard No. 141D/GEN. The x and y values shall be consistent with the Federal Hegman yellow color standard chart for traffic yellow standard 33538, or shall be consistent with the tolerance listed below:

x .462	x .470	x .479	x .501
y .438	y .455	y .428	y .452

(6) Accelerated Weathering.

(a) Sample Preparation. Apply the paint at a wet film thickness of 0.013 inch (0.33 mm) to four 3 by 6 inch (8 by 15 cm) aluminum panels prepared as described in Federal Test Method Standard No. 141D/GEN, Method 2013. Air dry the sample 48 hours under standard conditions.

(b) Testing Conditions. Test in accordance with ASTM G 15453 using both Ultra Violet (UV-B) Light and condensate exposure, 72 hours total, alternating 4 hour UV exposure at 60 degree C, and 4 hours condensate exposure at 40 degrees C.

(c) Evaluation. Remove the samples and condition for 24 hours under standard conditions. Determine the directional reflectance and color match using the procedures in paragraph 620-2.2b(5) above. Evaluate for conformance with the color requirements.

(7) Volatile Organic Content. Determine the volatile organic content in accordance with 40 CFR Part 60 Appendix A, Method 24.

(8) Dry Opacity. Use Procedure B, Method B of Method 4121 of Federal Test Method Standard No. 141D/GEN. The wet film thickness shall be 0.015 inch (0.12 mm). The minimum opacity for white and colors shall be 0.92.

(9) Abrasion Resistance. Subject the panels prepared in paragraph 620-2.2b(6) to the abrasion test in accordance with ASTM D 968, Method A, except that the inside diameter of the metal guide tube shall be from 0.747 to 0.750 inch (18.97 to 19.05 mm). Five liters of unused sand shall be used for each test panel. The test shall be run on two test panels. [Note: five liters of sand weighs 17.5 lb. (7.94 kg).] Both baked and weathered paint films shall require not less than 150 liters of sand for the removal of the paint films.

(10) Hardness, Shore. Hardness shall be at least 80 when tested in accordance with ASTM D 2240.

c. METHACRYLATE. Paint shall be a two component, minimum 99 percent solids-type system conforming to the following:

(1) Pigments. Component A. Percent by weight.

(a) White:
Titanium Dioxide, ASTM D 476, type II shall be 6 percent minimum.
Methacrylate resin shall be 18 percent minimum.

(b) Yellow and Colors:
Titanium Dioxide, ASTM D 476, type II shall be 6 percent minimum.
Organic yellow, other colors, and tinting as required to meet color standard.
Methacrylate resin shall be 18 percent minimum.

(2) Prohibited Materials. The manufacturer shall certify that the product does not contain mercury, lead, hexavalent chromium, halogenated solvents, nor any carcinogen, as defined in 29 CFR 1910.1200.

(3) Daylight Directional Reflectance:

(a) White: The daylight directional reflectance of the white paint shall not be less than 80 percent (relative to magnesium oxide), when tested in accordance with Federal Test Method Standard No. 141D/GEN, Method 6121.

(b) Yellow: The daylight directional reflectance of the yellow paint shall not be less than 55 percent (relative to magnesium oxide), when tested in accordance with Federal Test Method Standard No. 141D/GEN. The x and y values shall be consistent with the Federal Hegman yellow color standard chart for traffic yellow standard 33538, or shall be consistent with the tolerance listed below:

x .462	x .470	x .479	x .501
y .438	y .455	y .428	y .452

(4) Accelerated Weathering.

(a) Sample Preparation. Apply the paint at a wet film thickness of 0.013 inch (0.33 mm) to four 3 by 6 inch (8 by 15 cm) aluminum panels prepared as described in Method 2013 of Federal Test Method Standard No. 141D/GEN. Air dry the sample 48 hours under standard conditions.

(b) Testing Conditions. Test in accordance with ASTM G 53 154 using both Ultra Violet (UV-B) Light and condensate exposure, 72 hours total, alternating 4 hour UV exposure at 60 degree C, and 4 hours condensate exposure at 40 degrees C.

(c) Evaluation. Remove the samples and condition for 24 hours under standard conditions. Determine the directional reflectance and color match using the procedures in paragraph 620-2.2c(3) above. Evaluate for conformance with the color requirements.

(5) Volatile Organic Content. Determine the volatile organic content in accordance with 40 CFR Part 60 Appendix A, Method 24.

(6) Dry Opacity. Use Procedure B, Method B of Method 4121 of Federal Test Method Standard No. 141D/GEN. The wet film thickness shall be 0.015 inch (0.12 mm). The minimum opacity for white and colors shall be 0.92.

(7) Abrasion Resistance. Subject the panels prepared in paragraph 620-2.2c(4) to the abrasion test in accordance with ASTM D 968, Method A, except that the inside diameter of the metal guide tube shall be from 0.747 to 0.750 inch (18.97 to 19.05 mm). Five liters of unused sand shall be used for each test panel. The test shall

be run on two test panels. [Note: five liters of sand weighs 17.5 lb. (7.94 kg).] Both baked and weathered paint films shall require not less than 150 liters of sand for the removal of the paint films.

(8) Hardness, Shore. Hardness shall be at least 80 when tested in accordance with ASTM D 2240.

d. SOLVENT-BASE. Paint shall meet the requirements of Federal Specification **[A-A-2886A Type I or Type II]**.

* * * *

Gradation					
		Type IV-A		Type IV-B	
U.S. Sieve No.	Microns	Minimum percent passing by weight	Maximum percent passing by weight	Minimum percent passing by weight	Maximum percent passing by weight
PAN					

* * * *

* * * *

* * * *

All emptied containers shall be returned to the paint storage area for checking by the Engineer. The containers shall not be removed from the airport or destroyed until authorized by the Engineer.

* * * *

ASTM C 146	Chemical Analysis of Glass Sand
ASTM C 371	Wire-Cloth Sieve Analysis of Nonplastic Ceramic Powders
ASTM D 92	Test Method for Flash and Fire Points by Cleveland Open Cup
ASTM D 711	No-Pick-Up Time of Traffic Paint
ASTM D 968	Standard Test Methods for Abrasion Resistance of Organic Coatings by Falling Abrasive
ASTM D 1213-54(1975)	Test Method for Crushing Resistance of Glass Spheres
ASTM D 1652	Test Method for Epoxy Content of Epoxy Resins
ASTM D 2074	Test Method for Total Primary, Secondary, and Tertiary Amine Values of Fatty Amines by Alternative Indicator Method
ASTM D 2240	Test Method for Rubber Products-Durometer Hardness
ASTM G 15453	Operating Light and Water-Exposure Apparatus (Fluorescent Light Apparatus UV-Condensation Type) for Exposure of Nonmetallic Materials.
Federal Test Method Standard No. 141D/GEN	Paint, Varnish, Lacquer and Related Materials; Methods of Inspection, Sampling and Testing

MATERIAL REQUIREMENTS

ASTM D 476	Specifications for Dry Pigmentary Titanium Dioxide Pigments Products
Code of Federal Regulations	40 CFR Part 60, Appendix A – Definition of Traverse Point Number and Location
Code of Federal Regulations	29 CFR Part 1910.1200 – Hazard Communications
FED SPEC TT-B-1325C	Beads (Glass Spheres) Retroreflective
AASHTO M 247	Glass Beads Used in Traffic Paints
FED SPEC TT-P-1952D	Paint, Traffic and Airfield Marking, Waterborne
Commercial Item Description (CID) A-A-2886A	Paint, Traffic, Solvent Based
FED STD 595	Colors used in Government Procurement

END OF ITEM P-620

Intentionally Left Blank

ITEM P-626 EMULSIFIED ASPHALT SLURRY SEAL SURFACE TREATMENT

DESCRIPTION

626-1.1 This item shall consist of a mixture of emulsified asphalt, mineral aggregate, and water properly proportioned, mixed, and spread on an asphalt prepared underlying course or existing wearing course in accordance with these specifications and shall conform to the dimensions shown on the plans or as directed by the Engineer.

MATERIALS

626-2.1 AGGREGATE. The aggregate shall consist of sound and durable manufactured sand, slag, crusher fines, crushed stone, or a combination thereof. The aggregate shall be clean and free from vegetable matter, dirt, and other deleterious substances. The aggregate shall have a sand equivalent of not less than **[45]** percent when tested in accordance with ASTM D 2419. The aggregate shall show a loss of not more than **[35]** percent when tested in accordance with ASTM C 131. The sodium sulfate soundness loss shall not exceed **[12]** percent, or the magnesium soundness loss shall not exceed **[20]** percent after 5 cycles when tested in accordance with ASTM C 88. Aggregate shall be 100 percent crushed.

* * * *

provide considerable skid resistance and may be considered for most projects. A finer Type II gradation will provide sufficient friction and will not cause excessive tire wear. Tire wear appears to be related to the amount a material passing the #4 and retained on the #8 sieve. We recommend that no more than 10-15% be retained on the #8 sieve.

* * * *

mineral filler shall be considered as part of the aggregate.

626-2.3 EMULSIFIED ASPHALT. The emulsified asphalt shall conform to the requirements of ASTM D **[977 and/or 2397]** and shall be SS, CSS, CQS, or QS type emulsions.

* *

The cement mixing test is waived for these slurry type emulsions. The emulsified asphalt shall be either anionic or cationic, whichever is best suited to the aggregate and job conditions to be encountered. The type of emulsified asphalt to use will be determined by the mix design. The Engineer shall specify the type of emulsion and the controlling specification, which shall be from ASTM D 977 or ASTM D 2397, and the material shall be SS, CSS, CQS, or QS.

* *

626-2.4 WATER. All water used in making the slurry shall be potable and free from harmful soluble salts and chemicals.

COMPOSITION AND APPLICATION

626-3.1 COMPOSITION. The slurry seal shall consist of a mixture of emulsified asphalt, mineral aggregate, and water.

626-3.2 JOB MIX FORMULA. No slurry seal for payment shall be placed until a mix design has been approved by the Engineer. The mix design shall be developed by a laboratory with experience in designing slurry seal mixes and a signed copy shall be submitted in writing by the Contractor to the Engineer at least 10 days prior to the start of operations.

The laboratory report (mix design) shall indicate the proportions of aggregates, mineral filler (min. and max.), water (min. and max.) and asphalt emulsion based on the dry aggregate weight. It shall also report the quantitative effects of moisture content on the unit weight of the aggregate (bulking effects). The mix design shall be in effect until modified in writing by the Engineer. Should a change in sources of materials be made, a new mix design shall be established before the new material is used.

* *

The main items of design in emulsified asphalt slurry seals are aggregate gradation, emulsified asphalt content, and consistency of the mixture. The aggregates, emulsified asphalt, and water should form a creamy-textured slurry that, when spread, will flow ahead of the strike-off squeegee. This will allow the slurry to flow down into the cracks in the pavement and fill them before the strike-off passes over. Technical Bulletin No. 111, Outline Guide Design Procedure for Slurry Seal, and publication A 105 Recommended Performance Guidelines published by the International Slurry Surfacing Association (ISSA) contains information to aid designers of slurry mixes.

* *

The Contractor shall submit to the Engineer for approval a complete mix design on the materials proposed for use, prepared and certified by an approved laboratory**.** Compatibility of the aggregate, emulsion, mineral filler, and other additives shall be verified by the mix design. The mix design shall be made with the same aggregate and grade of emulsified asphalt that the Contractor will provide on the project. At a minimum the required tests and values needed are as follows:

	DESCRIPTION	SPECIFICATION
ISSA TB-100	Wet Track Abrasion Loss One Hour Soak	50 g/ft² Max (538 g/m²)
ISSA TB-115	Determination of Slurry Seal Compatibility	Pass

626-3.3 APPLICATION RATE. Unless otherwise specified, the slurry seal shall be applied to at the application rates shown in Table 3 for that gradation of material used.

TABLE 3. APPLICATION RATES

	Type I	Type II	Type III	Type IA
Pounds of mixture per square yard	8 - 12	12 - 20	18 - 30	10 – 16
Kilograms of mixture per square meter	4.3 - 6.5	6.5 - 10.9	9.8 - 16.3	5.4 – 8.6

The rate of application shall not vary more than ± 2 pounds per square yard (±1.1 kilograms per square meter).

626-3.4 TEST SECTIONS. Test sections shall be placed prior to the start of the slurry seal work in the presence of the Engineer. The test area will be designated by the Engineer and will be located on the existing pavement. Test strips shall be made by each machine after calibration. Samples of the slurry seal may be taken and the mix consistency verified by using ISSA TB-106 Slurry Seal Consistency test. In addition, the proportions of the individual materials may be verified by the Engineer by using the calibration information provided after machine calibration. If any test does not meet specification requirements, additional tests shall be made at the expense of the Contractor, until an acceptable test strip is placed.

CONSTRUCTION METHODS

626-4.1 WEATHER LIMITATIONS. The slurry seal shall not be applied if either the pavement or air temperature is below 50 °F (10 °C) and falling but may be applied when both pavement and air temperature are above 45 °F (7 °C) and rising. No slurry seal shall be applied when there is danger that the finished product will freeze before 24 hours. The mixture shall not be applied when weather conditions prolong opening to traffic beyond a reasonable time.

* * * *

forward and reverse speed of the machine during application of the slurry seal, with a self-loading device, with opposite side driver stations, all part of original equipment manufacturer design.

The aggregate shall be prewetted immediately prior to mixing with the emulsion. The mixing unit of the mixing chamber shall be capable of thoroughly blending all ingredients. No excessive mixing shall be permitted. The mixing machine shall be equipped with a fines feeder that provides an accurate metering device or method to introduce a predetermined proportion of mineral filler into the mixer at the same time and location that the aggregate is fed into the mixer.

The mixing machine shall be equipped with a water pressure system and fog-type spray bar adequate for complete fogging of the surface with an application of 0.05 to 0.10 gallon per square yard (0.23 to 0.45 liter per square meter) preceding the spreading equipment.

Sufficient machine storage capacity to mix properly and apply a minimum of 5 tons (4 500 kg) of the slurry shall be provided. Proportioning devices shall be calibrated prior to placing the slurry seal.

b. Slurry Spreading Equipment. The mixture shall be spread uniformly by means of a conventional surfacing spreader box attached to the mixer and equipped to agitate and spread the material evenly throughout the box. A front seal shall be provided to insure no loss of the mixture at the surface contact point. The rear seal shall act as the final strike-off and shall be adjustable. The spreader box and rear strike-off shall be so designed and operated that a uniform consistency is achieved to produce a free flow of material to the rear strike-off. The spreader box shall have suitable means provided to side shift the box to compensate for variations in the pavement geometry. A burlap drag or other approved screed may be attached to the rear of the spreader box to provide a uniform mat.

c. Auxiliary Equipment. Other tools or equipment such as brushes, hand squeegees, hose equipment, tank trucks, water distributors and flushers, power blowers, barricades, etc., shall be provided as required.

d. Roller. The roller, if required, shall be a self-propelled pneumatic-tired roller capable of exerting a contact pressure during rolling of 50 pounds per square inch (350 000 Newton's per square meter). It shall be equipped with a water spray system, to be used if the slurry is picking up on the tires during rolling.

e. Tack Coat and Distributor. Normally a tack coat is not required unless the surface to be covered is extremely dry and raveled or is concrete or brick. If required, the tack coat should consist of one part emulsified asphalt and three parts water. The emulsified asphalt may be the same as that used in the mix. Pressure distributors used for application of the diluted asphalt emulsion tack coat shall be self-propelled, equipped with pneumatic tires, and capable of uniformly applying 0.05 to 0.15 gallon per square yard (0.23 to 0.68 liter per square meter) of the diluted emulsion over the required width of application. Distributors shall be equipped with tachometers, pressure gages, and volume-measuring devices. The tack coat shall be applied at least 2 hours before the slurry seal but within the same day.

626-4.3 EQUIPMENT CALIBRATION. Each slurry mixing unit to be used on the project shall be calibrated in the presence of the Engineer prior to construction. Previous calibration documentation covering the exact materials to be used may be accepted by the Engineer provided they were made during the calendar year. The documentation shall include an individual calibration of each material at various settings, which can be related to the machine's metering devices. No machine will be allowed to work on the project until the calibration has been completed and/or accepted.

626-4.4 PREPARATION OF EXISTING SURFACE. Prior to placing the tack coat and slurry seal coat, unsatisfactory areas shall be repaired and the surface shall be cleaned of dust, dirt, or other loose foreign matter, grease, oil, excessive rubber accumulation, or any type of objectionable surface film. Any standard cleaning method will be acceptable except that water flushing will not be permitted in areas where considerable cracks are present in the pavement surface.

Any painted stripes or markings on the surface of the runways or taxiways to be treated, shall be removed.

Cracks wider than 1/4 inch (6 mm) shall be cleaned with compressed air, and sealed with a compatible crack sealer prior to applying the slurry seal. Cracks wider than 3/4 inch (19 mm) should be pre-filled and sealed with the slurry mixture prior to surfacing. Cracks that show evidence of vegetation shall be cleaned and treated with an approved herbicide.

626-4.5 APPLICATION OF SLURRY SEAL COAT. The surface shall be prewet by fogging ahead of the slurry spreader box. Water used in prewetting the surface shall be applied at such a rate that the entire surface is damp with no apparent flowing water in front of the slurry spreader box. The slurry mixture shall be of the desired consistency when deposited on the surface, and no additional elements shall be added. Total time of mixing shall not exceed 2 minutes. A sufficient amount of slurry shall be carried in all parts of the spreader box at all times so that complete coverage of all surface voids and cracks is obtained. Care shall be taken not to overload the spreader box that shall be towed at a slow and uniform rate not to exceed 5 miles per hour (8 kilometers per hour). No lumping, balling, or unmixed aggregate shall be permitted. No segregation of the emulsion and fines from the coarse aggregate will be permitted. If the coarse aggregate settles to the bottom of the mix, the slurry shall be removed from the pavement surface. A sufficient amount of slurry shall be fed into the box to keep a full supply against the full width of the spreader box. The mixture shall not be permitted to overflow the sides of the spreader box. No breaking of the emulsion will be allowed in the spreader box. The finished surface shall have no more than four (4) tear or drag marks greater than 1/2 inch (13 mm) wide and 4 inches (100 mm) long in any 12 foot by 22 foot (25 sq. meter) section. It shall have no tear or drag marks greater than 1 inch (25 mm) wide and 3 inches (15 mm) long.

The finished surface shall have no transverse ripples of 1/4 inch (6 mm) or more in depth, as measured with a 10-foot (3 meter) straight edge laid upon the surface.

Adjacent lanes shall be lapped at the edges a minimum of 2 inches (50 mm) with a maximum of 4 inches (100 mm) to provide complete sealing at the overlap. Construction longitudinal and transverse joints shall be neat and uniform without buildup, uncovered areas, or unsightly appearance. All joints shall have no more than 1/4 inch (6 mm) difference in elevation when measured across with a 10 foot (3 meter) straight edge.

* * * *

Upon completion of the project, the Contractor shall sweep the finished surface with a conventional power rotary broom, to remove any potential loose material from the surface. The material removed by sweeping shall be disposed of in a manner satisfactory to the Engineer.

* *

The cured slurry shall have a homogeneous appearance, fill all cracks, adhere firmly to the surface and have a skid resistant texture. The slurry seal will not stop shrinkage and other large thermal cracks from reflecting back through the new slurry surface.

* *

626-4.6 EMULSION MATERIAL (CONTRACTORS RESPONSIBILITY). Samples of the emulsion that the Contractor proposes to use, together with a statement as to its source, shall be submitted, and approval shall be obtained before using such material. The Contractor shall submit to the Engineer a manufacturer's certified report for each consignment of the emulsion. The manufacturer's certified report shall not be interpreted as a basis for final acceptance. All such reports shall be subject to verification by testing samples of the emulsion as received for use on the project.

METHOD OF MEASUREMENT

626-5.1 The emulsified asphalt shall be measured by the **[gallon (liter)] [ton (kg)]**. Only the actual quantity of undiluted emulsified asphalt will be measured for payment.

626-5.2 Aggregate shall be measured by the ton (kg) of dry aggregate.

[626-5.3 Crack sealing shall be measured by the linear foot (meter) of cracks sealed.]

[626-5.4 Surface repair shall be measured by the ton (kg) or square measurement of material placed.]

[626-5.5 Paint and rubber removal shall be measured by the linear foot (meter) or square measurement.]

BASIS OF PAYMENT

626-6.1 Payment shall be made at the contract unit price per **[gallon (liter)] (ton (kg)]** for the emulsified asphalt and at the contract price per ton (kg) for aggregate **[and the contract unit price for crack sealing per linear foot] [and the contract unit price for surface repair per ton (kg) or square measurement] [and the contract unit price for paint and rubber removal per lineal foot (meter) or square measurement]**.

These prices shall be full compensation for furnishing all materials, for preparing, mixing, and applying these materials, and for all labor, equipment, tools, and incidentals necessary to complete the item.

Payment will be made under:

Item P-626-6.1	Emulsified Asphalt for Slurry Coat—per [gallon (liter)] [ton (kg)]
Item P-626-6.2	Aggregate—per ton (kg) of dry aggregate.
[Item P-626-6.3	Emulsified Asphalt for Tack Coat—per [gallon (liter)] [ton (kg)]]
[Item P-626-6.4	Crack sealing — per linear [feet] (meter)]

[Item P-626-6.5 Surface Repair—per [ton] (kg) or square measurement]

[Item P-626-6.6 Paint and Rubber removal—per linear foot (meter) or square measurement (meter)]

TESTING REQUIREMENTS

ASTM C 88	Soundness of Aggregates by Use of Sodium Sulfate or Magnesium Sulfate
ASTM C 117	Materials Finer than No. 200 Sieve in Mineral Aggregates by Washing
ASTM C 128	Density, Relative Density (Specific Gravity), and Absorption of Fine Aggregate
ASTM C 131	Resistance to Degradation of Small Size Coarse Aggregate by Abrasion and Impact in the Los Angeles Machine
ASTM C 136	Sieve or Screen Analysis of Fine and Coarse Aggregates
ASTM D 75	Sampling Aggregates
ASTM D 2419	Sand Equivalent Value of Soils and Fine Aggregate
ISSA A 105	Recommended Performance Guidelines
ISSA TB-100	Wet Track Abrasion Loss
ISSA TB-106	Slurry Seal Consistency
ISSA TB 111	Outline Guide Design Procedure for Slurry Seal
ISSA TB-115	Determination of Slurry Seal Compatibility

MATERIAL REQUIREMENTS

ASTM D 242	Mineral Filler for Bituminous Paving Mixtures
ASTM D 977	Emulsified Asphalt
ASTM D 2397	Cationic Emulsified Asphalt

END OF ITEM P-626

ITEM P-630 REFINED COAL TAR EMULSION WITHOUT ADDITIVES, SLURRY SEAL SURFACE TREATMENT

630-1.1 GENERAL. This item shall consist of a mixture of refined coal tar emulsion, mineral aggregate, and water properly proportioned, mixed, and applied as a slurry seal on new or existing (aged) asphalt concrete pavement.

MATERIALS

630-2.1 Refined Coal Tar Emulsion. A refined coal tar emulsion prepared from a high temperature refined coal tar conforming to the requirements of ASTM specification D 490 for grade 11-12. The use of oil and water gas tar is not allowed. Base refined coal tar emulsion must conform to all requirements of Federal Specification R-P-355.

630-2.2 Aggregate. The aggregate shall be washed dry silica sand or boiler slag free of dust, trash, clay, organic materials or other deleterious substances. The aggregate shall meet the gradation requirements of Table 1, when tested in accordance with ASTM C 136.

TABLE 1. GRADATION OF AGGREGATES*

Sieve Size		Percent Retained	
		Minimum	Maximum
#20 or coarser	(0.850 mm)	0	2
#30	(0.600 mm)	0	12
#40	(0.425 mm)	2	60
#50	(0.300 mm)	5	60
#70	(0.212 mm)	5	60
#100	(0.150 mm)	5	30
#140	(0.106 mm)	0	10
#200	(0.075 mm)	0	2
Finer than #200		0	0.3

* Table 1 represents the maximum range of aggregate gradations.
In all cases the refined coal tar emulsion supplier is to give written approval of the aggregate used in the mix design.

603-2.3 Water. Water for mixing shall be potable, free of harmful soluble salts and at least 50ºF (10ºC).

603-2.4 Crack Sealant. Crack sealant shall be certified for compatibility with the refined coal tar emulsion by the manufacturer of the refined coal tar emulsion, and approved by the engineer.

603-2.5 Oil Spot Primer. Oil spot primer shall be certified for compatibility with the refined coal tar emulsion by the manufacturer of the refined coal tar emulsion, and approved by the engineer.

603-2.6 Pavement Primer. Pavement primer shall be certified for compatibility with the refined coal tar emulsion by the manufacturer of the refined coal tar emulsion, and approved by the engineer.

COMPOSITION AND APPLICATION

630-3.1 Composition. The refined coal tar emulsion seal coat is to consist of a mixture of refined coal tar emulsion, water and aggregate, and be proportioned as shown in Table 2. The composition must have written approval of the coal tar emulsion manufacturer.

630-3.2 Job Mix Formula. The contractor shall submit the recommended formulation of water, emulsion, aggregate and application rate proposed for use to a testing laboratory together with sufficient materials to verify the

formulation at least **[ ]** days prior to the start of operations. The mix design shall be within the range shown in Table 2. No seal coat shall be produced for payment until a job mix formula has been approved by the Engineer. The formulation shall pass the fuel resistance test in Appendix A.

The job mix formula for each mixture shall be in effect until modified in writing by the Engineer.

* * * *

The test section shall be used to verify the adequacy of the mix design and to determine the application rate. The same equipment and method of operations shall be used on the test section as will be used on the remainder of the work.

If the test section should prove to be unsatisfactory, the necessary adjustments to the job mix formula, mix composition, application rate, placement operations, and equipment shall be made. Additional test sections shall be placed and evaluated, if required. Full production shall not begin without the Engineer's approval. Acceptable test sections shall be paid for in accordance with paragraph 630-7.1.

* * * *

the specified rate of application. The spreader box shall have an adjustable width. The box shall be kept clean; coal-tar emulsion and aggregate build-up on the box shall not be permitted.

d. Hand Squeegee or Brush Application. The use of hand spreading application shall be restricted to places not accessible to the mechanized equipment or to accommodate neat trim work at curbs, etc. Material that is applied by hand shall meet the same standards as that applied by machine.

e**. Calibration.** The Contractor shall furnish all equipment, materials and labor necessary to calibrate the equipment. It shall be calibrated to assure that it will produce and apply a mix that conforms to the job mix formula. Commercial equipment should be provided with a method of calibration by the manufacturer. All calibrations shall be made with the approved job materials prior to applying the seal coat to the pavement. A copy of the calibration test results shall be furnished to the Engineer.

630-4.3 Preparation of Existing Asphalt Pavement Surfaces. Existing asphalt pavements indicated to be seal coated shall be prepared as follows:

- Patch bituminous pavement surfaces that have been softened by petroleum derivatives or have failed due to any other cause. Remove damaged pavement to the full depth of the damage and replace with new bituminous concrete similar to that of the existing pavement. If a solvent containing cold-applied material is used, complete patching a minimum of 90 days prior to the planned application of the sealer to permit solvent to escape before sealing.

- Remove all vegetation and debris from cracks to a minimum depth of 1″. If extensive vegetation exists treat the specific area with a concentrated solution of a water-based herbicide approved by the engineer. Fill all cracks, ignoring hairline cracks (< 1/4″ wide) with a crack sealant. Wider cracks (over 1½″ wide (38.4 mm)), along with soft or sunken spots, indicate that the pavement or the pavement base should be repaired or replaced as stated above.

- Clean pavement surface immediately prior to placing the prime coat or seal coat by sweeping, flushing well with water leaving no standing water, or a combination of both, so that it is free of dust, dirt, grease, vegetation, oil or any type of objectionable surface film.

- Remove oil or grease that has not penetrated the asphalt pavement by scraping or by scrubbing with a detergent, then wash thoroughly with clean water. After cleaning, treat these areas with the oil spot primer.

- To insure adhesion to sound but oxidized pavements, mix and apply a prime coat of a type and at a rate recommended by the coal tar emulsion manufacturer, after all loose aggregate is removed.

630-4.4 Preparation of New Asphalt Pavement Surfaces. New asphalt pavements indicated to be seal coated shall be prepared as follows:

- Cure new asphalt pavement surfaces so that there is no concentration of oils on the surface.

- A period of at least 60 days at +70ºF daytime temperatures must elapse between the placement of a hot mixed asphalt concrete surface course and the application of the seal coat.

- Perform a water-break-free test to confirm that the surface oils have degraded and dissipated. (Cast one gallon of clean water out over the surface. The water should sheet out and wet the surface uniformly without crawling or showing oil rings.) If asphalt does not pass this test, additional time must be allowed for extra curing and retesting prior to sealing.

- Clean pavement surface immediately prior to placing the prime coat or seal coat by sweeping, flushing well with water leaving no standing water, or a combination of both, so that it is free of dust, dirt, grease, vegetation, oil or any type of objectionable surface film.

- Where oil spot priming is needed, remove oil or grease that has not penetrated the asphalt pavement by scraping or by scrubbing with a detergent, then wash thoroughly with clean water. After cleaning, treat these areas with the oil spot primer.

630-4.5 Mixing. Blend the coal tar emulsion mixture in the equipment described in paragraph 630-4.2 using the ingredients described in Table 2. The mixing must produce a smooth homogeneous mixture of uniform consistency. (Consult coal tar emulsion supplier for its recommended order of addition of the ingredients.) During the entire mixing and application process, no breaking, segregating or hardening of the emulsion, nor balling or lumping of the sand is to be permitted. Continue to agitate the seal coat mixture in the mixing tank at all times prior to and during application so that a consistent mix is available for application.

Small additional increments of water may be needed to provide a workable consistency, but in no case is the water content to exceed the specified amount.

630-4.6 Application of Slurry Seal Coat. The aggregate filled slurry seal coat shall be applied at a uniform rate determined in paragraph 630-3.4.

In order to provide maximum adhesion, the pavement shall be dampened with a fog spray of water if recommended by the supplier. No standing water shall remain on the surface.

If a prime coat is required, mix and apply the prime coat as specified in paragraph 630-4.3 for existing pavements or paragraph 630-4.4 for new pavements.

Apply the first coat uniformly to obtain the rate determined in paragraph 630-3.4.

Each coat shall be allowed to dry and cure initially before applying any subsequent coats. The initial drying shall allow evaporation of water of the applied mixture, resulting in the coating being able to sustain light foot traffic. The initial curing shall enable the mixture to withstand vehicle traffic without damage to the seal coat.

Apply the second coat in the same manner as outlined for the first coat.

Additional coats shall be applied over the entire surface as directed by the engineer.

The finished surface shall present a uniform texture.

The final coat shall be allowed to dry a minimum of eight hours in dry daylight conditions before opening to traffic, and initially cure enough to support vehicular traffic without damage to the seal coat.

Where marginal weather conditions exist during the eight hour drying time, additional drying time shall be required. The length of time shall be as specified by the supplier. The surface shall be checked after the additional drying time for trafficability before opening the section to vehicle traffic.

Where striping is required, the striping paint utilized shall meet the requirements of P-620, shall be compatible with the seal coat and as recommended by the coal tar emulsion manufacturer.

QUALITY CONTROL

630-5.1 CONTRACTOR'S CERTIFICATION. The Contractor shall furnish the manufacturer's certification that each consignment of emulsion shipped to the project meets the requirements of Federal specification R-P-355, except that the water content shall not exceed 50 percent. The certification shall also indicate the solids and ash content of the emulsion and the date the tests were conducted. The certification shall be delivered to the Engineer prior to the beginning of work. The manufacturer's certification for the emulsion shall not be interpreted as a basis for final acceptance. Any certification received shall be subject to verification by testing samples received for project use.

The Contractor shall also furnish a certification demonstrating a minimum of three years' experience in the application of coal-tar emulsion seal coats.

630-5.2 INSPECTION. The Owner shall have an independent technical consultant on the job site at the beginning of operations for application of coal-tar emulsion seal coats. The consultant shall have knowledge of the materials, procedures, and equipment described in this specification and shall assist the Contractor regarding proper mixing of the component materials and application of the seal coat. The consultant shall have a minimum of 3 years' experience in the use of coal-tar seal coats. Documentation of this experience shall be furnished to the Engineer prior to the start of operations. The cost of the technical consultant shall be paid for by the Owner.

630-5.3 SAMPLING. A minimum of one sample per day shall be tested for the properties of Table 2. A random sample of approximately one-quart of the composite mix will be obtained daily by the contractor and stored in a glass container. The containers shall be sealed against contamination and retained in storage by the Owner for a period of six months. Samples shall be stored at room temperature and not be subjected to freezing temperatures.

A sample of undiluted coal-tar emulsion shall be obtained from each consignment shipped to the job.

630-5.4 ENGINEER'S RECORDS. The Engineer will keep an accurate record of each batch of materials used in the formulation of the seal coat.

METHOD OF MEASUREMENT

630-6.1 The refined coal tar emulsion shall be measured by the **[gallon (liter)] [ton (kg)]**. Only the actual quantity of undiluted refined coal tar emulsion will be measured for payment.

630-6.2 Aggregate shall be measured by the ton (kg) of dry aggregate.

BASIS OF PAYMENT

630-7.1 Payment shall be made at the contract unit price per **[gallon (liter)] (ton (kg)]** for the refined coal tar emulsion and at the contract price per ton (kg) for aggregate.

These prices shall be full compensation for furnishing all materials, preparing, mixing, and applying these materials, and for all labor, equipment, tools, and incidentals necessary to complete the item.

Payment will be made under:

Item P-630-7.1	Refined Coal Tar Emulsion for Slurry Coat—per [gallon (liter)] [ton (kg)]
Item P-630-7.2	Aggregate—per ton (kg) of dry aggregate.

TESTING REQUIREMENTS

ASTM C 67	Sampling and Testing Brick and Structural Clay Tile
ASTM C 136	Sieve or Screen Analysis of Fine and Coarse Aggregates
ASTM D 160	Practice of Sampling Bituminous Materials
ASTM D 2939	Standard Test Methods for Emulsified Bitumens used as Protective Coatings.

MATERIAL REQUIREMENTS

ASTM D 490	Standard Specification for Road Tar

ASTM D 692	Standard Specification for Coarse Aggregate for Bituminous Paving Mixtures
ASTM C 3699	Kerosene
ASTM D 4866	Standard Performance Specification for Coal Tar Pitch Emulsion Pavement Sealer Mix Formations Containing Mineral Aggregates and Optional Polymeric Admixtures
ASTM D 5727	Emulsified Refined Coal Tar (Mineral Colloid Type)
FED SPEC R-P-355	Pitch, Coal-tar Emulsion (Coating for Bituminous Pavements) ASTM D 5727 Emulsified Refined Coal Tar (Mineral Colloid Type)

APPENDIX A

FUEL RESISTANCE TEST

ITEM P-630

FUEL RESISTANCE TEST ITEM P-630
TEST METHODS CRITERION

1. Scope

This method determines the resistance of the coal tar emulsion seal coat to kerosene.

2. Apparatus

2.1 2 6″ X 6″ square 16 gauge sheet metal masks with a 4″ × 4″ square center removed.
2.2 6″ X 6″ unglazed white ceramic tile with an absorption rate of 10-18 percent (determined in accordance with ASTM C 67.
2.3 Brass ring, 2″ diameter and 2″ high.
2.4 Kerosene meeting requirements of ASTM D 3699.
2.5 Silicone rubber sealant.

3. Procedure

3.1 Immerse the ceramic tile in distilled water for a minimum of ten minutes.
3.2 Remove excess water from the tile to produce a damp surface before applying the seal coat.
3.3 Using the mask described in 2.1 apply one layer of the coal tar emulsion mixture to the tile. Spread even with the top of the mask using a spatula or other straight edge.
3.4 Allow the sample to cure for 96 hours at 77 ± 2 degrees F. and 50 ± 10 percent relative humidity.
3.5 Position a second mask on top of the first mask.
3.6 Apply a second coat of coal tar emulsion mixture. Spread even with the top of the second mask.
3.7 Cure as in step 3.4.
3.8 After curing, affix the brass ring to the seal coat on the tile with silicone rubber sealant.
3.9 Fill the brass ring with kerosene.
3.10 After 24 hours, remove the kerosene from the brass ring, blot dry and immediately examine the film for softness and loss of adhesion. Immediately after the film is examined, break the tile in half, exposing that part of the tile whose film was subjected to the kerosene.
3.11 Evaluate for penetration of kerosene through the sealer and loss of adhesion.

4. Report

4.1 Report the results as pass or fail. Visible evidence of leakage or discoloration shall constitute failure of the test.

Criterion: A “pass” rating in the fuel resistance test is required.

END OF ITEM P-630

ITEM P-631 REFINED COAL TAR EMULSION WITH ADDITIVES, SLURRY SEAL SURFACE TREATMENT

631-1.1 GENERAL. This item shall consist of a mixture of refined coal tar emulsion, mineral aggregate, additives, and water properly proportioned, mixed and applied as a slurry seal on new or existing (aged) asphalt concrete pavement.

MATERIALS

631-2.1 Refined Coal Tar Emulsion. A refined coal tar emulsion prepared from a high temperature refined coal tar conforming to the requirements of ASTM specification D 490 for grade 11-12. The use of oil and water gas tar is not allowed. Base refined coal tar emulsion must conform to all requirements of Federal Specification R-P-355.

631-2.2 Aggregate. The aggregate shall be washed dry silica sand or boiler slag free of dust, trash, clay, organic materials or other deleterious substances. The aggregate shall meet the gradation in Table 1, when tested in accordance with ASTM C 136.

TABLE 1. GRADATION OF AGGREGATES*

Sieve Size		Percent Retained	
		Minimum	Maximum
#20 or coarser	(0.850 mm)	0	2
#30	(0.600 mm)	0	12
#40	(0.425 mm)	2	60
#50	(0.300 mm)	5	60
#70	(0.212 mm)	5	60
#100	(0.150 mm)	5	30
#140	(0.106 mm)	0	10
#200	(0.075 mm)	0	2
Finer than #200		0	0.3

* Table 1 represents the maximum range of aggregate gradations.
In all cases the refined coal tar emulsion supplier is to give written approval of the aggregate used in the mix design.

631-2.3 Additive. As specified by the coal tar emulsion manufacturer.

* * * *

631-2.5 Crack Sealant. Crack sealant shall be certified for compatibility with the refined coal tar emulsion by the manufacturer of the refined coal tar emulsion, and approved by the engineer.

631-2.6 Oil Spot Primer. Oil spot primer shall be certified for compatibility with the refined coal tar emulsion by the manufacturer of the refined coal tar emulsion, and approved by the engineer.

631-2.7 Pavement Primer. Pavement primer shall be certified for compatibility with the refined coal tar emulsion by the manufacturer of the refined coal tar emulsion, and approved by the engineer.]

COMPOSITION AND APPLICATION

631-3.1 Composition. The refined coal tar emulsion seal coat is to consist of a mixture of refined coal tar emulsion, water, additive and aggregate, and be proportioned as shown in Table 2. The composition must have written approval of the coal tar emulsion manufacturer.

631-3.2 Job Mix Formula. The contractor shall submit the recommended formulation of water, emulsion, aggregate and application rate proposed for use to a testing laboratory together with sufficient materials to verify the formulation at least **[ ]** days prior to the start of operations. The mix design shall be within the range shown in Table 2. No seal coat shall be produced for payment until a job mix formula has been approved by the Engineer. The formulation shall pass the fuel resistance test in Appendix A.

The job mix formula for each mixture shall be in effect until modified in writing by the Engineer.

* * * *

Some specifications covering this type of coating have allowed sand loadings in excess of 10 pounds per gallon of refined coal tar emulsion. These coatings have not performed well in the field due to poor fuel resistance and loss of adhesion and are not recommended.

* * * *

The mix tank shall have a mechanically powered, full-sweep, mixer with sufficient power to move and homogeneously mix the entire contents of the tank.

The distributor shall be equipped with a positive placement pump so that a constant pressure can be maintained on the mixture to the spray nozzles.

b. Mixing Equipment. The mixing machine shall have a continuous flow mixing unit capable of accurately delivering a predetermined proportion of aggregate, water, and emulsion, and of discharging the thoroughly mixed product on a continuous basis. The mixing unit shall be capable of thoroughly blending all ingredients together and discharging the material to the spreader box without segregation.

c. Spreading Equipment. Spreading equipment shall be a mechanical-type squeegee distributor attached to the mixing machine, equipped with flexible material in contact with the surface to prevent loss of slurry from the spreader box. It shall be maintained to prevent loss of slurry on varying grades and adjusted to assure uniform spread. There shall be a lateral control device and a flexible strike-off capable of being adjusted to lay the slurry at the specified rate of application. The spreader box shall have an adjustable width. The box shall be kept clean; coal-tar emulsion and aggregate build-up on the box shall not be permitted.

d. Hand Squeegee or Brush Application. The use of hand spreading application shall be restricted to places not accessible to the mechanized equipment or to accommodate neat trim work at curbs, etc. Material that is applied by hand shall meet the same standards as that applied by machine.

e. Calibration. The Contractor shall furnish all equipment, materials and labor necessary to calibrate the equipment. It shall be calibrated to assure that it will produce and apply a mix that conforms to the job mix formula. Commercial equipment should be provided with a method of calibration by the manufacturer. All calibrations shall be made with the approved job materials prior to applying the seal coat to the pavement. A copy of the calibration test results shall be furnished to the Engineer.

631-4.3 Preparation Of Existing Asphalt Pavement Surfaces. Existing asphalt pavements indicated to be seal coated shall be prepared as follows:

- Patch bituminous pavement surfaces that have been softened by petroleum derivatives or have failed due to any other cause. Remove damaged pavement to the full depth of the damage and replace with new bituminous concrete similar to that of the existing pavement. If a solvent containing cold-applied material is used, complete patching a minimum of 90 days prior to the planned application of the sealer to permit solvent to escape before sealing.

- Remove all vegetation and debris from cracks to a minimum depth of 1″. If extensive vegetation exists treat the specific area with a concentrated solution of a water-based herbicide approved by the engineer. Fill all cracks, ignoring hairline cracks (< 1/4″ wide) with a crack sealant. Wider cracks (over 1½″ wide (38.4 mm)), along with soft or sunken spots, indicate that the pavement or the pavement base should be repaired or replaced as stated above.

- Clean pavement surface immediately prior to placing the prime coat or seal coat by sweeping, flushing well with water leaving no standing water, or a combination of both, so that it is free of dust, dirt, grease, vegetation, oil or any type of objectionable surface film.

- Remove oil or grease that has not penetrated the asphalt pavement by scraping or by scrubbing with a detergent, then wash thoroughly with clean water. After cleaning, treat these areas with the oil spot primer.

- To insure adhesion to sound but oxidized pavements, mix and apply a prime coat of a type and at a rate recommended by the coal tar emulsion manufacturer, after all loose aggregate is removed.

631-4.4 Preparation Of New Asphalt Pavement Surfaces. New asphalt pavements indicated to be seal coated shall be prepared as follows:

- Cure new asphalt pavement surfaces so that there is no concentration of oils on the surface.
- A period of at least 60 days at +70ºF daytime temperatures must elapse between the placement of a hot mixed asphalt concrete surface course and the application of the seal coat.
- Perform a water-break-free test to confirm that the surface oils have degraded and dissipated. (Cast one gallon of clean water out over the surface. The water should sheet out and wet the surface uniformly without crawling or showing oil rings.) If asphalt does not pass this test, additional time must be allowed for extra curing and retesting prior to sealing.
- Where oil spot priming is needed, remove oil or grease that has not penetrated the asphalt pavement by scraping or by scrubbing with a detergent, then wash thoroughly with clean water. After cleaning, treat these areas with the oil spot primer.
- To ensure adhesion to sound but oxidized pavements, mix and apply a prime coat of a type and at a rate recommended by the coal tar emulsion manufacturer, after all loose aggregate is removed.

631-4.5 MIXING. Blend the coal tar emulsion mixture in the equipment described in paragraph 631-4.2 using the ingredients described in Table 2. The mixing must produce a smooth homogeneous mixture of uniform consistency. (Consult coal tar emulsion supplier for its recommended order of addition of the ingredients.) During the entire mixing and application process, no breaking, segregating or hardening of the emulsion, nor balling or lumping of the sand is to be permitted. Continue to agitate the seal coating mixture in the mixing tank at all times prior to and during application so that a consistent mix is available for application.

Small additional increments of water may be needed to provide a workable consistency, but in no case is the water content to exceed the specified amount.

631-4.6 Application of Slurry Seal Coat. The aggregate filled slurry seal coat shall be applied at a uniform rate determined in paragraph 631-3.4.

In order to provide maximum adhesion, the pavement shall be dampened with a fog spray of water if recommended by the supplier. No standing water shall remain on the surface.

If a prime coat is required, mix and apply the prime coat as specified in paragraph 631-4.3 for existing pavements or paragraph 631-4.4 for new pavements.

Apply the first coat uniformly to obtain the rate determined in paragraph 631-3.4.

Each coat shall be allowed to dry and cure initially before applying any subsequent coats. The initial drying shall allow evaporation of water of the applied mixture, resulting in the coating being able to sustain light foot traffic. The initial curing shall enable the mixture to withstand vehicle traffic without damage to the seal coat.

Apply the second coat in the same manner as outlined for the first coat.

Additional coats shall be applied over the entire surface as directed by the engineer.

The finished surface shall present a uniform texture.

The final coat shall be allowed to dry a minimum of eight hours in dry daylight conditions before opening to traffic, and initially cure enough to support vehicular traffic without damage to the seal coat.

Where marginal weather conditions exist during the eight hour drying time, additional drying time shall be required. The length of time shall be as specified by the supplier. The surface shall be checked after the additional drying time for trafficability before opening the section to vehicle traffic.

Where striping is required, the striping paint utilized shall meet the requirements of P-620, shall be compatible with the seal coat and as recommended by the coal tar emulsion manufacturer.

QUALITY CONTROL

631-5.1 CONTRACTOR'S CERTIFICATION. The Contractor shall furnish the manufacturer's certification that each consignment of emulsion shipped to the project meets the requirements of Federal specification R-P-355, except that the water content shall not exceed 50 percent. The certification shall also indicate the solids and ash content of the emulsion and the date the tests were conducted. The certification shall be delivered to the Engineer prior to the beginning of work. The manufacturer's certification for the emulsion shall not be interpreted as a basis for final acceptance. Any certification received shall be subject to verification by testing samples received for project use.

The Contractor shall also furnish a certification demonstrating a minimum of three years experience in the application of coal-tar emulsion seal coats.

631-5.2 INSPECTION. The Owner shall have an independent technical consultant on the job site at the beginning of operations for application of coal-tar emulsion seal coats. The consultant shall have knowledge of the materials, procedures, and equipment described in this specification and shall assist the Contractor regarding proper mixing of the component materials and application of the seal coat. The consultant shall have a minimum of 3 years experience in the use of coal-tar seal coats. Documentation of this experience shall be furnished to the Engineer prior to the start of operations. The cost of the technical consultant shall be paid for by the Owner.

631-5.3 SAMPLING. A minimum of one sample per day shall be tested for the properties of Table 2. A random sample of approximately one-quart of the composite mix will be obtained daily by the contractor and stored in a glass container. The containers shall be sealed against contamination and retained in storage by the Owner for a period of six months. Samples shall be stored at room temperature and not be subjected to freezing temperatures.

A sample of undiluted coal-tar emulsion shall be obtained from each consignment shipped to the job.

631-5.4 ENGINEER'S RECORDS. The Engineer will keep an accurate record of each batch of materials used in the formulation of the seal coat.

METHOD OF MEASUREMENT

631-6.1 The refined coal tar emulsion with additives shall be measured by the **[gallon (liter)] [ton (kg)]**. Only the actual quantity of undiluted refined coal tar emulsion with additives will be measured for payment.

631-6.2 Aggregate shall be measured by the ton (kg) of dry aggregate.

BASIS OF PAYMENT

631-7.1 Payment shall be made at the contract unit price per **[gallon (liter)] (ton (kg)]** for the refined coal tar emulsion with additives and at the contract price per ton (kg) for aggregate.

These prices shall be full compensation for furnishing all materials, preparing, mixing, and applying these materials, and for all labor, equipment, tools, and incidentals necessary to complete the item.

Payment will be made under:

Item P-631-7.1	Refined Coal Tar Emulsion with Additives for Slurry Coat—per [gallon (liter)] [ton (kg)]
Item P-631-7.2	Aggregate—per ton (kg) of dry aggregate.

TESTING REQUIREMENTS

ASTM C 67	Sampling and Testing Brick and Structural Clay Tile
ASTM C 136	Sieve or Screen Analysis of Fine and Coarse Aggregates
ASTM D 160	Practice of Sampling Bituminous Materials
ASTM D 2939	Standard Test Methods for Emulsified Bitumens used as Protective Coatings.

MATERIAL REQUIREMENTS

ASTM D 490	Standard Specification for Road Tar
ASTM D 692	Standard Specification for Coarse Aggregate for Bituminous Paving Mixtures
ASTM C 3699	Kerosene
ASTM D 4866	Standard Performance Specification for Coal Tar Pitch Emulsion Pavement Sealer Mix Formations Containing Mineral Aggregates and Optional Polymeric Admixtures
FED SPEC R-P-355	Pitch, Coal-tar Emulsion (Coating for Bituminous Pavements) ASTM D 5727 Emulsified Refined Coal Tar (Mineral Colloid Type)

APPENDIX A

FUEL RESISTANCE TEST

ITEM P-631

FUEL RESISTANCE TEST ITEM P-631
TEST METHODS CRITERION

1. Scope

This method determines the resistance of the coal tar emulsion seal coat to kerosene.

2. Apparatus

2.1 2 6″ X 6″ square 16 gauge sheet metal masks with a 4″ × 4″ square center removed.

2.2 6″ X 6″ unglazed white ceramic tile with an absorption rate of 10-18 percent (determined in accordance with ASTM C 67.

2.3 Brass ring, 2″ diameter and 2″ high.

2.4 Kerosene meeting requirements of ASTM D 3699.

2.5 Silicone rubber sealant.

3. Procedure

3.1 Immerse the ceramic tile in distilled water for a minimum of ten minutes.

3.2 Remove excess water from the tile to produce a damp surface before applying the seal coat.

3.3 Using the mask described in 2.1 apply one layer of the coal tar emulsion mixture to the tile. Spread even with the top of the mask using a spatula or other straight edge.

3.4 Allow the sample to cure for 96 hours at 77 ± 2 degrees F. and 50 ± 10 percent relative humidity.

3.5 Position a second mask on top of the first mask.

3.6 Apply a second coat of coal tar emulsion mixture. Spread even with the top of the second mask.

3.7 Cure as in step 3.4.

3.8 After curing, affix the brass ring to the seal coat on the tile with silicone rubber sealant.

3.9 Fill the brass ring with kerosene.

3.10 After 24 hours, remove the kerosene from the brass ring, blot dry and immediately examine the film for softness and loss of adhesion. Immediately after the film is examined, break the tile in half, exposing that part of the tile whose film was subjected to the kerosene.

3.11 Evaluate for penetration of kerosene through the sealer and loss of adhesion.

4. Report

4.1 Report the results as pass or fail. Visible evidence of leakage or discoloration shall constitute failure of the fuel resistance test.

Criterion: A “pass” rating in the fuel resistance test is required prior to full production.

END OF ITEM P-631

PART VIII – FENCING

ITEM F-160 WIRE FENCE WITH WOOD POSTS (CLASSES A AND B FENCES)

DESCRIPTION

160-1.1 This item covers the requirements for furnishing materials and constructing new wire fences and gates with wood posts in accordance with the details included herein and as shown on the plans. The class of fence to be erected shall be either Class A, woven wire fencing surmounted by two strands of barbed wire, or Class B, four strands of barbed wire, as indicated on the plans and in the bid proposal.

MATERIALS

160-2 WIRE.

a. Woven Wire (Zinc-coated). The woven wire fence shall be 7-bar, 26-inch (66 cm) field fence with top and bottom wires No. 10 gauge, and filler and stay wires No. 12 1/2 gauge. Stay wires shall be spaced 6 inches (150 mm) apart. All wires shall be smooth galvanized steel wire, conforming to ASTM A 121, Type B. All wires shall be two-dip and shall be spaced as shown on the plans.

b. Barbed Wire (Zinc-coated). Zinc-coated barbed wire shall be 2-strand twisted No. 12 1/2 gauge galvanized steel wire with 4-point barbs of No. 14 gauge galvanized steel wire. All wire shall conform to ASTM A 121, Type A. The barbs shall be spaced approximately 4 inches (100 mm) apart.

c. Barbed Wire (Copper-covered). Copper-covered steel barbed wire shall conform to ASTM A 121, Type A.

d. Barbed Wire (Aluminum-coated). Aluminum-coated steel-barbed wire shall be 2-strand twisted No. 12 1/2 gauge. The 4-point barbs of No. 14 gauge aluminum-coated steel wire shall be spaced approximately 5 inches (125 mm) apart. The steel wire shall have a tensile strength of between 60,000 and 80,000 pounds per square inch (413 400 and 551 200 kPa), and the aluminum coating shall have a minimum weight of 0.30 ounce per square foot (0.07 kg/square meter) of wire surface on the No. 12 1/2 gauge line wires and 0.25 ounce per square foot (0.06 kg/square meter) of wire surface on the No. 14 gauge barbs.

e. Bracing Wire (Zinc-coated). Wire used for cable for bracing shall be No. 9 smooth galvanized soft wire.

160-2.2 GATES AND HARDWARE. Gates shall be constructed of galvanized steel tubing conforming to Fed. Spec. RR-F-191 and shall be the size shown on the plans. Heavily galvanized hinges and latches for wood posts shall be furnished with each gate. Either a bolt or lag screw hinge shall be used, and either a wing or butterfly latch shall be furnished.

160-2.3 POSTS.

a. Species. All posts shall be one of the following species of wood, unless otherwise noted in the proposal.

Group I	Group II
Cedar	Douglas-fir
Chestnut	Gum, Red
Cypress, Southern	Larch, Western
Locust, Black	Pine, Southern Yellow
Osage-orange	Pine, Lodgepole
Redwood	Tamarack

Yew, Pacific	Ash
Honeylocust	Maple, Sugar
Oak, White	Oak, Red
Mulberry	Spruce
Live Oak	

Posts of Group I may be used untreated, provided at least 75% of the wood is heartwood. Posts of less than 75% heartwood of Group I shall be given a preservative treatment for the part of the post that will have contact with the ground line in accordance with the method specified under subparagraph e(1) below. Posts of Group II shall be given a preservative treatment in accordance with the method specified under subparagraph e(2) below.

b. Quality. Posts shall be peeled, sound, straight-grained, free from decay, cracks, and splits; shakes shall not be in excess of 1/4 inch (6 mm) wide and 3 feet (90 cm) long. Checks (lengthwise separations of the wood in a generally radial direction) are permitted, provided they are not injurious.

c. Dimensions. All posts shall be of the length shown on the plans. Posts shall have the minimum top diameters shown on the plans or as specified. Sawed and split posts are acceptable in lieu of round posts provided their dimensions are such that round posts of required diameter could be turned therefrom.

d. Manufacture. Outer bark shall be completely removed from all posts including depressions. Inner bark shall be removed from all post surfaces to be treated, except inner bark may remain in depressions. The amount of wood shaved off in the removal of inner bark shall be held to a minimum.

e. Treatment.

(1) Butt treatment. All timber shall be thoroughly seasoned and dry (22% maximum moisture content) before applying preservative treatment. The treatment shall be by a process at least equal to a hot and cold bath process. The hot bath temperature shall be from 200 to 230 F (90 to 110 C) for a duration of 45 minutes, and the cold bath temperature not over 120 F (50 C) for a duration of 45 minutes. The preservative shall be either coal-gas tar or coke-oven tar creosote conforming to American Wood Preservers Association (AWPA) Specification No. 4 for Grade 1 creosote; or a 5% minimum, by weight, pentachlorophenol petroleum solution made by either mixing a liquid concentrate of pentachlorophenol in fuel oil or kerosene, or by dissolving pentachlorophenol crystals of technical purity in suitable fuel oil solvents, as specified by AWPA.

(2) Full length treatment. Posts shall be conditioned by air seasoning, steaming, or heating in oil in a manner that prevents injurious checking, splitting, or warping before treating. The treatment, care and preservative shall be in accordance with AWPA.

160-2.4 BRACES. Cleats, gate stops, and braces shall be of the size shown on the plans. They shall be of the same species and quality specified for the posts or approved by the Engineer, and they shall be free from knots larger than one-third the width of the piece. Gate stops shall be made of posts of suitable length. Braces may be made of posts of suitable length or of sawed lumber. All cleats, gate stops, and any braces in contact with the ground and for a distance of at least 6 inches (150 mm) above the ground shall be treated by the hot and cold bath process, specified herein for posts. The wire used in cable for bracing shall conform to 160-2.1e.

160-2.5 STAPLES. The staples shall be No. 9 galvanized steel wire, 1 inch (25 mm) long for hardwood posts and 1-1/2 inches (37 mm) long for use in softwood posts.

CONSTRUCTION METHODS

160-3.1 GENERAL. The fence shall be constructed in accordance with the details on the plans and as specified herein using new materials, and all work shall be performed in a workmanlike manner, satisfactory to the Engineer. Prior to the beginning of the work or upon the request of the Contractor, the Engineer shall locate the position of the work by establishing and marking the property line or fence line. When directed, the Contractor shall span the opening below the fence with barbed wire fastened to posts of extra length at locations of small natural or drainage ditches where it is not practical to conform the fence to the general contour of the ground surface. The new fence

shall be permanently tied to the terminals of existing fences whenever required by the Engineer. The finished fence shall be plumb, taut, true to line and ground contour, and complete in every detail. When directed, the Contractor shall stake down the woven wire fence at several points between posts.

When directed, in order to keep stock on adjoining property enclosed at all times, the Contractor shall arrange the work so that construction of the new fence will immediately follow the removal of existing fences. The length of unfenced section at any time shall not exceed 300 feet (90 m) or such length that the stock can be kept in the proper field. The work shall progress in this manner, and at the close of the working day, the newly constructed fence shall be tied to the unremoved existing fence. Any openings in the fence shall be guarded when stock is using the adjoining property.

160-3.2 CLEARING FENCE LINE. The site of the fence shall be sufficiently clear of obstructions, and surface irregularities shall be graded so that the fence will conform to the general contour of the ground. The fence line shall be cleared to a minimum width of 2 feet (60 cm) on each side of the centerline of the fence. This clearing shall consist of the removal of all stumps, brush, rocks, trees, or other obstructions that will interfere with proper construction of the fence. Stumps within the cleared area of the fence line shall be grubbed or excavated. The bottom of the fence shall be placed a uniform distance above ground as specified in the plans. When shown on the plans or as directed by the Engineer, the existing fences which coincide with, or are in a position to interfere with, the new fence location shall be removed by the Contractor as part of the construction work, unless such removal is listed as a separate item in the bid schedule. All holes remaining after post and stump removal shall be refilled with suitable soil, gravel, or other material acceptable to the Engineer and shall be compacted properly with tampers.

The work shall include the handling and disposal of all material cleared, of excess excavation and the removal of spoiled material regardless of the type, character, composition, or condition of such material encountered.

160-3.3 SETTING POSTS. Posts shall be set with large ends down, plumb, and in good line on the side on which the wire is to be fastened. Posts shall be set full depth and shall not be cut off to eliminate rock or other excavation. Where rock is encountered, it shall be removed, even if blasting is necessary, to provide full-depth and full-size holes. The bottoms of all posts shall be cut off square. The diameter of the holes shall be at least 6 inches (150 mm) larger than the diameter of the posts. When cleats are used on posts, the holes shall be dug large enough to accommodate them. After posts are placed and lined, the holes shall be backfilled with suitable material that shall be properly compacted by the use of tampers. The posts adjacent to end, corner, anchor, and gate posts shall be set and braced with braces and wire, as shown on the plans. No extra compensation shall be made for rock excavation. Rock excavation shall not be grounds for extension of time.

160-3.4 ANCHORING. Corner, end, gate, and adjacent intermediate posts shall be anchored, by gaining and spiking cleats to the sides of the posts, as indicated on the plans. No cleats will be required on other intermediate posts or on anchor posts.

160-3.5 BRACING. End, corner, anchor, and gate posts shall be braced by using a post of sufficient length or a piece of sawed lumber of the proper size, together with a wire cable. The wooden brace shall be gained and securely spiked into the end, corner, anchor, or gate posts and into the next intermediate posts about 6 inches (150 mm) from the top of the respective posts. A cable made of a double strand of galvanized soft wire shall be looped around the end, corner, anchor, or gate post near the ground and around the next intermediate post about 12 inches (300 mm) from the top. After the cable has been stapled in this position, it shall be twisted until tight. The staples used to hold the cable shall be not less than 1-1/2 inches (37 mm) long. The tool used for twisting the cable shall be left in placed to permit later adjustment of bracing if found necessary. Anchor posts shall be set at approximately 500-foot (150 m) intervals and braced to the adjacent posts. Posts shall be braced before the wire fencing is placed.

160-3.6 INSTALLING WIRE. The wires shall be placed on the side of the posts away from the airport or as directed. The wire fence shall be placed on the posts at the height indicated on the plans. Longitudinal wires shall be installed parallel and drawn uniformly taut. The vertical stay wires of the woven wire fencing shall be straight and vertical. At end and gate posts the woven wire and barbed wire shall be wrapped once around the post; each longitudinal wire shall be stapled at least three times and the ends of these wires shall be tied with a snug, tight twist. Each longitudinal wire shall be stapled to each intermediate post with one steel wire staple; at the corner and anchor posts, two or more stapled shall be used. The top strand of barbed wire of all fences shall be stapled with

two staples in each post. All staples shall be set diagonally with the grain of the wood and driven up tight. After the fence has been erected, the tops of the wood posts shall be sawed off with a 1-to-3 pitch. The bottom wire of the wire fencing shall clear the ground by not more than 4 inches (100 mm) or less than 1 inch (25 mm) at any place.

160-3.7 SPLICING WIRE. Wire splices in longitudinal wires will be permitted if made with an approved galvanized bolt-clamp splice or a wire splice made as follows: The end of the wires shall be carried 3 inches (75 mm) past the splice tool and wrapped around the other wire away from the tool for at least six turns in opposite directions. After the tool is removed, the space occupied by it shall be closed by pulling the ends together. The unused ends of the wires shall be cut close to make a neat, workmanlike job. Woven wire shall be spliced only at posts.

160-3.8 INSTALLING GATES. The gates shall be hung on gate fittings, as shown on the plans. Fittings on the gate posts shall be clamped, screwed, or bolted to prevent slipping. Gates shall be so erected as to swing in the direction indicated and shall be provided with gate stops, as specified or as shown on the plans. Gates shall be erected locations shown on the plans.

160-3.9 EXISTING FENCE CONNECTIONS. Wherever the new fence joins an existing fence, either at a corner or at the intersection of straight fence lines, a corner or anchor post shall be set at the junction and braced and anchored the same as herein described for corner posts.

If the connection is made at other than the corner of the new fence, the last span of the old fence shall contain a brace span.

160-3.10 CLEANING UP. The Contractor shall remove from the vicinity of the completed work all tools, buildings, equipment, etc., used during construction.

METHOD OF MEASUREMENT

160-4.1 Fences, Class A (Wood Posts) or Class B (Wood Posts), shall be measured in place from outside to outside of end posts or corner posts and shall be the length of fence actually constructed, except for the space occupied by the gates.

Driveway gates and walkway gates shall be measured in units for each gate installed and accepted.

BASIS OF PAYMENT

160-5.1 Payment will be made at the contract unit price per linear foot (meter) for Class A or Class B wire fence. This price shall be full compensation for furnishing all materials and for preparation, erection, and installation of these materials, and for all labor, equipment, tools and incidentals necessary to complete the item.

Payment will be made at the contract unit price per each for driveway or for walkway gates. This price shall be full compensation for furnishing all materials and for all preparation, erection, and installation of these materials and for all labor, equipment, tools, and necessary incidentals to complete the item.

Payment will be made under:

Item F-160-5.1 Fence, Class A—per linear foot (meter)

Item F-160-5.2 Fence, Class B—per linear foot (meter)

Item F-160-5.3 Driveway Gates—per each

Item F-160-5.4 Walkway Gates—per each

MATERIAL REQUIREMENTS

ASTM A 121	Standard Specification for Zinc Coated (Galvanized) Steel Barbed Wire
FED SPEC RR-F-191/Gen	Fencing, Wire and Post, Metal
AWPA	Specification No. 4 for Grade I Creosote

END OF ITEM F-160

Intentionally Left Blank

ITEM F-161 WIRE FENCE WITH STEEL POSTS (CLASSES C AND D FENCES)

DESCRIPTION

161-1.1 This item covers the requirements for furnishing materials and constructing new wire fences and gates with steel posts in accordance with the details included herein and as shown on the plans. The class of fence to be erected shall be either Class C, woven wire fencing surmounted by two strands of barbed wire, or Class D, four strands of barbed wire, as indicated on the plans and in the bid proposal.

MATERIALS

161-2.1 WIRE.

a. Woven Wire (Zinc-coated). The woven wire fencing shall be 7-bar, 26-inch (66 cm) field fence with top and bottom wires No. 10 gauge, and filler and stay wires No. 12 1/2 gauge. Stay wires shall be spaced 6 inches (150 mm) apart. All wire shall be smooth galvanized steel wire conforming to ASTM A 121, Type B. All wires shall be two-dip and spaced as shown on the plans.

b. Barbed Wire (Zinc-coated). Zinc-coated barbed wire shall be 2-strand twisted No. 12 1/2 gauge galvanized steel wire with 4-point barbs of No. 14 gauge galvanized steel wire. All wire shall conform to ASTM A 121, Type A. The barbs shall be spaced approximately 4 inches (100 mm) apart.

c. Barbed Wire (Copper-covered). Copper-covered steel barbed wire shall conform to ASTM A 121, Type A.

d. Barbed Wire (Aluminum-coated). Aluminum-coated steel barbed wire shall be 2-strand twisted No. 12 1/2 gauge. The 4-point barbs of No. 14 gauge aluminum-coated steel wire shall be spaced approximately 5 inches (125 mm) apart. The steel wire shall have a tensile strength of between 60,000 and 80,000 pounds per square inch (413 400 and 551 200 kPa) and the aluminum coating shall have a minimum weight of .30 ounce per square foot (0.07 kilogram per square meters) of wire surface on the No. 12 1/2 gauge line wire and .25 ounce per square foot (0.06 kg/square meter) of wire surface on the No. 14 gauge barbs.

e. Bracing Wire (Zinc-coated). Wire used for cable for bracing shall be No. 9 smooth galvanized soft wire.

161-2.2 FENCE POSTS, GATES, RAILS, BRACES, AND ACCESSORIES. These items, when specified, shall conform to the requirements of Fed. Spec. RR-F-191 and shall be zinc-coated.

161-2.3 CONCRETE. Concrete shall be of a commercial grade with a minimum 28-day compressive strength of 2500 psi.

CONSTRUCTION METHODS

161-3.1 GENERAL. The fence shall be constructed in accordance with the details on the plans and as specified herein using new materials, and all work shall be performed in a workmanlike manner satisfactory to the Engineer. Prior to the beginning of the work or upon the request of the Contractor, the Engineer shall locate the position of the work by establishing and marking the property line or fence line. When directed, the Contractor shall span the opening below the fence with barbed wire fastened to stakes of the required length at locations of small natural or drainage ditches where it is not practical to conform the fence to the general contour of the ground surface. The new fence shall be permanently tied to the terminals of existing fences whenever required by the Engineer. The finished fence shall be plumb, taut, true to line and ground contour, and complete in every detail. When directed, the Contractor shall stake down the woven wire fence at several points between posts.

When directed, in order to keep stock on adjoining property enclosed at all times, the Contractor shall arrange the work so that construction of the new fence will immediately follow the removal of existing fences. The length of

unfenced section at any time shall not exceed 300 feet (90 m) or such length that the stock can be kept in the proper field. The work shall progress in this manner and at the close of the working day the newly constructed fence shall be tied to the existing fence. Any openings in the fence shall be guarded when stock is using the adjoining property.

161-3.2 CLEARING FENCE LINE. The site of the fence shall be sufficiently cleared of obstructions, and surface irregularities shall be graded so that the fence will conform to the general contour of the ground. The fence line shall be cleared to a minimum width of 2 feet (60 cm) on each side of the centerline of the fence. This clearing shall consist of the removal of all stumps, brush, rocks, trees, or other obstructions that will interfere with proper construction of the fence. Stumps within the cleared area of the fence shall be placed a uniform distance above ground, as specified in the plans. When shown on the plans or as directed by the Engineer, the existing fences which coincide with, or are in a position to interfere with, the new fence location shall be removed by the Contractor as a part of the construction work unless such removal is listed as a separate item in the bid schedule. All holes remaining after post and stump removal shall be refilled with suitable soil, gravel, or other material acceptable to the Engineer and shall be compacted properly with tampers.

The work shall include the handling and disposal of all material cleared, excavated or removed, regardless of the type, character, composition, or condition of such material encountered.

161-3.3 INSTALLING POSTS. All posts shall be spaced as shown on the plans. Corner, brace, anchor, end, and gate posts shall be set in concrete bases as shown on the plans. The top of the base shall be slightly above the ground surface, trowel finished, and sloped to drain. Holes of full depth and size for the concrete bases for posts shall be provided even if blasting of rock or other obstructions is necessary. All line posts may be either driven or set in dug holes to a penetration of 3 feet (90 cm). All post setting shall be done carefully and to true alignment. Dirt removed for placing posts, anchor bars, flanges, etc., shall be replaced, tamped, and leveled. When posts are driven, care shall be exercised to prevent marring or buckling of the posts. Damaged posts shall be replaced at the Contractor's expense. No extra compensation will be made for rock excavation. Rock excavation shall not be grounds for extension of time.

161-3.4 BRACING. All corner, anchor, end, and gate posts shall be braced as shown on the plans. Anchor posts shall be set at approximately 500-foot (150 meters) intervals and braced to the adjacent posts.

161-3.5 INSTALLING WIRE. All barbed wire and woven wire shall be placed on the side of the post away from the airport, or as directed, at the height indicated on the plans. The woven wire shall be carefully stretched and hung without sag and with true alignment. Care shall be taken not to stretch the wire so tightly that it will break in cold weather or pull up corner and brace posts. All horizontal wires shall be fastened securely to each post by fasteners or clips designed for use with the posts furnished. The woven wire shall be wrapped around end, corner, and gate posts, and the ends of all horizontal wires shall be tied with snug, tight twists. The wire shall be secured to prevent slipping up and down the post. Barbed wire strands shall be stretched and each strand secured to each post to prevent slipping out of line or becoming loose. At end, corner, and gate posts the barbed wire shall be securely wrapped and anchored once about the post from outside and secured against slipping by tying the ends with snug, tight twists. However, on spans of less than 100 feet (30 m) both ends of the span need not be wrapped around the posts. The bottom wire of the woven wire fencing shall clear the ground by not more than 4 inches (100 mm) or less than 1 inch (25 mm) at any place.

161-3.6 SPLICING WIRE. Splices in barbed and woven wire will be permitted if made with an approved galvanized bolt-clamp splice or a wire splice made as follows: The ends of each wire shall be carried 3 inches (75 mm) past the splice tool and wrapped around the other wire for at least six turns in opposite directions. After the tool is removed, the space occupied by it shall be closed by pulling the ends together. The unused ends of the wire shall be cut close to make a neat, workmanlike job.

161-3.7 INSTALLING GATES. The gates shall be hung on gate fittings as shown on the plans. They shall be attached in such a manner that the gate cannot be lifted off the hinges. Gates shall be erected to swing in the direction indicated and shall be provided with gate stops, as specified or as shown on the plans. Gates shall be erected at locations shown on the plans.

161-3.8 EXISTING FENCE CONNECTIONS. Wherever the new fence joins an existing fence, either at a corner or at the intersection of straight fence lines, a corner or anchor post shall be set at the junction and braced and anchored the same as herein described for corner posts.

If the connection is made at other than the corner of the new fence, the last span of the old fence shall contain a brace span.

161-3.9 CLEANING UP. The Contractor shall remove from the vicinity of the completed work all tools, buildings, equipment, etc., used during construction.

METHOD OF MEASUREMENT

161-4.1 Fences, Class C (Steel Posts), or Class D (Steel Posts), shall be measured in place from outside to outside of end posts or corner posts and shall be the length of fence actually constructed, except for the space occupied by the gates.

Driveway gates and walkway gates shall be measured in units for each gate installed and accepted.

BASIS OF PAYMENT

161-5.1 Payment shall be made at the contract unit price per linear foot (meter) for Class C or Class D wire fence. This price shall be full compensation for furnishing all materials and for all preparation, erection, and installation of these materials, and for all labor, equipment, tools, and incidentals necessary to complete the item.

Payment will be made at the contract unit price per each for driveway or for walkway gates. This price shall be full compensation for furnishing all materials and for all preparation, erection, and installation of these materials, and for all labor, equipment, tools, and incidentals necessary to complete the item.

Payment will be made under:

Item F-161-5.1	Fence, Class C—per linear foot (meter)
Item F-161-5.2	Fence, Class D—per linear foot (meter)
Item F-161-5.3	Driveway Gates—per each
Item F-161-5.4	Walkway Gates—per each

MATERIAL REQUIREMENTS

ASTM A 121	Standard Specification for Zinc Coated (Galvanized) Steel Barbed Wire
FED SPEC RR-F-191/Gen	Fencing, Wire, and Post, Metal

END OF ITEM F-161

Intentionally Left Blank

ITEM F-162 CHAIN-LINK FENCES

DESCRIPTION

162-1.1 This item shall consist of furnishing and erecting a chain-link fence in accordance with these specifications and the details shown on the plans and in conformity with the lines and grades shown on the plans or established by the Engineer.

MATERIALS

162-2.1 FABRIC. **[The fabric shall be woven with a 9-gauge [galvanized steel wire] [polyvinyl chloride (PVC)-coated steel] [aluminum alloy] [zinc-5% aluminum mischmetal] wire in a 2-inch (50 mm) mesh and shall meet the requirements of [ ].] [The fabric shall be woven from a [ ] gauge aluminum-coated steel wire in a 2-inch (50 mm) mesh and shall conform to the requirements of ASTM A 491.]**

* * * *

[Hot-Rolled Shapes (H Beams) shall meet the requirements of Group III, and be galvanized in accordance with the requirements of F 1043, Type A.]

[Aluminum Pipe shall conform to the requirements of Group IB.]

[Aluminum Shapes shall conform to the requirements of Group IIB.]

[Vinyl or polyester coated steel shall conform to the requirements of ASTM F 1043, Paragraph 7.3 Optional Supplemental Color Coating.]

[Composite posts shall conform to the strength requirements of ASTM F 1043 or ASTM F 1083. The strength loss of composite posts shall not exceed 10 percent when subjected to 3,600 hours of exposure to light and water in accordance with ASTM G 23, ASTM G 26, and ASTM G-53.]

Posts, rails, and braces furnished for use in conjunction with aluminum alloy fabric shall be aluminum alloy or composite.

Posts, rails, and braces, with the exception of galvanized steel conforming to F 1043 or ASTM F 1083, Group 1A, Type A, or aluminum alloy, shall demonstrate the ability to withstand testing in salt spray in accordance with ASTM B 117 as follows:

External: 1,000 hours with a maximum of 5% red rust.
Internal: 650 hours with a maximum of 5% red rust.

The dimensions of the posts, rails, and braces shall be in accordance with Tables I through VI of Fed. Spec. RR-F-191/3.

162-2.4 GATES. Gate frames shall consist of **[galvanized steel pipe] [polymer-coated steel pipe] [aluminum alloy pipe] [composite posts]** and shall conform to the specifications for the same material under paragraph 162-2.3. The fabric shall be of the same type material as used in the fence.

162-2.5 WIRE TIES AND TENSION WIRES. Wire ties for use in conjunction with a given type of fabric shall be of the same material and coating weight identified with the fabric type. Tension wire shall be 7-gauge marcelled steel wire with the same coating as the fabric type and shall conform to ASTM A 824.

All material shall conform to Fed. Spec. RR-F-191/4.

162-6 MISCELLANEOUS FITTINGS AND HARDWARE. Miscellaneous steel fittings and hardware for use with **[zinc-coated] [aluminum-coated] [zinc-5% aluminum-mischmetal alloy-coated]** steel fabric shall be of commercial grade steel or better quality, wrought or cast as appropriate to the article, and sufficient in strength to provide a balanced design when used in conjunction with fabric posts, and wires of the quality specified herein. **[All steel fittings and hardware shall be protected with a zinc coating applied in conformance with ASTM A 153.] [Miscellaneous aluminum fittings for use with aluminum alloy fabric shall be wrought or cast aluminum alloy.]** Barbed wire support arms shall withstand a load of 250 pounds (113 kg) applied vertically to the outermost end of the arm.

162-2.7 CONCRETE. Concrete shall be of a commercial grade with a minimum 28-day compressive strength of 2500 psi (17 240 kPa).

162-2.8 MARKING. Each roll of fabric shall carry a tag showing the kind of base metal (steel, aluminum, or aluminum alloy number), kind of coating, the gauge of the wire, the length of fencing in the roll, and the name of the manufacturer. Posts, wire, and other fittings shall be identified as to manufacturer, kind of base metal (steel, aluminum, or aluminum alloy number), and kind of coating.

CONSTRUCTION METHODS

162-3.1 CLEARING FENCE LINE. All trees, brush, stumps, logs, and other debris which would interfere with the proper construction of the fence in the required location shall be removed a minimum width of 2 feet (61 cm) on each side of the fence centerline before starting fencing operations. The cost of removing and disposing of the material shall not constitute a pay item and shall be considered incidental to fence construction.

162-3.2 INSTALLING POSTS. All posts shall be set in concrete at the required dimension and depth and at the spacing shown on the plans.

* * * *

The Engineer shall specify if tension wire is to be installed.

* * * *

ASTM A 653	Specification for Steel Sheet, Zinc-Coated (Galvanized) or Zinc-Iron Alloy-Coated (Galvannealed) by the Hot-Dip Process
ASTM A 824	Metallic-Coated Steel Marcelled Tension Wire for Use With Chain Link Fence
ASTM A 1011	Steel Sheet and Strip, Hot-Rolled, Carbon, Structural, High-Strength Low-Alloy and High-Strength Low-Alloy with Improved Formability
ASTM B 117	Standard Practice for Operating Salt Spray (Fog) Apparatus
ASTM B 221	Aluminum and Aluminum-Alloy Extruded Bars, Rods, Wire Shapes and Tubes
ASTM B 429	Aluminum-Alloy Extruded Structural Pipe and Tube
ASTM F 668	Poly(vinyl Chloride)(PVC) and other Organic Polymer-Coated Steel Chain-Link Fence Fabric
ASTM F 1043	Strength and Protective Coatings on Metal Industrial Chain Link Fence Framework
ASTM F 1083	Pipe, Steel, Hot-Dipped Zinc-coated (galvanized) Welded, for Fence Structures
ASTM F 1183	Aluminum Alloy Chain Link Fence Fabric
ASTM F 1345	Zinc-5% Aluminum-Mischmetal Alloy-Coated Steel Chain Link Fence Fabric
ASTM G 152	Operating Open Flame (Carbon-Arc) Light Apparatus for Exposure of Nonmetallic Materials
ASTM G 153	Operating Enclosed Carbon-Arc Light Apparatus for Exposure of Nonmetallic Materials
ASTM G 154	Operating Fluorescent Light Apparatus for UV Exposure of Nonmetallic Materials
ASTM G 155	Operating (Xenon- Arc) Light Apparatus for Exposure of Nonmetallic Materials
FED SPEC	Fencing, Wire and Post, Metal (Chain-Link Fence Posts, Top Rails and Braces) RR-F-191/3
FED SPEC	Fencing, Wire and Post, Metal (Chain-Link Fence Accessories) RR-F-191/4

END OF ITEM F-162

Intentionally Left Blank

ITEM F-163 WILDLIFE DETERRENT FENCE

DESCRIPTION

163-1.1 This item shall consist of furnishing and installing chain-link fence fabric underground along an existing chain link fence, constructing concrete pads at existing fence gates in accordance with these specifications and the details shown on the drawings and in conformity with the lines and grades shown on the plans or established by the Engineer.

MATERIALS

163-2.1 CHAIN LINK FENCE FABRIC. The fabric shall be woven with a 9-gauge galvanized steel wire in a 2-inch (50 mm) mesh and shall meet the requirements of ASTM A 392, Class II. The fabric shall be 5'-0" wide.

163-2.2 BARBED WIRE. Barbed wire shall be 2-strand 12-1/2 gauge zinc-coated wire with 4-point barbs and shall conform to the requirements of ASTM A 121, Class 3.

163-2.3 WIRE TIES AND TENSION WIRES. Wire fabric ties, wire ties, and tension wire for use in conjunction with a given type of fabric shall be of the same material identified with the fabric type. The tension wire shall be 7-gauge coiled spring wire coated similarly to the respective wire fabric being used.

Wire fabric ties shall be hog rings of galvanized steel wire not less than 9-gauge.

All material shall conform to Fed. Spec. RR-F-191/4.

163-2.4 MISCELLANEOUS FITTINGS AND HARDWARE. Miscellaneous steel fittings and hardware for use with zinc-coated steel fabric shall be of commercial grade steel or better quality, wrought or cast as appropriate to the article, and sufficient in strength to provide a balanced design when used in conjunction with fabric posts, and wires of the quality specified herein. All steel fittings and hardware shall be protected with a zinc coating applied in conformance with ASTM A 153.

163-2.5 CONCRETE PADS AT GATES. Concrete shall be of a commercial grade with a minimum 28-day compressive strength of 3000 psi.

163-2.6 MARKING. Each roll of fabric shall carry a tag showing the kind of base metal, kind of coating, the gauge of the wire, the length of fencing in the roll, and the name of the manufacturer. Posts, wire, and other fittings shall be identified as to manufacturer, kind of base metal, and kind of coating.

163-2.7 WEED CONTROL MATERIAL. A commercially available weed control material shall be applied at the manufacturer's recommended rate.

CONSTRUCTION METHODS

163-3.1 CLEARING FENCE LINE. All brush, stumps, logs, and other debris which would interfere with the proper construction of the fence in the required location shall be removed a minimum width of 4 feet on the side of the fence centerline before starting fencing operations. The material removed and disposed of shall not constitute a pay item and shall be considered incidental to fence construction.

163-3.2 INSTALLING FABRIC. Excavate ground to the depth required for proper installation of the fabric. Obtain Engineer's approval of depth of excavation before placing the wire fabric. Place the fabric and lap splice it to existing fence fabric and tie with wire ties at 2 foot 0 inch spacing. Cut wire fabric around fence post footing to allow proper placement. Backfill with native soil to original grade. Compact all backfill and fill to attain 90% of AASHTO T-180.

163-3.3 WEED CONTROL APPLICATION. Weed control material shall be applied over an area 3 feet wide, measured from the fence centerline, and over the wildlife fence. Apply weed control material as recommended by the manufacturer's instructions and in compliance with state and local regulations.

METHOD OF MEASUREMENT

163-4.1 CHAIN LINK FENCE FABRIC. Chain-link fence fabric shall be measured for payment by the linear foot to the nearest foot. Measurement shall be along the fence from center to center of end or corner posts, excluding the length occupied by gate openings.

163-4.2 CONCRETE PADS AT GATES. Concrete pads at gates shall be measured by the unit.

163-4.3 BORROW FILL MATERIAL. Borrow material for fill will be furnished by the Contractor. This shall be measured by the cubic yard in place.

163-4.4 WEED CONTROL APPLICATION. Shall be measured by the linear foot.

BASIS OF PAYMENT

163-5.1 CHAIN LINK FENCE FABRIC. Payment for chain-link fence fabric shall be made at the contract unit price per linear foot. This price shall be full compensation for furnishing materials, all labor (including preparation, excavation, backfill, fill, and installation), equipment, tools, and incidentals necessary to complete this item. Utility locates shall be included in this pay item.

163-5.2 CONCRETE PADS AT GATES. Payment for concrete pads at gates shall be made at the contract unit price for each pad. This price shall be full compensation for furnishing materials, all labor (including preparation, excavation, backfill, placement of concrete, reinforcing steel, and forms), equipment, tools, and incidentals necessary to complete this item.

163-5.3 BORROW FILL MATERIAL. Payment for the loading, transporting, and placing of borrow material shall be made at the contract unit price per cubic yard. This price shall be full compensation for furnishing all labor (including placement, compaction, and grading), equipment, tools, and incidentals necessary to complete this item.

163-5.4 WEED CONTROL APPLICATION. Payment for weed control application shall be made at the contract unit price per linear foot. This price shall be full compensation for furnishing materials, all labor, equipment, tools, and incidentals necessary to complete this item.

163-5.5 EXAMPLES OF DETAILS. The following drawings are examples of details for a WILDLIFE DETERRENT FENCE. The fence type and dimensions shown will vary according to specific project design requirements.

* * * *

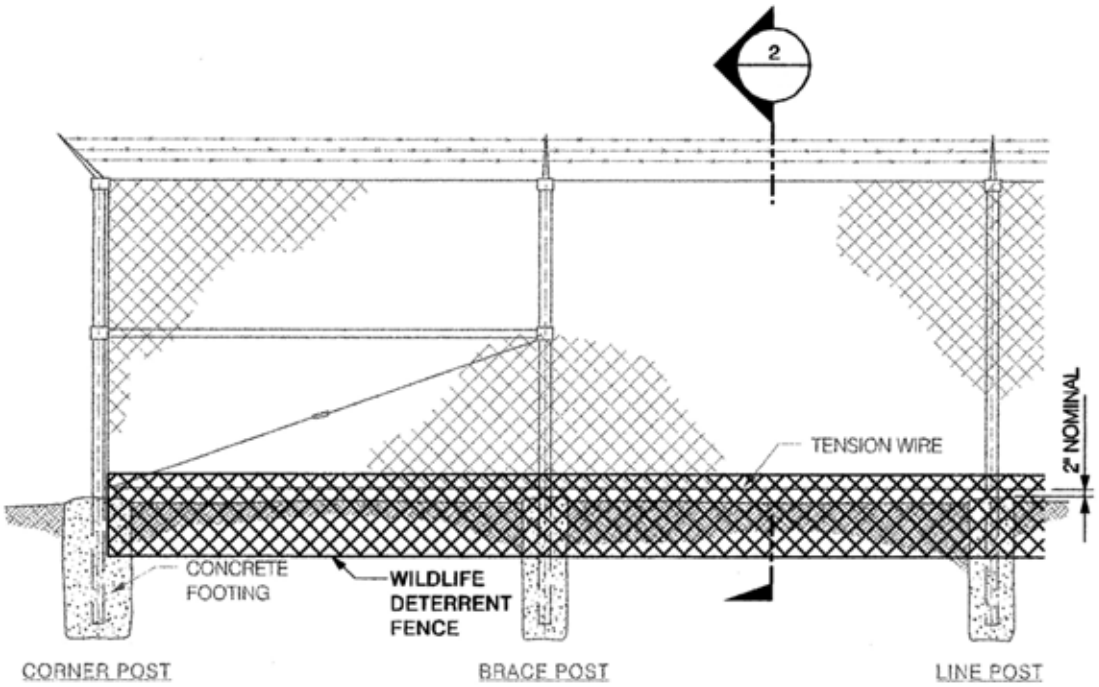

EXISTING SECURITY FENCE
WITH WILDLIFE DETERRENT FENCE

ELEVATION 1
TYPICAL NOT TO SCALE

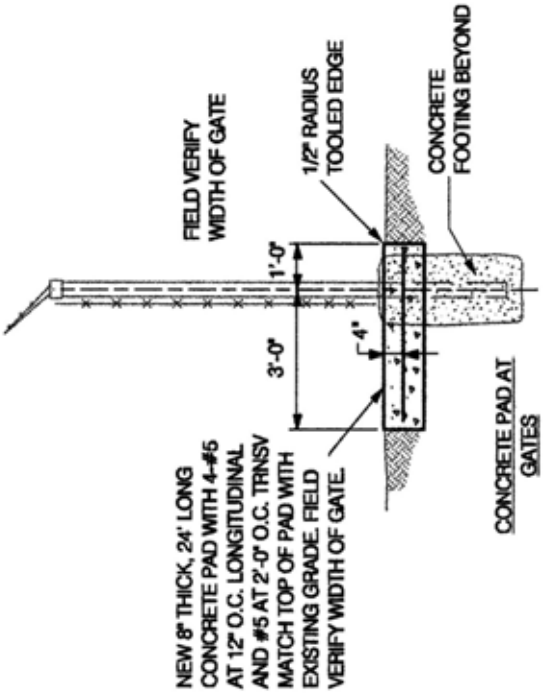

DETAIL 3
TYPICAL NOT TO SCALE

TYPICAL NOTES:

1. MAINTAIN SECURITY FENCE INTEGRITY AT ALL TIMES. DO NOT LEAVE EXCAVATION UNDER FENCE FABRIC WHICH WOULD PERMIT ACCESS.
2. DEPTH OF EXCAVATION SHALL BE INSPECTED AND APPROVED BY THE ENGINEER PRIOR TO PLACEMENT OF THE CHAIN LINK FENCE FABRIC.
3. END JOINTS BETWEEN ADJACENT SECTIONS OF WIRE FABRIC SHALL BE LAPPED 4" AND TIED WITH GALVANIZED WIRE TIES AT 2'-0" O.C. AND AT EDGES.

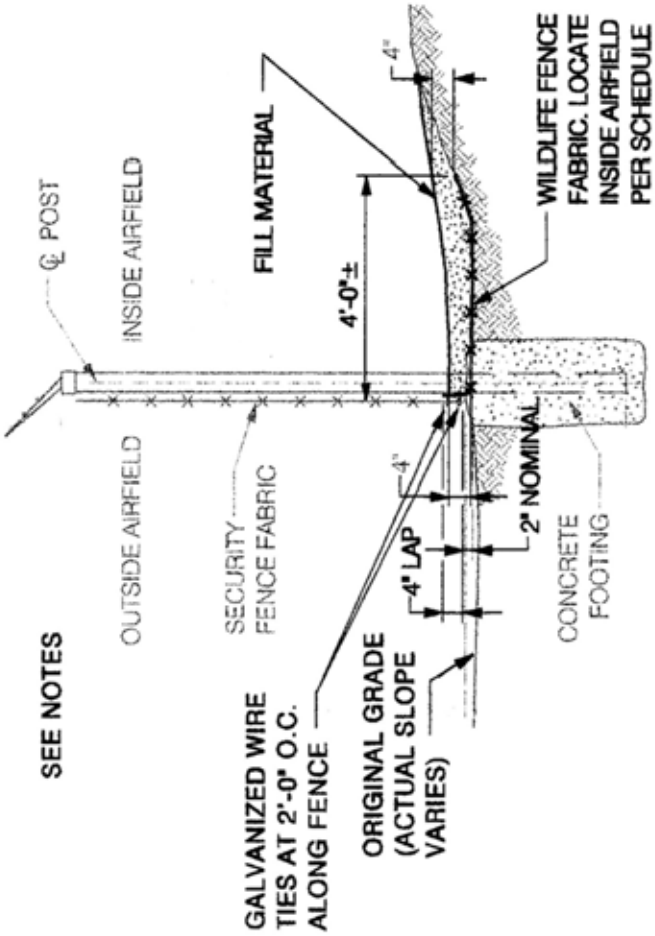

EXISTING SECURITY FENCE
WITH WILDLIFE DETERRENT FENCE

2A

SECTION
TYPICAL NOT TO SCALE

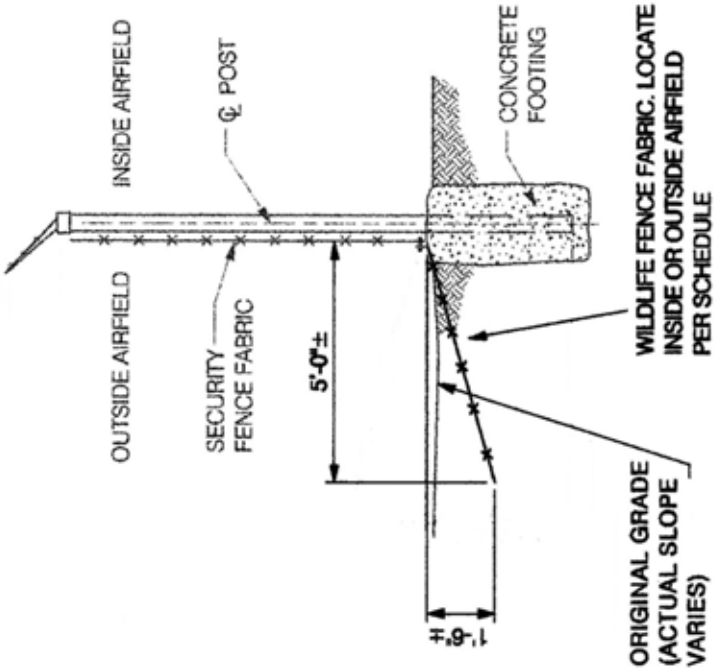

EXISTING SECURITY FENCE
WITH WILDLIFE DETERRENT FENCE
(TYPICAL EXCEPT AS SHOWN ON SECTION 2A)

2

SECTION
TYPICAL NOT TO SCALE

MATERIAL REQUIREMENTS

ASTM A 121	Zinc-Coated (Galvanized) Steel Barbed Wire
ASTM A 123	Zinc (Hot Galvanized) Coatings on Iron and Steel Products
ASTM A 153	Zinc Coating (Hot-Dip) on Iron and Steel Hardware
ASTM A 392	Zinc-Coated Steel Chain-Link Fence Fabric
ASTM A 572	High-Strength Low-Alloy Columbium-Vanadium Structural Steel
ASTM A 1011	Steel, Sheet and Strip Hot-Rolled, Carbon, Structural, High-Strength Low-Alloy and High-Strength Low-Alloy with Improved Formability
ASTM F 1043	Strength and Protective Coatings on Metal Industrial Chain Link Fence Framework
ASTM F 1083	Pipe, Steel, Hot-Dipped Zinc-coated (galvanized) Welded, for Fence Structures
AASHTO T-180	Moisture-Density Relations of Soils Using a 4.54-kg (10-lb) Rammer and a 457-mm (18-in) Drop
FED SPEC RR-F-191/3	Fencing, Wire and Post, Metal (Chain-Link Fence Posts, Top Rails and Braces)
FED SPEC RR-F-191/4	Fencing, Wire and Post, Metal (Chain-Link Fence Accessories)

END OF ITEM F-163

Intentionally Left Blank

PART IX – DRAINAGE

ITEM D-701 PIPE FOR STORM DRAINS AND CULVERTS

DESCRIPTION

701-1.1 This item shall consist of the construction of pipe culverts and storm drains in accordance with these specifications and in reasonably close conformity with the lines and grades shown on the plans.

MATERIALS

701-2.1 Materials shall meet the requirements shown on the plans and specified below.

* * * *

Poly (Vinyl Chloride) (PVC) Corrugated Sewer Pipe With a Smooth Interior and Fittings	ASTM F 949
Bituminous-Coated Corrugated Metal Pipe and Pipe Arches	AASHTO M 190
Bituminous-Coated Corrugated Aluminum Alloy Culvert Pipe	AASHTO M 190 and M 196
Bituminous-Coated Structural Plate Pipe, Pipe Arch, and Arches	AASHTO M 167 and M 243
Aluminum Alloy Structural Plate for Pipe, Pipe Arch, and Arches	AASHTO M 219
Polyvinyl Chloride (PVC) Pipe	ASTM D 3034
Corrugated Polyethylene Drainage Tubing (all types)	AASHTO M 252
Corrugated Polyethylene Pipe 300 to 1200 mm Diameter (all types)	AASHTO M 294M
Poly (Vinyl Chloride) (PVC) Profile Wall Drain Pipe and Fittings Based on Controlled Inside Diameter	AASHTO M 304

* * * *

* * * *

Pipe Corrugation Depth		Minimum Bedding Depth	
in.	mm	in.	mm
1/2	12.5	1	25.0
1	25.0	2	50.0
2	50.0	3	75.0
2-1/2	62.5	3-1/2	87.5

c. PVC and Polyethylene Pipe. For PVC and polyethylene pipe, the bedding material shall consist of coarse sands and gravels with a maximum particle size of 3/4-inch (13 mm). For pipes installed under paved areas, no more than 12 percent of the material shall pass the No. 200 (0.075 mm) sieve. For all other areas, no more than 50 percent of the material shall pass the No. 200 (0.075 mm) sieve. The bedding shall have a thickness of at least 6 inches (150 mm) below the bottom of the pipe and extend up around the pipe for a depth of not less than 50 percent of the pipe's vertical outside diameter.

701-3.3 LAYING PIPE. The pipe laying shall begin at the lowest point of the trench and proceed upgrade. The lower segment of the pipe shall be in contact with the bedding throughout its full length. Bell or groove ends of rigid pipes and outside circumferential laps of flexible pipes shall be placed facing upgrade.

Paved or partially lined pipe shall be placed so that the longitudinal center line of the paved segment coincides with the flow line.

Elliptical and elliptically reinforced pipes shall be placed with the manufacturer's top of pipe mark within five degrees of a vertical plane through the longitudinal axis of the pipe.

701-3.4 JOINING PIPE. Joints shall be made with (1) portland cement mortar, (2) portland cement grout, (3) rubber gaskets, (4) plastic gaskets, or (5) coupling bands.

Mortar joints shall be made with an excess of mortar to form a continuous bead around the outside of the pipe and shall be finished smooth on the inside. Molds or runners shall be used for grouted joints in order to retain the poured grout. Rubber ring gaskets shall be installed to form a flexible watertight seal.

a. Concrete Pipe. Concrete pipe may be either bell and spigot or tongue and groove. The method of joining pipe sections shall be such that the ends are fully entered and the inner surfaces are reasonably flush and even. Joints shall be thoroughly wetted before mortar or grout is applied.

b. Metal Pipe. Metal pipe shall be firmly joined by form fitting bands conforming to the requirements of ASTM A 760 for steel pipe and AASHTO M 196 for aluminum pipe.

c. PVC and Polyethylene Pipe. Joints for PVC and Polyethylene pipe shall conform to the requirements of ASTM D 3212 when water tight joints are required. Joints for PVC and Polyethylene pipe shall conform to the requirements of AASHTO M 304 when soil tight joints are required. Fittings for polyethylene pipe shall conform to the requirements of AASHTO M 252 or M 294M.

701-3.5 BACKFILLING. Pipes shall be inspected before any backfill is placed; any pipes found to be out of alignment, unduly settled, or damaged shall be removed and relaid or replaced at the Contractor's expense.

Material for backfill shall be fine, readily compatible soil, granular material selected from the excavation or a source of the Contractor's choosing**[, or shall meet the requirements of Item P-153].** . It shall not contain frozen lumps, stones that would be retained on a 2-inch (50.0 mm) sieve, chunks of highly plastic clay, or other objectionable material. No less than 95 percent of a granular backfill material shall pass through a 1/2 inch (12 mm) sieve, and no less than 95 percent of it shall be retained on a No. 4 (4.75 mm) sieve.

When the top of the pipe is even with or below the top of the trench, the backfill shall be compacted in layers not exceeding 6 inches (150 mm) on both sides of the pipe and shall be brought up one foot (30 cm) above the top of the

pipe or to natural ground level, whichever is greater. Care shall be exercised to thoroughly compact the backfill material under the haunches of the pipe. Material shall be brought up evenly on both sides of the pipe.

When the top of the pipe is above the top of the trench, the backfill shall be compacted in layers not exceeding 6 inches (150 mm) and shall be brought up evenly on both sides of the pipe to 1 foot (30 cm) above the top of the pipe. The width of backfill on each side of the pipe for the portion above the top of the trench shall be equal to twice the pipe's diameter of 12 feet (3.5 m), whichever is less.

For PVC and polyethylene pipe, the backfill shall be placed in two stages; first to the top of the pipe and then at least 12 inches (300 mm) over the top of the pipe. The backfill material shall meet the requirements of paragraph 701-3.2c.

All backfill shall be compacted to the density required under Item P-152.

METHOD OF MEASUREMENT

701-4.1 The length of pipe shall be measured in linear feet (meters) of pipe in place, completed, and approved. It shall be measured along the centerline of the pipe from end or inside face of structure to the end or inside face of structure, whichever is applicable. The several classes, types and size shall be measured separately. All fittings shall be included in the footage as typical pipe sections in the pipe being measured.

701-4.2 The volume of concrete for pipe cradles to be paid for shall be the number of cubic yards (cubic meters) of concrete that is completed in place and accepted.

701-4.3 The volume of rock to be paid for shall be the number of cubic yards (cubic meters) of rock excavated. No payment shall be made for the cushion material placed for the bed of the pipe.

BASIS OF PAYMENT

701-5.1 Payment will be made at the contract unit price per linear foot (meter) for each kind of pipe of the type and size designated; at the contract unit price per cubic yard (cubic meter) of concrete for pipe cradles; and at the contract unit price per cubic yard (cubic meter) for rock excavation.

These prices shall fully compensate the Contractor for furnishing all materials and for all preparation, excavation, and installation of these materials; and for all labor, equipment, tools, and incidentals necessary to complete the item.

Payment will be made under:

Item 701-5.1	[ ] inch [ ] per linear foot (meter)
Item 701-5.2	Concrete for pipe cradles—per cubic yard (cubic meter)
Item 701-5.3	Rock excavation—per cubic yard (cubic meter)

* * * *

ASTM A 761	Corrugated Steel Structural Plate, Zinc Coated, for Field-Bolted Pipe, Pipe-Arches, and Arches
ASTM A 762	Corrugated Steel-Pipe, Polymer Precoated for Sewers and Drains
ASTM A 849	Post-Applied Coatings, Pavings, and Linings for Corrugated Steel Sewer and Drainage Pipe
ASTM A 885/A 885M-96	Steel Sheet, Zinc and Aramid Fiber Composite Coated for Corrugated Steel Sewer, Culvert, and Underdrain Pipe
ASTM B 745	Corrugated Aluminum Alloy Culvert Pipe
ASTM C 14	Concrete Sewer, Storm Drain, and Culvert Pipe
ASTM C 76	Reinforced Concrete Culvert, Storm Drain, and Sewer Pipe
ASTM C 94	Ready Mixed Concrete
ASTM C 144	Aggregate for Masonry Mortar
ASTM C 150	Portland Cement
ASTM C 443	Joints for Circular Concrete Sewer and Culvert Pipe, Using Rubber Gaskets
ASTM C 506	Reinforced Concrete Arch Culvert, Storm Drain, and Sewer Pipe
ASTM C 507	Reinforced Concrete Elliptical Culvert, Storm Drain and Sewer Pipe
ASTM C 655	Reinforced Concrete D-Load Culvert, Storm Drain and Sewer Pipe
ASTM C 1433	Precast Reinforced Concrete Box Sections for Culverts, Storm Drains, and Sewers
ASTM D 1056	Flexible Cellular Materials—Sponge or Expanded Rubber
ASTM D 3034	Type PSM Poly (Vinyl Chloride) (PVC) Sewer Pipe and Fittings
ASTM D 3212	Joints for Drain and Sewer Plastic Pipes Using Flexible Elastomeric Seals
ASTM D 6690	Joint and Crack Sealants, Hot-Applied, for Concrete and Asphalt Pavements
ASTM F 477	Elastomeric Seals (Gaskets) for Joining Plastic Pipe
ASTM F 794	Poly (Vinyl Chloride) Ribbed Drain Pipe & Fittings Based on Controlled Inside Diameter
ASTM F 949	Poly (Vinyl Chloride) (PVC) Corrugated Sewer Pipe With a Smooth Interior and Fittings
AASHTO M 190	Bituminous-Coated Corrugated Metal Culvert Pipe and Pipe Arches
AASHTO M 196	Corrugated Aluminum Alloy Culverts and Underdrains

AASHTO M 198	Joints for Circular Concrete Sewer and Culvert Pipe Using Flexible Watertight Gaskets
AASHTO M 219	Aluminum Alloy Structural Plate for Pipe, Pipe-Arches, and Arches
AASHTO M 243	Field Applied Coating of Corrugated Metal Structural Plate for Pipe, Pipe-Arches, and Arches
AASHTO M 252	Corrugated Polyethylene Drainage Tubing
AASHTO M 294M	Corrugated Polyethylene Pipe, 300 to 1200 mm Diameter
AASHTO M 304	Poly (Vinyl Chloride) (PVC) Profile Wall Drain Pipe and Fittings Based on Controlled Inside Diameter

END ITEM D-701

Intentionally Left Blank

ITEM D-702 SLOTTED DRAINS

DESCRIPTION

702-1.1 This item shall consist of the construction of steel slotted drains or cast iron slotted vane drains in accordance with these specifications and in reasonably close conformity with the lines and grades shown on the plans. Type detail shall be shown on the plans.

MATERIALS

702-2.1 GENERAL. All slotted drains shall meet the requirements shown on the plans and specified below. All slotted drains shall meet specified hydraulic design requirements and shall support the loadings specified.

702-2.2 PIPE.

a. Steel slotted Drain. Pipe shall be metallic coated (galvanized or aluminized steel type II) corrugated steel type I meeting the requirements of ASTM A760. Pipe diameter and gage shall be as shown on the plans.

The corrugated steel pipe shall have a minimum of two rerolled annular ends.

b. Cast Iron Slotted Vane Drain. Polyvinyl Chloride (PVC) pipe shall meet the requirements of ASTM D 3034. Pipe diameter shall be as shown on the plans. The pipe shall have an open slot to accept the cast iron slotted vane drain castings.

702-2.3 GRATES AND CASTINGS.

a. Steel Slotted Drain. Grates shall be manufactured from ASTM A 36 or A 570, Grade 36 steel. Spacers and bearing bars (sides) shall be 3/16-inch (5 mm) material. The spacers shall be welded to each bearing bar with four 1-1/4-inch long 3/16-inch wide (32 mm long by 5 mm wide) fillet welds on each side of the bearing bar at spacings not exceeding 6 inches (150 mm). The grates shall be 6 inches (150 mm) high or as shown on the plans and shall have a maximum 1-3/4-inch (45 mm) opening in the top.

Grates shall be galvanized in accordance with ASTM A 123 except with a 2 ounce per square foot (0.61 kg per square meter) galvanized coating.

The grates shall be fillet welded to the corrugated steel pipe with a minimum weld 1 inch (25 mm) long on each side of the grate at every other corrugation. Weld areas and the heat affected zones where the slot is welded to the corrugated pipe shall be thoroughly cleaned and painted with a zinc-rich paint in accordance with repair of damaged coatings in ASTM A 760.

Each 20-foot (6.1 m) length of drain delivered to the job site shall be within the following tolerances: vertical bow +/- 3/8 inch (9.5 mm), horizontal bow +/- 5/8 inch (16 mm), twist +/- 1/2 inch (12.5 mm).

b. Cast Iron Slotted Vane Drain. Castings shall meet the requirements of ASTM A 48, Class 35B gray iron. Castings shall be furnished with no coatings.

Castings shall be designed to fit on open slots in 15-inch (380 mm) PVC pipe. Casting sections shall not exceed three feet (915 mm) in length. Casting sections shall have a built-in vane configuration with bar spacings not exceeding 6 inches (150 mm). The opening at the surface shall not exceed 3-3/4 inches (95 mm), and the vane shall be constructed on a radius so that the opening shall be less than 1-1/2 inches (38 mm) at a depth of 1-1/2 inches (38 mm) as measured vertically from the surface. Casting sections shall integrally lock into the concrete by use of top and bottoms flanges and shear tabs. Castings shall accept bolts for bolting sections together and shall accept wire for fitting to pipe.

* * * *

METHOD OF MEASUREMENT

702-4.1 The length of slotted drain shall be measured in linear feet (meters) of slotted drain in place, completed, and approved. It shall be measured along the centerline of the drain from end or inside face of structure to the end or inside face of structure, whichever is applicable. The several classes, types, and sizes shall be measured separately. All fittings shall be included in the footage as typical pipe sections being measured.

BASIS OF PAYMENT

702-5.1 Payment shall be made at the contract unit price per linear foot (meter) for each kind of slotted drain type and size designated and at the contract unit price per cubic yard (cubic meter) of concrete for backfill.

These prices shall be full compensation for all materials, all preparation, excavation and installation of these materials; and all labor, equipment, tools, and incidentals necessary to complete the item.

Payment will be made under:

Item 702-5.1 [ ] inch (mm) diameter [gage] pipe per linear foot (meter)

* * * *

END OF ITEM D-702

ITEM D-705 PIPE UNDERDRAINS FOR AIRPORTS

DESCRIPTION

705-1.1 This item shall consist of the construction of pipe drains in accordance with these specifications and in reasonably close conformity with the lines and grades shown on the plans.

MATERIALS

705-2.1 GENERAL. Materials shall meet the requirements shown on the plans and specified below.

* * * *

TABLE 1. GRADATION OF POROUS BACKFILL

Sieve Designation (square openings)	Percentage by Weight Passing Sieves	
	Porous Material No. 1	Porous Material No. 2
1-1/2 inch (38 mm)		100
1 inch (25 mm)		90 - 100
3/8 inch (9.5 mm)	100	25 - 60
No. 4 (4.75 mm)	95 – 100	5 - 40
No. 8 (2.36 mm)		0 - 20
No. 16 (1.18 mm)	45 – 80	
No. 50 (0.30 mm)	10 – 30	
No. 100 (0.15 mm)	0 – 10	

When two courses of porous backfill are specified in the plans, the finer of the materials shall conform to particle size tabulated herein for porous material No. 1. The coarser granular material shall meet the gradation given in the tabulation for porous material No. 2.

705-2.6. GRANULAR MATERIAL. Granular material used for backfilling shall conform to the requirements of ASTM D 2321 for Class IA, IB, or II materials, or shall meet the requirements of AASHTO Standard Specification for Highway Bridges Section 30.

705-2.7. FILTER FABRIC. The filter fabric shall conform to the requirements of AASHTO M 288-99, Class 2.

TABLE 2

Fabric Property	**Test Method**	**Test Requirement**
Grab Tensile Strength, lbs	**ASTM D 4632**	**125 min**
Grab Tensile Elongation %	**ASTM D 4632**	**50 min**
Burst Strength, psi	**ASTM D 3785**	**125 min**
Trapezoid Tear Strength, lbs	**ASTM D 4533**	**55 min**
Puncture Strength, lbs	**ASTM D 4833**	**40 min**
Abrasion, lbs	**ASTM D 4886**	**15 max loss**
Equivalent Opening Size	**ASTM D 4751**	**70-100**
Permittivity sec^{-1}	**ASTM D 4491**	**0.80**
Accelerated Weathering (UV Stability) (Strength Retained - %)	**ASTM D 4355 *(500 hrs exposure)**	**70**

* * * *

* * * *

b. Metal Pipe. The metal pipe shall be laid with the separate sections joined firmly together with bands, with outside laps of circumferential joints pointing upgrade, and with longitudinal laps on the sides. Any metal in the pipe or bands that is not protected thoroughly by galvanizing shall be coated with a suitable asphaltum paint.

During installation, the asphalt-protected pipe shall be handled without damaging the asphalt coating. Any breaks in the bitumen or treatment of the pipe shall be refilled with the type and kind of bitumen used in coating the pipe originally.

c. PVC or Polyethylene Pipe. PVC or polyethylene pipe shall be installed in accordance with the requirements of ASTM D 2321 or AASHTO Standard Specification for Highway Bridges Section 30. Perforations shall meet the requirements of AASHTO M 252 or M 294 Class 2, unless otherwise indicated on the plans. The pipe shall be laid accurately to line and grade.

d. All Types of Pipe. The upgrade end of pipelines, not terminating in a structure, shall be plugged or capped as approved by the Engineer.

Unless otherwise shown on the plans, a 4-inch (100 mm) bed of granular backfill material shall be spread in the bottom of the trench throughout the entire length under all perforated pipe underdrains.

Pipe outlets for the underdrains shall be constructed when required or shown on the plans. The pipe shall be laid with tight-fitting joints. Porous backfill is not required around or over pipe outlets for underdrains. All connections to other drainage pipes or structures shall be made as required and in a satisfactory manner. If connections are not made to other pipes or structures, the outlets shall be protected and constructed as shown on the plans.

e. Filter Fabric. The filter fabric shall be installed in accordance with the manufacturer's recommendations, or in accordance with AASHTO M 288-99 APPENDIX, unless otherwise shown on the plans.

705-3.4 MORTAR. The mortar shall be of the desired consistency for caulking and filling the joints of the pipe and for making connections to other pipes or to structures. Mortar that is not used within 45 minutes after water has been added shall be discarded. Retempering of mortar shall not be permitted.

705-3.5 JOINTS IN CONCRETE PIPE. When open or partly open joints are required or specified, they shall be constructed as indicated on the plans. The pipe shall be laid with the ends fitted together as designed. If bell and spigot pipe is used, mortar shall be placed along the inside bottom quarter of the bell to center the following section of pipe.

The open or partly open joints shall be surrounded with granular material meeting requirements of porous backfill No. 2 or as indicated on the plans. This backfill shall be placed so its thickness will be not less than 3 inches (75 mm) nor more than 6 inches (150 mm), unless otherwise shown on the plans.

When the original material excavated from the trench is impervious, commercial concrete sand or granular material meeting requirements of porous backfill No. 1 shall surround porous backfill No. 2, as shown on the plans or as directed by the Engineer.

When the original material excavated from the trench is pervious and suitable, it may be used as backfill in lieu of porous backfill No. 1, when indicated on the plans or as directed by the Engineer.

705-3.6 BACKFILLING.

a. Earth. All trenches and excavations shall be backfilled within a reasonable time after the pipes are installed, unless other protection of the pipe is directed. The backfill material shall be selected material from excavation or borrow; material which is placed within a nominal pipe diameter distance at the sides of the pipe and 1 foot (30 cm) over the top shall be material that can be readily compacted. It shall not contain stones retained on a 3-inch (75 mm) sieve, frozen lumps, chunks of highly plastic clay, or any other material that is objectionable to the Engineer. The material shall be moistened or dried, if necessary to be compacted by the method in use. Backfill material shall be

approved by the Engineer. Special care shall be taken in placing the backfill. Great care shall be used to obtain thorough compaction under the haunches and along the sides to the top of the pipe.

The backfill shall be placed in loose layers not exceeding 6 inches (150 mm) in depth under and around the pipe, and not exceeding 8 inches (200 mm) over the pipe. Successive layers shall be added and thoroughly compacted by hand and pneumatic tampers, approved by the Engineer, until the trench is completely filled and brought to the proper elevation. Backfilling shall be done in a manner to avoid injurious top or side pressures on the pipe.

In embankments and for other areas outside of pavements, the backfill shall be compacted to the density required for embankments in unpaved areas under Item P-152. Under paved areas, the subgrade and any backfill shall be compacted to the density required for embankments for paved areas under Item P-152.

b. Granular Material. When granular backfill is required, its placement in the trench and about the pipe shall be as shown on the plans. Special care shall be taken in placing the backfill. The granular backfill shall not contain a damaging amount of foreign matter, nor shall earth from the sides of the trench or from the windrow be allowed to filter into the backfill. When required by the Engineer, a template shall be used to properly place and keep separate the two sizes of backfill. The backfill shall be placed in loose layers not exceeding 6 inches (150 mm) in depth and compacted by hand and pneumatic tampers to the requirements as given for earth backfill. Backfilling shall be done in a manner to avoid injurious top or side pressure on the pipe. The granular backfill shall be made to the elevation of the trench, as shown on the plans.

When perforated pipe is specified, granular backfill material shall be placed along the full length of the pipe. The position of the granular material shall be as shown on the plans. If the original material excavated from the trench is pervious and suitable, it shall be used in lieu of porous backfill No. 1.

When porous backfill is to be placed in paved or adjacent areas prior to the completion of grading or subgrade operations, the backfill material shall be placed immediately after laying the pipe. The depth of this granular backfill shall be not less than 12 inches (300 mm), measured from the top of the underdrain. During subsequent construction operations, this minimum backfill of 12 inches (300 mm) of depth shall not be disturbed until such time as the underdrains are to be completed. When the underdrains are to be completed, the unsuitable material shall be removed until the porous backfill is exposed. That part of the porous backfill that contains objectionable material shall be removed and replaced with suitable material. The cost of removing and replacing any such unsuitable material shall be borne by the Contractor.

Whenever a granular subbase blanket course is to be used under pavements which extends several feet beyond the edge of paving to the outside edge of the underdrain trench, the granular backfill material over the underdrains shall be placed in the trench up to an elevation of 2 inches (50 mm) above the bottom surface of the granular subbase blanket course. Immediately prior to the placing of the granular subbase blanket course, the Contractor shall blade this excess trench backfill from the top of the trench onto the adjacent subgrade where it can be incorporated into the granular subbase blanket course. Any unsuitable material that remains over the underdrain trench shall be removed and replaced. The subbase material shall be placed to provide clean contact between the subbase material and the underdrain granular backfill material for the full width of the underdrain trench.

c. Controlled Low Strength Material (CLSM). Controlled low strength material shall conform to the requirements of Item P-153.

d. Deflection Testing. The Engineer may at any time, not withstanding previous material acceptance, reject or require re-installation of pipe that exceeds 5 percent deflection when measured in accordance with ASTM D 2321, including Appendices.

705-3.7 CONNECTIONS. When the plans call for connections to existing or proposed pipe or structures, these connections shall be watertight and made so that a smooth uniform flow line will be obtained throughout the drainage system.

705-3.8 CLEANING AND RESTORATION OF SITE. After the backfill is completed, the Contractor shall dispose of all surplus material, dirt, and rubbish from the site. Surplus dirt may be deposited in embankments,

shoulders, or as ordered by the Engineer. Except for paved areas of the airport, the Contractor shall restore all disturbed areas to their original condition.

METHOD OF MEASUREMENT

705-4.1 The length of pipe to be paid for shall be the number of linear feet (meters) of pipe underdrains in place, completed, and approved; measured along the centerline of the pipe from end or inside face of structure to the end or inside face of structure, whichever is applicable. The several classes, types, and sizes shall be measured separately. All fittings shall be included in the footage as typical pipe sections in the pipeline being measured.

705-4.2 The quantity of porous backfill to be paid for shall be the number of cubic yards (cubic meters) of porous backfill No. 1 and No. 2, complete in place and accepted, and shall be determined from the dimensions given on the plans by typical trench sections indicating the placement of porous backfill or dimensions ordered by the Engineer.

705-4.3 The quantity of filter fabric to be paid for shall be the number of square yards (square meters) of filter fabric in place, completed, and approved; and shall be determined from the dimensions given on the plans by typical trench sections indicating the placement of filter fabric or dimensions ordered by the Engineer.

BASIS OF PAYMENT

705-5.1 Payment will be made at the contract unit price per linear foot (meter) for pipe underdrains of the type, class, and size designated; at the contract unit price **[per cubic yard (cubic meter)][per ton (metric ton)]** for porous backfill No.1; the contract unit price **[per cubic yard (cubic meter)][per ton (metric ton)]** for porous backfill No. 2, and at the contract unit price per square yard (square meter) for filter fabric. **[per linear foot (meter) COMPLETE (including porous backfill and filter fabric.]** These prices shall be full compensation for furnishing all materials and for all preparation, excavation, and installation of these materials, and for all labor, equipment, tools, and incidentals necessary to complete the item.

Payment will be made under:

Item D-705-5.1 **[ ]** inch pipe (mm pipe) **[ ]** per linear foot (meter)

Item D-705-5.2 Porous Backfill No. 1—**[per cubic yard (cubic meter)][per ton (metric ton)]**

Item D-705-5.3 Porous Backfill No. 2—**[per cubic yard (cubic meter)][per ton (metric ton)]**

Item D-705-5.4 Filter Fabric—per square yard (square meter)

[Item D-705-5.5 [ ] inch pipe (mm pipe) [ ] per linear foot (meter) COMPLETE (including porous backfill and filter fabric]

* * * *

ASTM C 136	Sieve Analysis of Fine and Coarse Aggregates
ASTM C 144	Aggregate for Masonry Mortar
ASTM C 150	Portland Cement
ASTM C 444	Perforated Concrete Pipe
ASTM C 654	Porous Concrete Pipe
ASTM D 2321	Underground Installation of Thermoplastic Pipe for Sewers and Other Gravity-Flow Applications
ASTM D 3034	Type PSM Poly(Vinyl Chloride) (PVC) Sewer Pipe and Fittings
ASTM F 477	Elastomeric Seals (Gaskets) for Joining Plastic Pipe
ASTM F 758	Smooth-Wall Poly(Vinyl Chloride) (PVC) Plastic Underdrain Systems for Highway, Airport, and Similar Drainage
ASTM F 794	Poly (Vinyl Chloride) Ribbed Drain Pipe & Fittings Based on Controlled Inside Diameter
ASTM F 949	Poly (Vinyl Chloride)(PVC) Corrugated Sewer Pipe with a Smooth Interior and Fittings
AASHTO M 190	Bituminous Coated Corrugated Metal Culvert Pipe and Pipe Arches
AASHTO M 196	Corrugated Aluminum Alloy Culverts and Underdrains
AASHTO M 252	Corrugated Polyethylene Drainage Tubing
AASHTO M 288-99	Geotextile Specification for Highway Applications
AASHTO M 294M	Corrugated Polyethylene Pipe, 300 to 1200 mm Diameter
AASHTO M 304	Poly (Vinyl Chloride) (PVC) Profile Wall Drain Pipe and Fittings Based on Controlled Inside Diameter
AASHTO	Standard Specifications for Highway Bridges

END OF ITEM D-705

Intentionally Left Blank

ITEM D-751 MANHOLES, CATCH BASINS, INLETS AND INSPECTION HOLES

DESCRIPTION

751-1.1 This item shall consist of construction of manholes, catch basins, inlets, and inspection holes, in accordance with these specifications, at the specified locations and conforming to the lines, grades, and dimensions shown on the plans or required by the Engineer.

MATERIALS

751-2.1 BRICK. The brick shall conform to the requirements of ASTM C 32, Grade SM.

751-2.2 MORTAR. Mortar shall consist of one part portland cement and two parts sand. The portland cement shall conform to the requirements of ASTM C 150, Type I. The sand shall conform to the requirements of ASTM C 144.

751-2.3 CONCRETE. Plain and reinforced concrete used in structures, connections of pipes with structures, and the support of structures or frames shall conform to the requirements of Item P-610.

751-2.4 PRECAST CONCRETE PIPE MANHOLE RINGS. Precast concrete pipe manhole rings shall conform to the requirements of ASTM C 478. Unless otherwise specified, the risers and offset cone sections shall have an inside diameter of not less than 36 inches (90 cm) nor more than 48 inches (120 cm).

751-2.5 CORRUGATED METAL. Corrugated metal shall conform to the requirements of AASHTO M 36.

751-2.6 FRAMES, COVERS, AND GRATES. The castings shall conform to one of the following requirements:

a. Gray iron castings shall meet the requirements of ASTM A 48, Class 30B and 35B.
b. Malleable iron castings shall meet the requirements of ASTM A 47.
c. Steel castings shall meet the requirements of ASTM A 27.
d. Structural steel for grates and frames shall conform to the requirements of ASTM A 283, Grade D.
e. Ductile iron castings shall conform to the requirements of ASTM A 536.
f. Austempered ductile iron castings shall conform to the requirements of ASTM A 897.

All castings or structural steel units shall conform to the dimensions shown on the plans and shall be designed to support the loadings, aircraft gear configuration and/or direct loading, specified.

Each frame and cover or grate unit shall be provided with fastening members to prevent it from being dislodged by traffic but which will allow easy removal for access to the structure.

All castings shall be thoroughly cleaned. After fabrication, structural steel units shall be galvanized to meet the requirements of ASTM A 123.

751-2.7 STEPS. The steps or ladder bars shall be gray or malleable cast iron or galvanized steel. The steps shall be the size, length, and shape shown on the plans and those steps that are not galvanized shall be given a coat of bituminous paint, when directed.

CONSTRUCTION METHODS

751-3.1 UNCLASSIFIED EXCAVATION.

a. The Contractor shall do all excavation for structures and structure footings to the lines and grades or elevations, shown on the plans, or as staked by the Engineer. The excavation shall be of sufficient size to permit the placing of the full width and length of the structure or structure footings shown. The elevations of the bottoms of

footings, as shown on the plans, shall be considered as approximately only; and the Engineer may order, in writing, changes in dimensions or elevations of footings necessary to secure a satisfactory foundation.

b. Boulders, logs, or any other objectionable material encountered in excavation shall be removed. All rock or other hard foundation material shall be cleaned of all loose material and cut to a firm surface either level, stepped, or serrated, as directed by the Engineer. All seams or crevices shall be cleaned out and grouted. All loose and disintegrated rock and thin strata shall be removed. When concrete is to rest on a surface other than rock, special care shall be taken not to disturb the bottom of the excavation, and excavation to final grade shall not be made until just before the concrete or reinforcing is to be placed.

c. The Contractor shall do all bracing, sheathing, or shoring necessary to implement and protect the excavation and the structure as required for safety or conformance to governing laws. The cost of bracing, sheathing, or shoring shall be included in the unit price bid for the structure.

d. Unless otherwise provided, bracing, sheathing, or shoring involved in the construction of this item shall be removed by the Contractor after the completion of the structure. Removal shall be effected in a manner that will not disturb or mar finished masonry. The cost of removal shall be included in the unit price bid for the structure.

e. After each excavation is completed, the Contractor shall notify the Engineer to that effect; and concrete or reinforcing steel shall be placed after the Engineer has approved the depth of the excavation and the character of the foundation material.

751-3.2 BRICK STRUCTURES.

a. Foundations. A prepared foundation shall be placed for all brick structures after the foundation excavation is completed and accepted. Unless otherwise specified, the base shall consist of reinforced concrete mixed, prepared, and placed in accordance with the requirements of Item P-610.

b. Laying Brick. All brick shall be clean and thoroughly wet before laying so that they will not absorb any appreciable amount of additional water at the time they are laid. All brick shall be laid in freshly made mortar. Mortar that is not used within 45 minutes after water has been added shall be discarded. Retempering of mortar shall not be permitted. An ample layer of mortar shall be spread on the beds and a shallow furrow shall be made in it that can be readily closed by the laying of the brick. All bed and head joints shall be filled solid with mortar. End joints of stretchers and side or cross joints of headers shall be fully buttered with mortar and a shoved joint made to squeeze out mortar at the top of the joint. Any bricks that may be loosened after the mortar has taken its set, shall be removed, cleaned, and relaid with fresh mortar. No broken or chipped brick shall be used in the face, and no spalls or bats shall be used except where necessary to shape around irregular openings or edges; in which case, full bricks shall be placed at ends or corners where possible, and the bats shall be used in the interior of the course. In making closures, no piece of brick shorter than the width of a whole brick shall be used; and wherever practicable, whole brick shall be used and laid as headers.

c. Joints. All joints shall be slushed with mortar at every course, but slushing alone will not be considered adequate for making an acceptable joint. Exterior faces shall be laid up in advance of backing. Exterior faces shall be back plastered or pargeted with a coat of mortar not less than 3/8-inch (9 mm) thick before the backing is laid up. Prior to pargeting, all joints on the back of face courses shall be cut flush. Unless otherwise noted, joints shall be not less than 1/4-inch (6 mm) nor more than 1/2-inch (12 mm) wide and whatever width is adopted shall be maintained uniform throughout the work.

d. Pointing. Face joints shall be neatly struck, using the weather joint. All joints shall be finished properly as the laying of the brick progresses. When nails or line pins are used the holes shall be immediately plugged with mortar and pointed when the nail or pin is removed.

e. Cleaning. Upon completion of the work all exterior surfaces shall be thoroughly cleaned by scrubbing and washing down with water and, if necessary to produce satisfactory results, cleaning shall be done with a 5% solution of muriatic acid which shall then be rinsed off with liberal quantities of clean fresh water.

f. Curing and Cold Weather Protection. In hot or dry weather, or when directed by the Engineer, the brick masonry shall be protected and kept moist for at least 48 hours after laying the brick. Brick masonry work or pointing shall not be done when there is frost in the brick or when the air temperature is below 50 F (10 C) unless the Contractor has on the project ready to use, suitable covering and artificial heating devices necessary to keep the atmosphere surrounding the masonry at a temperature of not less than 60 F (15 C) for the duration of the curing period.

751-3.3 CONCRETE STRUCTURES. Concrete structures shall be built on prepared foundations, conforming to the dimensions and form indicated on the plans. The construction shall conform to the requirements specified in Item P-610. Any reinforcement required shall be placed as indicated on the plans and shall be approved by the Engineer before the concrete is poured.

All invert channels shall be constructed and shaped accurately so as to be smooth, uniform, and cause minimum resistance to flowing water. The interior bottom shall be sloped downward toward the outlet.

751-3.4 PRECAST CONCRETE PIPE STRUCTURES. Precast concrete pipe structures shall be constructed on prepared or previously placed slab foundations and shall conform to the dimensions and locations shown on the plans. All precast concrete pipe sections necessary to build a completed structure shall be furnished. The different sections shall fit together readily, and all jointing and connections shall be cemented with mortar. The top of the upper precast concrete pipe member shall be suitably formed and dimensioned to receive the metal frame and cover or grate, or other cap, as required. Provision shall be made for any connections for lateral pipe, including drops and leads that may be installed in the structure. The flow lines shall be smooth, uniform, and cause minimum resistance to flow. The metal steps that are embedded or built into the side walls shall be aligned and placed at vertical intervals of 12 inches (300 mm). When a metal ladder replaces the steps, it shall be securely fastened into position.

751-3.5 CORRUGATED METAL STRUCTURES. Corrugated metal structures shall be constructed on prepared foundations, conforming to the dimensions and locations as shown on the plans. The structures shall be prefabricated. standard or special fittings shall be furnished to provide pipe connections or branches of correct dimensions. The connections or branches shall be of sufficient length to accommodate connecting bands. The fittings shall be welded in place to the metal structures. When indicated, the structures shall be placed on a reinforced concrete base. The top of the metal structure shall be designed so that either a concrete slab or metal collar may be attached to which can be fastened a standard metal frame and grate or cover. Steps or ladders shall be furnished as shown on the plans.

751-3.6 INLET AND OUTLET PIPES. Inlet and outlet pipes shall extend through the walls of the structures for a sufficient distance beyond the outside surface to allow for connections but shall be cut off flush with the wall on the inside surface, unless otherwise directed. For concrete or brick structures, the mortar shall be placed around these pipes so as to form a tight, neat connection.

751-3.7 PLACEMENT AND TREATMENT OF CASTINGS, FRAMES, AND FITTINGS. All castings, frames, and fittings shall be placed in the positions indicated on the plans or as directed by the Engineer, and shall be set true to line and to correct elevation. If frames or fittings are to be set in concrete or cement mortar, all anchors or bolts shall be in place and position before the concrete or mortar is placed. The unit shall not be disturbed until the mortar or concrete has set.

When frames or fittings are to be placed upon previously constructed masonry, the bearing surface or masonry shall be brought true to line and grade and shall present an even bearing surface in order that the entire face or back of the unit will come in contact with the masonry. The unit shall be set in mortar beds and anchored to the masonry as indicated on the plans or as directed and approved by the Engineer. All units shall set firm and secure.

After the frames or fittings have been set in final position and the concrete or mortar has been allowed to harden for 7 days, then the grates or covers shall be placed and fastened down.

751-3.8 INSTALLATION OF STEPS. The steps shall be installed as indicated on the plans or as directed by the Engineer. When the steps are to be set in concrete, they shall be placed and secured in position before the concrete is poured. When the steps are installed in brick masonry, they shall be placed as the masonry is being built. The

steps shall not be disturbed or used until the concrete or mortar has hardened for at least 7 days. After this period has elapsed, the steps shall be cleaned and painted, unless they have been galvanized.

When steps are required with precast concrete pipe structures, they shall be cast into the sides of the pipe at the time the pipe sections are manufactured or set in place after the structure is erected by drilling holes in the concrete and cementing the steps in place.

When steps are required with corrugated metal structures, they shall be welded into aligned position at a vertical spacing of 12 inches (300 mm).

In lieu of steps, prefabricated ladders may be installed. In the case of brick or concrete structures, the ladder shall be held in place by grouting the supports in drilled holes. In the case of metal structures, the ladder shall be secured by welding the top support and grouting the bottom support into drilled holes in the foundation or as directed.

751-3.9 BACKFILLING.

a. After a structure has been completed, the area around it shall be filled with approved material, in horizontal layers not to exceed 8 inches (200 mm) in loose depth, and compacted to the density required in Item P-152. Each layer shall be deposited all around the structure to approximately the same elevation. The top of the fill shall meet the elevation shown on the plans or as directed by the Engineer.

b. Backfilling shall not be placed against any structure until permission is given by the Engineer. In the case of concrete, such permission shall not be given until the concrete has been in place 7 days, or until tests made by the laboratory under supervision of the Engineer establish that the concrete has attained sufficient strength to provide a factor of safety against damage or strain in withstanding any pressure created by the backfill or the methods used in placing it.

c. Backfill shall not be measured for direct payment. Performance of this work shall be considered on obligation of the Contractor covered under the contract unit price for the structure involved.

* * * *

Payment will be made under:

Item D-751-5.1	Manholes—per each
Item D-751-5.2	Catch Basins—per each
Item D-751-5.3	Inlets—per each
Item D-751-5.4	Inspection Holes—per each

MATERIAL REQUIREMENT

ASTM A 27	Steel Castings, Carbon, for General Application
ASTM A 47	Ferritic Malleable Iron Castings
ASTM A 48	Gray Iron Castings
ASTM A 123	Zinc Coating (Hot-Dip) on Iron and Steel Hardware
ASTM A 283	Low and Intermediate Tensile Strength Carbon Steel Plates, Shapes, and Bars
ASTM A 536	Ductile Iron Castings
ASTM A 897	Austempered Ductile Iron Castings
ASTM C 32	Sewer and Manhole Brick (Made from Clay or Shale)
ASTM C 144	Aggregate for Masonry Mortar
ASTM C 150	Portland Cement
ASTM C 478	Precast Reinforced Concrete Manhole Sections
AASHTO M 36	Zinc Coated (Galvanized) Corrugated Iron or Steel Culverts and Underdrains

END OF ITEM D-751

Intentionally Left Blank

ITEM D-752 CONCRETE CULVERTS, HEADWALLS, AND MISCELLANEOUS DRAINAGE STRUCTURES

DESCRIPTION

752-1.1 This item shall consist of [plain][reinforced] concrete culverts, headwalls, and miscellaneous drainage structures constructed in accordance with these specifications, at the specified locations and conforming to the lines, grades, and dimensions shown on the plans or required by the Engineer.

MATERIALS

752-2.1 CONCRETE. [Plain][reinforced] concrete shall meet the requirements of Item P-610.

CONSTRUCTION METHODS

752-3.1 UNCLASSIFIED EXCAVATION.

a. Trenches and foundation pits for structures or structure footings shall be excavated to the lines and grades or elevations shown on the plans. The excavation shall be of sufficient size to permit the placing of the full width and length of the structure or structure footings shown. The elevations of the bottoms of footings, as shown on the plans, shall be considered as approximate only; and the Engineer may order, in writing, changes in dimensions or elevations of footings necessary to secure a satisfactory foundation.

b. Boulders, logs, or any other objectionable material encountered in excavation shall be removed. All rock or other hard foundation material shall be cleaned of all loose material and cut to a firm surface either level, stepped, or serrated, as directed by the Engineer. All seams or crevices shall be cleaned out and grouted. All loose and disintegrated rock and thin strata shall be removed. When concrete is to rest on a surface other than rock, special care shall be taken not to disturb the bottom of the excavation, and excavation to final grade shall not be made until just before the concrete or reinforcing steel is to be placed.

c. The Contractor shall do all bracing, sheathing, or shoring necessary to perform and protect the excavation and the structure as required for safety or conformance to governing laws. The cost of bracing, sheathing, or shoring shall be included in the unit price bid for excavation.

d. Unless otherwise provided, bracing, sheathing, or shoring involved therewith shall be removed by the Contractor after the completion of the structure. Removal shall be effected in a manner that will not disturb or mar finished concrete. The cost of removal shall be included in the unit price bid for excavation.

e. After each excavation is completed, the Contractor shall notify the Engineer to that effect, and concrete or reinforcing steel shall be placed after the Engineer has approved the depth of the excavation and the character of the foundation material.

752-3.2 BACKFILLING.

a. After a structure has been completed, backfilling with approved material shall be accomplished by applying the fill in horizontal layers not to exceed 8 inches (200 mm) in loose depth, and compacted. The field density of the compacted material shall be at least 90 percent of the maximum density for cohesive soils and 95 percent of the maximum density for noncohesive soils. The maximum density shall be determined in accordance with ASTM D 698. The field density shall be determined in accordance with ASTM D 1556.

b. No backfilling shall be placed against any structure until permission is given by the Engineer. In the case of concrete, such permission shall not be given until the concrete has been in place 7 days, or until tests made by the laboratory under the supervision of the Engineer establish that the concrete has attained sufficient strength to provide a factor of safety against damage or strain in withstanding any pressure created by the backfill or the methods used in placing it.

c. Fill placed around concrete culverts shall be deposited on both sides at the same time and to approximately the same elevation. Care shall be taken to prevent any wedging action against the structure, and all slopes bounding or within the areas to be backfilled shall be stepped or serrated to prevent wedge action.

d. Backfill will not be measured for direct payment. Performance of this work under the contract is not payable directly but shall be considered as a subsidiary obligation of the Contractor, covered under the contract unit price for ``unclassified excavation for structures."

752-3.3 WEEP HOLES. Weep holes shall be constructed as shown on the plans.

752-3.4 CLEANING AND RESTORATION OF SITE. After the backfill is completed, the Contractor shall dispose of all surplus material, dirt, and rubbish from the site. Surplus dirt may be deposited in embankment, shoulders, or as ordered by the Engineer. The Contractor shall restore all disturbed areas to their original condition.

After all work is completed, the Contractor shall remove all tools and equipment, leaving the entire site free, clear, and in good condition.

METHOD OF MEASUREMENT

752-4.1 The quantity of unclassified excavation for structures to be paid for shall be the number of cubic yards (cubic meters), measured in original position, of material excavated in accordance with the plans, or as directed by the Engineer; but in no case shall any yardage be included in the measurement for payment which is outside of a volume bounded by vertical planes 18 inches (45 cm) outside of and parallel to the neat lines of the footings.

752-4.2 Concrete shall be measured by the number of cubic yards (cubic meters) of concrete, complete in place and accepted. In computing the yardage of concrete for payment, the dimensions used shall be those shown on the plans or ordered by the Engineer. No measurements or other allowances shall be made for forms, false work, cofferdams, pumping, bracing, expansion joints, or finishing of the concrete. No deductions in yardage shall be made for the volumes of reinforcing steel or embedded items.

752-4.3 The quantity of reinforcing steel to be paid for shall be the calculated theoretical number of pounds (kilograms)placed as shown on the plans, complete in place and accepted. The unit weight used for deformed bars shall be the weight of plain square or round bars, as the case may be, of equal nominal size.

BASIS OF PAYMENT

752-5.1 Payment will be made at the contract unit price per cubic yard (cubic meter) for unclassified excavation for structures; at the contract unit price per cubic yard (cubic meter) for concrete for the structures; and at the contract unit price per pound (kilogram) for reinforcing steel. These prices shall be full compensation for furnishing all materials and for all preparation, excavation, and placing the materials, and for all labor, equipment, tools, and incidentals necessary to complete the structure.

Payment will be made under:

Item D-752-5.1 Unclassified Excavation for Structures—per cubic yard (cubic meter)

Item D-752-5.2 Structural Concrete—per cubic yard (cubic meter)

Item D-752-5.3 Reinforcing Steel—per pound (kilogram)

TESTING REQUIREMENTS

ASTM D 698 Moisture-Density Relations of Soils and Soil-Aggregate Mixtures Using 5.5 lb (2.49 kg) Rammer and 12-in (305 mm) Drop

ASTM D 1556 Density of Soil in Place by the Sand-Cone Method

END OF ITEM D-752

Intentionally Left Blank

ITEM D-754 CONCRETE GUTTERS, DITCHES, AND FLUMES

DESCRIPTION

754-1.1 This item shall consist of portland cement concrete gutters, ditches, and flumes constructed in accordance with these specifications at the specified locations in accordance with the dimensions, lines, and grades as shown on the plans.

MATERIALS

754-2.1 Concrete, plain and reinforced concrete shall meet the requirements of Item P-610.

754-2.2 JOINTS. Joint filler materials and premolded joint material shall conform to Item P-610.

CONSTRUCTION METHODS

754-3.1 PREPARING SUBGRADE. Excavation shall be made to the required width and depth, and the subgrade upon which the item is to be built shall be compacted to a firm uniform grade. All soft and unsuitable material shall be removed and replaced with suitable approved material. When required, a layer of approved granular material, compacted to the thickness indicated on the plans, shall be placed to form a subbase. The underlying course shall be checked and accepted by the Engineer before placing and spreading operations are started.

754-3.2 PLACING. The forms for and the mixing, placing, finishing, and curing of concrete shall conform to the requirements of Item P-610 and shall be in accordance with the following requirements.

The concrete shall be tamped and spaded until it is consolidated and mortar entirely covers and forms the top surface. The surface of the concrete shall be floated smooth and the edges rounded to the radii shown on the plans. Before the concrete is given the final finishing, the surface shall be tested with a 10-foot (3 m) straightedge, and any irregularities of more than 1/4 inch (6 mm) in 10 feet (3 m) shall be eliminated.

The concrete shall be placed with dummy-grooved joints not to exceed 25 feet (7.5 m) apart, except where shorter lengths are necessary for closures, but no section shall be less than 4 feet (120 cm) long.

Expansion joints of the type called for in the plans shall be constructed to replace a dummy groove at spacings of approximately 100 feet (30 m). When the gutter is placed next to concrete pavement, expansion joints in the gutter shall be located opposite expansion joints in the pavement. When a gutter abuts a pavement or other structure, an expansion joint shall be placed between the gutter and the other structure.

Forms shall not be removed within 24 hours after the concrete has been placed. Minor defects shall be repaired with mortar containing 1 part cement and 2 parts fine aggregate.

The operations of depositing, compacting, and finishing the item shall be conducted so as to build a satisfactory structure. If any section of concrete is found to be porous, other than minor defects that may be plastered, or is otherwise defective, it shall be removed and replaced by the Contractor without additional compensation.

754-3 BACKFILLING. After the concrete has set sufficiently, the spaces adjacent to the structure shall be refilled to the required elevation with material specified on the plans and compacted by mechanical equipment to at least 90% of the maximum density as determined by ASTM D 698. The in-place density shall be determined in accordance with ASTM D 1556.

754-3.4 CLEANING AND RESTORATION OF SITE. After the backfill is completed, the Contractor shall dispose of all surplus material, dirt, and rubbish from the site. Surplus dirt may be deposited in embankments, shoulders, or as ordered by the Engineer. The Contractor shall restore all disturbed areas to their original condition.

After all work is completed, the Contractor shall remove all tools and equipment, leaving the entire site free, clear and in good condition.

Performance of the work described in this section is not payable directly but shall be considered as a subsidiary obligation of the Contractor, covered under the contract unit price for the structure.

METHOD OF MEASUREMENT

754-4.1 Concrete shall be measured by the cubic yard (cubic meter) in accordance with the dimensions shown on the plans or ordered by the Engineer. No deductions shall be made for the volume occupied by reinforcing steel, anchors, conduits, weep holes, or piling.

754-4.2 Reinforcing steel shall be measured by the pound (kg), based on the theoretical number of pounds (kg) complete in place as shown on the plans or placed as ordered by the Engineer.

BASIS OF PAYMENT

754-5.1 The accepted quantities of structural concrete will be paid for at the contract unit price per cubic yard (cubic meter) complete in place.

754-5.2 The accepted quantities of reinforcing steel will be paid for at the contract price per pound (kg) complete in place. No allowance shall be made for clips, wire, or other material used for fastening reinforcement in place.

Payment will be made under:

Item D-754-5.1 Structural Concrete—per cubic yard (cubic meter)

Item D-754-5.2 Reinforcing Steel—per pound (kg)

TESTING REQUIREMENTS

ASTM D 698 Moisture-Density Relations of Soils and Soil-Aggregate Mixtures Using 5.5 lb (2.49 kg) Rammer and 12-inch (300 mm) Drop

ASTM D 1556 Density of Soil in Place by the Sand-Cone Method

END OF ITEM D-754

PART X – TURFING
ITEM T-901 SEEDING

DESCRIPTION

901-1.1 This item shall consist of soil preparation, seeding **[ ]** the areas shown on the plans or as directed by the Engineer in accordance with these specifications.

* * * *

* * * *

shall be worked into a satisfactory seedbed by discing, or by use of cultipackers, rollers, drags, harrows, or other appropriate means.

901-3.2 DRY APPLICATION METHOD.

a. Liming. Lime shall be applied separately and prior to the application of any fertilizer or seed and only on seedbeds that have previously been prepared as described above. The lime shall then be worked into the top 3 inches (75 mm) of soil after which the seedbed shall again be properly graded and dressed to a smooth finish.

b. Fertilizing. Following advance preparations and cleanup fertilizer shall be uniformly spread at the rate that will provide not less than the minimum quantity stated in paragraph 901-2.3.

* * * *

In order to reach areas inaccessible to the regular equipment, an extension hose at least 50 feet (15 m) in length shall be provided to which the nozzles may be connected.

c. Mixtures. Lime, if required, shall be applied separately, in the quantity specified, prior to the fertilizing and seeding operations. Not more than 220 pounds (100 kg) of lime shall be added to and mixed with each 100 gallons (380 liters) of water. Seed and fertilizer shall be mixed together in the relative proportions specified, but not more than a total of 220 pounds (100 kg) of these combined solids shall be added to and mixed with each 100 gallons (380 liters) of water.

All water used shall be obtained from fresh water sources and shall be free from injurious chemicals and other toxic substances harmful to plant life. Brackish water shall not be used at any time. The Contractor shall identify to the Engineer all sources of water at least 2 weeks prior to use. The Engineer may take samples of the water at the source or from the tank at any time and have a laboratory test the samples for chemical and saline content. The Contractor shall not use any water from any source that is disapproved by the Engineer following such tests.

All mixtures shall be constantly agitated from the time they are mixed until they are finally applied to the seedbed. All such mixtures shall be used within 2 hours from the time they were mixed or they shall be wasted and disposed of at locations acceptable to the Engineer.

d. Spraying. Lime, if required, shall be sprayed only upon previously prepared seedbeds. After the applied lime mixture has dried, the lime shall be worked into the top 3 inches (8 cm), after which the seedbed shall again be properly graded and dressed to a smooth finish.

Mixtures of seed and fertilizer shall only be sprayed upon previously prepared seedbeds on which the lime, if required, shall already have been worked in. The mixtures shall be applied by means of a high-pressure spray that shall always be directed upward into the air so that the mixtures will fall to the ground like rain in a uniform spray. Nozzles or sprays shall never be directed toward the ground in such a manner as might produce erosion or runoff.

Particular care shall be exercised to insure that the application is made uniformly and at the prescribed rate and to guard against misses and overlapped areas. Proper predetermined quantities of the mixture in accordance with specifications shall be used to cover specified sections of known area. Checks on the rate and uniformity of application may be made by observing the degree of wetting of the ground or by distributing test sheets of paper or pans over the area at intervals and observing the quantity of material deposited thereon.

On surfaces that are to be mulched as indicated by the plans or designated by the Engineer, seed and fertilizer applied by the spray method need not be raked into the soil or rolled. However, on surfaces on which mulch is not to be used, the raking and rolling operations will be required after the soil has dried.

901-3.4 MAINTENANCE OF SEEDED AREAS. The Contractor shall protect seeded areas against traffic or other use by warning signs or barricades, as approved by the Engineer. Surfaces gullied or otherwise damaged following seeding shall be repaired by regrading and reseeding as directed. The Contractor shall mow, water as directed, and otherwise maintain seeded areas in a satisfactory condition until final inspection and acceptance of the work.

When either the dry or wet application method outlined above is used for work done out of season, it will be required that the Contractor establish a good stand of grass of uniform color and density to the satisfaction of the Engineer. A grass stand shall be considered adequate when bare spots are one square foot or less, randomly dispersed, and do not exceed 3% of the area seeded. If at the time when the contract has been otherwise completed it is not possible to make an adequate determination of the color, density, and uniformity of such stand of grass, payment for the unaccepted portions of the areas seeded out of season will be withheld until such time as these requirements have been met.

METHOD OF MEASUREMENT

901-4.1 The quantity of seeding to be paid for shall be the number of units **[1,000 square feet (square meters)][acres (square meters)]** measured on the ground surface, completed and accepted.

BASIS OF PAYMENT

901-5.1 Payment shall be made at the contract unit price per **[1,000 square feet (square meters)][acre (square meters)]** or fraction thereof, which price and payment shall be full compensation for furnishing and placing all material and for all labor, equipment, tools, and incidentals necessary to complete the work prescribed in this item.

Payment will be made under:

Item 901-5.1	Seeding—per **[1,000 square feet (square meters)][acre (square meters)]**

MATERIAL REQUIREMENTS

ASTM C 602	Agricultural Liming Materials
ASTM D 977	Emulsified Asphalt
FED SPEC A-A-1909	Fertilizer
FED SPEC A-A-2671	Seeds, Agriculture

END OF ITEM T-901

Intentionally Left Blank

ITEM T-903 SPRIGGING

DESCRIPTION

903-1.1 This item shall consist of planting sprigs of living grass plants at the locations shown on the plans or as directed by the Engineer in accordance with these specifications.

MATERIALS

903-2.1 SPRIGS. Sprigs shall be healthy living stems (stolons or rhizomes), of the grass species stated in the special provisions, harvested without adhering soil and obtained from sources where the sod is heavy and thickly matted. The presence of weeds or other material that might be detrimental to the proposed planting will be cause for rejection of sprigs.

903-2.2 LIME. Lime shall conform to the requirements of 901-2.2.

903-2.3 FERTILIZER. Fertilizer shall conform to the requirements of 901-2.3.

* * * *

903-3.3 APPLYING FERTILIZER AND GROUND LIMESTONE. Following advance preparation and cleanup, fertilizer shall be uniformly spread at a rate that will provide not less than the minimum quantity of each fertilizer ingredient as stated in the special provisions. If use of ground limestone is required, it shall then be spread at a rate that will provide not less than the minimum quantity stated in the special provisions. These materials shall be incorporated into the soil to a depth of not less than 2 inches (50 mm) by discing, raking, or other methods acceptable to the Engineer. Any stones larger than 2 inches (50 mm) in any diameter, large clods, roots, and other litter brought to the surface by this operation shall be removed.

In steep slopes where fertilizer and ground limestone cannot be incorporated effectively by mechanical equipment, they may be applied with power sprayers, blower equipment, or other approved method, and need not be incorporated into the soil.

903-3.4 HARVESTING SPRIGS. The sprigs obtained from sources off the site shall be from suitable areas as close as practical to the planting site. Regardless of the source, sprigging material that contains grass and weeds taller than 6 inches (150 mm) shall be mowed to a height of 3 inches (75 mm), and the clippings raked and removed before harvesting begins. Harvesting may be performed by any method acceptable to the Engineer, including crisscross cultivation, shallow plowing, or other acceptable methods to thoroughly loosen the sprigs from the soil and to bring them to the surface. After loosening the sprigs from the soil, they shall be gathered in small piles or windrows, watered, and kept moist until planted.

Not more than 24 hours shall elapse between harvesting and planting sprigs, except that, when weather or other uncontrollable conditions interrupt the work, a time extension may be granted, provided the sprigs are still moist and viable. Sprigs that have heated in stockpiles, have become frozen, permitted to dry out, or otherwise seriously damaged during harvesting or delivery shall be rejected and shall be disposed of as directed by the Engineer.

903-3.5 PLANTING SPRIGS. Sprigging shall be done only within the periods stipulated in the special provisions. Sprigging shall not be done during windy weather, or when the ground is dry, excessively wet, frozen, or otherwise untillable. If the soil is not moist when the sprigs are being set, water shall be applied until the soil is moist and in a workable condition. One or more of the following methods shall be used, whichever is shown on the plans or stated in the special provisions:

a. Broadcast Sprigging. Sprigs shall be broadcast by hand or by suitable equipment in a uniform layer over the prepared surface with spacing between sprigs not to exceed 6 inches (150 mm). The sprigs shall then be forced into the soil to a depth of 2 to 4 inches (50 to 100 mm) with a straight spade or similar tool, or with a disc harrow or other equipment set to cover the sprigs to the required depth.

b. Row Sprigging. Furrows shall be opened along the approximate contour of slopes at the spacing and depth stated in the special provisions. Sprigs shall be placed without delay in a continuous row in the open furrow with successive sprigs touching, and they shall be covered immediately.

c. Spot Sprigging. Spot sprigging shall be performed as specified under row sprigging, except that groups of 4 sprigs or more shall be spaced 18 inches (45 cm) apart in the rows.

903-3.6 MULCHING AND COMPACTING. After planting of sprigs has been completed and prior to compacting, the surface shall be cleared of stones larger than 2 inches (50 mm) in any diameter, large clods, roots, and other litter brought to the surface during sprigging.

If mulching of sprigged areas is shown on the plans or stated in the special provisions, the sprigged areas shall be covered with mulch in accordance with the requirements of Item T-908 within 24 hours from the time sprigging has been completed, weather and soil conditions permitting.

If mulching is not shown on the plans nor stated in the special provisions, the sprigged area shall be compacted within 24 hours from the time sprigging has been completed, weather and soil conditions permitting, by cultipackers, rollers, or other satisfactory equipment operated at right angles to the slope. Compaction shall not be done when the soil is in such condition that it is picked up by the equipment.

903-3.7 ESTABLISHING TURF. The Contractor shall be responsible for the proper care of the sprigged areas during the period when the plants are becoming established and he shall protect the sprigged areas against traffic by warning signs or barricades approved by the Engineer. Surfaces gullied or otherwise damaged following sprigging shall be repaired by regrading and resprigging as directed. The Contractor shall mow, water as directed, and otherwise maintain sprigged areas in a satisfactory condition until final inspection and acceptance of the work.

METHOD OF MEASUREMENT

903-4.1 Sprigging shall be measured by the number of units of 1,000 square feet (100 square meters), measured on the ground surface, completed and accepted.

BASIS OF PAYMENT

903-5.1 Payment will be made at the contract unit price per 1,000 square feet (100 square meters) or fraction thereof. This price shall be full compensation for furnishing and placing all material including any required mulching of sprigged areas, and for all labor, equipment, tools, and incidentals necessary to complete the work prescribed in this item.

Payment will be made under:

Item 903-5.1 Sprigging—per 1,000 square feet (100 square meters)

END OF ITEM T-903

Intentionally Left Blank

ITEM T-904 SODDING

DESCRIPTION

904-1.1 This item shall consist of furnishing, hauling, and placing approved live sod on prepared areas in accordance with this specification at the locations shown on the plans or as directed by the Engineer.

MATERIALS

904-2.1 SOD. Sod furnished by the Contractor shall have a good cover of living or growing grass. This shall be interpreted to include grass that is seasonally dormant during the cold or dry seasons and capable of renewing growth after the dormant period. All sod shall be obtained from areas where the soil is reasonably fertile and contains a high percentage of loamy topsoil. Sod shall be cut or stripped from living, thickly matted turf relatively free of weeds or other undesirable foreign plants, large stones, roots, or other materials that might be detrimental to the development of the sod or to future maintenance. At least 70% of the plants in the cut sod shall be composed of the species stated in the special provisions, and any vegetation more than 6 inches (150 mm) in height shall be mowed to a height of 3 inches (75 mm) or less before sod is lifted. Sod, including the soil containing the roots and the plant growth showing above, shall be cut uniformly to a thickness not less than that stated in the special provisions.

904-2.2 LIME. Lime shall conform to the requirements of 901-2.2.

904-2.3 FERTILIZER. Fertilizer shall conform to the requirements of 901-2.3.

* * * *

grading of areas and before beginning the application of fertilizer and ground limestone, the Contractor shall repair such damage. This may include filling gullies, smoothing irregularities, and repairing other incidental damage.

904-3.3 APPLYING FERTILIZER AND GROUND LIMESTONE. Following ground surface preparation, fertilizer shall be uniformly spread at a rate which will provide not less than the minimum quantity of each fertilizer ingredient, as stated in the special provisions. If use of ground limestone is required, it shall then be spread at a rate that will provide not less than the minimum quantity stated in the special provisions. These materials shall be incorporated into the soil to a depth of not less than 2 inches (50 mm) by discing, raking, or other methods acceptable to the Engineer. Any stones larger than 2 inches (50 mm) in any diameter, large clods, roots, and other litter brought to the surface by this operation shall be removed.

904-3.4 OBTAINING AND DELIVERING SOD. After inspection and approval of the source of sod by the Engineer, the sod shall be cut with approved sod cutters to such a thickness that after it has been transported and placed on the prepared bed, but before it has been compacted, it shall have a uniform thickness of not less than 2 inches (50 mm). Sod sections or strips shall be cut in uniform widths, not less than 10 inches (250 mm), and in lengths of not less than 18 inches (45 cm), but of such length as may be readily lifted without breaking, tearing, or loss of soil. Where strips are required, the sod must be rolled without damage with the grass folded inside. The Contractor may be required to mow high grass before cutting sod.

The sod shall be transplanted within 24 hours from the time it is stripped, unless circumstances beyond the Contractor's control make storing necessary. In such cases, sod shall be stacked, kept moist, and protected from exposure to the air and sun and shall be kept from freezing. Sod shall be cut and moved only when the soil moisture conditions are such that favorable results can be expected. Where the soil is too dry, permission to cut sod may be granted only after it has been watered sufficiently to moisten the soil to the depth the sod is to be cut.

904-3.5 LAYING SOD. Sodding shall be performed only during the seasons when satisfactory results can be expected. Frozen sod shall not be used and sod shall not be placed upon frozen soil. Sod may be transplanted during periods of drought with the approval of the Engineer, provided the sod bed is watered to moisten the soil to a depth of at least 4 inches (100 mm) immediately prior to laying the sod.

The sod shall be moist and shall be placed on a moist earth bed. Pitch forks shall not be used to handle sod, and dumping from vehicles shall not be permitted. The sod shall be carefully placed by hand, edge to edge and with staggered joints, in rows at right angles to the slopes, commencing at the base of the area to be sodded and working upward. The sod shall immediately be pressed firmly into contact with the sod bed by tamping or rolling with approved equipment to provide a true and even surface, and insure knitting without displacement of the sod or deformation of the surfaces of sodded areas. Where the sod may be displaced during sodding operations, the workmen when replacing it shall work from ladders or treaded planks to prevent further displacement. Screened soil of good quality shall be used to fill all cracks between sods. The quantity of the fill soil shall not cause smothering of the grass. Where the grades are such that the flow of water will be from paved surfaces across sodded areas, the surface of the soil in the sod after compaction shall be set approximately 1 inch (25 mm) below the pavement edge. Where the flow will be over the sodded areas and onto the paved surfaces around manholes and inlets, the surface of the soil in the sod after compaction shall be placed flush with pavement edges.

On slopes steeper than 1 vertical to 2-1/2 horizontal and in v-shaped or flat-bottom ditches or gutters, the sod shall be pegged with wooden pegs not less than 12 inches (300 mm) in length and have a cross-sectional area of not less than 3/4 square inch (18 square millimeter). The pegs shall be driven flush with the surface of the sod.

904-3.6 WATERING. Adequate water and watering equipment must be on hand before sodding begins, and sod shall be kept moist until it has become established and its continued growth assured. In all cases, watering shall be done in a manner that will avoid erosion from the application of excessive quantities and will avoid damage to the finished surface.

904-3.7 ESTABLISHING TURF.

a. General. The Contractor shall provide general care for the sodded areas as soon as the sod has been laid and shall continue until final inspection and acceptance of the work.

b. Protection. All sodded areas shall be protected against traffic or other use by warning signs or barricades approved by the Engineer.

c. Mowing. The Contractor shall mow the sodded areas with approved mowing equipment, depending upon climatic and growth conditions and the needs for mowing specific areas. In the event that weeds or other undesirable vegetation are permitted to grow to such an extent that, either cut or uncut, they threaten to smother the sodded species, they shall be mowed and the clippings raked and removed from the area.

904-3.8 REPAIRING. When the surface has become bullied or otherwise damaged during the period covered by this contract, the affected areas shall be repaired to re-establish the grade and the condition of the soil, as directed by the Engineer, and shall then be sodded as specified in 904-3.5.

METHOD OF MEASUREMENT

904-4.1 This item shall be measured on the basis of the area in square yards (square meters) of the surface covered with sod and accepted.

BASIS OF PAYMENT

904-5.1 This item will be paid for on the basis of the contract unit price per square yard (square meter) for sodding, which price shall be full compensation for all labor, equipment, material, staking, and incidentals necessary to satisfactorily complete the items as specified.

Payment will be made under:

Item T-904-5.1 Sodding—per square yard (square meter)

END OF ITEM T-904

Intentionally Left Blank

ITEM T-905 TOPSOILING

DESCRIPTION

905-1.1 This item shall consist of preparing the ground surface for topsoil application, removing topsoil from designated stockpiles or areas to be stripped on the site or from approved sources off the site, and placing and spreading the topsoil on prepared areas in accordance with this specification at the locations shown on the plans or as directed by the Engineer.

MATERIALS

905-2.1 TOPSOIL. Topsoil shall be the surface layer of soil with no admixture of refuse or any material toxic to plant growth, and it shall be reasonably free from subsoil and stumps, roots, brush, stones (2 inches or more in diameter), and clay lumps or similar objects. Brush and other vegetation that will not be incorporated with the soil during handling operations shall be cut and removed. Ordinary sods and herbaceous growth such as grass and weeds are not to be removed but shall be thoroughly broken up and intermixed with the soil during handling operations. The topsoil or soil mixture, unless otherwise specified or approved, shall have a pH range of approximately 5.5 pH to 7.6 pH, when tested in accordance with the methods of testing of the association of official agricultural chemists in effect on the date of invitation of bids. The organic content shall be not less than 3% nor more than 20% as determined by the wet-combustion method (chromic acid reduction). There shall be not less than 20% nor more than 80% of the material passing the 200 mesh (0.075 mm) sieve as determined by the wash test in accordance with ASTM C 117.

Natural topsoil may be amended by the Contractor with approved materials and methods to meet the above specifications.

905-2.2 INSPECTION AND TESTS. Within 10 days following acceptance of the bid, the Engineer shall be notified of the source of topsoil to be furnished by the Contractor. The topsoil shall be inspected to determine if the selected soil meets the requirements specified and to determine the depth to which stripping will be permitted. At this time, the Contractor may be required to take representative soil samples from several locations within the area under consideration and to the proposed stripping depths, for testing purposes as specified in 905-2.1.

CONSTRUCTION METHODS

905-3.1 GENERAL. Areas to be topsoiled shall be shown on the plans. If topsoil is available on the site, the location of the stockpiles or areas to be stripped of topsoil and the stripping depths shall be shown on the plans.

Suitable equipment necessary for proper preparation and treatment of the ground surface, stripping of topsoil, and for the handling and placing of all required materials shall be on hand, in good condition, and approved by the Engineer before the various operations are started.

905-3.2 PREPARING THE GROUND SURFACE. Immediately prior to dumping and spreading the topsoil on any area, the surface shall be loosened by discs or spike-tooth harrows, or by other means approved by the Engineer, to a minimum depth of 2 inches (50 mm) to facilitate bonding of the topsoil to the covered subgrade soil. The surface of the area to be topsoiled shall be cleared of all stones larger than 2 inches (50 mm) in any diameter and all litter or other material which may be detrimental to proper bonding, the rise of capillary moisture, or the proper growth of the desired planting. Limited areas, as shown on the plans, which are too compact to respond to these operations shall receive special scarification.

Grades on the area to be topsoiled, which have been established by others as shown on the plans, shall be maintained in a true and even condition. Where grades have not been established, the areas shall be smooth-graded and the

surface left at the prescribed grades in an even and properly compacted condition to prevent, insofar as practical, the formation of low places or pockets where water will stand.

905-3.3 OBTAINING TOPSOIL. Prior to the stripping of topsoil from designated areas, any vegetation, briars, stumps and large roots, rubbish or stones found on such areas, which may interfere with subsequent operations, shall be removed using methods approved by the Engineer. Heavy sod or other cover, which cannot be incorporated into the topsoil by discing or other means shall be removed.

When suitable topsoil is available on the site, the Contractor shall remove this material from the designated areas and to the depth as directed by the Engineer. The topsoil shall be spread on areas already tilled and smooth-graded, or stockpiled in areas approved by the Engineer. Any topsoil stockpiled by the Contractor shall be rehandled and placed without additional compensation. Any topsoil that has been stockpiled on the site by others, and is required for topsoiling purposes, shall be removed and placed by the Contractor. The sites of all stockpiles and areas adjacent thereto which have been disturbed by the Contractor shall be graded if required and put into a condition acceptable for seeding.

When suitable topsoil is secured off the airport site, the Contractor shall locate and obtain the supply, subject to the approval of the Engineer. The Contractor shall notify the Engineer sufficiently in advance of operations in order that necessary measurements and tests can be made. The Contractor shall remove the topsoil from approved areas and to the depth as directed. The topsoil shall be hauled to the site of the work and placed for spreading, or spread as required. Any topsoil hauled to the site of the work and stockpiled shall be rehandled and placed without additional compensation.

905-3.4 PLACING TOPSOIL. The topsoil shall be evenly spread on the prepared areas to a uniform depth of 2 inches (50 mm) after compaction, unless otherwise shown on the plans or stated in the special provisions. Spreading shall not be done when the ground or topsoil is frozen, excessively wet, or otherwise in a condition detrimental to the work. Spreading shall be carried on so that turfing operations can proceed with a minimum of soil preparation or tilling.

After spreading, any large, stiff clods and hard lumps shall be broken with a pulverizer or by other effective means, and all stones or rocks (2 inches (50 mm) or more in diameter), roots, litter, or any foreign matter shall be raked up and disposed of by the Contractor. after spreading is completed, the topsoil shall be satisfactorily compacted by rolling with a cultipacker or by other means approved by the Engineer. The compacted topsoil surface shall conform to the required lines, grades, and cross sections. Any topsoil or other dirt falling upon pavements as a result of hauling or handling of topsoil shall be promptly removed.

METHOD OF MEASUREMENT

905-4.1 Topsoil obtained on the site shall be measured by the number of cubic yards (cubic meters) of topsoil measured in its original position and stripped or excavated. Topsoil stockpiled by others and removed for topsoiling by the Contractor shall be measured by the number of cubic yards (cubic meters) of topsoil measured in the stockpile. Topsoil shall be measured by volume in cubic yards (cubic meters) computed by the method of end areas.

905-4.2 Topsoil obtained off the site shall be measured by the number of cubic yards (cubic meters) of topsoil measured in its original position and stripped or excavated. Topsoil shall be measured by volume in cubic yards (meters) computed by the method of end areas.

BASIS OF PAYMENT

905-5.1 Payment will be made at the contract unit price per cubic yard (cubic meter) for topsoiling (obtained on the site). This price shall be full compensation for furnishing all materials and for all preparation, placing, and spreading of the materials, and for all labor, equipment, tools, and incidentals necessary to complete the item.

905-5.2 Payment will be made at the contract unit price per cubic yard (cubic meter) for topsoiling (obtained off the site). This price shall be full compensation for furnishing all materials and for all preparation, placing, and spreading of the materials, and for all labor, equipment, tools, and incidentals necessary to complete the item.

Payment will be made under:

Item T-905-5.1 Topsoiling (Obtained on Site or Removed from Stockpile—per cubic yard (cubic meter)

Item T-905-5.2 Topsoiling (Furnished from Off the Site)—per cubic yard (cubic meter)

TESTING MATERIALS

ASTM C 117 Materials Finer than 75-μm (No. 200) Sieve in Mineral Aggregates by Washing

END OF ITEM T-905

Intentionally Left Blank

ITEM T-907 TILLING

DESCRIPTION

907-1.1 This item shall consist of preparing the surface of areas for dust control or erosion control in accordance with this specification at the locations shown on the plans or as directed by the Engineer.

CONSTRUCTION METHODS

907-3.1 GENERAL. Areas to be tilled and areas requiring special attention and tilling shall be shown on the plans.

The tilling work shall be performed only during periods when beneficial and satisfactory results can be reasonably expected. The work shall be stopped when it is unlikely that the desired results will be obtained, due to excessive drought, moisture conditions, or other factors, and resumed only when the conditions again are favorable.

Suitable equipment necessary for proper tilling and for handling all required materials shall be on hand, in good operating condition, and approved by the Engineer before the various operations are started.

907-3.2 TILLING.

a. General. Prior to the commencement of tilling operations, all heavy growths of vegetation on areas shown on the plans to be tilled shall be mowed, raked and burned, used for mulch if suitable, or hauled off the site, as directed by the Engineer.

During tilling operations, the ground surface shall be kept cleared of all cable, wire, or any other waste materials that might hinder final grading, planting, or subsequent maintenance operations. Any irregularities in the surface resulting from tilling or other operations of the Contractor shall be corrected insofar as practical to prevent the formation of low places and pockets where water will stand.

The proper graded areas shall be tilled by the Contractor with suitable plows, discs, scarifying machines, or other power-drawn implements approved by the Engineer.

b. For Dust and Erosion Control. The areas to be tilled for dust or erosion control shall be loosened to a depth of at least 4 inches (10 cm) by a tiller tool so that clods will be left on the surface of the ground. In areas where such penetration cannot be accomplished by a tiller tool in one operation, a heavy scarifier shall be used first. On areas 250 feet (76 m) or more from the centerline of runways, as shown on the plans, on which scarifiers will not produce clods of sufficient size and quantity to provide adequate control by the above operation, furrows shall be opened on approximately 36-inch (90 cm) centers to a depth of 5 inches (12 cm) by using an approved type lister. Tilling operations shall commence on the windward side of the field and at right angles to the prevailing wind except on runway shoulders, where they shall be parallel to the pavements. Equipment and operations, other than those specified above, may be used subject to the approval of the Engineer.

907-3.3 SMOOTH GRADING. Where final grades have been established by others, they shall be shown on the plans. Where grades have not been established, the areas shall be smooth graded and the surfaces left at the prescribed grades in an even and properly compacted condition which, insofar as practical, will prevent the formation of low places and pockets where water will stand.

METHOD OF MEASUREMENT

907-4.1 Tilling shall be measured by the number of acres (square meter), measured by surface area, tilled, smooth graded, and accepted.

BASIS OF PAYMENT

907-5.1 Payment will be made at the contract unit price per acre (square meter) for tilling. This price shall be full compensation for furnishing all materials and for all preparation, operation and smooth grading, and for all labor, equipment, tools and incidentals necessary to complete the item.

Payment will be made under:

Item T-907-5.1	Tilling—per acre (square meter)

END OF ITEM T-907

ITEM T-908 MULCHING

DESCRIPTION

908-1.1 This item shall consist of furnishing, hauling, placing, and securing mulch on surfaces indicated on the plans or designated by the Engineer.

MATERIALS

908-2.1 MULCH MATERIAL. Acceptable mulch shall be the materials listed below or any approved locally available material that is similar to those specified. Low grade, musty, spoiled, partially rotted hay, straw, or other materials unfit for animal consumption will be acceptable. Mulch materials, which contain matured seed of species that would volunteer and be detrimental to the proposed overseeding, or to surrounding farm land, will not be acceptable. Straw or other mulch material which is fresh and/or excessively brittle, or which is in such an advanced stage of decomposition as to smother or retard the planted grass, will not be acceptable.

a. Hay. Hay shall be native hay, sudan grass hay, broomsedge hay, legume hay, or similar hay or grass clippings.

b. Straw. Straw shall be the threshed plant residue of oats, wheat, barley, rye, or rice from which grain has been removed.

c. Hay Mulch Containing Seed. Hay mulch shall be mature hay containing viable seed of native grasses or other desirable species stated in the special provisions or as approved by the Engineer. The hay shall be cut and handled so as to preserve the maximum quantity of viable seed. Hay mulch that cannot be hauled and spread immediately after cutting shall be placed in weather-resistant stacks or baled and stored in a dry location until used.

d. Manufactured Mulch. Cellulose-fiber or wood-pulp mulch shall be products commercially available for use in spray applications.

e. Asphalt Binder. Asphalt binder material shall conform to the requirements of ASTM D 977, Type SS-1 or RS-1.

908-2.2 INSPECTION. Within 5 days after acceptance of the bid, the Engineer shall be notified of sources and quantities of mulch materials available and the Contractor shall furnish him with representative samples of the materials to be used. These samples may be used as standards with the approval of the Engineer and any materials brought on the site that do not meet these standards shall be rejected.

CONSTRUCTION METHODS

908-3.1 MULCHING. Before spreading mulch, all large clods, stumps, stones, brush, roots, and other foreign material shall be removed from the area to be mulched. Mulch shall be applied immediately after seeding. The spreading of the mulch may be by hand methods, blower, or other mechanical methods, provided a uniform covering is obtained.

Mulch material shall be furnished, hauled, and evenly applied on the area shown on the plans or designated by the Engineer. Straw or hay shall be spread over the surface to a uniform thickness at the rate of 2 to 3 tons per acre (1800-2700 kg per acre) to provide a loose depth of not less than 1-1/2 inches (37 cm) nor more than 3 inches (75 mm). Other organic material shall be spread at the rate directed by the Engineer. Mulch may be blown on the slopes and the use of cutters in the equipment for this purpose will be permitted to the extent that at least 95% of the mulch in place on the slope shall be 6 inches (150 mm) or more in length. When mulches applied by the blowing method are cut, the loose depth in place shall be not less than 1 inch (25 mm) nor more than 2 inches (50 mm).

908-3.2 SECURING MULCH. The mulch shall be held in place by light discing, a very thin covering of topsoil, small brush, pins, stakes, wire mesh, asphalt binder, or other adhesive material approved by the Engineer. Where mulches have been secured by either of the asphalt binder methods, it will not be permissible to walk on the slopes after the binder has been applied. The Contractor is warned that in the application of asphalt binder material he must take every precaution to guard against damaging or disfiguring structures or property on or adjacent to the areas worked and that he will be held responsible for any such damage resulting from his/her operations.

If the "peg and string" method is used, the mulch shall be secured by the use of stakes or wire pins driven into the ground on 5-foot (150 m) centers or less. Binder twine shall be strung between adjacent stakes in straight lines and crisscrossed diagonally over the mulch, after which the stakes shall be firmly driven nearly flush to the ground to draw the twine down tight onto the mulch.

908-3.3 CARE AND REPAIR.

a. The Contractor shall care for the mulched areas until final acceptance of the project. Such care shall consist of providing protection against traffic or other use by placing warning signs, as approved by the Engineer, and erecting any barricades that may be shown on the plans before or immediately after mulching has been completed on the designated areas.

b. The Contractor shall be required to repair or replace any mulching that is defective or becomes damaged until the project is finally accepted. When, in the judgment of the Engineer, such defects or damages are the result of poor workmanship or failure to meet the requirements of the specifications, the cost of the necessary repairs or replacement shall be borne by the Contractor. However, once the Contractor has completed the mulching of any area in accordance with the provisions of the specifications and to the satisfaction of the Engineer, no additional work at his/her expense will be required, but subsequent repairs and replacements deemed necessary by the Engineer shall be made by the Contractor and will be paid for as additional or extra work.

c. If the "asphalt spray" method is used, all mulched surfaces shall be sprayed with asphalt binder material so that the surface has a uniform appearance. The binder shall be uniformly applied to the mulch at the rate of approximately 8.0 gallons (32 liters) per 1,000 square feet (100 square meters), or as directed by the Engineer, with a minimum of 6.0 gallons (24 liters) and a maximum of 10 gallons (40 liters) per 1,000 square feet (100 square meters) depending on the type of mulch and the effectiveness of the binder securing it. Bituminous binder material may be sprayed on the mulched slope areas from either the top or the bottom of the slope. An approved spray nozzle shall be used. The nozzle shall be operated at a distance of not less than 4 feet (120 cm) from the surface of the mulch and uniform distribution of the bituminous material shall be required. A pump or an air compressor of adequate capacity shall be used to insure uniform distribution of the bituminous material.

d. If the "asphalt mix" method is used, the mulch shall be applied by blowing, and the asphalt binder material shall be sprayed into the mulch as it leaves the blower. The binder shall be uniformly applied to the mulch at the rate of approximately 8.0 gallons (32 liters) per 1,000 square feet (100 square meters) or as directed by the Engineer, with a minimum of 6.0 gallons (24 liters) and a maximum of 10 gallons (40 liters) per 1,000 square feet (100 square meters) depending on the type of mulch and the effectiveness of the binder securing it.

METHOD OF MEASUREMENT

908-4.1 Mulching shall be measured in square yards (square meters) on the basis of the actual surface area acceptably mulched.

BASIS OF PAYMENT

908-5.1 Payment will be made at the contract unit price per square yard (square meter) for mulching. The price shall be full compensation for furnishing all materials and for placing and anchoring the materials, and for all labor, equipment, tools, and incidentals necessary to complete the item.

Payment will be made under:

Item T-908-5.1	Mulching—per square yard (square meter)

MATERIAL REQUIREMENTS

ASTM D 977	Emulsified Asphalt

END OF ITEM T-908

Intentionally Left Blank

PART XI – LIGHTING INSTALLATION
ITEM L-101 AIRPORT ROTATING BEACONS

DESCRIPTION

101-1.1 This item shall consist of furnishing and installing airport rotating beacons. This work shall include the mounting, leveling, wiring, painting, servicing, and testing of the beacon and all materials and incidentals necessary to place the beacons in operating condition as a completed unit to the satisfaction of the Engineer. This item shall include a mounting platform if specified in the plans.

EQUIPMENT AND MATERIALS

101-2.1 GENERAL.

a. Airport lighting equipment and materials covered by Federal Aviation Administration (FAA) specifications shall be certified and listed under Advisory Circular (AC) 150/5345-53, Airport Lighting Equipment Certification Program.

b. All other equipment and materials covered by other referenced specifications shall be subject to acceptance through manufacturer's certification of compliance with the applicable specification when requested by the Engineer.

c. Manufacturer's certifications shall not relieve the Contractor of the Contractor's responsibility to provide materials in accordance with these specifications and acceptable to the Engineer. Materials supplied and/or installed that do not materially comply with these specifications shall be removed, when directed by the Engineer and replaced with materials, which do comply with these specifications, at the sole cost of the Contractor.

d. All materials and equipment used to construct this item shall be submitted to the Engineer for approval prior to ordering the equipment. Submittals consisting of marked catalog sheets or shop drawings shall be provided. Submittal data shall be presented in a clear, precise and thorough manner. Original catalog sheets are preferred. Photocopies are acceptable provided they are as good a quality as the original. Clearly and boldly mark each copy to identify pertinent products or models applicable to this project. Indicate all optional equipment and delete non-pertinent data. Submittals for components or electrical equipment and systems shall identify the equipment for which they apply on each submittal sheet. Markings shall be boldly and clearly made with arrows or circles (highlighting is not acceptable). Contractor is solely responsible for delays in project accruing directly or indirectly from late submissions or resubmissions of submittals.

e. The data submitted shall be sufficient, in the opinion of the Engineer, to determine compliance with the Contract Documents plans and specifications. [The Contractor's submittals shall be neatly bound in a properly sized 3-ring binder, tabbed by specification section.] The Engineer reserves the right to reject any and all equipment, materials or procedures, which, in the Engineer's opinion, does not meet the system design and the standards and codes, specified herein.

f. All equipment and materials furnished and installed under this section shall be guaranteed against defects in materials and workmanship for a period of at least [twelve (12) months] from final acceptance by the Owner. The defective materials and/or equipment shall be repaired or replaced, at the Owner's discretion, with no additional cost to the Owner.

* *

The engineer should specify the form in which submittals are to be received and number of copies.

The length of time for guarantee of materials and workmanship should be as stated in the contract between the owner and contractor and the contract special provisions.

* * * *

101-3.4 SERVICING. Before placing the beacon in operation, the Contractor shall check the manufacturer's manual for proper servicing requirements. Follow the manufacturer's servicing requirements for each size beacon.

101-3.5 BEAM ADJUSTMENT. After the beacon has been mounted and leveled, the elevation of the beams shall be adjusted. The final beam adjustments shall be made at night so that results can be readily observed. The beams shall be adjusted to the elevation directed by the Engineer or as shown in the plans, except that, in no case shall the elevation of the beams be less than 2 degrees above the horizontal.

101-3.6 BEACON MOUNTING PLATFORM. Where the beacon is to be mounted at a location other than the beacon tower and where a special mounting platform is required, the construction of this mounting platform and any necessary lightning protection equipment shall be in accordance with the details shown in the plans.

101-3.7 WIRING. The Contractor shall furnish all necessary labor and materials and shall make complete above ground electrical connections in accordance with the wiring diagram furnished with the project plans. The electrical installation shall conform to the requirements of the latest edition of National Fire Protection Association, NFPA-70, National Electric Code.

Copies of the National Electric Code may be obtained form the National Fire Protection Associations, Inc., One Batterymarch Park, Quincy, Massachusetts 02269.

If underground cable for the power feed from the transformer vault to the beacon site and duct for this cable installation is required, the cable, ground rods and duct shall be installed in accordance with and paid for as described in Item L-108, Underground Power Cable for Airports, and Item L-110, Airport Underground Electrical Duct Banks and Conduit.

Unless otherwise specified, the Contractor shall connect the tell-tale relay mechanism in the beacon to energize the tower obstruction light circuit when failure of the beacon service (primary) lamp occurs.

If lightning protection is specified in the plans or proposal as a part of this item, it shall be installed in accordance with 103-2.3 in Item L-103, Airport Beacon Towers.

101-3.8 PANEL AND CABINET. Unless otherwise specified, the Contractor shall furnish and install at the top of the beacon tower or mounting platform a circuit-breaker panel consisting of four 15-ampere breakers mounted in a weather-proof cabinet to provide separate protection for the circuits to the beacon lamps, motor, obstruction lights, and other equipment. The cabinet shall be located on the side of the beacon platform, as directed by the Engineer.

101-3.9 CONDUIT. All exposed wiring shall be run in not less than ¾ inch (19 mm) galvanized rigid steel conduit. No conduit shall be installed on top of a beacon platform floor. All conduit shall be installed to provide for drainage. If mounted on a steel beacon tower, the conduit shall be fastened to the tower members with "wraplock" straps, clamps, or approved fasteners, spaced approximately 5 feet (150 cm) apart. The conduit shall be fastened to wooden structures with galvanized pipe straps and with galvanized wood screws not less than No. 8 or less than 1-¼ inches (31 mm) long. There shall be at least two fastenings for each 10-foot (3 m) length.

101-3.10 BOOSTER TRANSFORMER. If shown in the plans or specified in job specifications, a booster transformer to compensate for voltage drop to the beacon shall be installed in a suitable weatherproof housing under or on the tower platform or at the base of the tower. The installation shall be as indicated in the plans and described in the proposal. If the booster transformer is required for installation remote from the beacon, it shall be installed in accordance with and paid for [ ].

* * * *

101-3.11 PHOTOELECTRIC CONTROL. If shown in the plans or specified in job specifications, the Contractor shall furnish and install an automatic control switch at the location indicated in the plans. The switch shall be a photoelectric type. It shall be a standard commercially available unit that will energize when the northern sky illuminance falls below 60 footcandles (645.8 lux) but before reaching a level of 35 footcandles (367.7 lux). The photoelectric switch should de-energize when the northern sky illuminance rises to a level of not more than 60 footcandles (645.9 lux). It shall be installed, connected, and adjusted in accordance with the manufacturer's instructions.

101-3.12 OBSTRUCTION LIGHTS. Unless otherwise specified, the Contractor shall install on the top of the beacon tower or mounting platform two L-810 obstruction lights on opposite corners. These lights shall be mounted on conduit extensions to a height of not less than 4 inches (100 mm) above the top of the beacon. They shall be connected in series into the tell-tale circuit with the necessary relay and wiring connections.

101-3.13 PAINTING. If construction of a wooden mounting platform is stipulated in the proposal as part of this item, all wooden parts of the platform shall be given one priming coat of white or aviation-orange paint after fabrication but before erection and one body and one finish coat of aviation-orange paint after erection. Steel mounting platforms shall be given one priming coat of corrosion-inhibiting primer before erection and one body and one finish coat of aviation-orange paint after erection. All equipment installed under this contract and exposed to the weather shall be given one body and one finish coat of aviation-orange or white paint as required. This shall include beacon (except glass surfaces), beacon base, breaker cabinet, all conduit, and transformer cases. It shall not include air terminals or obstruction light globes.

The paint shall be applied uniformly in the proper consistency by skilled painters. The finished paint shall be free from sags, holidays, and smears. Each coat of paint shall be given ample time to dry and harden before the next coat of paint is applied. A minimum of 3 days shall be allowed for drying on wood surfaces, and a minimum of 4 days shall be allowed for drying on metal surfaces. Painting shall not be done in cold, damp, foggy, dusty, or frosty atmospheres, or when air temperature is below 40º F (4º C), nor started when the weather forecast indicates such conditions for the day.

All surfaces shall be cleaned before painting. The surfaces shall be dry and free from scale, grease, rust, dust, and dirt when paint is applied. All knots in wood surfaces shall be covered with shellac immediately before applying the priming coat of paint. Nail holes and permissible imperfections shall be filled with putty. The ready-mixed paint shall be thinned for the priming and body coats in accordance with the manufacturer's recommendations. In the absence of such recommendations, the following shall apply:

a. Body coats (for both wood and steel surfaces) - add ½ pint (0.06 liter) of turpentine to each gallon (liter) of ready-mixed paint for body coats.

b. Finish coats (for both wood and steel surfaces) the ready-mixed paint shall be used as it comes from the container for finish coats.

101-3.14 TESTING. The installation shall be fully tested in operation as a completed unit prior to acceptance. These tests shall include operation of the lamp-changer operation and taking megger and voltage readings. The insulation resistance to ground of the beacon supply circuit shall be not less than 50 megohms. Testing equipment shall be furnished by the Contractor. Tests shall be conducted in the presence of the Engineer and shall be to the Engineer’s satisfaction.

METHOD OF MEASUREMENT

101-4.1 The quantity to be paid for shall be the number of beacons installed as completed units in place, accepted, and ready for operation.

BASIS OF PAYMENT

101-5.1 Payment will be made at the contract unit price for each completed and accepted job. This price shall be full compensation for furnishing all materials and for all preparation, assembly, and installation of these materials, and for all labor, equipment, tools, and incidentals necessary to complete this item.

Payment will be made under:

Item L-101-5.1	Airport Rotating Beacon, in place—per unit

MATERIAL REQUIREMENTS

AC 150/5345-7	Specification for L-824 Underground Cable for Airport Lighting Circuits
AC 150/5345-12	Specification for Airport and Heliport Beacons
FED SPEC J-C-30	Cable and Wire, Electrical (Power, Fixed Installation) (cancelled; replaced by A-A-59544 Cable and Wire, Electrical (Power, Fixed Installation))
FED SPEC TT-E-489	Enamel, Alkyd, Gloss, Low VOC Content
FED SPEC TT-P-664D	Primer Coating, Alkyd, Corrosion-Inhibiting, Lead and Chromate Free, VOC-Compliant
FED SPEC W-P-115	Panel, Power Distribution
FED STD 595	Colors Used in Government Procurement
MIL-P-24441/19B	Paint, Epoxy-Polyamide, Zinc Primer, Formula 159, Type III
Underwriters Laboratories Standard 6	Rigid Metal Conduit
Underwriters Laboratories Standard 514	Fittings for Conduit and Outlet Boxes
Underwriters Laboratories Standard 1242	Intermediate Metal Conduit
NFPA-70	National Electric Code
NFPA-780	Standard for the Installation of Lightning Protection Systems
Master Painter's Institute	

END OF ITEM L-101

Intentionally Left Blank

ITEM L-102 HAZARD BEACON

DESCRIPTION

102-1.1 This item shall consist of furnishing and installing a hazard flashing beacon in accordance with these specifications. This work shall include the mounting, leveling, wiring, servicing, painting, and testing of the beacon and all materials and incidentals necessary to place it in operating condition as a completed unit to the satisfaction of the Engineer. This item shall include a mounting platform if specified in the plans.

EQUIPMENT AND MATERIALS

102-2.1 GENERAL.

a. Airport lighting equipment and materials covered by Federal Aviation Administration (FAA) specifications shall be certified and listed under Advisory Circular (AC) 150/5345-53, Airport Lighting Equipment Certification Program.

b. All other equipment and materials covered by other referenced specifications shall be subject to acceptance through manufacturer's certification of compliance with the applicable specification, when requested by the Engineer.

c. Manufacturer's certifications shall not relieve the Contractor of the Contractor's responsibility to provide materials in accordance with these specifications and acceptable to the Engineer. Materials supplied and/or installed that do not materially comply with these specifications shall be removed, when directed by the Engineer and replaced with materials, which do comply with these specifications, at the sole cost of the Contractor.

d. All materials and equipment used to construct this item shall be submitted to the Engineer for approval prior to ordering the equipment. Submittals consisting of marked catalog sheets or shop drawings shall be provided. Submittal data shall be presented in a clear, precise and thorough manner. Original catalog sheets are preferred. Photocopies are acceptable provided they are as good a quality as the original. Clearly and boldly mark each copy to identify pertinent products or models applicable to this project. Indicate all optional equipment and delete non-pertinent data. Submittals for components of electrical equipment and systems shall identify the equipment for which they apply on each submittal sheet. Markings shall be boldly and clearly made with arrows or circles (highlighting is not acceptable). Contractor is solely responsible for delays in project accruing directly or indirectly from late submissions or resubmissions of submittals.

e. The data submitted shall be sufficient, in the opinion of the Engineer, to determine compliance with the plans and specifications. [The Contractor's submittals shall be neatly bound in a properly sized 3-ring binder, tabbed by specification section.] The Engineer reserves the right to reject any and all equipment, materials or procedures, which, in the Engineer's opinion, does not meet the system design and the standards and codes, specified herein.

f. All equipment and materials furnished and installed under this section shall be guaranteed against defects in materials and workmanship for a period of at least [twelve (12) months] from final acceptance by the Owner. The defective materials and/or equipment shall be repaired or replaced, at the Owner's discretion, with no additional cost to the Owner.

* * * *

The length of time for guarantee of materials and workmanship should be as stated in the contract between the owner and contractor and the contract special provisions.

* * * *

102-3.3 FLASHER. If shown in plans or specified in job specifications, a separate flashing mechanism for the beacon shall be installed adjacent or near the beacon. The mechanism in this flasher shall be designed to flash not more than 40 and not less than 12 flashes per minute.

102-3.4 MOUNTING PLATFORM. If shown in plans or specified in job specifications, the Contractor shall construct a special mounting platform for the beacon, flasher, and incidental equipment. Design and materials for the special platform shall be as shown in the plans. This mounting platform may be constructed on top of a steel beacon tower, or wood pole if specified, and shall be as shown in the plans.

102-3.5 WIRING. The Contractor shall furnish all necessary labor and materials and shall make complete aboveground electrical connections in accordance with the wiring diagram furnished with the project plans. The electrical installation shall conform to the requirements of the latest edition of National Fire Protection Association, NFPA-70, National Electric Code.

If underground cable for the power feed from the transformer vault to the beacon site and duct for the installation of this cable is required, the cable, ground rods and duct shall be installed in accordance with and paid for as described in Item L-108, Underground Power Cable for Airports, and Item L-110, Airport Underground Electrical Duct Banks and Conduit.

If lightning protection is specified in the plans or proposals as a part of this item, it shall be in accordance with Item L-103, Airport Beacon Towers, paragraphs 103-2.3.

102-3.6 PANEL AND CABINET. If shown in plans or specified in job specifications, the Contractor shall furnish and install a circuit breaker panel. The panel shall be of the type and rating indicated in the plans, and it shall be mounted in a weatherproof cabinet. The cabinet shall be located near the beacon or as directed by the Engineer.

102-3.7 CONDUIT. All exposed wiring shall be run in not less than ¾ inch (19 mm) galvanized rigid steel conduit. No conduit shall be installed on top of a beacon platform floor. All conduit shall be installed to provide for drainage. If mounted on a steel beacon tower, the conduit shall be fastened to the tower members with “wraplock” straps, clamps, or approved fasteners spaced approximately 5 feet (150 cm) apart. Conduit shall be attached to wooden structures with galvanized pipe straps and fastened with galvanized wood screws not less than No. 8 or less than 1-¼ inches (31 mm) long. There shall be at least two fastenings for each 10-foot (3 m) length.

102-3.8 BOOSTER TRANSFORMERS. If shown in plans or specified in job specifications, a booster transformer to compensate for voltage drop to the beacon shall be installed in a suitable weatherproof housing under or on the tower platform or at the base of the tower or pole. The installation shall be as indicated in the plans and described in the proposal. If the booster transformer is required for installation remotely from the beacon, it shall be installed in accordance with and paid for [ ].

* * * *

102-3.10 PAINTING. Wood poles and wooden parts of mounting platforms shall be given one priming coat of white or aviation-orange paint after fabrication but before erection and one body and one finish coat of aviation-orange paint after erection. Steel mounting platforms shall be given one priming coat of corrosion-inhibiting primer before erection and one body and one finish coat of aviation-orange paint after erection. All equipment under this contract and exposed to the weather shall be given one body and one finish coat of aviation-orange or white paint as required. This shall include beacon (except glass surfaces), breaker cabinet, and all conduit and transformer cases. It shall not include air terminals.

The paint shall be applied uniformly in the proper consistency by skilled painters. The finished paint shall be free from sags, holidays, and smears. Each coat of paint shall be given ample time to dry and harden before the next coat of paint is applied. A minimum of 3 days shall be allowed for drying on wood surfaces and a minimum of 4 days shall be allowed for drying on metal surfaces. Painting shall not be done in cold, damp, foggy, dusty, or frosty atmospheres, or when air temperature is below 40º F (4º C), nor started when the weather forecast indicates such conditions for the day.

All surfaces shall be cleaned before painting. The surfaces shall be dry and free from scale, grease, rust, dust, and dirt when paint is applied. All knots in wood surfaces shall be covered with shellac immediately before applying the priming coat of paint. Nail holes and permissible imperfections shall be filled with putty.

The ready-mixed paint shall be thinned for the priming and body coats in accordance with the manufacturer's recommendations. In the absence of such recommendations, the following shall apply:

a. Body coats (for both wood and steel surfaces) - add ½ pint (0.06 liters) of turpentine to each gallon (liter) of ready-mixed paint for body coats.

b. Finish coats (for both wood and steel surfaces) - the ready-mixed paint shall be used as it comes from the container for finish coats.

102-3.11 TESTING. The installation shall be tested in operation as a completed unit prior to acceptance. Tests shall include taking megger and voltage readings. The voltage tolerance for testing shall be as specified by the beacon manufacturer. Testing equipment shall be furnished by the Contractor. The insulation resistance to ground of the beacon supply circuit shall be not less than 50 megohms when measured ungrounded.

Tests shall be conducted in the presence of the Engineer and shall be to the Engineer’s satisfaction.

METHOD OF MEASUREMENT

102-4.1 The quantity to be paid for shall be the number of beacons installed as completed units in place, accepted, and ready for operation.

BASIS OF PAYMENT

102-5.1 Payment will be made at the contract unit price for each completed and accepted job. This price shall be full compensation for furnishing all materials and for all preparation, assembly, and installation of these materials, and for all labor, equipment, tools, and incidentals necessary to complete this item.

Payment will be made under:

Item L-102-5.1	Hazard Beacon, in place—per unit

MATERIAL REQUIREMENTS

AC 150/5345-7	Specification For L-824 for Underground Electrical Cable for Airport Lighting Circuits
AC 150/5345-43	Specification for Obstruction Lighting Equipment
FED SPEC J-C-30	Cable and Wire, Electrical (Power, Fixed Installation) (cancelled; replaced by AA-59544 Cable and Wire, Electrical (Power, Fixed Installation))
FED SPEC TT-E-489	Enamel, Alkyd, Gloss, Low VOC Content
FED SPEC TT-P-664D	Primer Coating, Alkyd, Corrosion-Inhibiting, Lead and Chromate Free, VOC-Compliant
MIL-DTL-24441/19B	Paint, Epoxy-Polyamide, Zinc Primer, Formula 159, Type III
FED SPEC W-P-115	Panel, Power Distribution
FED STD 595	Colors Used in Government Procurement
Underwriters Laboratories Standard 6	Rigid Metal Conduit
Underwriters Laboratories Standard 514	Fittings for Conduit and Outlet Boxes
Underwriters Laboratories Standard 1242	Intermediate Metal Conduit
NFPA-70	National Electric Code
NFPA-780	Standard for the Installation of Lightning Protection Systems
Master Painter's Institute	

END OF ITEM L-102

Intentionally Left Blank

ITEM L-103 AIRPORT BEACON TOWERS

DESCRIPTION

103-1.1 This item shall consist of furnishing and installing an airport beacon tower of the type shown in the plans, in accordance with these specifications. This work shall include the clearing of the site, erection of the tower, installation of lightning protection, painting, and all incidentals necessary to place it in operating condition as a completed unit to the satisfaction of the Engineer.

EQUIPMENT AND MATERIALS

103-2.1 GENERAL.

a. All equipment and materials covered by referenced specifications shall be subject to acceptance through manufacturer's certification of compliance with the applicable specification when requested by the Engineer.

b. Manufacturer's certifications shall not relieve the Contractor of the Contractor's responsibility to provide materials in accordance with these specifications and acceptable to the Engineer. Materials supplied and/or installed that do not materially comply with these specifications shall be removed, when directed by the Engineer and replaced with materials, which do comply with these specifications, at the sole cost of the Contractor.

c. All materials and equipment used to construct this item shall be submitted to the Engineer for approval prior to ordering the equipment. Submittals consisting of marked catalog sheets or shop drawings shall be provided. Submittal data shall be presented in a clear, precise and thorough manner. Original catalog sheets are preferred. Photocopies are acceptable provided they are as good a quality as the original. Clearly and boldly mark each copy to identify pertinent products or models applicable to this project. Indicate all optional equipment and delete non-pertinent data. Submittals for components of electrical equipment and systems shall identify the equipment for which they apply on each submittal sheet. Markings shall be boldly and clearly made with arrows or circles (highlighting is not acceptable). Contractor is solely responsible for delays in project accruing directly or indirectly from late submissions or resubmissions of submittals.

d. The data submitted shall be sufficient, in the opinion of the Engineer, to determine compliance with the plans and specifications. [The Contractor's submittals shall be neatly bound in a properly sized 3-ring binder, tabbed by specification section.] The Engineer reserves the right to reject any and all equipment, materials or procedures, which, in the Engineer's opinion, does not meet the system design and the standards and codes, specified herein.

e. All equipment and materials furnished and installed under this section shall be guaranteed against defects in materials and workmanship for a period of at least [twelve (12) months] from final acceptance by the Owner. The defective materials and/or equipment shall be repaired or replaced, at the Owner's discretion, with no additional cost to the Owner.

* * * *

103-2.3 LIGHTNING PROTECTION. Lightning protection shall comply with NFPA-780, Standard for the Installation of Lightning Protection Systems. All materials shall comply with Class II requirements regardless of tower height. Ground rods and underground cables shall be installed in accordance with and paid for as described in Item L-108, Underground Power Cable for Airports.

103-2.4 PAINT.

a. Priming paint for galvanized steel towers shall be zinc dust-zinc oxide primer paint conforming to MIL-DTL-24441/19B. If necessary, add not more than 1/2 pint (0.06 liter) of turpentine to each gallon (liter).

b. Priming paint for ungalvanized steel towers shall be a high solids alkyd primer conforming to the Master Painter's Institute, Reference #9, Exterior Alkyd, Gloss, VOC Range E2.

c. Orange paint for the body and finished coats on metal and wood surfaces shall consist of a ready-mixed non-fading paint meeting the requirements of Fed. Spec. TT-E-489. The color shall be in accordance with Federal Standard 595, Aviation Gloss Orange Number 12197.

d. White paint for steel tower shall be ready-mixed paint conforming to Commercial Item Description A-A-3067.

CONSTRUCTION METHODS

103-3.1 CLEARING AND GRADING. The site on which the beacon tower is to be erected shall be cleared and leveled. All trees and brush shall be removed from the area within a distance of 25 feet (7.5 m) from the tower or as called for in the plans. Stumps shall be removed to a depth of 18 inches (45 cm) below finished grade and the excavation filled with earth and tamped. If a transformer vault or other structure is included as part of the installation, the area shall be cleared to a distance of 25 feet (7.5 m) from these structures. The ground near the tower shall be leveled to permit the operation of mowing machines. The leveling shall extend at least 2 feet (60 cm) outside the tower legs. All debris removed from the tower site shall be disposed of by the Contractor to the satisfaction of the Engineer and in accordance with Federal, state, or local regulations.

103-3.2 EXCAVATION AND FILL. Excavation for the tower footings shall be carried to a minimum of 4 inches (100 mm) below the footing depth. The excess excavation below the footing depth shall then be backfilled with gravel or crushed stone and compacted to the required level. The footing plates shall be installed, and a thickness of not less than 18 inches (45 cm) of the same gravel or crushed stone shall be placed immediately above the footing plates in layers of not over 6 inches (150 mm). Each layer above the footing plates shall be thoroughly tamped in place. The remainder of the backfill may be of excavated earth placed in layers not to exceed 6 inches (150 mm). Each layer shall be thoroughly compacted by tamping.

Where solid rock is encountered, which prevents the carrying of the foundation legs to the required depth but which is of sufficient strength to use holddown bolts, the tower anchor posts shall be cut off at the required length and the holddown bolts shall be installed as indicated in the plans with the approval of the Engineer. Each tower leg shall be anchored to the rock by means of two 7/8-inch (21 mm) diameter by 3-foot (90 cm) long expansion or split bolts and shall be grouted with neat portland cement into holes drilled into the natural rock. Except as required for rock foundations, the footing members shall not be cut off or shortened. If excavated material is of such character that it will not readily compact when backfilled, the Engineer may order the excavation backfilled with concrete or other suitable material.

The concrete footing for tubular beacon towers shall be installed in accordance with the manufacturer's recommendations. Portions of the footing in the topsoil layer shall not be included in the footing height.

103-3.3 ERECTION. Detail erection drawings furnished by the manufacturer shall be strictly followed during construction. All towers shall be erected in sections from the ground up unless otherwise specified. In final assembly, all bolts and fastenings shall be installed, and the structure shall be plumb, true, square, and level. Nuts

shall be taken up to a firm bearing after which the bolts shall, if necessary, be cut to proper length to protrude three full threads. Approved locknuts shall be placed on each bolt over the regular nut. Ladder bolts shall be inserted with the head to the outer face of the tower. Diagonal, leg, and handrail bolts shall be installed with nuts on the outer face of the tower, unless otherwise specified. Bent parts shall be straightened before erection without damage to the protective coating. Surfaces abraded or bared of protective coating shall be painted with the proper priming paint as specified in these specifications.

The Contractor shall install the ladder on the side of the tower adjacent to the driveway or most accessible approach to the tower. Tubular beacon towers shall be erected in accordance with the manufacturer's recommendations. The safety cable shall be located on the side of the tower adjacent to the driveway or most accessible approach to the tower.

103-3.4 LIGHTNING PROTECTION. The Contractor shall furnish and install an air terminal, down conductor, and at least one ground plate or rod for each beacon tower or as indicated in the plans. The air terminal shall be installed at the top of the tower with the tip of the rod extending not less than 6 inches (150 mm) above the top of the beacon.

Down-conductor cables shall be securely fastened to the surface of the tower leg at 5-foot (150 cm) intervals with suitable bronze fasteners having bronze or noncorrosive metal bolts. Sharp turns or bends in the down conductor will not be permitted.

All connections of cable to cable, cable to air terminals, and cable to ground plates or rods shall be made with solderless connectors or noncorrosive metal approved by the engineer and shall be of substantial construction.

The down-conductor cable shall be securely attached to ground rods or plates placed at least 2 feet (60 cm) away from the tower foundations. The ground rod shall be driven into the ground so that the top is at least 6 inches (150 mm) below grade. The down-conductor shall be firmly attached to the ground plate or rod by means of a ground connector or clamp. Plates shall be embedded in the area of permanent moisture.

The complete lightning protection installation shall be accomplished to the satisfaction of the Engineer. The resistance to ground of any part of the lightning protection system shall not exceed 25 ohms.

103-3.5 PAINTING. The Contractor shall furnish all materials and labor for painting the beacon tower. The color scheme for the steel tower shall be as shown in the plans.

a. Parts to be Painted. Tower parts (except those parts to be exposed to earth) shall not be treated or primed before erection. All tower parts placed below ground level or within 12 inches (300 mm) above ground level shall be given two coats of approved bituminous paint.

The paint shall be applied uniformly in the proper consistency by skilled painters. The finished paint shall be free from sags, holidays, and smears. Division lines between colors shall be sharply defined. Each coat of paint shall be given ample time to dry and harden before the next coat is applied. A minimum of 4 days shall be allowed for drying on metal surfaces. Painting shall not be done in cold, damp, foggy, dusty, or frosty atmospheres, or when air temperature is below 40º F (4º C), nor started when the weather forecast indicates such conditions for the day.

All surfaces shall be cleaned before painting. The surfaces shall be dry and free from scale, grease, rust, dust, and dirt when paint is applied.

The number of coats of paint applied shall be in accordance with the following instructions:

b. Steel Towers, Galvanized. One priming coat of zinc dust-zinc oxide primer after erection and one body and one finish of white or orange paint (as required by the color scheme) shall be applied after erection.

c. Steel Towers, Not Galvanized. One priming coat of corrosion-inhibiting primer and one body and one finish coat of white or orange paint (as required by the color scheme) shall be applied after erection.

The above specified orange and white ready-mixed paints shall be thinned for the body coats in accordance with the manufacturer's recommendations. In the absence of such recommendations, the following shall apply:

d. Body Coats. Add not more than 1/2 pint (0.06 liters) of turpentine to each gallon (liter) of ready-mixed paint for body coats.

e. Finish Coats. The ready-mixed paint shall be used as it comes from the container for finish coats.

METHOD OF MEASUREMENT

103-4.1 The quantity to be paid for under this item shall be the number of airport beacon towers installed as completed units in place, accepted, and ready for operation.

BASIS OF PAYMENT

103 5.1 Payment will be made at the contract unit price for each completed and accepted job. This price shall be full compensation for furnishing all materials and for all preparation, assembly, and installation of these materials, and for all labor, equipment, tools, and incidentals necessary to complete this item.

Payment will be made under:

Item L-103-5.1	Beacon Tower, in place-per unit

MATERIAL REQUIREMENTS

AC 150/5340-30	Design and Installation Details for Airport Visual Aids
FED SPEC TT-E-489	Enamel, Alkyd, Gloss, Low VOC Content
FED STD 595	Colors Used in Government Procurement
MIL-DTL-24441/19B	Paint, Epoxy-Polyamide, Zinc Primer, Formula 159, Type III
NFPA-780	Standard for the Installation of Lightning Protection Systems
Master Painter’s Institute	

END OF ITEM L-103

ITEM L-107 AIRPORT 8-FOOT AND 12-FOOT WIND CONES

DESCRIPTION

107-1.1 This item shall consist of furnishing and installing an airport wind cone in accordance with these specifications and in accordance with the dimensions, design, and details shown in the plans.

The work shall include the furnishing and installation of a support for mounting the wind cone, the specified wire, and a concrete foundation. The item shall also include all cable connections, conduit and conduit fittings, the furnishing and installation of all lamps, ground rod and ground connection, the testing of the installation, and all incidentals necessary to place the wind cone in operation as a completed unit to the satisfaction of the Engineer.

EQUIPMENT AND MATERIALS

107-2.1 GENERAL.

a. Airport lighting equipment and materials covered by Federal Aviation Administration (FAA) specifications shall be certified and listed under Advisory Circular (AC) 150/5345-53, Airport Lighting Equipment Certification Program.

b. All other equipment and materials covered by other referenced specifications shall be subject to acceptance through manufacturer's certification of compliance with the applicable specification when requested by the Engineer.

c. Manufacturer's certifications shall not relieve the Contractor of the Contractor's responsibility to provide materials in accordance with these specifications and acceptable to the Engineer. Materials supplied and/or installed that do not materially comply with these specifications shall be removed, when directed by the Engineer and replaced with materials, which do comply with these specifications, at the sole cost of the Contractor.

d. All materials and equipment used to construct this item shall be submitted to the Engineer for approval prior to ordering the equipment. Submittals consisting of marked catalog sheets or shop drawings shall be provided. Submittal data shall be presented in a clear, precise and thorough manner. Original catalog sheets are preferred. Photocopies are acceptable provided they are as good a quality as the original. Clearly and boldly mark each copy to identify pertinent products or models applicable to this project. Indicate all optional equipment and delete non-pertinent data. Submittals for components of electrical equipment and systems shall identify the equipment for which they apply on each submittal sheet. Markings shall be boldly and clearly made with arrows or circles (highlighting is not acceptable). Contractor is solely responsible for delays in project accruing directly or indirectly from late submissions or resubmissions of submittals.

e. The data submitted shall be sufficient, in the opinion of the Engineer, to determine compliance with the plans and specifications. [The Contractor's submittals shall be neatly bound in a properly sized 3-ring binder, tabbed by specification section.] The Engineer reserves the right to reject any and all equipment, materials or procedures, which, in the Engineer's opinion, does not meet the system design and the standards and codes, specified herein.

f. All equipment and materials furnished and installed under this section shall be guaranteed against defects in materials and workmanship for a period of at least [twelve (12) months] from final acceptance by the Owner. The defective materials and/or equipment shall be repaired or replaced, at the Owner's discretion, with no additional cost to the Owner.

* * * *

The length of time for guarantee of materials and workmanship should be as stated in the contract between the owner and contractor and the contract special provisions.

* * * *

d. White paint for body and finish coats on metal and wood surfaces shall be ready-mixed paint conforming to the Master Painter's Institute, Reference #9, Exterior Alkyd, Gloss, VOC Range E2.

e. Priming paint for wood surfaces shall be mixed on the job by thinning the above specified aviation-orange or white paint by adding ½ pint (0.06 liter) of raw linseed oil to each gallon (liter).

CONSTRUCTION METHODS

107-3.1 INSTALLATION. The hinged support or hinged pole shall be installed on a concrete foundation as shown in the plans.

107-3.2 POLE ERECTION. The Contractor shall erect the pole on the foundation following the manufacturer's requirements and erection details. The pole shall be level and secure.

107-3.3 ELECTRICAL CONNECTION. The Contractor shall furnish all labor and materials and shall make complete electrical connections in accordance with the wiring diagram furnished with the project plans. The electrical installation shall conform to the requirements of the latest edition of National Fire Protection Association, NFPA-70, National Electric Code.

If underground cable from the transformer vault to the wind cone site and duct for this cable installation is required, the cable and duct shall be installed in accordance with and paid for as described in Item L-108, Underground Power Cables for Airports, and Item L-110, Airport Underground Electrical Duct Banks and Conduits.

107-3.4 BOOSTER TRANSFORMER. If shown in plans or specified in job specifications, a booster transformer to compensate for voltage drop to the lamps shall be installed in a suitable weatherproof housing. The booster transformer shall be installed as indicated in the plans and described in the proposal. If the booster transformer is required for installation remotely from the windcone, it shall be installed in accordance with and paid for [ ].

* * * *

A padlock shall also be furnished by the Contractor on the 8-foot (240 cm) wind cone for securing the hinged top section to the fixed lower section. Keys for the padlock shall be delivered to the Engineer.

METHOD OF MEASUREMENT

107-4.1 The quantity to be paid for shall be the number of wind cones installed as completed units in place, accepted, and ready for operation.

BASIS OF PAYMENT

107-5.1 Payment will be made at the contract unit price for each completed and accepted job. This price shall be full compensation for furnishing all materials and for all preparation, assembly, and installation of these materials, and for all labor, equipment, tools, and incidentals necessary to complete this item.

Payment will be made under:

Item L-107-5.1	12-Foot (3.5 m) Wind Cone, in place—per unit
Item L-107-5.2	8-Foot (240 cm) Wind Cone, in place—per unit

MATERIAL REQUIREMENTS

AC 150/5345-7	Specification for L-824 Underground Cable for Airport Lighting Circuits
AC 150/5345-27	Specification for Wind Cone Assemblies
FED SPEC TT-E-489	Enamel, Alkyd, Gloss, Low VOC Content
FED SPEC J-C-30	Cable and Wire, Electrical (Power, Fixed Installation) (cancelled; replaced by AA-59544 Cable and Wire, Electrical (Power, Fixed Installation))
FED SPEC W-P-115	Panel, Power Distribution
FED STD 595	Colors Used in Government Procurement
MIL-DTL-24441/20	Paint, Epoxy-Polyamide, Green Primer, Formula 150, Type III
Underwriters Laboratories Standard 6	Rigid Metal Conduit
Underwriters Laboratories Standard 514	Fittings For Conduit and Outlet Boxes
Underwriters Laboratories Standard 1242	Intermediate Metal Conduit
NFPA-70	National Electric Code
Master Painter's Institute	

END OF ITEM L-107

ITEM L-108 UNDERGROUND POWER CABLE FOR AIRPORTS

DESCRIPTION

108-1.1 This item shall consist of furnishing and installing power cables direct buried and furnishing and/or installing power cables within conduit or duct banks-in accordance with these specifications at the locations shown on the plans. It includes excavation and backfill of trench for direct-buried cables only. Also included are the installation of counterpoise wires, ground wires, ground rods and connections, cable splicing, cable marking, cable testing, and all incidentals necessary to place the cable in operating condition as a completed unit to the satisfaction of the Engineer. This item shall not include the installation of duct banks or conduit, trenching and backfilling for duct banks or conduit, or furnishing or installation of any cable for FAA facilities. Requirements and payment for trenching and backfilling for the installation of underground conduit and duct banks is covered under Item L-110 "Airport Underground Electrical Duct Banks and Conduits."

EQUIPMENT AND MATERIALS

108-2.1 GENERAL.

a. Airport lighting equipment and materials covered by Federal Aviation Administration (FAA) specifications shall be approved under the Airport Lighting Equipment Certification Program described in Advisory Circular (AC) 150/5345-53, current version.

b. All other equipment and materials covered by other referenced specifications shall be subject to acceptance through manufacturer's certification of compliance with the applicable specification, when requested by the Engineer.

c. Manufacturer's certifications shall not relieve the Contractor of the Contractor's responsibility to provide materials in accordance with these specifications and acceptable to the Engineer. Materials supplied and/or installed that do not materially comply with these specifications shall be removed, when directed by the Engineer and replaced with materials, which do comply with these specifications, at the sole cost of the Contractor.

d. All materials and equipment used to construct this item shall be submitted to the Engineer for approval prior to ordering the equipment. Submittals consisting of marked catalog sheets or shop drawings shall be provided. Submittal data shall be presented in a clear, precise and thorough manner. Original catalog sheets are preferred. Photocopies are acceptable provided they are as good a quality as the original. Clearly and boldly mark each copy to identify pertinent products or models applicable to this project. Indicate all optional equipment and delete non-pertinent data. Submittals for components of electrical equipment and systems shall identify the equipment for which they apply on each submittal sheet. Markings shall be boldly and clearly made with arrows or circles (highlighting is not acceptable). Contractor is solely responsible for delays in project accruing directly or indirectly from late submissions or resubmissions of submittals.

e. The data submitted shall be sufficient, in the opinion of the Engineer, to determine compliance with the plans and specifications. [The Contractor's submittals shall be neatly bound in a properly sized 3-ring binder, tabbed by specification section.] The Engineer reserves the right to reject any and all equipment, materials or procedures, which, in the Engineer's opinion, does not meet the system design and the standards and codes, specified herein.

f. All equipment and materials furnished and installed under this section shall be guaranteed against defects in materials and workmanship for a period of at least [twelve (12) months] from final acceptance by the Owner. The defective materials and/or equipment shall be repaired or replaced, at the Owner's discretion, with no additional cost to the Owner. The Contractor shall be responsible to maintain an insulation resistance of 50 megohms minima, (1000V megger) with isolation transformers connected in new circuits and new segments of existing circuits through the end of the contract warranty period.

* * * *

d. The Taped or Heat-Shrinked Splice. Taped splices employing field-applied rubber, or synthetic rubber tape covered with plastic tape is acceptable. The rubber tape should meet the requirements of ASTM D 4388 and the plastic tape should comply with Mil Spec. MIL-I-24391or Fed. Spec. A-A-55809. Heat shrinkable tubing shall be heavy-wall, self-sealing tubing rated for the voltage of the wire being spliced and suitable for direct-buried installations. The tubing shall be factory coated with a thermoplastic adhesive-sealant that will adhere to the insulation of the wire being spliced forming a moisture- and dirt-proof seal. Additionally, heat shrinkable tubing for multi-conductor cables, shielded cables, and armored cables shall be factory kits designed for the application. Heat shrinkable tubing and tubing kits shall be manufactured by Tyco Electronics/ Raychem Corporation, Energy Division, or approved equivalent.

e. In all the above cases, connections of cable conductors shall be made using crimp connectors utilizing a crimping tool designed to make a complete crimp before the tool can be removed. All L-823/L-824 splices and terminations shall be made in accordance with the manufacturer's recommendations and listings.

f. All connections of counterpoise, grounding conductors and ground rods shall be made by the exothermic process or approved equivalent, except the base can ground clamp connector shall be used for attachment to the base can. All exothermic connections shall be made in accordance with the manufacturer's recommendations and listings.

108-2.5 SPLICER QUALIFICATIONS. Every airfield lighting cable splicer shall be qualified in making cable splices and terminations on cables rated above 5,000 volts AC. The Contractor shall submit to the Engineer proof of the qualifications of each proposed cable splicer for the cable type and voltage level to be worked on. Cable splicing/terminating personnel shall have a minimum of three (3) years continuous experience in terminating/splicing medium voltage cable.

108-2.6 CONCRETE. Concrete for cable markers shall conform to Specification Item P-610, ``Structural Portland Cement Concrete."

108-2.7 FLOWABLE BACKFILL. Flowable material used to backfill trenches for power cable trenches shall conform to the requirements of Item P-153 "Controlled Low Strength Material".

108-2.8 CABLE IDENTIFICATION TAGS. Cable identification tags shall by made from a non-corrosive material with the circuit identification stamped or etched onto the tag. The tags shall be of the type as detailed on the plans.

108-2.9 TAPE. Electrical tapes shall be Scotch Electrical Tapes – number Scotch 88 (1-1/2" wide) and Scotch 130C linerless rubber splicing tape (2" wide), as manufactured by the Minnesota Mining and Manufacturing Company, or approved equivalent.

108-2.10 ELECTRICAL COATING. Scotchkote shall be as manufactured by Minnesota Mining and Manufacturing Company, or approved equivalent.

108-2.11 EXISTING CIRCUITS. Whenever the scope of work requires, connection to an existing circuit, the circuit's insulation resistance shall be tested, in the presence of the Engineer. The test shall be performed in accordance with this item and prior to any activity affecting the respective circuit. The Contractor shall record the results on forms acceptable to the engineer. When the work affecting the circuit is complete, the circuit's insulation resistance shall be checked again, in the presence of the Engineer. The Contractor shall record the results on forms acceptable to the engineer. The second reading shall be equal to or greater than the first reading or the Contractor shall make the necessary repairs to the circuit to bring the second reading above the first reading. All repair costs including a complete replacement of the L-823 connectors, L-830 transformers and L-824 cable, if necessary, shall be borne by the Contractor. All test results shall be submitted in the Operation and Maintenance (O&M) Manual.

CONSTRUCTION METHODS

108-3.1 GENERAL. The Contractor shall install the specified cable at the approximate locations indicated on the plans. Unless otherwise shown on the plans, all cable required to cross under pavements expected to carry aircraft loads shall be installed in concrete encased duct banks. Wherever possible, cable shall be run without splices, from connection to connection.

Cable connections between lights will be permitted only at the light locations for connecting the underground cable to the primary leads of the individual isolation transformers. The Contractor shall be responsible for providing cable in continuous lengths for home runs or other long cable runs without connections, unless otherwise authorized in writing by the Engineer or shown on the plans.

In addition to connectors being installed at individual isolation transformers, L-823 cable connectors for maintenance and test points shall be installed at locations shown on the plans. Cable circuit identification markers shall be installed on both sides of the L-823 connectors installed or at least once in each access point where L-823 connectors are not installed.

* * * *

it shall be left sealed until connections are made. Where more than one cable is to be installed in a conduit, all cable shall be pulled in the conduit–at the same time. The pulling of a cable through duct banks or conduits may be accomplished by handwinch or power winch with the use of cable grips or pulling eyes. Maximum pulling-tensions shall-be governed by cable manufacturer's recommendations. A non-hardening lubricant recommended for the type of cable being installed shall be used where pulling lubricant is required.

[Contractor shall submit pulling tension values to the Engineer prior to any cable installation. If required by the Engineer, pulling tension values for cable pulls shall be monitored by a dynamometer in the presence of the Engineer. Cable pull tensions shall be recorded by the Contractor and reviewed by the Engineer. Cables exceeding the maximum allowable pulling tension values shall be removed and replaced by the Contractor at the Contractor's expense.]

The manufacturer's minimum bend radius or the NEC requirements whichever is more restrictive shall apply. Cable installation, handling and storage shall be per manufacturer's recommendations. During cold weather, particular attention shall be paid to the manufacturer's minimum installation temperature. Cable shall not be installed when the temperature is at or below the manufacturer's minimum installation temperature. At the Contractor's option, the Contractor may submit a plan, for review by the Engineer, for heated storage of the cable and maintenance of an acceptable cable temperature during installation when temperatures are below the manufacturer's minimum cable installation temperature.

Cable shall not be dragged across base can or manhole edges, pavement or earth. When cable must be coiled, lay cable out on a canvas tarp or utilize other appropriate means to prevent abrasion to the cable jacket.

* * * *

Dewatering necessary for cable installation, erosion and turbidity control, in accordance with Federal, State, and Local requirements is incidental to its respective pay items as part of Item L-108. The cost of all excavation regardless of type of material encountered, shall be included in the unit price bid for the L-108 Item.

The Contractor shall excavate all cable trenches to a width not less than 6 inches. Unless otherwise specified on the plans, all cables in the same location and running in the same general direction shall be installed in the same trench.

When rock is encountered, the rock shall be removed to a depth of at least 3 inches below the required cable depth and it shall be replaced with bedding material of earth or sand containing no mineral aggregate particles that would be retained on a 1/4-inch sieve. Flowable backfill material may alternatively be used. The Contractor shall ascertain the type of soil or rock to be excavated before bidding. All such rock removal shall be performed and paid for under Item P-152.

Duct bank or conduit markers temporarily removed for trench excavations shall be replaced as required.

It is the Contractor's responsibility to locate existing utilities within the work area prior to excavation. Where existing active cable(s) cross proposed installations, the Contractor shall insure that these cable(s) are adequately protected. Where crossings are unavoidable, no splices will be allowed in the existing cables, except as specified on the plans. Installation of new cable where such crossings must occur shall proceed as follows:

(1) Existing cables shall be located manually. Unearthed cables shall be inspected to assure absolutely no damage has occurred.

(2) Trenching, etc., in cable areas shall then proceed, with approval of the Engineer, with care taken to minimize possible damage or disruption of existing cable, including careful backfilling in area of cable.

In the event that any previously identified cable is damaged during the course of construction, the Contractor shall be responsible for the complete repair or replacement.

b. Backfilling. After the cable has been installed, the trench shall be backfilled. The first layer of backfill in the trench shall be 3 inches deep, loose measurement, and shall be either earth or sand containing no mineral aggregate particles that would be retained on a 1/4-inch sieve. This layer shall not be compacted. The second layer shall be 5 inches deep, loose measurement, and shall contain no particles that would be retained on a 1-inch sieve. The remaining 3rd and subsequent layers of backfill shall not exceed 8 inches of loose measurement and be excavated or imported material and shall not contain stone or aggregate larger than 4 inches maximum diameter.

The second and subsequent layers shall be thoroughly tamped and compacted to at least the density of the adjacent undisturbed soil, and to the satisfaction of the Engineer. If necessary to obtain the desired compaction, the backfill material shall be moistened or aerated as required.

Trenches shall not contain pools of water during backfilling operations. The trench shall be completely backfilled and tamped level with the adjacent surface, except that when turf is to be established over the trench, the backfilling shall be stopped at an appropriate depth consistent with the type of turfing operation to be accommodated. A proper allowance for settlement shall also be provided. Any excess excavated material shall be removed and disposed of in accordance with the plans and specifications.

Underground electrical warning (caution) tape shall be installed in the trench above all direct-buried cable. Contractor shall submit a sample of the proposed warning tape for acceptance by the Engineer. If not shown on the plans, the warning tape shall be located six inches above the direct-buried cable or the counterpoise wire if present. A 4-6 inch wide polyethylene film detectable tape, with a metalized foil core, shall be installed above all direct buried cable or counterpoise. The tape shall be of the color and have a continuous legend as indicated on the plans. The tape shall be installed 8 inches minimum below finished grade.

c. Restoration. Where soil and sod has been removed, it shall be replaced as soon as possible after the backfilling is completed. All areas disturbed by work shall be restored to its original condition. The restoration

shall include the **[sodding] [topsoiling] [fertilizing] [liming] [seeding] [sprigging] [mulching]** as shown on the plans. The Contractor shall be held responsible for maintaining all disturbed surfaces and replacements until final acceptance. When trenching is through paved areas, restoration shall be equal to existing conditions and compaction shall meet the requirements of Item P-152. Restoration shall be considered incidental to the pay item of which it is a component part.

* * * *

rubber tape and one layer of plastic tape, one-half lapped, extending at least 1-1/2 inches (37 mm) on each side of the joint.

d. Taped or Heat-Shrinked Splices. A taped splice shall be made in the following manner:

Bring the cables to their final position and cut so that the conductors will butt. Remove insulation and jacket allowing for bare conductor of proper length to fit compression sleeve connector with 1/4 inch (6 mm) of bare conductor on each side of the connector. Prior to splicing, the two ends of the cable insulation shall be penciled using a tool designed specifically for this purpose and for cable size and type. Do not use emery paper on splicing operation since it contains metallic particles. The copper conductors shall be thoroughly cleaned. Join the conductors by inserting them equidistant into the compression connection sleeve. Crimp conductors firmly in place with crimping tool that requires a complete crimp before tool can be removed. Test the crimped connection by pulling on the cable. Scrape the insulation to assure that the entire surface over which the tape will be applied (plus 3 inches (75 mm) on each end) is clean. After scraping wipe the entire area with a clean lint-free cloth. Do not use solvents.

Apply high-voltage rubber tape one-half lapped over bare conductor. This tape should be tensioned as recommended by the manufacturer. Voids in the connector area may be eliminated by highly elongating the tape, stretching it just short of its breaking point. Throughout the rest of the splice less tension should be used. Always attempt to exactly half-lap to produce a uniform buildup. Continue buildup to 1-1/2 times cable diameter over the body of the splice with ends tapered a distance of approximately 1 inch (25 mm) over the original jacket. Cover rubber tape with two layers of vinyl pressure-sensitive tape one-half lapped. Do not use glyptol or lacquer over vinyl tape as they react as solvents to the tape. No further cable covering or splice boxes are required.

Heat shrinkable tubing shall be installed following manufacturer's instructions. Direct flame heating shall not be permitted unless recommended by the manufacturer. Cable surfaces within the limits of the heat-shrink application shall be clean and free of contaminates prior to application.

108-3.6 BARE COUNTERPOISE WIRE INSTALLATION FOR LIGHTNING PROTECTION AND GROUNDING. If shown on the plans or included in the job specifications, bare counterpoise copper wire shall be installed for lightning protection of the underground cables. Counterpoise wire shall be installed in the same trench for the entire length of buried cable, conduits and duct banks that are installed to contain airfield cables. Where the cable or duct/conduit trench runs parallel to the edge of pavement, the counterpoise shall be installed in a separate trench located half the distance between the pavement edge and the cable or duct/conduit trench. In trenches not parallel to pavement edges, counterpoise wire shall be installed continuously a minimum of 4 inches above the cable, conduit or duct bank, or as shown on the plans if greater. Additionally, counterpoise wire shall be installed at least 8 inches below the top of subgrade in paved areas or 10 inches below finished grade in un-paved areas. This dimension may be less than 4 inches where conduit is to be embedded in existing pavement. Counterpoise wire shall not be installed in conduit.

The counterpoise wire shall be routed around to each light fixture base, mounting stake, or junction/access structures. The counterpoise wire shall also be exothermically welded to ground rods installed as shown on the plans but not more than 500feet (150 m) apart around the entire circuit.

The counterpoise system shall be continuous and terminate at the transformer vault or at the power source. It shall be securely attached to the vault or equipment external ground ring or other made electrode grounding system. The connections shall be made as shown on the plans and in the specifications.

If shown on the plans or in the specifications, a separate equipment (safety) ground system shall be provided in addition to the counterpoise wire using one of the following methods:

(1) A ground rod installed at and securely attached to each light fixture base, mounting stake if painted, and to all metal surfaces at junction/access structures.

(2) Install an insulated equipment ground conductor internal to the conduit system and securely attached it to each light fixture base and to all metal surfaces at junction/access structures. This equipment ground

conductor shall also be exothermically welded to ground rods installed not more than 500 feet (150 m) apart around the circuit.

a. Counterpoise Installation Above Multiple Conduits and Duct Banks. Counterpoise wires shall be installed above multiple conduits/duct banks for airfield lighting cables, with the intent being to provide a complete cone of protection over the airfield lighting cables. When multiple conduits and/or duct banks for airfield cable are installed in the same trench, the number and location of counterpoise wires above the conduits shall be adequate to provide a complete cone of protection measured 22 ½ degrees each side of vertical.

Where duct banks pass under pavement to be constructed in the project, the counterpoise shall be placed above the duct bank. Reference details on the construction plans.

b. Counterpoise Installation at Existing Duct Banks. When airfield lighting cables are indicated on the plans to be routed through existing duct banks, the new counterpoise wiring shall be terminated at ground rods at each end of the existing duct bank where the cables being protected enter and exit the duct bank. The new counterpoise conductor shall be bonded to the existing counterpoise system.

108-3.7 EXOTHERMIC BONDING. Bonding of counterpoise wire shall be by the exothermic welding process. Only personnel experienced in and regularly engaged in this type of work shall make these connections.

Contractor shall demonstrate to the satisfaction of the Engineer, the welding kits, materials and procedures to be used for welded connections prior to any installations in the field. The installations shall comply with the manufacturer's recommendations and the following:

All slag shall be removed from welds.

For welds at light fixture base cans, all galvanized coated surface areas and "melt" areas, both inside and outside of base cans, damaged by exothermic bond process shall be restored by coating with a liquid cold-galvanizing compound conforming to U.S. Navy galvanized repair coating meeting Mil. Spec. MIL-P-21035. Surfaces to be coated shall be prepared and compound applied in accordance with manufacturer's recommendations.

All buried copper and weld material at weld connections shall be thoroughly coated 6 mil of 3M "Scotchkote," or approved equivalent, or coated with coal tar bitumastic material to prevent surface exposure to corrosive soil or moisture."

108-3.8 TESTING. The Contractor shall furnish all necessary equipment and appliances for testing the airport electrical systems and underground cable circuits before and after installation. The Contractor shall perform all tests in the presence of the Engineer. The Contractor shall demonstrate the electrical characteristics to the satisfaction of the Engineer. All costs for testing are incidental to the respective item being tested. For phased projects, the tests must be completed by phase and results meeting the specifications below must be maintained by the Contractor throughout the entire project as well as during the ensuing warranty period.

Earth resistance testing methods shall be submitted to the Engineer for approval. Earth resistance testing results shall be recorded on an approved form and testing shall be performed in the presence of the Engineer. All such testing shall be at the sole expense of the Contractor.

Should the counterpoise or ground grid conductors be damaged or suspected of being damaged by construction activities the Contractor shall test the conductors for continuity with a low resistance ohmmeter. The conductors shall be isolated such that no parallel path exists and tested for continuity. The Engineer shall approve of the test method selected. All such testing shall be at the sole expense of the Contractor.

After installation, the Contractor shall test and demonstrate to the satisfaction of the Engineer the following:

a. That all affected lighting power and control circuits (existing and new) are continuous and free from short circuits.

b. That all affected circuits (existing and new) are free from unspecified grounds.

c. That the insulation resistance to ground of all new non-grounded series circuits or cable segments is not less than 50 megohms.

d. That the insulation resistance to ground of all non-grounded conductors of new multiple circuits or circuit segments is not less than 50 megohms.

e. That all affected circuits (existing and new) are properly connected in accordance with applicable wiring diagrams.

f. That all affected circuits (existing and new) are operable. Tests shall be conducted that include operating each control not less than 10 times and the continuous operation of each lighting and power circuit for not less than 1/2 hour.

g. That the impedance to ground of each ground rod does not exceed 25 ohms prior to establishing connections to other ground electrodes. The fall-of-potential ground impedance test shall be utilized, as described by ANSI/IEEE Standard 81, to verify this requirement.

Two copies of tabulated results of all cable tests performed shall be supplied by the Contractor to the Engineer. Where connecting new cable to existing cable, ground resistance tests shall be performed on the new cable prior to connection to the existing circuit.

There are no approved "repair" procedures for items that have failed testing other than complete replacement.

METHOD OF MEASUREMENT

108-4.1 Trenching shall be measured by the linear feet (meters) of trench, including the excavation, backfill, and restoration, completed, measured as excavated, and accepted as satisfactory.

When specified, separate measurement shall be made for trenches of various specified widths.

The cost of all excavation, backfill, dewatering and restoration regardless of the type of material encountered shall be included in the unit price bid for the work.

108-4.2 Cable or counterpoise wire installed in trench, duct bank or conduit shall be measured by the number of linear feet (meters) of cable or counterpoise wire installed in trenches, duct bank or conduit, including ground rods and grounding connectors, and trench marking tape ready for operation, and accepted as satisfactory. Separate measurement shall be made for each cable or counterpoise wire installed in trench, duct bank or conduit. The measurement for this item **[shall] [shall not]** include additional quantities required for slack.

* * * *

BASIS OF PAYMENT

108-5.1 Payment will be made at the contract unit price for trenching, cable and bare counterpoise wire installed in trench (direct-buried), or cable and equipment ground installed in duct bank or conduit, in place by the Contractor and accepted by the Engineer. This price shall be full compensation for furnishing all materials and for all preparation and installation of these materials, and for all labor, equipment, tools, and incidentals, including ground rods and ground connectors and trench marking tape, necessary to complete this item.

Payment will be made under:

Item L-108-5.1	Trenching for direct-buried cable —per linear foot (meter)
Item L-108-5.2	**[No. 8 AWG] [No. 6 AWG]** L-824C Cable, installed in trench, duct bank or conduit—per liner foot (meter)

* * * *

ANSI/IEEE Std 81	IEEE Guide for Measuring Earth Resistivity, Ground Impedance, and Earth Surface Potentials of a Ground System

END OF ITEM L-108

ITEM L-109 AIRPORT TRANSFORMER VAULT AND VAULT EQUIPMENT

DESCRIPTION

109-1.1 This item shall consist of constructing an airport transformer vault or a prefabricated metal housing these specifications in accordance with the design and dimensions shown in the plans. This work shall also include the installation of conduits in floor and foundation, painting and lighting of the vault or metal housing, and the furnishing of all incidentals necessary to produce a completed unit. Included as a separate part under this item or as a separate item where an existing vault is to be utilized shall be the furnishing of all vault equipment, wiring, electrical buses, cable, conduit, potheads, and grounding systems. This work shall also include the painting of equipment and conduit; the marking and labeling of equipment and the labeling or tagging of wires; the testing of the installation; and the furnishing of all incidentals necessary to place it in operating condition as a completed unit to the satisfaction of the Engineer.

EQUIPMENT AND MATERIALS

109-2.1 GENERAL.

a. Airport lighting equipment and materials covered by Federal Aviation Administration (FAA) specifications shall be certified and listed under Advisory Circular (AC) 150/5345-53, Airport Lighting Equipment Certification Program.

b. All other equipment and materials covered by other referenced specifications shall be subject to acceptance through manufacturer's certification of compliance with the applicable specification when requested by the Engineer.

c. Manufacturer's certifications shall not relieve the Contractor of the Contractor’s responsibility to provide materials in accordance with these specifications and acceptable to the Engineer. Materials supplied and/or installed that do not materially comply with these specifications shall be removed, when directed by the Engineer and replaced with materials, which do comply with these specifications, at the sole cost of the Contractor.

d. All materials and equipment used to construct this item shall be submitted to the Engineer for approval prior to ordering the equipment. Submittals consisting of marked catalog sheets or shop drawings shall be provided. Submittal data shall be presented in a clear, precise and thorough manner. Original catalog sheets are preferred. Photocopies are acceptable provided they are as good a quality as the original. Clearly and boldly mark each copy to identify pertinent products or models applicable to this project. Indicate all optional equipment and delete non-pertinent data. Submittals for components of electrical equipment and systems shall identify the equipment for which they apply on each submittal sheet. Markings shall be boldly and clearly made with arrows or circles (highlighting is not acceptable). Contractor is solely responsible for delays in project accruing directly or indirectly from late submissions or resubmissions of submittals.

e. The data submitted shall be sufficient, in the opinion of the Engineer, to determine compliance with the plans and specifications. [The Contractor's submittals shall be neatly bound in a properly sized 3-ring binder, tabbed by specification section.] The Engineer reserves the right to reject any and all equipment, materials or procedures, which, in the Engineer’s opinion, does not meet the system design and the standards and codes, specified herein.

f. All equipment and materials furnished and installed under this section shall be guaranteed against defects in materials and workmanship for a period of at least [twelve (12) months] from final acceptance by the Owner. The defective materials and/or equipment shall be repaired or replaced, at the Owner's discretion, with no additional cost to the Owner.

* * * *

section shall consist of hinged or removable cover for ready access to the interior. The cross section of the duct shall be not less than 4 x 4 inches (100 x 100 mm) except where otherwise shown in the plans.

109-2.15 GROUND RODS. Ground rods shall be copper or copper-clad of the length and diameter specified in the plans.

109-2.16 POTHEADS. Potheads shall be similar to G&W Type N, Shape C (or equivalent), unless otherwise specified. Potheads shall be furnished with plain insulator bushings and conduit couplings. Potheads shall have a rating not less than the circuit voltage.

109-2.17 PREFABRICATED METAL HOUSING. The prefabricated metal housing shall be a commercially available unit.

109-2.18 FAA-APPROVED EQUIPMENT. Certain items of airport lighting equipment installed in vaults are covered by individual FAA equipment specifications. The specifications are listed below:

AC 150/5345-3	Specification for L-821 Panels for Remote Control of Airport Lighting
AC 150/5345-5	Circuit Selector Switch
AC 150/5345-7	Specification for L-824 Underground Electrical Cable for Airport Lighting Circuits
AC 150/5345-10	Specification for Constant Current Regulators and Regulator Monitors
AC 150/5345-13	Specification for L-841 Auxiliary Relay Cabinet Assembly for Pilot Control of Airport Lighting Circuits.

109-2.19 OTHER ELECTRICAL EQUIPMENT. Constant-current regulators, distribution transformers, oil switches, cutouts, relays, terminal blocks, transfer relays, circuit breakers, and all other regularly used commercial items of electrical equipment not covered by FAA equipment specifications shall conform to the applicable rulings and standards of the Institute of Electrical and Electronic Engineers or the National Electrical Manufacturers Association. When specified, test reports from a testing laboratory indicating that the equipment meets the specifications shall be supplied. In all cases, equipment shall be new and a first-grade product. This equipment shall be supplied in the quantities required for the specific project and shall incorporate the electrical and mechanical characteristics specified in the proposal and plans.

109-2.20 WIRE. Wire in conduit rated up to 5,000 volts shall conform to AC 150/5345-7, Specification for L-824 Underground Electrical Cables for Airport Lighting Circuits, for rubber insulated neoprene-covered wire, or Fed. Spec. J-C-30, Type RHW, for rubber insulated fibrous-covered wire. For ratings up to 600 volts, thermoplastic wire conforming to Fed. Spec. J-C-30, Types TW, THW, and THWN, shall be used. The wires shall be of the type, size, number of conductors, and voltage shown in the plans or in the proposal.

a. Control Circuits. Unless otherwise indicated on the plans, wire shall be not less than No. 12 AWG and shall be insulated for 600 volts. If telephone control cable is specified, No. 19 AWG telephone cable conforming to ICEA S-85-625-1996 specifications shall be used.

b. Power Circuits.

(1) 600 volts maximum-Wire shall be No. 6 AWG or larger and insulated for at least 600 volts.

(2) 3,000 volts maximum-Wire shall be No. 6 AWG or larger and insulated for at least 3,000 volts.

(3) Over 3,000 volts-Wire shall be No. 6 AWG or larger and insulated for at least the circuit voltage.

CONSTRUCTION METHODS

CONSTRUCTION OF VAULT AND PREFABRICATED METAL HOUSING

109-3.1 GENERAL. The Contractor shall construct the transformer vault or prefabricated metal housing at the location indicated in the plans. Vault construction shall be reinforced concrete, concrete masonry, or brick wall as specified. The metal housing shall be prefabricated equipment enclosure to be supplied in the size specified. The mounting pad or floor details, installation methods, and equipment placement are shown in the plans.

The Contractor shall clear, grade, and seed the area around the vault or metal housing for a minimum distance of 10 feet (3 m) on all sides. The slope shall be not less than ½-inch per foot (40 mm per m) away from the vault or metal housing in all directions.

The vault shall provide adequate protection against weather elements, including rain, wind-driven dust, snow, ice and excessive heat. The vault shall have sufficient filtered ventilation, to assure that the interior room temperatures and conditions do not exceed the recommended limits of the electrical equipment to be installed in the vault. Contractor is responsible for contacting the manufacturer of the equipment to be installed to obtain environmental limitations of the equipment to be installed.

* * * *

b. Brick and Concrete Construction. When this type of construction is specified, the foundation shall be concrete conforming to the details shown in the plans. The outer edge of the foundation at the floor level shall be beveled 1-½ inches (37 mm) at 45 degrees. Brick walls shall be 8 inches (200 cm) thick, laid in running bond with every sixth course a header course. Brick shall be laid in cement mortar (1 part masonry cement and 3 parts sand) with full mortar bed and shoved joints. All joints shall be completely filled with mortar, and facing brick shall be back-parged with mortar as work progresses. All joints shall be 3/8 inch (9 mm) thick, exterior joints tooled concave, and interior joints struck flush. Both interior and exterior brick surfaces shall be cleaned and nail holes, cracks and other defects filled with mortar. When specified, a nonfading mineral pigment mortar coloring shall be added to the mortar. Steel reinforcing bars, 3/8-inch (9 mm) in diameter and 12 inches (300 mm) long, shall be set vertically in the center of the brick wall on not more than 2-foot (60 cm) centers to project 2-½(60 mm) inches into the concrete roof slab. Lintels for supporting the brickwork over doors, windows, and louvers shall consist of two 4- x 3- x 3/8-inch (100 x 75 x 9 mm) steel angles. Lintels shall be painted with one coat of corrosion-inhibiting primer before installation, and all exposed parts shall be painted similar to doors and window sash after installation.

Window sills may be concrete poured in place or precast concrete as indicated in the plans. All exposed surfaces shall have a rubbed finish as specified under reinforced concrete construction. After completion, all interior and exterior faces of walls shall be scrubbed with a solution of muriatic acid and water in the proportions of not less than 1 part acid to 10 parts of water. All traces of efflorescence, loose mortar, and mortar stain shall be removed, and the walls washed down with clear water.

c. Concrete Masonry Construction. When this type of construction is specified, the foundation shall be concrete conforming to the details shown in the plans. The concrete masonry units shall be standard sizes and shapes and shall conform to ASTM C 90 and shall include the closures, jambs, and other shapes required by the construction as shown in the plans. Standard construction practice shall be followed for this type of work including mortar, joints, reinforcing steel for extensions into roof slab, etc. Plaster for interior walls, if specified, shall be portland cement plaster.

109-3.3 ROOF. The roof shall be reinforced concrete as shown in the plans. Reinforcing steel shall be placed as shown in the drawing and secured in position to prevent displacement during the pouring of the concrete. The concrete shall be poured monolithically and shall be free of honeycombs and voids. The surface shall have a steel-troweled finish and shall be sloped as shown in the drawing. The underside of the roof slab shall be finished in the same manner as specified for walls.

One brush or mop coat of hot asphalt roof coating shall be applied to the top surface of the roof slab. The asphalt material shall be heated to within the range specified by the manufacturer and immediately applied to the roof. The finished coat shall be continuous over the roof surface and free from holidays and blisters. Smears and dribbles of asphalt on the roof edges and building walls shall be removed.

109-3.4 FLOOR. The floor shall be reinforced concrete as shown in the drawings. When present, all sod, roots, refuse, and other perishable material shall be removed from the area under the floor to a depth of 8 inches (200 mm), unless a greater depth is specified in the invitation for bids. This area shall be backfilled with materials consisting of sand, cinders, gravel, or stone. Fill shall be placed in layers not to exceed 4 inches (100 mm) and shall be thoroughly compacted by tamping or rolling. A layer of building paper shall be placed over the fill prior to placing concrete. The floor surfaces shall have a steel-troweled finish. The floor shall be level unless a drain is specified, in which case the floor shall be pitched ¼-inch (6 mm) per foot downward toward the drain. A ¼-inch (6 mm) asphalt felt expansion joint shall be placed between floor and foundation walls. The floor shall be poured monolithically and shall be free of honeycombs and voids.

109-3.5 FLOOR DRAIN. If shown in the plans, a floor drain and dry well shall be installed in the center of the floor of the equipment room. The dry well shall be excavated 4 x 4 feet (120 x 120 cm) square and to a depth of 4 feet (120 cm) below the finished floor elevation and shall be backfilled to the elevation of the underside of the floor with gravel - which shall all pass a 2-inch (50 mm) mesh sieve and shall all be retained on a ¼-inch (6 mm) mesh sieve. The gravel backfill shall be placed in 6-inch (150 mm) maximum layers, and the entire surface of each layer shall be tamped either with a mechanical tamper or with a hand tamper weighing not less than 25 pounds (11 kg) and having a face area of not more than 36 square inches (234 square cm) nor less than 16 square inches

(104 square cm). The drain inlet shall be set flush in the concrete floor. The drain shall have a clear opening of not less than 8 inches (200 mm) in diameter.

109-3.6 CONDUITS IN FLOOR AND FOUNDATION. Conduits shall be installed in the floor and through the foundation walls in accordance with the details shown in the plans. All underground conduit shall be painted with a bituminous compound. Conduit shall be installed with a coupling or metal conduit adapter flush with the top of the floor. All incoming conduit shall be closed with a pipe plug to prevent the entrance of foreign material during construction. Space conduit entrances shall be left closed.

109-3.7 DOORS. Doors shall be metal-clad fireproof class a doors conforming to requirements of the National Electric Code and local electrical codes.

109-3.8 PAINTING. The floor, ceiling, and inside walls of concrete construction shall first be given a hardening treatment, after which the Contractor shall apply two coats of paint as specified below, except that interior face brick walls need not be painted. The hardening treatment shall consist of applying two coats of either a commercial floor hardener or a solution made by dissolving 2 pounds (0.9 kg) of magnesium fluosilicate or zinc sulphate crystals in 1 gallon (liter) of water. Each coat shall be allowed to dry at least 48 hours before the next application. After the second treating coat has dried, the surfaces shall be brushed clean of all crystals and thoroughly washed with clear water. Paint for walls and ceiling shall be a light gray color approved by the Engineer. The floor paint shall be a medium gray color approved by the Engineer. Before painting, the surfaces shall be dry and clean. The first coat shall be thinned by adding 2/3-quart (0.166 liters) of spar varnish and 1/3-quart (0.083 liters) of turpentine to each gallon (liter) of paint. The second coat shall be applied without thinning. All doors, lintels, and windows shall be cleaned to remove any rust or foreign material and shall be given one body and one finish coat of white paint. Bare metal surfaces shall be given a prime coat of corrosion-inhibiting primer prior to the body and finish coats.

109-3.9 LIGHTS AND SWITCHES. The Contractor shall furnish and install a minimum of two duplex convenience outlets in the vault room. Where a control room is specified, at least two duplex outlets shall be installed.

INSTALLATION OF EQUIPMENT IN VAULT OR PREFABRICATED METAL HOUSING

109-3.10 GENERAL. The Contractor shall furnish, install, and connect all equipment, equipment accessories, conduit, cables, wires, buses, grounds, and support necessary to insure a complete and operable electrical distribution center for the airport lighting system as specified herein and shown in the plans. When specified, an emergency power supply and transfer switch shall be provided and installed.

The equipment installation and mounting shall comply with the requirements of the National Electrical Code and local code agency having jurisdiction.

109-3.11 POWER SUPPLY EQUIPMENT. Transformers, regulators, booster transformers, and other power supply equipment items shall be furnished and installed at the location shown in the plans or as directed by the Engineer. The power supply equipment shall be set on steel "H" sections, "I" beams, channels, or concrete blocks to provide a minimum space of 1-½ inches (37 mm) between the equipment and the floor. The equipment shall be placed so as not to obstruct the oil-sampling plugs of the oil-filled units; and name-plates shall, so far as possible, not be obscured.

If specified in the plans and specifications, equipment for an alternate power source or an emergency power generator shall be furnished and installed. The alternate power supply installation shall include all equipment, accessories, an automatic changeover switch, and all necessary wiring and connections. The emergency power generator set shall be the size and type specified.

109-3.12 SWITCHGEAR AND PANELS. Oil switches, fused cutouts, relays, transfer switches, panels, panel boards, and other similar items shall be furnished and installed at the location shown in the plans or as directed by

the Engineer. Wall or ceiling mounted items shall be attached to the wall or ceiling with galvanized bolts of not less than 3/8-inch (9 mm) diameter engaging metal expansion shields or anchors in masonry or concrete vaults.

109-3.13 DUCT AND CONDUIT. The Contractor shall furnish and install square-type exposed metallic ducts with hinged covers for the control circuits in the vault. These shall be mounted along the walls behind all floor-mounted equipment and immediately below all wall-mounted equipment. The hinged covers shall be placed to open from the front side with the hinges at the front bottom.

Wall brackets for square ducts shall be installed at all joints 2 feet (60 cm) or more apart with intermediate brackets as specified. Conduit shall be used between square ducts and equipment or between different items of equipment when the equipment is designed for conduit connection. When the equipment is not designed for conduit connection, conductors shall enter the square-type control duct through insulating bushings in the duct or on the conduit risers.

109-3.14 CABLE ENTRANCE AND HIGH-VOLTAGE BUS SYSTEM. Incoming underground cable from field circuits and supply circuits will be installed outside the walls of the transformer vault as a separate item under Item L-108. The Contractor installing the vault equipment shall bring the cables from the trench or duct through the entrance conduits into the vault and make the necessary electrical connections. For the incoming and outgoing high voltage load circuits, the Contractor shall furnish and install rigid metallic vi conduit risers, surmounted by potheads, from floor level to the level as shown in the plans.

The incoming high-voltage power supply service to the vault shall enter below the floor of the vault and shall rise from the floor level in a rigid metallic conduit riser, surmounted by a pothead, as described above. Using insulated high-voltage cable, the incoming power service shall be connected from the pothead to the oil-fused cutouts or to the specified disconnecting switch or equipment. From the oil-fused cutouts or disconnecting device, the insulated service conductors shall be connected to the overhead voltage bus system of the vault. The high-voltage bus system shall utilize the materials specified and shall be mounted and installed in accordance with the requirements of the National Electrical Code or the local code agency having jurisdiction.

109-3.15 WIRING AND CONNECTIONS. The Contractor shall make all necessary electrical connections in the vault in accordance with the wiring diagrams furnished and as directed by the Engineer. In wiring to the terminal blocks, the Contractor shall leave sufficient extra length on each control lead to make future changes in connections at the terminal block. This shall be accomplished by running each control lead the longest way around the box to the proper terminal. Leads shall be neatly laced in place.

109-3.16 MARKING AND LABELING. All equipment, control wires, terminal blocks, etc., shall be tagged, marked, or labeled as specified below:

a. Wire Identification. The Contractor shall furnish and install self-sticking wire labels or identifying tags on all control wires at the point where they connect to the control equipment or to the terminal blocks. Wire labels, if used, shall be of the self-sticking preprinted type and of the manufacturer's recommended size for the wire involved. Identification -markings designated in the plans shall be followed. Tags, if used, shall be of fiber not less than ¾-inch (13 mm) in diameter and not less than 1/32-inch (1 mm) thick. Identification markings designated in the plans shall be stamped on tags by means of smalltool dies. Each tag shall be securely tied to the proper wire by a nonmetallic cord.

b. Labels. The Contractor shall stencil identifying labels on the cases of regulators, breakers, and distribution and control relay cases with white oil paint as designated by the Engineer. The letters and numerals shall be not less than 1 inch (25 mm) in height and shall be of proportionate width. The Contractor shall also mark the correct circuit designations in accordance with the wiring diagram on the terminal marking strips, which are a part of each terminal block.

METHOD OF MEASUREMENT

109-4.1 The quantity of vaults to be paid for under this item shall consist of the number of vaults constructed in place and accepted as a complete unit.

109-4.2 The quantity of prefabricated metal housings to be paid for under this item shall consist of the number of housings constructed in place and accepted as a complete unit.

109-4.3 The quantity of vault or prefabricated metal housing equipment to be paid for under this item shall consist of all equipment installed, connected, and accepted as a complete unit ready for operation.

BASIS OF PAYMENT

109-5.1 Payment will be made at the contract unit price for each completed and accepted vault or prefabricated metal housing equipment installation. This price shall be full compensation for furnishing all materials and for all preparation, assembly, and installation of these materials, and for all labor, equipment, tools, and incidentals necessary to complete the item.

Payment will be made under:

Item L-109-5.1	Construction of Airport Transformer Vault in Place-per unit
Item L-109-5.2	Installation of Airport Transformer Vault Equipment in Place-per unit
Item L-109-5.3	Construction of Prefabricated Metal Housing and Foundation in Place-per unit
Item L-109-5.4	Installation of Prefabricated Metal Housing Equipment in Place-per unit

MATERIAL REQUIREMENTS

AC 150/5345-3	Specification for L-821 Panels for Remote Control of Airport Lighting
AC 150/5345-5	Circuit Selector Switch
AC 150/5345-7	Specification for L-824 Underground Electrical Cable for Airport Lighting Circuits
AC 150/5345-10	Specification for Constant Current Regulators and Regulator Monitors
AC 150/5345-13A	Specification for L-841 Auxiliary Relay Cabinet Assembly for Pilot Control of Airport Lighting Circuits
ANSI/ICEA S-85-625-1996	Aircore, Polyethylene Insulated, Copper Conductor, Telecommunications Cable
ASTM A 615	Specification for Deformed and Plain Billet Steel Bars for Concrete Reinforcement
ASTM C 62	Specification for Building Brick (Solid Masonry Units Made from Clay or Shale)
ASTM C 90	Concrete Masonry Units, Loadbearing
ASTM D 2823	Asphalt Roof-Coating
FED SPEC J-C-30	Cable and Wire, Electrical (Power, Fixed Installation) (cancelled; replaced by AA-59544 Cable and Wire, Electrical (Power, Fixed Installation))

FED SPEC TT-E-487 Enamel, Floor and Deck

Master Painter's Institute

END OF ITEM L-109

Intentionally Left Blank

ITEM L-110 AIRPORT UNDERGROUND ELECTRICAL DUCT BANKS AND CONDUITS

DESCRIPTION

110-1.1 This item shall consist of underground electrical conduits and duct banks (single or multiple conduits encased in concrete) installed in accordance with this specification at the locations and in accordance with the dimensions, designs, and details shown on the plans. This item shall include furnishing and installing of all underground electrical duct banks and individual and multiple underground conduits. It shall also include all turfing trenching, backfilling, removal, and restoration of any paved or turfed areas; concrete encasement, mandreling, pulling lines, duct markers, plugging of conduits, and the testing of the installation as a completed system ready for installation of cables in accordance with the plans and specifications. This item shall also include furnishing and installing conduits and all incidentals for providing positive drainage of the system. Verification of existing ducts is incidental to the pay items provided in this specification.

EQUIPMENT AND MATERIALS

110-2.1 GENERAL.

a. All equipment and materials covered by referenced specifications shall be subject to acceptance through manufacturer's certification of compliance with the applicable specification when so requested by the Engineer.

b. Manufacturer's certifications shall not relieve the Contractor of the Contractor’s responsibility to provide materials in accordance with these specifications and acceptable to the Engineer. Materials supplied and/or installed that do not materially comply with these specifications shall be removed, when directed by the Engineer and replaced with materials, which do comply with these specifications, at the sole cost of the Contractor.

c. All materials and equipment used to construct this item shall be submitted to the Engineer for approval prior to ordering the equipment. Submittals consisting of marked catalog sheets or shop drawings shall be provided. Submittal data shall be presented in a clear, precise and thorough manner. Original catalog sheets are preferred. Photocopies are acceptable provided they are as good a quality as the original. Clearly and boldly mark each copy to identify pertinent products or models applicable to this project. Indicate all optional equipment and delete non-pertinent data. Submittals for components of electrical equipment and systems shall identify the equipment for which they apply on each submittal sheet. Markings shall be boldly and clearly made with arrows or circles (highlighting is not acceptable). Contractor is solely responsible for delays in project accruing directly or indirectly from late submissions or resubmissions of submittals.

d. The data submitted shall be sufficient, in the opinion of the Engineer, to determine compliance with the plans and specifications. [The Contractor's submittals shall be neatly bound in a properly sized 3-ring binder, tabbed by specification section.] The Engineer reserves the right to reject any and all equipment, materials or procedures, which, in the Engineer’s opinion, does not meet the system design and the standards and codes, specified herein.

e. All equipment and materials furnished and installed under this section shall be guaranteed against defects in materials and workmanship for a period of at least [twelve (12) months] from final acceptance by the Owner. The defective materials and/or equipment shall be repaired or replaced, at the Owner's discretion, with no additional cost to the Owner.

* * * *

The length of time for guarantee of materials and workmanship should be as stated in the contract between the owner and contractor and the contract special provisions.

* * * *

* * * *

Unless otherwise shown on the plans, concrete encased duct banks shall be utilized when crossing under pavements expected to carry aircraft loads.

Where turf is well established and the sod can be removed, it shall be carefully stripped and properly stored.

Trenches for conduits and duct banks may be excavated manually or with mechanical trenching equipment unless in pavement, in which case they shall be excavated with mechanical trenching equipment. Walls of trenches shall be essentially vertical so that a minimum of shoulder surface is disturbed. Blades of graders shall not be used to excavate the trench.

When rock is encountered, the rock shall be removed to a depth of at least 3 inches below the required conduit or duct bank depth and it shall be replaced with bedding material of earth or sand containing no mineral aggregate particles that would be retained on a 1/4-inch sieve. Flowable backfill may alternatively be used The Contractor shall ascertain the type of soil or rock to be excavated before bidding. All such rock removal shall be performed and paid for under Item P-152.

Underground electrical warning (caution) tape shall be installed in the trench above all underground duct banks and conduits in unpaved areas. Contractor shall submit a sample of the proposed warning tape for approval by the Engineer. If not shown on the plans, the warning tape shall be located six inches above the duct/conduit or the counterpoise wire if present.

Joints in plastic conduit shall be prepared in accordance with the manufacturer's recommendations for the particular type of conduit. Plastic conduit shall be prepared by application of a plastic cleaner and brushing a plastic solvent on the outside of the conduit ends and on the inside of the couplings. The conduit fitting shall then be slipped together with a quick one-quarter turn twist to set the joint tightly. Where more than one conduit is placed in a single trench, or in duct banks, joints in the conduit shall be staggered a minimum of 2 feet.

Changes in direction of runs exceeding 10 degrees, either vertical or horizontal, shall be accomplished using manufactured sweep bends.

Whether or not specifically indicated on the drawings, where the soil encountered at established duct bank grade is an unsuitable material, as determined by the Engineer, the unsuitable material shall be removed in accordance with Item P-152 and replaced with suitable material. Alternatively, additional duct bank supports that are adequate and stable shall be installed, as approved by the Engineer.

All excavation shall be unclassified and shall be considered incidental to the respective L-110 pay item of which it is a component part. Dewatering necessary for duct installation, erosion and turbidity control, in accordance with Federal, State, and Local requirements is incidental to its respective pay item as a part of Item L-110. The cost of all excavation regardless of type of material encountered, shall be included in the unit price bid for the L-110 Item.

Unless otherwise specified, excavated materials that are deemed by the Engineer to be unsuitable for use in backfill or embankments shall be removed and disposed of off site.

Any excess excavation shall be filled with suitable material approved by the Engineer and compacted in accordance with item P-152.

It is the Contractor's responsibility to locate existing utilities within the work area prior to excavation. Where existing active cables) cross proposed installations, the Contractor shall insure that these cable(s) are adequately protected. Where crossings are unavoidable, no splices will be allowed in the existing cables, except as specified on the plans. Installation of new cable where such crossings must occur shall proceed as follows:

(1) Existing cables shall be located manually. Unearthed cables shall be inspected to assure absolutely no damage has occurred

(2) Trenching, etc., in cable areas shall then proceed with approval of the Engineer, with care taken to minimize possible damage or disruption of existing cable, including careful backfilling in area of cable.

In the event that any previously identified cable is damaged during the course of construction, the Contractor shall be responsible for the complete repair.

110-3.2 DUCT BANKS. Unless otherwise shown in the plans, duct banks shall be installed so that the top of the concrete envelope is not less than 18 inches (45 cm) below the bottom of the base or stabilized base course layers where installed under runways, taxiways, aprons, or other paved areas, and not less than 18 inches (45 cm) below finished grade where installed in unpaved areas.

Unless otherwise shown on the plans, duct banks under paved areas shall extend at least 3 feet (90 cm) beyond the edges of the pavement or 3 feet (90 cm) beyond any underdrains that may be installed alongside the paved area. Trenches for duct banks shall be opened the complete length before concrete is placed so that if any obstructions are encountered, proper provisions can be made to avoid them. Unless otherwise shown on the plans, all duct banks shall be placed on a layer of concrete not less than 3 inches (75 mm) thick prior to its initial set. Where two or more conduits in the duct bank are intended to carry conductors of equivalent voltage insulation rating, the Contractor shall space the conduits not less than 1-1/2 inches (37 mm) apart (measured from outside wall to outside wall). Where two or more conduits in the duct bank are intended to carry conductors of differing voltage insulation rating, the Contractor shall space the conduits not less than 3 inches apart (measured from outside wall to outside wall). All such multiple conduits shall be placed using conduit spacers applicable to the type of conduit. As the conduit laying progresses, concrete shall be placed around and on top of the conduits not less than 3 inches (75 mm) thick unless otherwise shown on the plans. End bells or couplings shall be installed flush with the concrete encasement at access points.

Conduits forming the duct bank shall be installed using conduit spacers. No. 4 reinforcing bars shall be driven vertically into the soil a minimum of 6 inches to anchor the assembly into the earth prior to placing the concrete encasement. For this purpose, the spacers shall be fastened down with locking collars attached to the vertical bars. Spacers shall be installed at 5 -foot intervals. Spacers shall be in the proper sizes and configurations to fit the conduits. Locking collars and spacers shall be submitted to the Engineer for review prior to use.

When specified, the Contractor shall reinforce the bottom side and top of encasements with steel reinforcing mesh or fabric or other approved metal reinforcement. When directed, the Contractor shall supply additional supports where the ground is soft and boggy, where ducts cross under roadways, or where shown on the plans. Under such conditions, the complete duct structure shall be supported on reinforced concrete footings, piers, or piles located at approximately 5 foot (150 cm) intervals.

All pavement surfaces that are to have ducts installed therein shall be neatly saw cut to form a vertical face. All excavation shall be included in the contract with price for the duct.

Install a plastic, detectable, color as noted, 4-6 inch (75-150mm) wide tape 8 inches (200mm) minimum below grade above all underground conduit or duct lines not installed under pavement.

When existing cables are to be placed in split duct, encased in concrete, the cable shall be carefully located and exposed by hand tools. Prior to being placed in duct, the Engineer shall be notified so that he may inspect the cable and determine that it is in good condition. Where required, split duct shall be installed as shown on the drawings or as required by the Engineer.

110-3.3 CONDUITS WITHOUT CONCRETE ENCASEMENT. Trenches for single-conduit lines shall be not less than 6 inches (150 mm) nor more than 12 inches (300 mm) wide, and the trench for 2 or more conduits installed

at the same level shall be proportionately wider. Trench bottoms for conduits without concrete encasement shall be made to conform accurately to grade so as to provide uniform support for the conduit along its entire length.

Unless otherwise shown on the plans, a layer of fine earth material, at least 4 inches (100 mm) thick (loose measurement) shall be placed in the bottom of the trench as bedding for the conduit. The bedding material shall consist of soft dirt, sand or other fine fill, and it shall contain no particles that would be retained on a 1/4-inch (6 mm) sieve. The bedding material shall be tamped until firm. Flowable backfill may alternatively used.

Unless otherwise shown on plans, conduits shall be installed so that the tops of all conduits are at least 18 inches (45 cm) below the finished grade.

When two or more individual conduits intended to carry conductors of equivalent voltage insulation rating are installed in the same trench without concrete encasement, they shall be spaced not less than 2 inches (50 mm) apart (measured from outside wall to outside wall) in a horizontal direction and not less than 6 inches (150 mm) apart in a vertical direction. Where two or more individual conduits intended to carry conductors of differing voltage insulation rating are installed in the same trench without concrete encasement, they shall spaced not less than 3 inches (75 mm) apart (measured from outside wall to outside wall) in a horizontal direction and lot less than 6 inches (150 mm) apart in a vertical direction.

Trenches shall be opened the complete length between normal termination points before conduit is installed so that if any unforeseen obstructions are encountered, proper provisions can be made to avoid them.

Conduits shall be installed using conduit spacers. No. 4 reinforcing bars shall be driven vertically into the soil a minimum of 6 inches to anchor the assembly into the earth while backfilling. For this purpose, the spacers shall be fastened down with locking collars attached to the vertical bars. Spacers shall be installed at 5 -foot intervals. Spacers shall be in the proper sizes and configurations to fit the conduits. Locking collars and spacers shall be submitted to the Engineer for review prior to use.

110-3.4 MARKERS. The location of each end and of each change of direction of conduits and duct banks shall be marked by a concrete slab marker 2 feet (60 cm) square and 4-6 inches (100-150 mm) thick extending approximately 1 inch (25 mm) above the surface. The markers shall also be located directly above the ends of all conduits or duct banks, except where they terminate in a junction/access structure or building.

The Contractor shall impress the word “DUCT” or “CONDUIT” on each marker slab. The Contractor shall also impress on the slab the number and size of conduits beneath the marker along with all other necessary information as determined by the Engineer. The letters shall be 4 inches (100 mm) high and 3 inches (75 mm) wide with width of stroke 1/2-inch (12 mm) and 1/4-inch (6 mm) deep or as large as the available space permits. Furnishing and installation of duct markers is incidental to the respective duct pay item.

110-3.5 BACKFILLING FOR CONDUITS. For conduits, 8 inches (200 cm) of sand, soft earth, or other fine fill (loose measurement) shall be placed around the conduits ducts and carefully tamped around and over them with hand tampers. The remaining trench shall then be backfilled and compacted in accordance with Item P-152 "Excavation and Embankment" except that material used for back fill shall be select material not larger than 4 inches in diameter.

Flowable backfill may alternatively be used

Trenches shall not contain pools of water during back, filling operations.

The trench shall be completely backfilled and tamped level with the adjacent surface: except that, where sod is to be placed over the trench, the backfilling shall be stopped at a depth equal to the thickness of the sod to be used, with proper allowance for settlement.

Any excess excavated material shall be removed and disposed of in accordance with instructions issued by the Engineer.

110-3.6 BACKFILLING FOR DUCT BANKS. After the concrete has cured, the remaining trench shall be backfilled and compacted in accordance with Item P-152 "Excavation and Embankment" except that the material used for backfill shall be select material not larger than 4 inches in diameter. In addition to the requirements of P-152, where duct banks are installed under pavement, one moisture/density test per lift shall be made for each 250 linear feet of duct bank or one work period's construction, whichever is less.

Flowable backfill may alternatively be used

Trenches shall not contain pools of water during backfilling operations.

The trench shall be completely backfilled and tamped level with the adjacent surface: except that, where sod is to be placed over the trench, the backfilling shall be stopped at a depth equal to the thickness of the sod to be used, with proper allowance for settlement.

Any excess excavated material shall be removed and disposed of in accordance with instructions issued by the Engineer.

110-3.7 RESTORATION. Where sod has been removed, it shall be replaced as soon as possible after the backfilling is completed. All areas disturbed by the work shall be restored to its original condition. The restoration shall include **[sodding] [topsoiling] [fertilizing] [liming] [seeding] [sprigging] [mulching]** shown on the plans. The Contractor shall be held responsible for maintaining all disturbed surfaces and replacements until final acceptance. All restoration shall be considered incidental to the respective L-110 pay item.

* * * *

MATERIAL REQUIREMENTS

Fed.Spec.W-C-1094	Conduit and Conduit Fittings; Plastic, Rigid (cancelled; replaced by UL 514 Boxes, Nonmetallic Outlet, Flush Device Boxes, & Covers, and UL 651 Standard for Conduit & Hope Conduit, Type EB & A Rigid PVC)
Underwriters Laboratories Standard 6	Rigid Metal Conduit
Underwriters Laboratories Standard 514B	Fittings for Cable and Conduit
Underwriters Laboratories Standard 1242	Intermediate Metal Conduit
Underwriters Laboratories Standard 651	Schedule 40 and 80 Rigid PVC Conduit (for Direct Burial)
Underwriters Laboratories Standard 651A	Type EB and A Rigid PVC Conduit and HDPE Conduit (for concrete encasement)

END OF ITEM L-110

ITEM L-115 ELECTRICAL MANHOLES AND JUNCTION STRUCTURES

DESCRIPTION

115-1.1 This item shall consist of electrical manholes and junction structures (handholes, pullboxes, junction cans, etc.) installed in accordance with this specification, at the indicated locations and conforming to the lines, grades and dimensions shown on the plans or as required by the Engineer. This item shall include the installation of each electrical manhole and/or junction structures with all associated excavation, backfilling, sheeting and bracing, concrete, reinforcing steel, ladders, appurtenances, testing, dewatering and restoration of surfaces to the satisfaction of the Engineer.

EQUIPMENT AND MATERIALS

115-2.1 GENERAL.

a. All equipment and materials covered by referenced specifications shall be subject to acceptance through manufacturer's certification of compliance with the applicable specification when so requested by the Engineer.

b. Manufacturer's certifications shall not relieve the Contractor of the Contractor's responsibility to provide materials in accordance with these specifications and acceptable to the Engineer. Materials supplied and/or installed that do not materially comply with these specifications shall be removed, when directed by the Engineer and replaced with materials, which do comply with these specifications, at the sole cost of the Contractor.

c. All materials and equipment used to construct this item shall be submitted to the Engineer for approval prior to ordering the equipment. Submittals consisting of marked catalog sheets or shop drawings shall be provided. Submittal data shall be presented in a clear, precise and thorough manner. Original catalog sheets are preferred. Photocopies are acceptable provided they are as good a quality as the original. Clearly and boldly mark each copy to identify pertinent products or models applicable to this project. Indicate all optional equipment and delete non-pertinent data. Submittals for components of electrical equipment and systems shall identify the equipment for which they apply on each submittal sheet. Markings shall be boldly and clearly made with arrows or circles (highlighting is not acceptable). Contractor is solely responsible for delays in project accruing directly or indirectly from late submissions or resubmissions of submittals.

d. The data submitted shall be sufficient, in the opinion of the Engineer, to determine compliance with the plans and specifications. [The Contractor's submittals shall be neatly bound in a properly sized 3-ring binder, tabbed by specification section.] The Engineer reserves the right to reject any and all equipment, materials or procedures, which, in the Engineer's opinion, does not meet the system design and the standards and codes, specified herein.

e. All equipment and materials furnished and installed under this section shall be guaranteed against defects in materials and workmanship for a period of at least [twelve (12) months] from final acceptance by the Owner. The defective materials and/or equipment shall be repaired or replaced, at the Owner's discretion, with no additional cost to the Owner.

* * * *

Provide precast concrete structures where shown on the plans. Precast concrete structures shall be an approved standard design of the manufacturer. Precast units shall have mortar or bitumastic sealer placed between all joints to make them watertight. The structure shall be designed to withstand [ZZZ lb aircraft] loads, unless otherwise shown on the plans. Openings or knockouts shall be provided in the structure as detailed on the plans.

* * * *

* * * *

* * * *

115-3.4 PLACEMENT AND TREATMENT OF CASTINGS, FRAMES AND FITTINGS. All castings, frames and fittings shall be placed in the positions indicated on the Plans or as directed by the Engineer and shall be set true to line and to correct elevation. If frames or fittings are to be set in concrete or cement mortar, all anchors or bolts shall be in place and position before the concrete or mortar is placed. The unit shall not be disturbed until the mortar or concrete has set.

Field connections shall be made with bolts, unless indicated otherwise. Welding will not be permitted unless shown otherwise on the approved shop drawings and written permission is granted by the casting manufacturer. Erection equipment shall be suitable and safe for the workman. Errors in shop fabrication or deformation resulting from handling and transportation that prevent the proper assembly and fitting of parts shall be reported immediately to the Engineer and approval of the method of correction shall be obtained. Approved corrections shall be made at Contractor's expense.

Anchor bolts and anchors shall be properly located and built into connection work. Bolts and anchors shall be preset by the use of templates or such other methods as may be required to locate the anchors and anchor bolts accurately.

Pulling-in irons shall be located opposite all conduit entrances into structures to provide a strong, convenient attachment for pulling-in blocks when installing cables. Pulling-in irons shall be set directly into the concrete walls of the structure.

115-3.5 INSTALLATION OF LADDERS. Ladders shall be installed such that they may be removed if necessary. Mounting brackets shall be supplied top and bottom and shall be cast in place during fabrication of the structure or drilled and grouted in place after erection of the structure.

115-3.6 REMOVAL OF SHEETING AND BRACING. In general, all sheeting and bracing used to support the sides of trenches or other open excavations shall be withdrawn as the trenches or other open excavations are being refilled. That portion of the sheeting extending below the top of a structure shall be withdrawn, unless otherwise directed, before more than six (6) inches of material is placed above the top of the structure and before any bracing is removed. Voids left by the sheeting shall be carefully refilled with selected material and rammed tight with tools especially adapted for the purpose or otherwise as may be approved.

The Engineer may order the Contractor to delay the removal of sheeting and bracing if, in his judgment, the installed work has not attained the necessary strength to permit placing of backfill.

115-3.7 BACKFILLING. After a structure has been completed, the area around it shall be backfilled in horizontal layers not to exceed 6 inches in thickness measured after compaction to the density requirements in Item P-152. Each layer shall be deposited all around the structure to approximately the same elevation. The top of the fill shall meet the elevation shown on the plans or as directed by the Engineer.

Backfill shall not be placed against any structure until permission is given by the Engineer. In the case of concrete, such permission shall not be given until tests made by the laboratory under supervision of the Engineer establish that the concrete has attained sufficient strength to provide a factor of safety against damage or strain in withstanding any pressure created by the backfill or the methods used in placing it.

Where required, the Engineer may direct the Contractor to add, at his own expense, sufficient water during compaction to assure a complete consolidation of the backfill. The Contractor shall be responsible for all damage or injury done to conduits, duct banks, structures, property or persons due to improper placing or compacting of backfill.

115-3.8 CONNECTION OF DUCT BANKS. To relieve stress of joint between concrete-encased duct banks and structure walls, reinforcement rods shall be placed in the structure wall and shall be formed and tied into duct bank reinforcement at the time the duct bank is installed.

115-3.9 GROUNDING. A ground rod shall be installed in the floor of all concrete structures so that the top of rod extends 6 inches (154 mm) above the floor. The ground rod shall be installed within 1 foot of a corner of the

concrete structure. Ground rods shall be installed prior to casting the bottom slab. Where the soil condition does not permit driving the ground rod into the earth without damage to the ground rod, the Contractor shall drill a 4-inch diameter hole into the earth to receive the ground rod. The hole around the ground rod shall be filled throughout its length, below slab, with Portland cement grout. Ground rods shall be installed in precast bottom slab of structures by drilling a hole through bottom slab and installing the ground rod. Bottom slab penetration shall be sealed watertight with Portland cement grout around the ground rod.

A grounding bus of 4/0 bare stranded copper shall be exothermically bonded to the ground rod and loop the concrete structure walls. The ground bus shall be a minimum of 1 foot above the floor of the structure and separate from other cables. No. 2 AWG bare copper pigtails shall bond the grounding bus to all cable trays and other metal hardware within the concrete structure. Connections to the grounding bus shall be exothermic. Hardware connections may be mechanical, using a lug designed for that purpose.

115-3.10 CLEANUP AND REPAIR. After erection of all galvanized items, damaged areas shall be repaired by applying a liquid cold-galvanizing compound conforming MIL-P-21035. Surfaces shall be prepared and compound applied in accordance with manufacturer's recommendations.

Prior to acceptance, the entire structure shall be cleaned of all dirt and debris.

115-3.11 RESTORATION. After the backfill is completed, the Contractor shall dispose of all surplus material, dirt and rubbish from the site. The Contractor shall restore all disturbed areas equivalent to or better than their original condition. All sodding, grading and restoration shall be considered incidental to the respective L-115 pay item.

The Contractor shall grade around structures as required to provide positive drainage away from the structure.

Areas with special surface treatment, such as roads, sidewalks, or other paved areas shall have backfill compacted to match surrounding areas, and surfaces shall be repaired using materials comparable to original materials.

After all work is completed, the Contractor shall remove all tools and other equipment, leaving the entire site free, clear and in good condition.

115-3.12 INSPECTION. Prior to final approval, the electrical structures shall be thoroughly inspected for conformance with the plans and this specification. Any indication of defects in materials or workmanship shall be further investigated and corrected. The earth resistance to ground of each ground rod shall not exceed 25 ohms. Each ground rod shall be tested utilizing the fall-of-potential ground impedance test as described by ANSI IEEE Standard 81. This test shall be performed prior to establishing connections to other ground electrodes.

115-3.13 Manhole Elevation Adjustments. The Contractor shall adjust the tops of existing manholes in areas designated in the Contract Documents to the new elevations shown. The Contractor shall be responsible for determining the exact height adjustment required to raise the top of each manhole to the new elevations. The existing top elevation of each manhole to be adjusted shall be determined in the field and subtracted/added from the proposed top elevation.

The Contractor shall remove/extend the existing top section or ring and cover on the manhole structure or manhole access. The Contractor shall then install precast concrete sections or grade rings of the required dimensions to adjust the manhole top to the new proposed elevation or shall cut the existing manhole walls to shorten the existing structure, as required by final grades. Finally, the Contractor shall reinstall the manhole top section or ring and cover on top and check the new top elevation.

The Contractor shall construct a concrete slab around the top of adjusted structures located in graded areas that are not to be paved. The concrete slab shall conform to the dimensions shown on the plans.

* * * *

Item L-115-5.2	Electrical Junction Structure [size and type] -Per Each
Item L-115-5.3	Existing Electrical Manhole/Junction Structure Elevation Adjustment [size and type] –Per Each

MATERIAL REQUIREMENTS

ANSI/IEEE Std 81	IEEE Guide for Measuring Earth Resistivity, Ground Impedance, and Earth Surface Potentials of a Ground System
AC 150/5345-7	Specification for L-824 Underground Electrical Cable for Airport Lighting Circuits
AC 150/5345-26	Specification for L-823 Plug and Receptacle Cable Connectors
FED SPEC J-C-30	Cable and Wire, Electrical Power, Fixed Installation (cancelled; replaced by AA-59544 Cable and Wire, Electrical (Power, Fixed Installation))
ASTM B.3	Soft or Annealed Copper Wire
ASTM B.8	Concentric-Lay-Stranded Copper Conductor, Hard, Medium-Hard, or Soft

END OF ITEM L-115

ITEM L-119 AIRPORT OBSTRUCTION LIGHTS

DESCRIPTION

119-1.1 This item shall consist of furnishing and installing obstruction lights in accordance with these specifications. Included in this item shall be the furnishing and installing of wood poles, steel or iron pipes, or other supports as required in the plans or specifications.

This item shall also include all wire and cable connections, the furnishing and installing of all necessary conduits and fittings, insulators, pole steps, pole cross arms, and the painting of poles and pipes. In addition, it includes the furnishing and installing of all lamps and, if required, the furnishing and installing of insulating transformers, the servicing and testing of the installation and all incidentals necessary to place the lights in operation as completed units to the satisfaction of the Engineer.

EQUIPMENT AND MATERIALS

119-2.1 GENERAL.

a. Airport lighting equipment and materials covered by Federal Aviation Administration (FAA) specifications shall be certified and listed under Advisory Circular (AC) 150/5345-53, Airport Lighting Equipment Certification Program.

b. All other equipment and materials covered by other reference specifications shall be subject to acceptance through manufacturer's certification of compliance with the applicable specification when requested by the Engineer.

c. Manufacturer's certifications shall not relieve the Contractor of the Contractor’s responsibility to provide materials in accordance with these specifications and acceptable to the Engineer. Materials supplied and/or installed that do not materially comply with these specifications shall be removed, when directed by the Engineer and replaced with materials, which do comply with these specifications, at the sole cost of the Contractor.

d. All materials and equipment used to construct this item shall be submitted to the Engineer for approval prior to ordering the equipment. Submittals consisting of marked catalog sheets or shop drawings shall be provided. Submittal data shall be presented in a clear, precise and thorough manner. Original catalog sheets are preferred. Photocopies are acceptable provided they are as good a quality as the original. Clearly and boldly mark each copy to identify pertinent products or models applicable to this project. Indicate all optional equipment and delete non-pertinent data. Submittals for components of electrical equipment and systems shall identify the equipment for which they apply on each submittal sheet. Markings shall be boldly and clearly made with arrows or circles (highlighting is not acceptable). Contractor is solely responsible for delays in project accruing directly or indirectly from late submissions or resubmissions of submittals.

e. The data submitted shall be sufficient, in the opinion of the Engineer, to determine compliance with the plans and specifications. [The Contractor's submittals shall be neatly bound in a properly sized 3-ring binder, tabbed by specification section.] The Engineer reserves the right to reject any and all equipment, materials or procedures, which, in the Engineer’s opinion, does not meet the system design and the standards and codes, specified herein.

f. All equipment and materials furnished and installed under this section shall be guaranteed against defects in materials and workmanship for a period of at least [twelve (12) months] from final acceptance by the Owner. The defective materials and/or equipment shall be repaired or replaced, at the Owner's discretion, with no additional cost to the Owner.

* * * *

When obstruction lights are installed on existing telephone or power poles, a large fiber insulating sleeve of adequate diameter and not less than 4-feet (120 cm) long, shall be installed to extend 6 inches (150 mm) above the conductors on the upper cross arm. In addition, the sleeve shall be at least 18 inches (45 cm) below the conductors on the lower crossarm. The details of this installation shall be in accordance with the plans.

119-3.3 INSTALLATION ON BEACON TOWER. Where obstruction lights are installed on a beacon tower, two obstruction lights shall be mounted on top of the beacon tower using 1-inch (25 mm) conduit. The conduit shall screw directly into the obstruction light fixtures and shall support them at a height of not less than 4 inches (100 mm) above the top of the rotating beacon. If obstruction lights are specified at lower levels, the Contractor shall install not less than 1-inch (25 mm) galvanized rigid steel conduit with standard conduit fittings for mounting the fixtures. The fixtures shall be mounted in an upright position in all cases. The conduit shall be fastened to the tower members with "wraplock" straps, clamps, or approved fasteners spaced approximately 5 feet (150 cm) apart. Three coats of aviation-orange paint shall be applied (one prime, one body, and one finish coat) to all exposed material installed.

119 3.4 INSTALLATION ON BUILDINGS, TOWERS, SMOKESTACKS, ETC. Where obstruction lights are to be installed on buildings or similar structures, the installation shall be made in accordance with details shown in the plans. The hub of the obstruction light shall be not less than 1 foot (30 cm) above the highest point of the obstruction except in the case of smokestacks where the uppermost units shall be mounted not less than 5 feet (150 cm), nor more than 10 feet (3 m) below the top of the stack. Conduit supporting the obstruction light units shall be fastened to wooden structures with galvanized steel pipe straps and shall be secured by 1-½ inch (37 mm) No. 10 galvanized wood screws. Conduit shall be fastened to masonry structures by the use of expansion shields, screw anchors, or toggle bolts using No. 10, or larger, galvanized wood or machine screws. Conduit fastened to structural steel shall have the straps held with not less than No. 10 roundhead machine screws in drilled and tapped holes. Fastenings shall be approximately 5 feet (150 cm) apart. Three coats of aviation-orange paint shall be applied (one prime, one body, and one finish coat) to all exposed material installed.

119-3.5 SERIES ISOLATION TRANSFORMERS. The L-810 series obstruction light does not include a film cutout; therefore, an isolation transformer is required with each series lamp. Double series units of this type require two series insulating transformers. The transformer shall be housed in a base or buried directly in the earth in accordance with the details shown in the plans.

119-3.6 WIRING. The Contractor shall furnish all necessary labor and materials and shall make complete electrical connections from the underground cable or other source of power in accordance with the wiring diagram furnished with the project plans. If underground cable is required for the power feed and if duct is required under paved areas, the cable and duct shall be installed in accordance with and paid for as described in Item L-108, Underground Power Cable for Airports, and Item L-110, Airport Underground Electrical Duct Banks and Conduit.

119-3.7 LAMPS. The Contractor shall furnish and install in each unit one or two lamps, as required, conforming to the manufacturer's requirements.

119-3.8 TESTS. The installation shall be fully tested by continuous operation for not less than 1/2 hour as a completed unit prior to acceptance. These tests shall include the functioning of each control not less than 10 times.

METHOD OF MEASUREMENT

119-4.1 The quantity of lights to be paid for under this item shall be the number of single- or double-type obstruction lights installed and accepted as completed units, in place, ready for operation.

BASIS OF PAYMENT

119-5.1 Payment will be made at the contract unit price for each completed obstruction light installed, in place by the Contractor, and accepted by the Engineer. This price shall be full compensation for furnishing all materials and for all preparation, assembly, and installation of these materials, and for all labor, equipment, tools, and incidentals necessary to complete this item.

Payment will be made under:

Item L-119-5.1	Airport Obstruction Light, in Place-per each

MATERIAL REQUIREMENTS

AC 150/5345-7	Specification for L-824 Underground Electrical Cable for Airport Lighting Circuits
AC 150/5345-42	Specification for Airport Light Base and Transformer Housing, Junction Boxes, and Accessories
AC 150/5345-43	Specification for Obstruction Lighting Equipment
AC 150/5345-47	Isolation Transformers for Airport Lighting Systems
ANSI/ICEA S-70-547-1992	Weather-Resistant Polyolefin-Covered Wire and Cable
FED SPEC J-C-30	Cable and Wire, Electrical (Power, Fixed Installation) (cancelled; replaced by AA-59544 Cable and Wire, Electrical (Power, Fixed Installation))

END OF ITEM L-119