E2 BEARING & SHEAR KEY ANCHOR RODS

(2010) – 192 Rods

Fabrication and Installation Processes

STATE OF CALIFORNIA

DEPARTMENT OF TRANSPORTATION

NOTICE TO CONTRACTORS

AND

SPECIAL PROVISIONS

FOR CONSTRUCTION ON STATE HIGHWAY IN

SAN FRANCISCO COUNTY IN SAN FRANCISCO

FROM 0.6 KM TO 1.3 KM EAST OF THE YERBA BUENA TUNNEL EAST PORTAL

DISTRICT 04, ROUTE 80

For Use in Connection with Standard Specifications Dated JULY 1999, Standard Plans Dated JULY 1999, and Labor Surcharge and Equipment Rental Rates.

CONTRACT NO. 04-0120F4

04-SF-80-13.2/13.9

Bids Open: February 1, 2006
Dated: August 1, 2005

OSD

10-1.47 SPHERICAL BUSHING BEARING (PIER E2)

This work shall consist of fabricating and installing the spherical bushing bearing on Pier E2 in conformance with details shown on the plans and the requirements of these special provisions.

The spherical bushing bearing consists of spherical bushing assembly, bearing top housing, bearing bottom housing, bearing hold down assembly, retaining ring plates, solid shaft, dust cover, base plate, bearing plate, anchor bolts, and assembly bolts. The lubricant shall be self-lubricated and shall be provided for all bronze surfaces and other surfaces as shown on the plans. Bearings shall be anchored in place with high strength non-shrink grout.

Spherical bushing bearings shall be furnished and installed at Pier E2.

GENERAL

Attention is directed to "Steel Structures," of these special provisions for steel casting requirements.

Attention is directed to "Shear Key (Pier E2)," of these special provisions for additional installation requirements.

Attention is directed to "Lubricant and Test," of these special provisions.

The design loads, design rotations, design displacements, and alignment tolerances shall conform to the values as shown on the plans.

WORKING DRAWINGS

The Contractor shall submit working drawings in conformance with the provisions in "Working Drawings," of these special provisions.

Working drawings shall include complete details, information, drawings, and substantiating calculations of the spherical bushing bearing and its components and the method, materials, equipment, and procedures of fabrication and installation that the Contractor proposes to use including the placement of high strength non-shrink grout.

Working drawing submittals shall include the following:

A. Bearing fabrication plans for all bearings including complete details for each component.
B. All ASTM, AASHTO, or other material designations including dust cover and its connection to other bearing components, and retaining ring plates.
C. The bushing wall thickness, fits, and tolerances.
D. Storage and shipping plans including details of handling and supporting of the bearings. Each bearing shipment shall be accompanied by a Certificate of Compliance in conformance with the provisions in Section 6-l.07, "Certificates of Compliance," of the Standard Specifications. The certificate shall state that the materials and fabrication involved comply in all respects to the specifications and data submitted in obtaining approval.
E. Installation plans including the following:

    1. Method, materials, equipment, sequence, detailed procedures, and temporary support details that the Contractor proposes to use for installation of the spherical bushing bearing. The Contractor's proposed spherical bushing bearing installation including the solid shaft press fit shall not damage the lubricant at any given time during the installation. The Contractor's proposed spherical bushing bearing installation procedures and sequences shall be detailed in the superstructure construction sequences as specified in these special provisions.
    2. The Contractor's calculated relative distances for a) relative distance between the centerline of E2 floor beam at box girder (normal to vertical profile) and the centerline of Pier E2 (vertical); distance is measured in the longitudinal direction along the top horizontal surface of concrete crossbeam, and b) relative distance between centerline of longitudinal shear plates (normal to cross slope) and centerline of Pier E2 (vertical); distance is measured in the transverse direction along the top sloped surface of the concrete crossbeam.

F. Details of lifting locations and mechanisms.

A supplement to the working drawings shall include the following:

A. The quality control plan (QCP). The QCP of the spherical bushing bearings shall conform to the requirements in "Quality Control" of these special provisions and shall include descriptions, details, and procedures for the fabrication and installation of the spherical bushing bearings, except that the portion of the QCP for welding shall be submitted separately in conformance with "Welding" in these special provisions.
B. The manufacturer of the spherical bushing bearing shall submit to the Engineer a manual for the bearing inspection, maintenance, and replacement. This manual shall include:

    1. A record of spherical bushing bearing for each component including the tracing of all components during the fabrication and installation of spherical bushing bearing.

2. Recommended life expectancy for each bearing component.
3. Recommended frequency for bearing inspection and maintenance schedule.
4. Procedures and details to perform the bearing inspection and maintenance.
5. List of indication of bearing defects and the associated repair methods, if applicable.
6. Procedures and sequences for bearing replacement including locations of temporary support, estimate of jacking load for each temporary support location, sequences and methods of detensioning anchor bolts, method of debonding between concrete and base plates and anchor bolts, method of removing and replacing bearings, a list of equipment to be used for bearing replacement, and traffic, safety, and environmental impact.

Each working drawing and calculation sheet shall be signed by an engineer who is registered as a Civil Engineer or Mechanical Engineer in the State of California. After complete working drawings and supplement are received by the Engineer, the Contractor shall allow the Engineer 40 days to review the submittal

Upon completion of installation, the Contractor shall submit to the Engineer certification stating that each spherical bushing bearing has been installed in accordance with the approved working drawings and supplements installation procedure.

MATERIALS

The materials specifications of spherical bushing bearing components shall conform to the following table:

Component	ASTM Specifications
Anchor Bolts	A354, Grade BD
Assembly Bolts	A240, Type 316
Bearing Plate	B22-C86300
Spherical Housing	A744, Grade CF-8M
Spherical Ball	B271-C86300
Solid Shaft	Structural Casting, Grade 550
Bearing Bottom Housing	Structural Casting, Grade 550
Bearing Top Housing	Structural Casting, Grade 345
Bearing Hold Down Assembly	Structural Casting, Grade 345

Attention is directed to "Welding" and "Audits" of these special provisions.

Attention is directed to "Lubricant and Test" of these special provisions.

Prestressing operation of anchor bolts shall conform to the requirements in "Prestressing Concrete," elsewhere in these special provisions.

High strength nonshrink grout shall conform to the requirements in "High Strength Nonshrink Grout," elsewhere in these special provisions.

Steel components including plates and anchor bolts shall conform to the details shown on the plans, the provisions in "Steel Structures," of the Standard Specifications, and these special provisions.

Clean and paint spherical bushing bearing shall conform to the requirements in "Clean and Paint Structural Steel (Seismic Joint, Spherical Bushing Bearing, and Shear Key)," of these special provisions.

The bronze alloy for the spherical ball and ring bushing shall be high strength manganese bronze centrifugally cast conforming to the requirements of ASTM Designation: B271-C86300. The stainless steel for the spherical housing shall be centrifugally cast conforming to the requirements of ASTM Designation: A744 Grade CF-8F. All items integral to and for the assembly of the bearing shall be stainless steel conforming to ASTM Designation: A 240, Type 304 or Type 316.

The bushing wall thickness, fits, and tolerances shall be as recommended by the manufacturer and specified in the working drawings and supplement.

QUALITY CONTROL

Quality Control (QC) shall be the responsibility of the Contractor. Quality Control shall be performed by an entity having a line of responsibility distinctly different from that of the manufacturer's fabrication department. As a minimum, the Contractor shall perform inspection and testing prior to fabrication, during fabrication, and after fabrication as specified herein and additionally as necessary to ensure that materials and workmanship conform to the requirements of the contract documents. Quality Control shall apply to each component of the spherical bushing bearing in addition to the assembly, shipping and installation of the bearing.

The QC Inspector shall be the duly designated person who acts for and on behalf of the Contractor for inspection, testing, and quality related matters for all fabrication.

Quality Assurance (QA) is the prerogative of the Engineer. The QA Inspector is the duly designated person who acts for and on behalf of the Engineer.

Each QC Inspector shall be responsible for quality control acceptance or rejection of materials and workmanship.

The Contractor shall provide sufficient number of QC Inspectors to ensure continuous inspection.

The Contractor shall designate in writing a Quality Control Manager (QCM). The QCM shall be responsible directly to the Contractor for the quality of the fabrication, including materials and workmanship, performed by the Contractor and subcontractors.

The QCM shall be the sole individual responsible to the Contractor for submitting and receiving all correspondences, required submittals, and reports to and from the Engineer.

The Contractor shall submit to the Engineer 3 copies of Quality Control Plan (QCP), in conformance with the requirements in "Working Drawings," of these special provisions. As a minimum, each QCP shall include the following:

A. A manual including equipment, testing procedures, and code of safe practices.
B. The names, qualifications, and documentation of certifications for the QCM and all QC Inspectors.
C. An organizational chart showing all QC personnel and their assigned QC responsibilities.
D. The methods and frequencies for performing all required quality control procedures, including QC inspection forms to be used, as required by the specifications including:

    1. All visual inspections.
    2. Tests.
    3. Calibration procedures and calibration frequency for all equipment.

E. Forms to be used for Certificates of Compliance, monthly production logs, and monthly reports.
F. Mill certificates and material certificates.
G. Shipping plan.
H. Installation plan.

Prior to submitting the QCP, a pre-fabrication meeting between the Engineer, Contractor, and fabricator, any entity performing spherical bushing bearing component fabrication or subcontractor to the Fabricator, shall be held to discuss the requirements for the QCP. The pre-fabrication meeting shall be held in San Francisco Bay Area.

After a complete QCP is submitted, the Contractor shall allow the Engineer 10 days to review the submittal. An amended QCP or addendum shall be submitted to, and approved in writing by the Engineer, for proposed revisions to the approved QCP. The Contractor shall allow the Engineer 10 days to complete the review of the amended QCP or addendum.

After final approval of the QCP, amended QCP, or addendum, the Contractor shall submit 7 copies to the Engineer of each of these approved documents.

It is expressly understood that the Engineer's approval of the Contractor's QCP shall not relieve the Contractor of any responsibility under the contract for the successful completion of the work in conformity with the requirements of the plans and specifications. The Engineer's approval shall not constitute a waiver of any requirement of the plans and specifications nor relieve the Contractor of any obligation thereunder, and defective work, materials, and equipment may be rejected notwithstanding approval of the QCP.

A monthly production log for fabrication shall be kept by the QCM for each day that fabrication is performed. The monthly report from each QC Inspector shall be included in the log.

The QCM shall sign and furnish to the Engineer, a Certificate of Compliance in conformance with the provisions in Section 6-1.07, "Certificates of Compliance," of the Standard Specifications for each spherical bushing bearing. The certificate shall state that all of the materials and workmanship incorporated in the work, and all required tests and inspections of this work have been performed in conformance with the details shown on the plans and approved working drawings and the provisions of the Standard Specifications and these special provisions.

FABRICATION AND INSTALLATION

Attention is directed to "Steel Structures," of these special provisions for fabrication and installation of spherical bushing bearings at Pier E2. The Contractor shall also conform to the requirements specified herein.

Conformance with the requirements in SSPC-QP 1, SSPC-QP 2, and SSPC-QP 3 of the "SSPC: The Society for Protective Coatings" will not be required for spherical bushing bearings.

Finish coats will not be required on the bearings.

Each bearing shall be marked for location and orientation in conformance with the approved working drawing and supplement. Bearings shall be secured to shipping skids in a manner that assures protection during transportation and off-loading. Each skid shall be wrapped in moisture proof and dust proof covers at all times until immediately before installation.

The retainer ring, boss plate, pin, and spacer pipe shall conform to ASTM Specifications as shown on the plans.

FABRICATION AND INSTALLATION

Attention is directed to Section, "Steel Structures," of these special provisions for fabrication and installation of tower cross bracing spherical bushing bearings. The Contractor shall also conform to the requirements specified herein.

The coefficient of friction for bearing lubricant shall be equal or less than 0.10.

Conformance with the requirements in SSPC-QP 1, SSPC-QP 2, and SSPC-QP 3 of the "SSPC: The Society for Protective Coatings" will not be required for tower cross bracing spherical bushing bearings.

Finish coats will not be required on the bearings.

The Contractor shall provide the rubber covers to tower cross bracing spherical bushing bearings to seal the bearings with the details in the approved working drawings and supplement.

Each bearing shall be marked for location and orientation in conformance with the approved working drawing and supplement. Bearings shall be secured to shipping skids in a manner that assures protection during transportation and off-loading. Each skid shall be wrapped in moisture proof and dust proof covers at all times until immediately before installation.

Damaged bearings shall be replaced.

A qualified representative of the manufacturer shall be present during installation of all tower cross bracing spherical bushing bearings.

Full compensation for fabricating tower cross bracing spherical bushing bearing shall be considered as included in the contract prices paid per kilogram for furnish structural steel (bridge) (tower), and no separate payment will be made therefor.

Full compensation installing tower cross bracing spherical bushing bearing shall be considered as included in the contract prices paid per kilogram for erect structural steel (bridge) (tower), and no separate payment will be made therefor.

10-1.50 SHEAR KEY (PIER E2)

This work shall consist of fabricating, testing, and installing the shear key on Pier E2 in conformance with details shown on the plans and the requirements of these special provisions.

The shear key consists of shear key housing with nut retainer assemblies, shear key stub, spherical ring with retainer brackets, spherical housing, bearing plates, shim plates, neoprene pads, dust cover, anchor bolts, high-strength bolts, and assembly bolts. The lubricant shall be self-lubricated and shall be provided for all bronze surfaces and other surfaces as shown on the plans. Shear keys shall be anchored in place with high strength non-shrink grout.

The shear key bushing consists of spherical ring, spherical housing, and bearing plates.

Shear keys shall be furnished and installed at Pier E2.

GENERAL

Attention is directed to "Steel Structures," of these special provisions for steel casting requirements.

Attention is directed to "Spherical Bushing Bearing (Pier E2)," of these special provisions for additional installation requirements.

The design loads, design rotations, design displacements, and alignment tolerances shall conform to the values shown on the plans.

WORKING DRAWINGS

The Contractor shall submit working drawings in conformance with the provisions in "Working Drawings," of these special provisions.

Working drawings shall include complete details, information, drawings, and substantiating calculations of the shear key and its components and the method, materials, equipment, and procedures of fabrication and installation that the Contractor proposes to use including the placement of high strength non-shrink grout.

Working drawing submittals shall include the following:

A. Shear key fabrication plans including complete details for each component.
B. All ASTM, AASHTO, or other material designations including dust cover and its connection to other shear key components.
C. Storage and shipping plans including details of handling and supporting of the shear keys. Each shear key shipment shall be accompanied by a Certificate of Compliance in conformance with the provisions in Section 6-l.07, "Certificates of Compliance," of the Standard Specifications. The certificate shall state that the materials and fabrication involved comply in all respects to the specifications and data submitted in obtaining approval.
D. Installation plans including the following:

1. Method, materials, equipment, sequence, detailed procedures, and temporary support details that the Contractor proposes to use for installation of the shear key. The Contractor's proposed shear key installation procedures and sequences shall be detailed in the superstructure construction sequences as specified elsewhere in these special provisions.
2. The Contractor's calculated relative distances for a) relative distance between the centerline of Pier E2 floor beam at box girder (normal to vertical profile) and the centerline of Pier E2 (vertical); distance is measured in the longitudinal direction along the top horizontal surface of concrete crossbeam, and b) relative distance between centerline of box girder (normal to cross slope) and centerline of Pier E2 (vertical); distance is measured in the transverse direction along the top sloped surface of the concrete crossbeam.

E. Details of lifting locations and mechanisms.

A supplement to the working drawings shall include the following:

A. The quality control plan (QCP). The QCP of the shear keys shall conform to the requirements in "Quality Control" of these special provisions and shall include descriptions, details, and procedures for the fabrication and installation of the shear keys, except that the portion of the QCP for welding shall be submitted separately in conformance with "Welding" of these special provisions.
B. The Contractor shall submit to the Engineer a manual for the shear key inspection, maintenance, and replacement. This manual shall include:

1. A record of shear key for each component including the tracing of all components during the fabrication and installation of shear key.
2. Recommended life expectancy for each shear key component.
3. Recommended frequency for shear key inspection and maintenance schedule.
4. Procedures and details to perform the shear key inspection and maintenance.
5. List of indication of shear key defects and the associated repair methods, if applicable.
6. Procedures and sequences for shear key bushing replacement, a list of equipment to be used for shear key bushing replacement, and traffic, safety, and environmental impact.

Each working drawing and calculation sheet shall be signed by an engineer who is registered as a Civil Engineer or Mechanical Engineer in the State of California.

After complete working drawings and supplement are received by the Engineer, the Contractor shall allow the Engineer 40 days to review the submittal.

Upon completion of installation, the Contractor shall submit to the Engineer certification stating that each shear key has been installed in accordance with the approved working drawings and supplements installation procedure.

MATERIALS

The materials specifications of shear key components shall conform to the following table:

Component	ASTM Specifications
Shear Key Housing, Shear Key Stub, Spherical Ring	Structural Casting, Grade 345
Spherical Housing	High Strength Manganese Bronze Centrifugally Cast, B271-C86300
Anchor Bolts	A354, Grade BD
Assembly Bolts	A240, Type 316
High Strength Bolts	A 325M
Bearing Plate & Shim Plate	A 709M Grade 345

Attention is directed to "Welding" and "Steel Audits" of these special provisions.

Attention is directed to "Lubricant and Test" of these special provisions.

Prestressing operation of anchor bolts shall conform to the requirements in "Prestressing Concrete" of these special provisions.

High strength nonshrink grout shall conform to the requirements in "High Strength Nonshrink Grout" of these special provisions.

Steel components including plates and anchor bolts shall conform to the details shown on the plans, the provisions in "Steel Structures," of the Standard Specifications, and these special provisions.

Neoprene pads shall conform to Section 51-1.145, "Strip Waterstops," of the Standard Specifications and these special provisions. Neoprene pads shall have the following properties:

A. Neoprene shall have a durometer hardness between 25-45
B. The compressive strength shall not exceed 1000 kPa at 50% compression.

A Certificate of Compliance conforming to the provisions in Section 6-1.07, "Certificates of Compliance," shall be furnished to the Engineer certifying that the neoprene to be furnished conforms to the above provisions. The Certificate of Compliance shall be supported by a certified copy of the results of tests performed by the manufacturer on the neoprene pads.

Clean and paint shear key shall conform to the requirements in "Clean and Paint Structural Steel (Seismic Joint, Spherical Bushing Bearing, and Shear Key)," of these special provisions.

The bronze alloy for the spherical housing shall be high strength manganese bronze centrifugally cast conforming to the requirements of ASTM Designation: B271-C86300. The mating surfaces of the spherical ring and bearing plate shall be stainless steel weld overlay conforming to the requirements of ASTM Designation: A240 Type 316. All items integral to and for the assembly of the shear key bushing shall be stainless steel conforming to ASTM Designation: A 240, Type 304 or Type 316.

QUALITY CONTROL

Quality Control (QC) shall be the responsibility of the Contractor. Quality Control shall be performed by an entity having a line of responsibility distinctly different from that of the manufacturer's fabrication department. As a minimum, the Contractor shall perform inspection and testing prior to fabrication, during fabrication, and after fabrication as specified herein and additionally as necessary to ensure that materials and workmanship conform to the requirements of the contract documents. Quality Control shall apply to each component of the shear key in addition to the assembly, shipping and installation of the shear key.

The QC Inspector shall be the duly designated person who acts for and on behalf of the Contractor for inspection, testing, and quality related matters for all fabrication.

Quality Assurance (QA) is the prerogative of the Engineer. The QA Inspector is the duly designated person who acts for and on behalf of the Engineer.

Each QC Inspector shall be responsible for quality control acceptance or rejection of materials and workmanship.

The Contractor shall provide sufficient number of QC Inspectors to ensure continuous inspection.

The Contractor shall designate in writing a Quality Control Manager (QCM). The QCM shall be responsible directly to the Contractor for the quality of the fabrication, including materials and workmanship, performed by the Contractor and subcontractors.

The QCM shall be the sole individual responsible to the Contractor for submitting and receiving all correspondences, required submittals, and reports to and from the Engineer.

The Contractor shall submit to the Engineer 3 copies of Quality Control Plan (QCP), in conformance with the requirements in "Working Drawings," of these special provisions. As a minimum, each QCP shall include the following:

A. A manual including equipment, testing procedures, and code of safe practices.
B. The names, qualifications, and documentation of certifications for the QCM and all QC Inspectors.
C. An organizational chart showing all QC personnel and their assigned QC responsibilities.
D. The methods and frequencies for performing all required quality control procedures, including QC inspection forms to be used, as required by the specifications including:

    1. All visual inspections.
    2. Tests.
    3. Calibration procedures and calibration frequency for all equipment.

E. Forms to be used for Certificates of Compliance, monthly production logs, and monthly reports.
F. Mill certificates and material certificates.
G. Shipping plan.
H. Installation plan.

Prior to submitting the QCP, a pre-fabrication meeting between the Engineer, Contractor, and fabricator, any entity performing shear key component fabrication or subcontractor to the Fabricator, shall be held to discuss the requirements for the QCP. The pre-fabrication meeting shall be held in San Francisco Bay Area.

persons or entities hired by subcontractors who will provide other services or materials for the project, and shall have the following:

A. A tensile testing machine capable of breaking the largest size of reinforcing bar to be tested.
B. Operators who have received formal training for performing the testing requirements of ASTM Designation: A 970/A 970M.
C. A record of annual calibration of testing equipment performed by an independent third party that has 1) standards that are traceable to the National Institute of Standards and Technology, and 2) a formal reporting procedure, including published test forms.

The Engineer shall be notified in writing when any lots of headed bar reinforcement are ready for testing. The notification shall include the number of lots to be tested and the location where the tests are to be conducted. After notification has been received, test samples will be randomly selected by the Engineer from each production lot of headed bar reinforcement which is ready for shipment to the jobsite. If epoxy coating is required, test samples will be taken after the headed bar reinforcement has been prepared for epoxy coating. The Engineer will be at the testing site within a maximum of one week after receiving written notification that the samples are at the testing site and ready for testing. In the event the Engineer fails to be present at the testing site within the time allowed, and if, in the opinion of the Engineer, completion of the work is delayed or interfered with by failure of the Engineer to be present at the testing site, the Contractor will be compensated for any resulting loss in the same manner as provided for in Section 8-1.09, "Right of Way Delays," of the Standard Specifications.

A minimum of 3 samples from each production lot shall be tested. One tensile test shall be conducted on each sample.

Tensile tests shall conform to the requirements specified in ASTM Designation: A 970/A 970M, Section 7, except that at rupture, there shall be visible signs of necking in the reinforcing bar 1) at a minimum distance of one bar diameter away from the head to bar connection for friction welded headed bar reinforcement, or 2) outside the affected zone for integrally forged headed bar reinforcement.

The affected zone for integrally forged headed bar reinforcement is the portion of the reinforcing bar where any properties of the bar, including the physical, metallurgical, or material characteristics, have been altered during the manufacturing process.

If one of the test specimens fails to meet the specified requirements, one retest shall be performed on one additional sample, selected by the Engineer, from the same production lot. If the additional test specimen, or if more than one of the original test specimens fail to meet these requirements, all headed bar reinforcement in the lot represented by the tests will be rejected in conformance with the provisions in Section 6-1.04, "Defective Materials," of the Standard Specifications.

A Production Test Report for all testing performed on each lot shall be prepared by the independent testing laboratory and submitted to the Engineer as specified herein. The report shall be signed by an engineer who represents the laboratory and is registered as a Civil Engineer in the State of California. The report shall include the following information for each set: contract number, bridge number, lot number, bar size, type of headed bar reinforcement, physical conditions of test sample, any notable defects, limits of affected zone, location of visible necking area, and the ultimate strength of each headed bar.

Each unit of headed bar reinforcement in a production lot to be shipped to the site shall be tagged in a manner such that production lots can be accurately identified at the jobsite. All unidentified headed bar reinforcement received at the jobsite will be rejected.

MEASUREMENT AND PAYMENT

Full compensation for headed bar reinforcement shall be considered as included in the contract price paid per kilogram for bar reinforcing steel (bridge) and no separate payment will be made therefor.

Full compensation for epoxy-coated headed bar reinforcement shall be considered as included in the contract price paid per kilogram for bar reinforcing steel (epoxy-coated) (bridge) and no separate payment will be made therefor.

10-1.59 STEEL STRUCTURES

Construction of steel structures shall conform to the provisions in Section 55, "Steel Structures," of the Standard Specifications and these special provisions.

Fabricators and suppliers shall be certified under the AISC Quality Certification Program, Category Cbr, Major Steel Bridges, with endorsement F, Fracture Critical members, except that certification will not be required for fabrication of the tower strut façade and tower skirt. Alternatively, ISO 9001:2000 certification standard may be substituted for the AISC Quality Certification Program.

Details of box girder and crossbeam connections shall conform to the AASHTO Standard Specifications for Highway Bridges, unless otherwise shown on the plans.

Attention is directed to "Accelerated Working Drawings Submittal," of these special provisions.

A. Minimum tension shall be verified using the "Pre-Installation Verification Turn-of-the-Nut Method," of the "Structural Bolting Handbook," published by the Steel Structures Technology Center, Incorporated, except that the required rotation shall be as given in Table 8.2. of this section and the required tension shall be as shown in the following table:

Pre-Installation Verification
Required Tension, N*

Bolt Size, mm	A325M Bolts	A490M Bolts
M16	96 000	120 000
M20	149 000	188 000
M22	185 000	232 000
M24	215 000	270 000
M27	280 000	351 000
M30	342 000	428 000
M36	499 000	625 000
*The above values are 5% higher than the required pretension values used for design, actual installation and inspection, rounded to the nearest kN.		

B. Rotational-capacity tests in accordance with the requirements in Section 11.5.6.4.2 "Rotational-Capacity Tests," of the AASHTO LRFD Bridge Construction Specifications, except that Table 11.5.6.4.1-2 "Nut Rotation from the Snug Condition," is replaced by Table 8.2. of this section.

Test results shall confirm both the minimum bolt tension and the rotational capacity of the bolts. If either test fails, the Contractor shall modify the nut rotation in Table 8.2. of this section until the requirements of both tests are satisfied. No adjustment in compensation will be allowed for modifications to the nut rotations as necessary to satisfy test requirements. Revisions to Table 8.2. shall be approved by the Engineer prior to bolting operations.

The Engineer will randomly sample and perform quality assurance testing of high strength fasteners. Samples will be obtained at locations chosen by the Engineer. The Contractor shall provide the number of bolts specified below to the Engineer for quality assurance testing:

Bolt Sampling Size

Lot Size (No. of Bolts)	Sample Size (No. of Bolts)
2 to 15	3
16 to 25	4
26 to 50	5
51 to 90	7
91 to 150	8
151 to 280	9
281 to 10,000	12
10,001 to 500,000	16
500,001 and over	20

Steel fasteners, designated on the plans as A 354, Grade BC, and A 354, Grade BD, shall conform to the requirements of ASTM Designation: A 354. Steel fastener components for steel fasteners designated as A 354 shall include a bolt, nut and hardened washer. Nuts for steel fasteners designated as A 354 shall conform to Section 55-2.01, "Description," of the Standard Specifications.

Steel fasteners designated on the plans as A 354, Grade BD shall be dry blast cleaned in accordance with the provisions of Surface Preparation Specification No. 10, "Near White Blast Cleaning," of the "SSPC: The Society for Protective Coatings.

Steel fasteners designated on the plans as A 354, Grade BC, and A 354, Grade BD, shall be galvanized in accordance with the requirements in Section 75-1.05, "Galvanizing," of the Standard Specifications and shall conform to the requirements in ASTM Designation: A123 for bolts and ASTM Designation: A153 for nuts and hardware. Steel fastener assemblies designated as A354, Grade BD, shall be galvanized within 4 hours of being dry blast cleaned.

The Contractor shall submit certified test reports showing that the A 354, Grade BD fasteners conform to the provisions in ASTM Designation: A 143.

Steel fasteners, designated on the plans as A 354, Grade BC, and A 354, Grade BD, shall conform to the requirements of ASTM Designation: A 354. Steel fastener components for steel fasteners designated as A 354 shall include a bolt, nut and hardened washer. Nuts for steel fasteners designated as A 354 shall conform to Section 55-2.01, "Description," of the Standard Specifications. Nuts shall be zinc coated and be furnished with a dry lubricant conforming to Supplementary Requirement S1 and S2 in ASTM Designation: A 563.

Steel fasteners designated on the plans as A 354, Grade BD shall be tensioned not less than the value shown on the plans. Prior to installation, the Contractor shall submit to the Engineer for approval the methods and equipment to be used to tension steel fasteners designated as A354, Grade BD in accordance with Section 55-1.02, "Drawings," of the Standard Specifications. Working drawings shall include methods and equipment to be used to evaluate: 1) the presence of a lubricant, 2) the efficiency of the lubricant, and 3) the compatibility of the high strength steel bolt, nut and hardened washer.

Except where sub-punching is permitted, bolt holes shall be drilled or reamed, unless otherwise shown on the plans.

Punching

The first paragraph of Section 55-3.14A(1) "Punching," of the Standard Specifications shall not apply.

Punching or sub-punching of Grade 250 structural steel where the material is thicker than 16 mm will not be permitted. Punching or sub-punching of high-strength structural steel where the material is thicker than 12 mm will not be permitted.

Prestressing High-Strength Bolts

High-strength A354 bolts shall be tensioned by means of hydraulic jacks so that the force in the bolts shall not be less than the value shown on the plans.

The maximum temporary tensile stress (jacking stress) in high-strength bolts shall not exceed 75 percent of the specified minimum ultimate tensile strength of the material. Prestressing forces in high-strength bolts shall consider all losses, including creep of steel, losses due to sequence of stressing, and other losses specific to the method or system of prestressing used by the Contractor.

Hydraulic jacks used for prestressing high-strength bolts shall be calibrated in accordance with the requirements in Section 50-1.08, "Prestressing," of the Standard Specifications.

Final prestressing high strength A354 bolts at the tower anchorage shall be performed after the full dead load is transferred to the cable system.

ASSEMBLY

The method of erection of the suspended structure and tower shall be determined by the Contractor to meet the seismic design load criteria and ensure control of box girder and tower deflections due to wind induced oscillations.

The Contractor shall carry out the necessary structural analyses for the erection procedure to demonstrate the adequacy of the procedure. Details of these analyses and of any supplementary damping or other measures shall be submitted to the Engineer for review and approval.

Wind pressure effects during erection shall be calculated using a gust wind appropriate to a return period of not less than 25 years and shall allow for variation of speed with height per ANSI ASCE 7-95. The 25-year wind corresponds to a 77 mph one-hour average wind speed (and a corresponding 3-second gust wind speed of 100 mph) at deck elevation of 50 meters, as well as a critical flutter wind speed threshold of 112 mph based on a 1000-year return period. The Contractor shall provide temporary connections between adjacent lift sections in order to ensure sufficient torsional stiffness of the suspended structure. The Contractor shall also provide the proper support of the suspended structure during all stages of erection. The Contractor shall similarly ensure control of tower deflections due to wind-induced oscillations at all stages of erection and shall provide holdback stays or other damping devices as necessary. All such temporary measures shall be approved by the Engineer.

Wind design loads may be reduced during lifting operations.

Seismic loading during erection shall conform to the seismic loading requirements specified in "TEMPORARY TOWERS," subsection "TEMPORARY TOWER DESIGN," subsection "Seismic Design Loads," of these special provisions.

The erection procedure shall be such that the maximum stresses in any part of the permanent structure do not cause any permanent deformation or damage. Appropriate values of loads and safety factors for erection loading conditions shall be submitted by the Contractor to the Engineer for review and approval.

The details of any fastenings which the Contractor may require in any part of the permanent works for erection, and the procedure for their removal, shall be submitted to the Engineer for approval.

Tower

Tower lifts shall be in lengths as indicated on the plans. Exterior plates of the tower shafts shall be fabricated with direction of rolling aligned along the vertical direction of the tower. Within each lift, the number of transverse splices of the

Caltrans now has a web site! To get to the web site, go to: http://www.dot.ca.gov

DIST.	COUNTY	ROUTE	KILOMETER POST TOTAL PROJECT	SHEET NO.	TOTAL SHEETS
04	SF	80	13.2/13.9	510	1204

REGISTERED ENGINEER - CIVIL
12-6-04
PLANS APPROVAL DATE

REGISTERED PROFESSIONAL ENGINEER Alex E. Sanjines No. C 051153 Exp. 9/30/07 CIVIL STATE OF CALIFORNIA

The State of California or its officers or agents shall not be responsible for the accuracy or completeness of electronic copies of this plan sheet.

T.Y. LIN / MOFFATT & NICHOL
825 BATTERY STREET
SAN FRANCISCO, CA 94111

5 Caltrans Metric

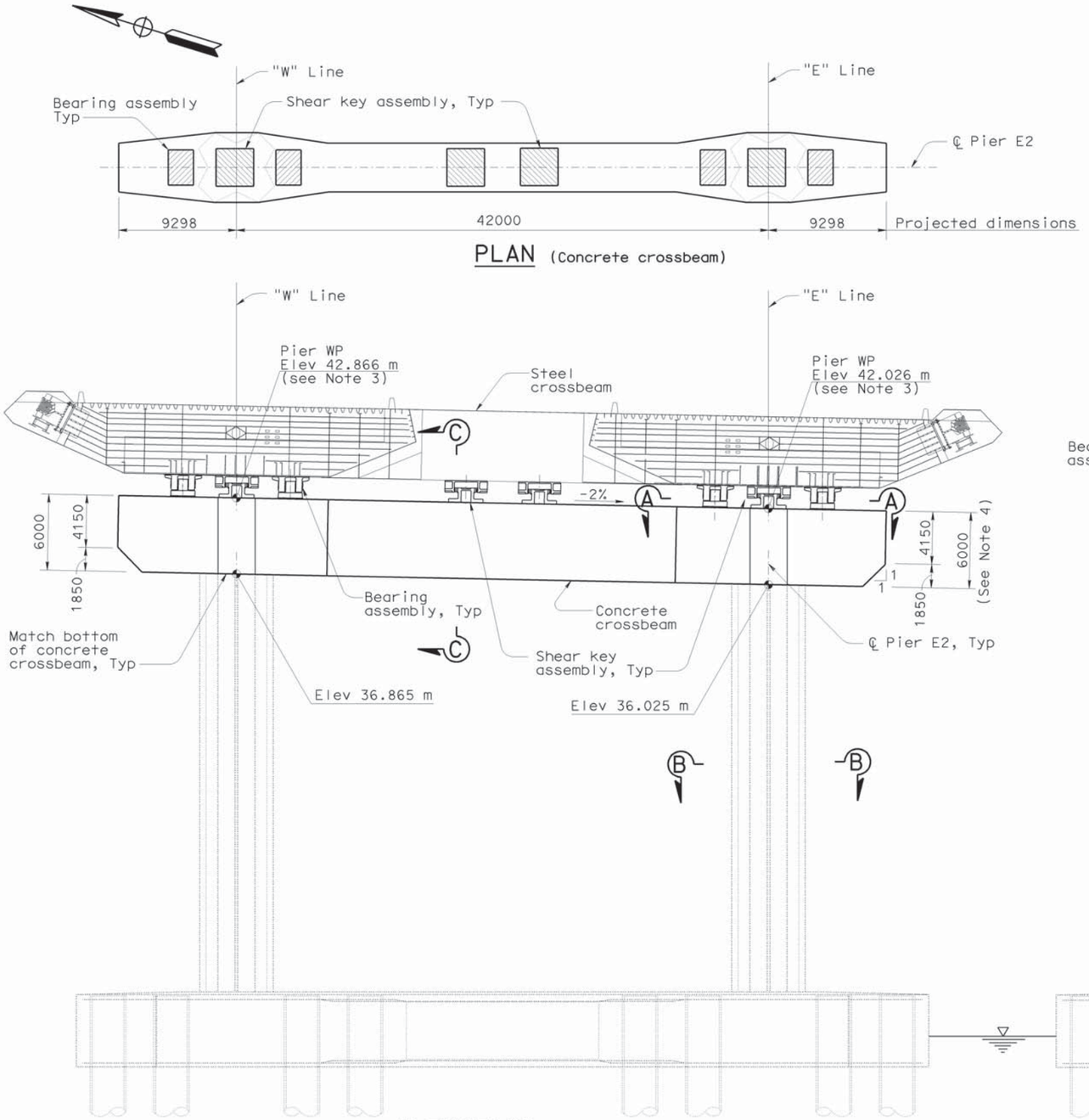

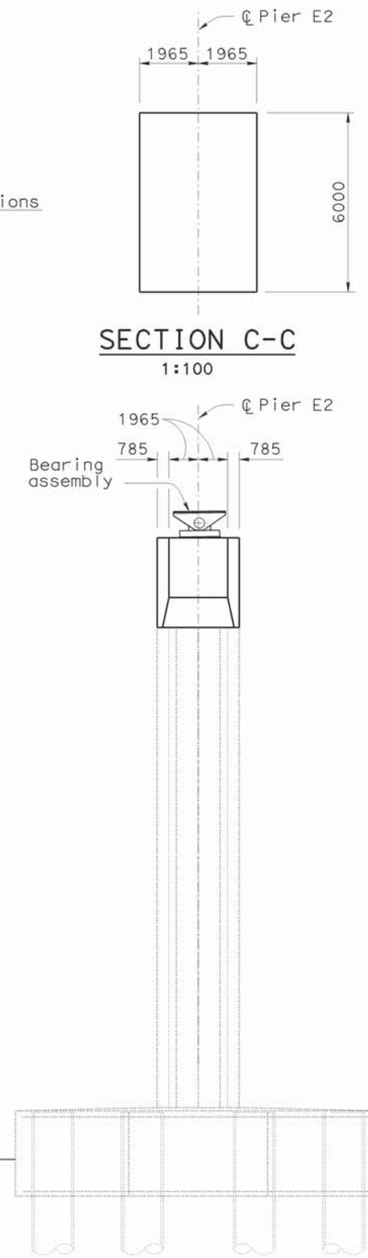

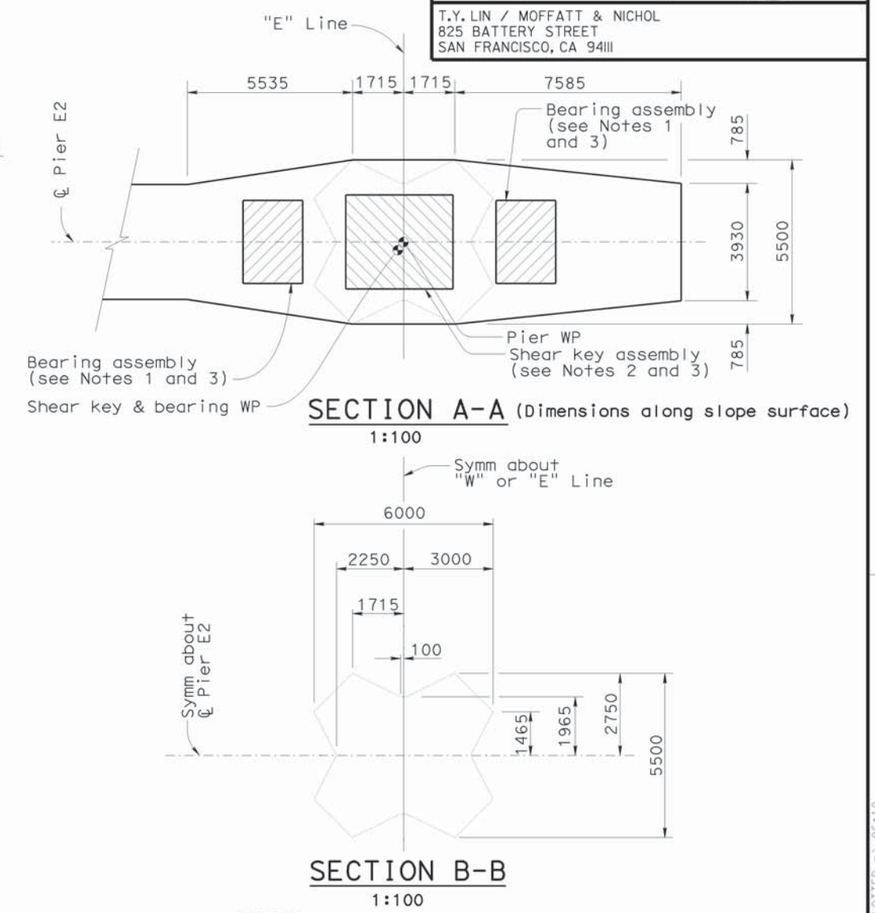

NOTES:

1. For pier E2 bearing details, see "Pier E2 Bearing Details" sheets.
2. For pier E2 shear key details, see "Pier E2 Shear Key Details" sheets.
3. For pier E2 bearing and shear key location, see "Pier E2 Bearing and Shear Key Layout" sheet.
4. Dimensions are normal to the 2% crossbeam slope.
5. For "Pier E2 Details" sheets, the Contractor shall verify all controlling field dimensions before ordering or fabricating any material.

5 **REVISED PER ADDENDUM NO. 5 DATED DECEMBER 21, 2005**

ALL DIMENSIONS ARE IN MILLIMETERS UNLESS OTHERWISE SHOWN

100 % PS&E

USERNAME => friehard DATE PLOTTED => 15-DEC-2005 TIME PLOTTED => 06:10

R. Valizadeh/V.Toan/Y.L./W.L./F.C.
DESIGN OVERSIGHT
SIGN OFF DATE 12/07/05

	BY	CHECKED
DESIGN	A. Sanjines	J. Chan
DETAILS	R. Xu	J. Chan
QUANTITIES	R. Xu	C. Bernardo

PREPARED FOR THE STATE OF CALIFORNIA DEPARTMENT OF TRANSPORTATION

R. Manzanarez
PROJECT ENGINEER

BRIDGE NO. 34-0006L/R
KILOMETER POST 13.2/13.9

SAN FRANCISCO OAKLAND BAY BRIDGE
EAST SPAN SEISMIC SAFETY PROJECT
SELF-ANCHORED SUSPENSION BRIDGE
(SUPERSTRUCTURE & TOWER)

PIER E2 DETAILS NO.1

Rev. Dates 5-18-98

ORIGINAL SCALE IN MILLIMETERS FOR REDUCED PLANS 0 10 20 30 40 50 60 70 80 90 100

CU 04
EA 0120F1

DISREGARD PRINTS BEARING EARLIER REVISION DATES

REVISION DATES (PRELIMINARY STAGE ONLY) 01/15/99 05/15/99 08/02/99 05/24/01 04/08/02 07/24/02 12/24/02 12/07/05

SHEET 93 OF

FILE => aepir01e.add

Caltrans now has a web site! To get to the web site, go to: http://www.dot.ca.gov

Caltrans Metric

DIST.	COUNTY	ROUTE	KILOMETER POST TOTAL PROJECT	SHEET NO.	TOTAL SHEETS
04	SF	80	13.2/13.9	511R1	1204

REGISTERED ENGINEER - CIVIL

12-6-04
PLANS APPROVAL DATE

REGISTERED PROFESSIONAL ENGINEER Alex E. Sanjines No. C 051153 Exp. 9/30/07 CIVIL STATE OF CALIFORNIA

The State of California or its officers or agents shall not be responsible for the accuracy or completeness of electronic copies of this plan sheet.

T.Y. LIN / MOFFATT & NICHOL
825 BATTERY STREET
SAN FRANCISCO, CA 94111

Caltrans now has a web site! To get to the web site, go to: http://www.dot.ca.gov

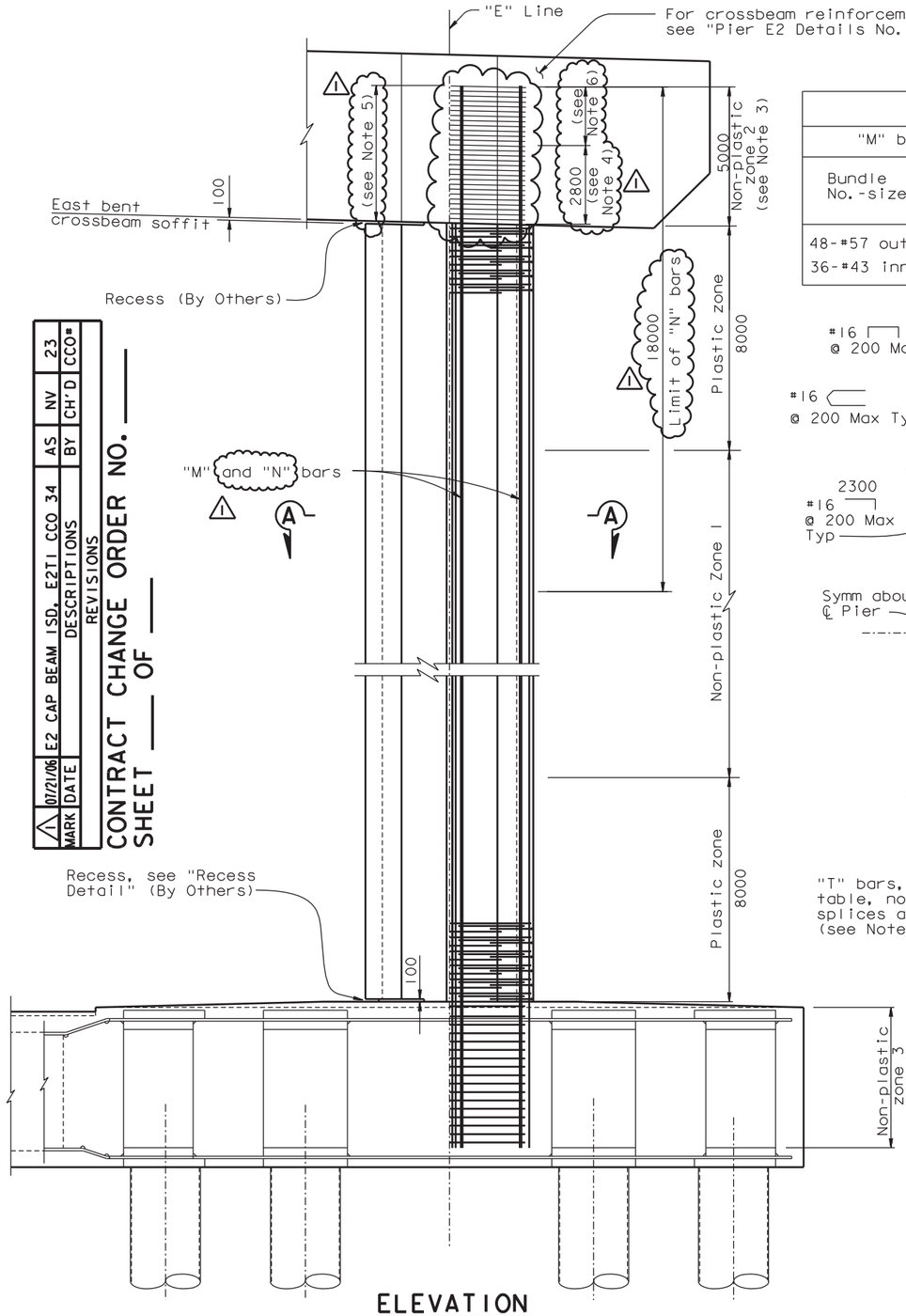

ELEVATION
1:100

Pier reinforcement (see Note 1)															
"M" bars		"N" bars		"T" and "L" bars				Continuous welded hoop							
Bundle No.-sizes	Total per pier	No.-size	Total per pier	Plastic zone		Non-plastic zone 1		Plastic zone		Non-plastic zone 1		Non-plastic zone 2		Non-plastic zone 3	
				Size	spacing	Size	spacing	No.-size	Spacing	No.-size	Spacing	No.-size	Spacing	No.-size	Spacing
48-#57 outer 36-#43 inner	192 144	#43	40	#22	100	#22	100	2-#25	100	#25	100	#25	900 Max	2-#25	150

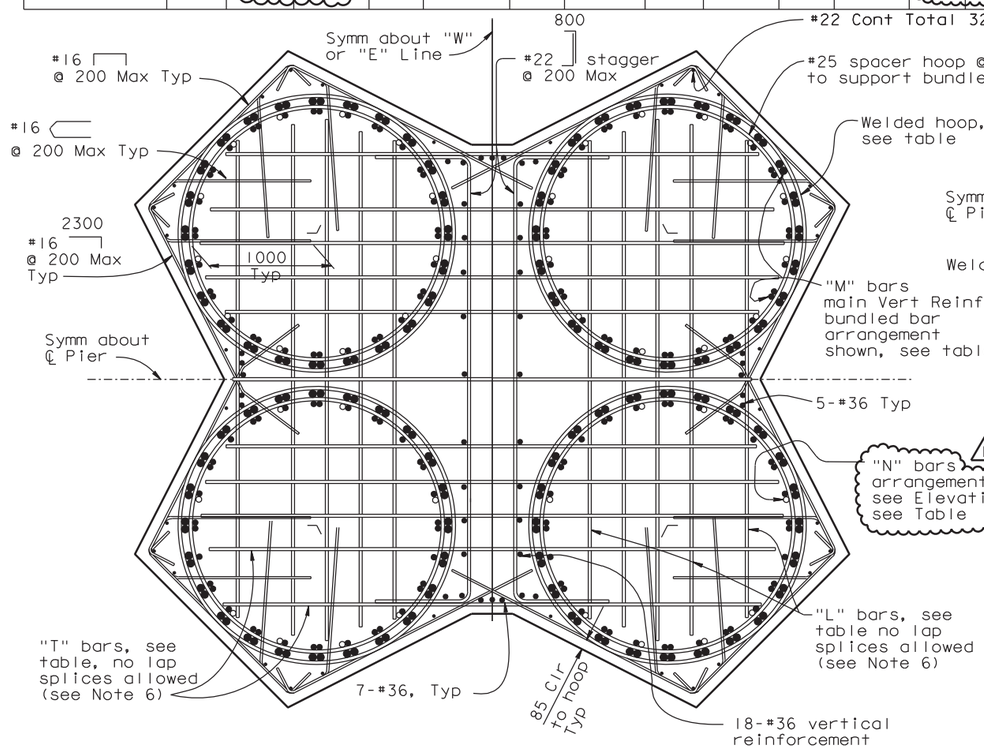

SECTION B-B
1:25

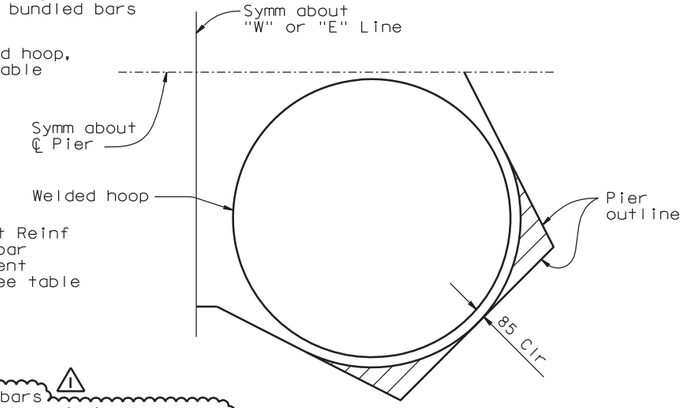

RECESS DETAIL
1:25

NOTES:

1. Reinforcement is for information only, and by Others.
2. Main vertical reinforcement and hoop reinforcement are "Ultimate" butt splices.
3. Contractor shall remove the corrosion protection from all reinforcing and shall roughen the existing Pier E2 concrete surface prior to pouring the concrete crossbeam.
4. Contractor shall remove existing continuous welded hoops down to soffit. Replace with continuous welded hoops spaced at 175 mm placed at 2% slope up to 2800 mm from soffit.
5. Refer to "Pier E2 Details No.10" sheet for main vertical reinforcement cutoff allowance.
6. Contractor shall remove existing continuous welded hoops and replace with #36 ☐ @ 175 mm placed at 2% slope. See Section F-F on "Pier E2 Detail No.4" sheet.

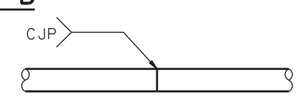

BUTT WELDED CONTINUOUS HOOP
NTS

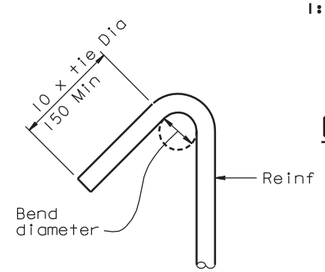

135° SEISMIC HOOK
No scale

LEGEND:

100 Recess

ALL DIMENSIONS ARE IN MILLIMETERS UNLESS OTHERWISE SHOWN

MARK	DATE	DESCRIPTIONS	BY	CH'D	CCO#
1	07/21/06	E2 CAP BEAM 1SD, E2T1 CCO 34	AS	NV	23

REVISIONS

CONTRACT CHANGE ORDER NO. ___
SHEET ___ OF ___

100% PS&E

DATE PLOTTED => 21 DEC 2007 TIME PLOTTED => 10:17:40

USERNAME => ptom

SAN FRANCISCO OAKLAND BAY BRIDGE
EAST SPAN SEISMIC SAFETY PROJECT
SELF-ANCHORED SUSPENSION BRIDGE
(SUPERSTRUCTURE & TOWER)

PIER E2 DETAILS NO.2

R. Valizadeh/V. Toan/Y.L./W.L./F.C.
DESIGN OVERSIGHT
SIGN OFF DATE 07/21/06

	BY	CHECKED
DESIGN	A. Sanjines	J. Chan
DETAILS	R. Xu	J. Chan
QUANTITIES	R. Xu	C. Bernardo

PREPARED FOR THE STATE OF CALIFORNIA DEPARTMENT OF TRANSPORTATION

R. Manzanarez
PROJECT ENGINEER

BRIDGE NO. 34-0006L/R
KILOMETER POST 13.2/13.9

CU 04
EA 0120F1

DISREGARD PRINTS BEARING EARLIER REVISION DATES

REVISION DATES (PRELIMINARY STAGE ONLY): 08/02/99 05/31/01 04/08/02 07/01/02 12/19/02 05/16/03

SHEET 94R1 OF

Rev. Date: 5-18-98

ORIGINAL SCALE IN MILLIMETERS FOR REDUCED PLANS 0 10 20 30 40 50 60 70 80 90 100

FILE => I:\bb\04-012001\sas\contract plans and cco\cco\cco#23\update 12-21-07\dgn\aepir02e-r1.dgn

DIST.	COUNTY	ROUTE	KILOMETER POST TOTAL PROJECT	SHEET NO.	TOTAL SHEETS
04	SF	80	13.2/13.9	518	1204

REGISTERED ENGINEER - CIVIL

12-6-04
PLANS APPROVAL DATE

REGISTERED PROFESSIONAL ENGINEER Alex E. Sanjines No. C 051153 Exp. 9/30/07 CIVIL STATE OF CALIFORNIA

The State of California or its officers or agents shall not be responsible for the accuracy or completeness of electronic copies of this plan sheet.

T.Y. LIN / MOFFATT & NICHOL
825 BATTERY STREET
SAN FRANCISCO, CA 94111

Caltrans now has a web site! To get to the web site, go to: http://www.dot.ca.gov

5

Caltrans Metric

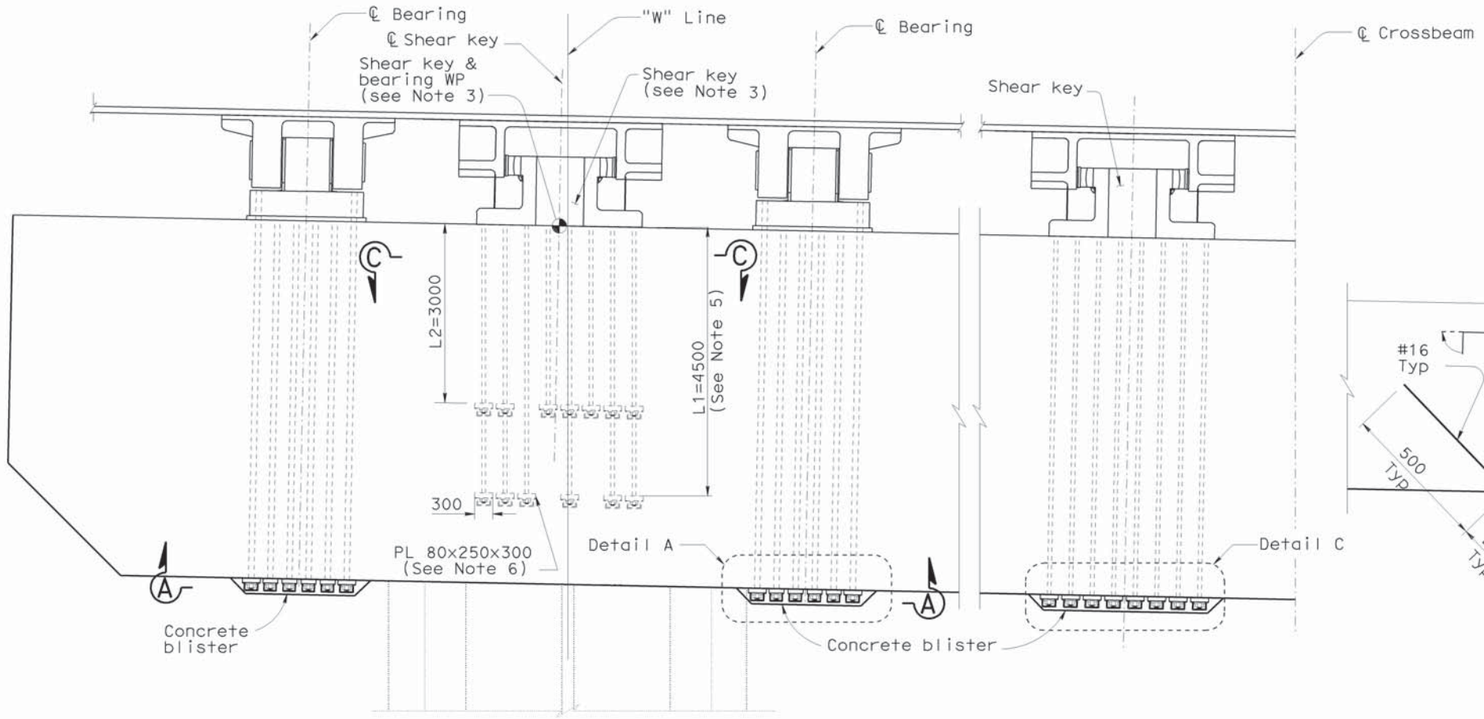

ELEVATION
1:50

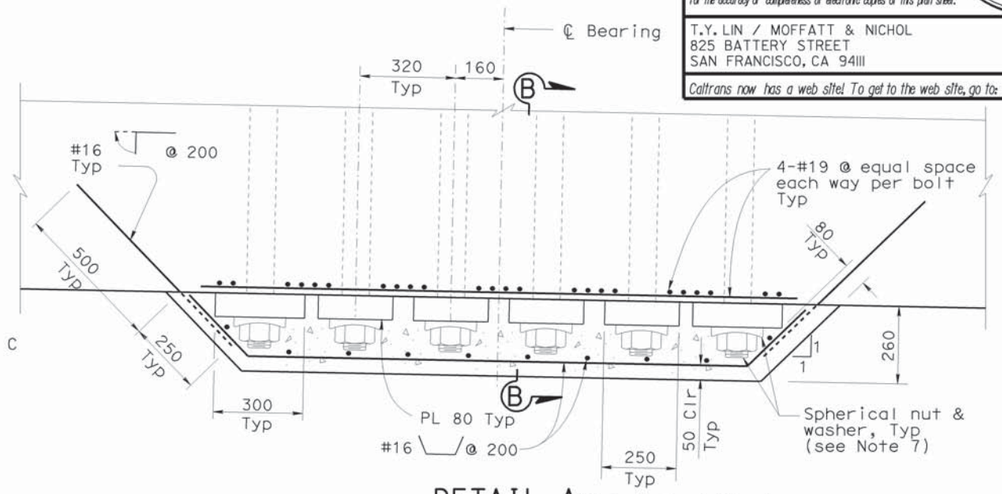

DETAIL A (Detail C similar)
1:10

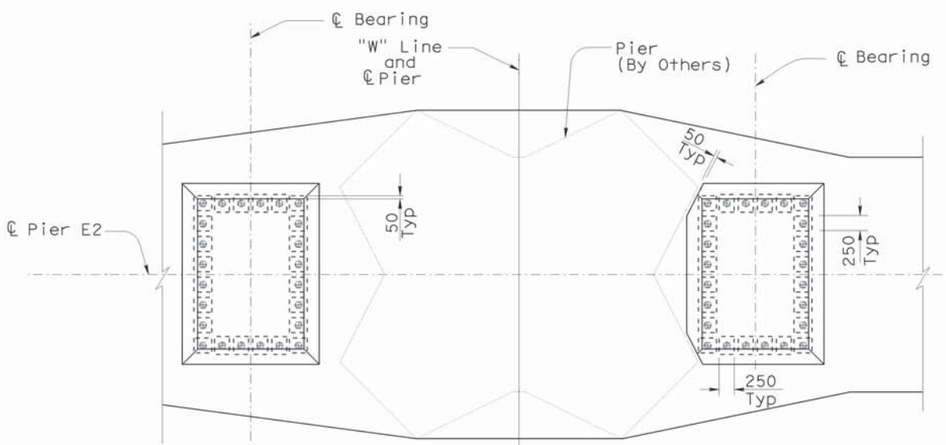

SECTION A-A
1:50

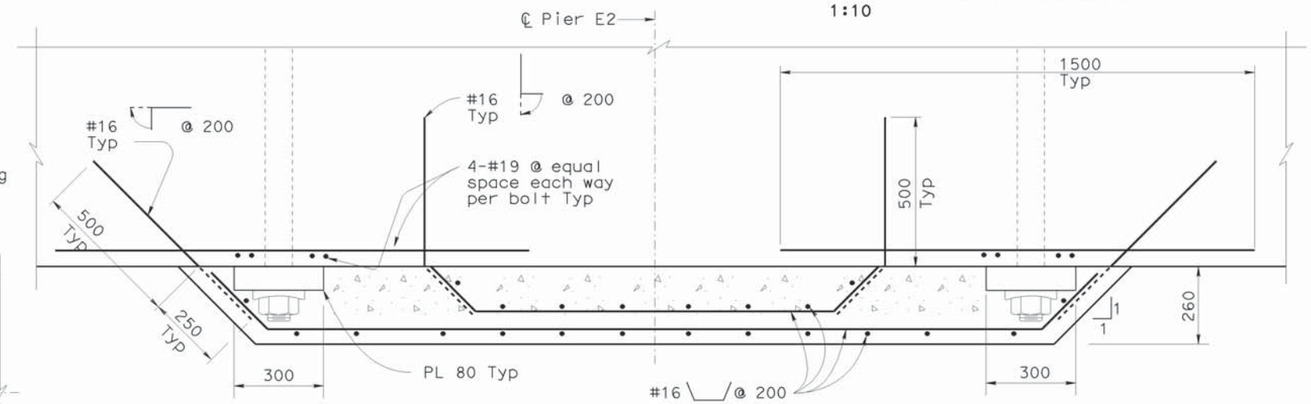

SECTION B-B
1:10

NOTES:

1. For pier E2 bearing hold down assembly, see "Pier E2 Bearing Details" sheets.
2. Local confining spiral reinforcement for bearing HS bolts shall be provided by hardware suppliers, not shown for clarity.
3. For pier E2 bearing and shear key location, see "Pier E2 Bearing and Shear Key Layout" sheet.
4. For Section C-C, see "Pier E2 Details No.10" sheet.
5. For shear key anchor bolt length layout, see "Pier E2 Details No.10" sheet.
6. Rotate shear key anchor plates as necessary to clear column reinforcement.
7. The spherical nut and washer shall be able to accomodate a maximum roation of 3 degress in any direction.
8. End cap shall be provided to prevent concrete from bonding to spherical nut and washer. Anchor bolts shall be able to pivot freely to accommodate construction tolerance.

100 % PS&E

5 **REVISED PER ADDENDUM NO. 5 DATED DECEMBER 21, 2005**

ALL DIMENSIONS ARE IN MILLIMETERS UNLESS OTHERWISE SHOWN

SAN FRANCISCO OAKLAND BAY BRIDGE
EAST SPAN SEISMIC SAFETY PROJECT
SELF-ANCHORED SUSPENSION BRIDGE
(SUPERSTRUCTURE & TOWER)

PIER E2 DETAILS NO.9

R. Valizadeh/V.Toan/Y.L./W.L./F.C.
DESIGN OVERSIGHT
SIGN OFF DATE 12/07/05

	BY	CHECKED
DESIGN	A. Sanjines	J. Chan
DETAILS	R. Xu	J. Chan
QUANTITIES	R. Xu	C. Bernardo

PREPARED FOR THE STATE OF CALIFORNIA DEPARTMENT OF TRANSPORTATION

R. Manzanarez
PROJECT ENGINEER

BRIDGE NO. 34-0006L/R
KILOMETER POST 13.2/13.9

CU 04
EA 0120F1

DISREGARD PRINTS BEARING EARLIER REVISION DATES

REVISION DATES (PRELIMINARY STAGE ONLY) 05/31/01 04/08/02 07/09/02 12/19/02 12/07/05

SHEET 101 OF

Rev. Dates 5-18-98

ORIGINAL SCALE IN MILLIMETERS FOR REDUCED PLANS 0 10 20 30 40 50 60 70 80 90 100

FILE => aepir07e.add

USERNAME => trlenard DATE PLOTTED => 15-DEC-2005 TIME PLOTTED => 06:10

DIST.	COUNTY	ROUTE	KILOMETER POST TOTAL PROJECT	SHEET NO.	TOTAL SHEETS
04	SF	80	13.2/13.9	519R1	1204

REGISTERED ENGINEER - CIVIL

12-6-04
PLANS APPROVAL DATE

REGISTERED PROFESSIONAL ENGINEER Alex E. Sanjines No. C 051153 Exp. 9/30/07 CIVIL STATE OF CALIFORNIA

The State of California or its officers or agents shall not be responsible for the accuracy or completeness of electronic copies of this plan sheet.

T.Y. LIN / MOFFATT & NICHOL
825 BATTERY STREET
SAN FRANCISCO, CA 94111

Caltrans now has a web site! To get to the web site, go to: http://www.dot.ca.gov

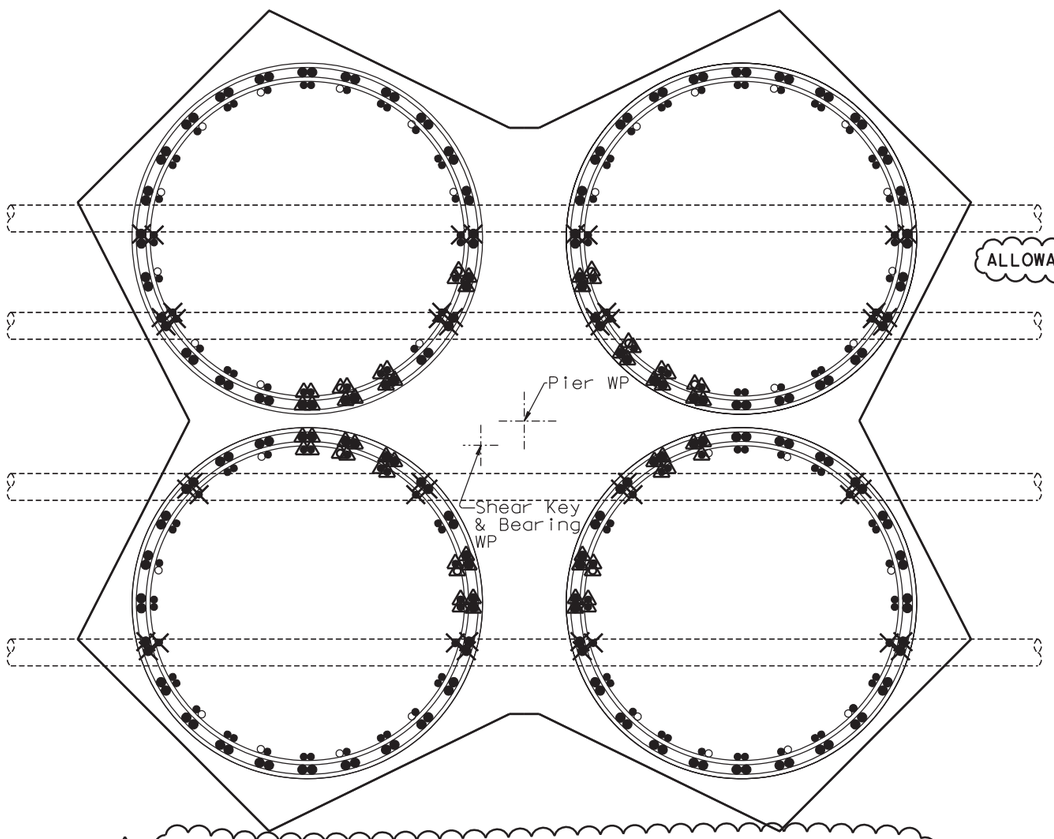

CUTOFF ALLOWANCE FOR COLUMN REINFORCEMENT

NTS

(Allowance shown is theoretical and is for information only. Not for construction). (see Note 2 thru 4)

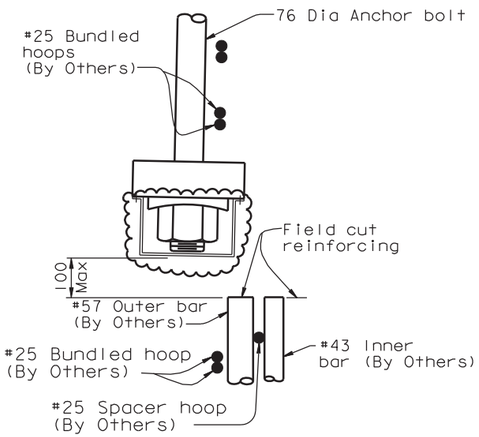

ALLOWANCE FOR ANCHOR BOLT AND ANCHOR PLATE

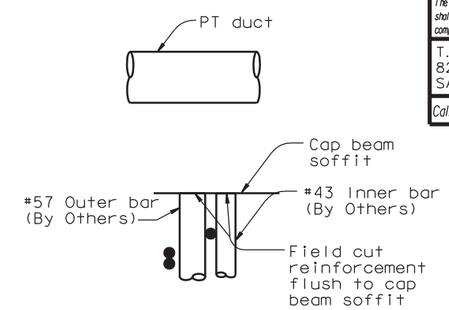

ALLOWANCE FOR PT DUCT

FIELD CUT DETAIL

NTS

(see Notes 2 thru 4)

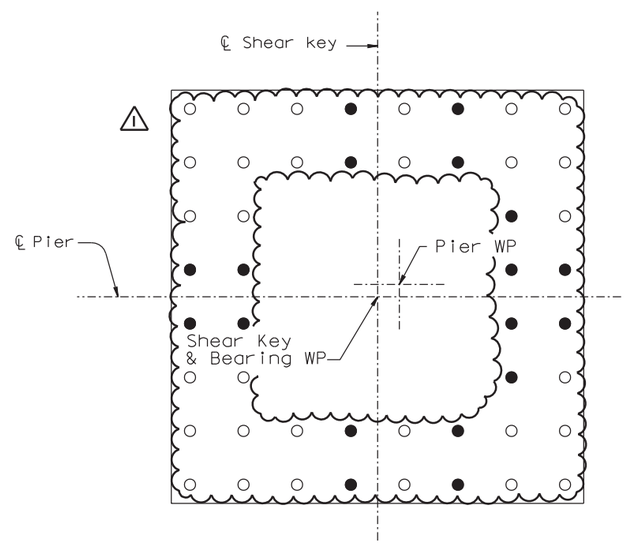

SECTION C-C

1:20

(Anchor bolt length layout)

LEGEND:

- o Anchor bolts length = L1
- • Anchor bolts length = L2
- × Indicates #43 or #57 column reinforcement may be field cut below the ducts. See "Allowance for PT duct".
- △ Indicates #43 or #57 column reinforcement may be field cut below the anchor bolt or anchor PL. See "Allowance for anchor bolt and anchor plate".

NOTES:

1. Local confining spiral reinforcement for bearing HS bolts shall be provided by hardware suppliers; not shown for clarity.
2. Rotate anchor plates as necessary to clear column reinforcement.
3. Contractor may field cut existing column reinforcement marked with X or △ to clear PT ducts and shear key anchor bolt/anchor plate. See Field Cut Detail.
4. Prior to cutting any column reinforcement, the Contractor is required to submit locations and number of bars to be field cut for Engineer's review and approval.

MARK	DATE	DESCRIPTIONS	BY	CH'D	CCO#
1	07/21/06	E2 CAP BEAM ISD	AS	NV	23

REVISIONS

CONTRACT CHANGE ORDER NO. _____
SHEET ____ OF ____

ALL DIMENSIONS ARE IN MILLIMETERS UNLESS OTHERWISE SHOWN

R. Valizadeh/V. Toan/Y.L./W.L./F.C.
DESIGN OVERSIGHT
Roya Valizadeh / Vong P. Toan / Y. Liu
SIGN OFF DATE 07/21/06

DESIGN	BY A. Sanjines	CHECKED J. Chan	
DETAILS	BY R. Xu	CHECKED J. Chan	
QUANTITIES	BY C. Bernardo	CHECKED B. Mason	

PREPARED FOR THE STATE OF CALIFORNIA DEPARTMENT OF TRANSPORTATION

R. Manzanarez
PROJECT ENGINEER

BRIDGE NO. 34-0006L/R
KILOMETER POST 13.2/13.9

SAN FRANCISCO OAKLAND BAY BRIDGE
EAST SPAN SEISMIC SAFETY PROJECT
SELF-ANCHORED SUSPENSION BRIDGE
(SUPERSTRUCTURE & TOWER)

PIER E2 DETAILS NO. 10

Rev. Date: 5-18-98

ORIGINAL SCALE IN MILLIMETERS FOR REDUCED PLANS 0 10 20 30 40 50 60 70 80 90 100

CU 04
EA 0120F1

DISREGARD PRINTS BEARING EARLIER REVISION DATES

REVISION DATES (PRELIMINARY STAGE ONLY) 05/31/01 04/08/02 07/09/02 12/19/02 05/16/03 12/07/05

SHEET 102R1 OF

FILE => I:\bb\04-01200I\sas\contract plans and cco\cco\cco#23\update 12-21-07\dgn\aepir08-r1.dgn

USERNAME => ptom DATE PLOTTED => 21 DEC 2007 TIME PLOTTED => 10:21:32

100 % PS&E

DIST.	COUNTY	ROUTE	KILOMETER POST TOTAL PROJECT	SHEET NO.	TOTAL SHEETS
04	SF	80	13.2/13.9	520R1	1204

Caltrans Metric

REGISTERED ENGINEER - CIVIL

12-6-04
PLANS APPROVAL DATE

REGISTERED PROFESSIONAL ENGINEER John Sun No. C 54648 Exp. 12/31/05 CIVIL STATE OF CALIFORNIA

The State of California or its officers or agents shall not be responsible for the accuracy or completeness of electronic copies of this plan sheet.

T.Y. LIN / MOFFATT & NICHOL
825 BATTERY STREET
SAN FRANCISCO, CA 94111

Caltrans now has a web site! To get to the web site, go to: http://www.dot.ca.gov

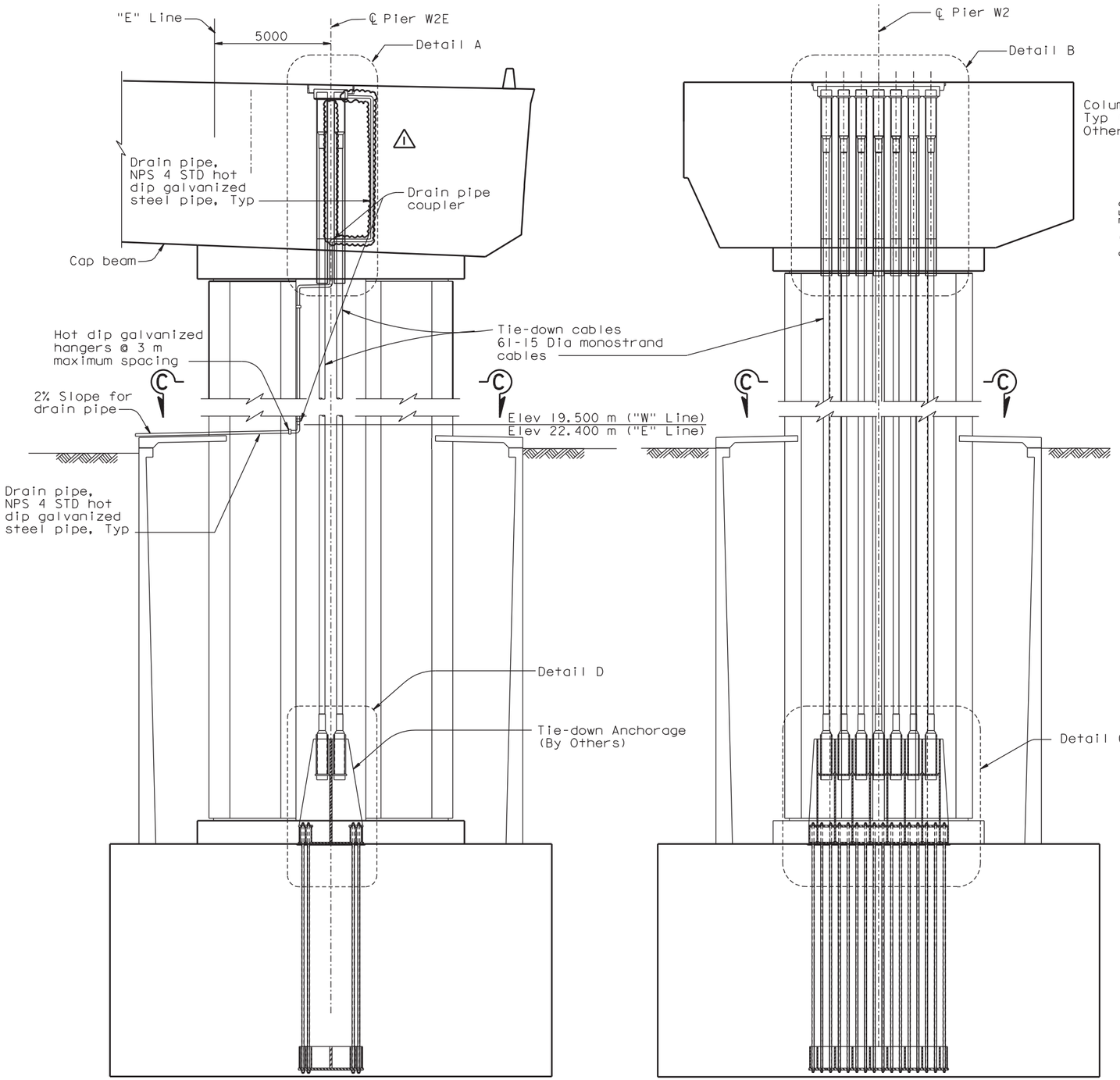

SECTION A-A
1:100

SECTION B-B
1:100

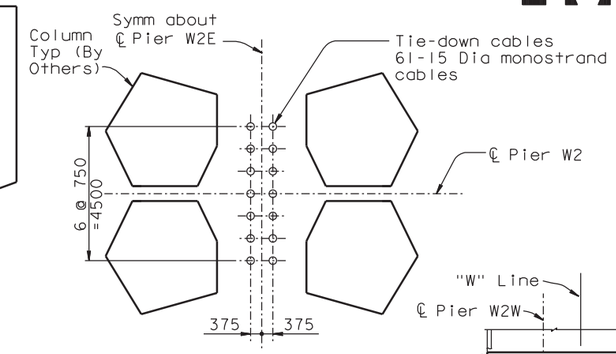

SECTION C-C
1:100

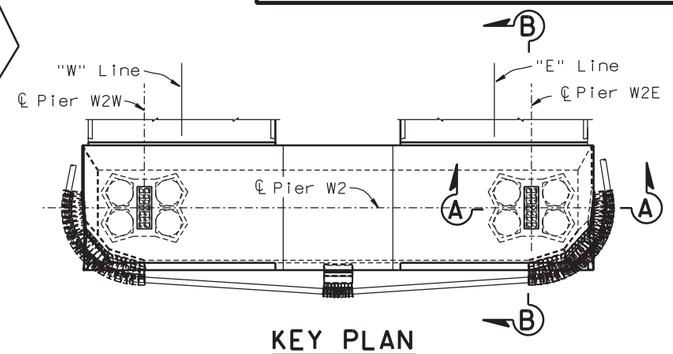

KEY PLAN
1:400

MARK	DATE	DESCRIPTIONS	BY	CH'D	CCO#
1	07/21/06	W2 CAP BEAM ISD	JD	NV	23

REVISIONS

FOR REVISIONS ONLY

REGISTERED PROFESSIONAL ENGINEER Jaimes P. Duxbury No. C 64677 Exp. 06/30/07 CIVIL STATE OF CALIFORNIA

CONTRACT CHANGE ORDER NO. _____
SHEET ____ OF ____

NOTES:

1. Tie-down cables shall be of ASTM A416 Grade 270 (fu=1860 MPa) seven wire, low relaxation monostrands, unless specified otherwise.
2. For Details A and B, see "Cable Tie-Down Details No.3" sheet.
3. For Details C and D, see "Cable Tie-Down Details No.4" sheet.
4. For additional prestressing details, see "Prestressing Notes" sheet.
5. For general stressing sequence, see "Pier W2 Construction Sequence" sheet.
6. Jacking force in the tie-down cables shall be 8570 kN typical.
7. For tie-down cable details, see "Cable Tie-Down Details No.2" sheet.
8. For "Cable Tie-Down Details" sheets, the Contractor shall verify all controlling field dimensions before ordering or fabricating any material.

100% PS&E

ALL DIMENSIONS ARE IN MILLIMETERS UNLESS OTHERWISE SHOWN

R. Valizadeh/V. Toan/Y.L./W.L./F.C.
DESIGN OVERSIGHT
Reza Valizadeh / Vong Toan / Y. Liu
SIGN OFF DATE 07/21/06

DESIGN	BY J. Sun	CHECKED J. Straski	
DETAILS	BY S. Shi	CHECKED J. Straski	
QUANTITIES	BY J. Duxbury	CHECKED S. Shi	

PREPARED FOR THE STATE OF CALIFORNIA DEPARTMENT OF TRANSPORTATION

R. Manzanarez
PROJECT ENGINEER

BRIDGE NO. 34-0006L/R
KILOMETER POST 13.2/13.9

SAN FRANCISCO OAKLAND BAY BRIDGE
EAST SPAN SEISMIC SAFETY PROJECT
SELF-ANCHORED SUSPENSION BRIDGE
(SUPERSTRUCTURE & TOWER)

CABLE TIE-DOWN DETAILS NO. 1

Rev. Date: 5-18-98

ORIGINAL SCALE IN MILLIMETERS FOR REDUCED PLANS 0 10 20 30 40 50 60 70 80 90 100

CU 04
EA 0120F1

DISREGARD PRINTS BEARING EARLIER REVISION DATES

REVISION DATES (PRELIMINARY STAGE ONLY) 05/15/99 08/02/99 05/24/01 04/08/02 07/04/02 12/19/02

SHEET 103R1 OF

FILE => I:\bb\04-0120I\sas\contract plans and cco\cco\cco#23\deptd01.dgn

USERNAME => vignatovs DATE PLOTTED => 10 MAY 2007 TIME PLOTTED => 11:30:15

DIST.	COUNTY	ROUTE	KILOMETER POST TOTAL PROJECT	SHEET NO.	TOTAL SHEETS
04	SF	80	13.2/13.9	813S6	1204

Caltrans Metric

REGISTERED ENGINEER - CIVIL

07-06-12
PLANS APPROVAL DATE

REGISTERED PROFESSIONAL ENGINEER Marwan N. Nader No. C 054426 Exp. 12/31/13 CIVIL STATE OF CALIFORNIA

The State of California or its officers or agents shall not be responsible for the accuracy or completeness of electronic copies of this plan sheet.

T.Y. LIN / MOFFATT & NICHOL
825 BATTERY STREET
SAN FRANCISCO, CA 94111

Caltrans now has a web site! To get to the web site, go to: http://www.dot.ca.gov

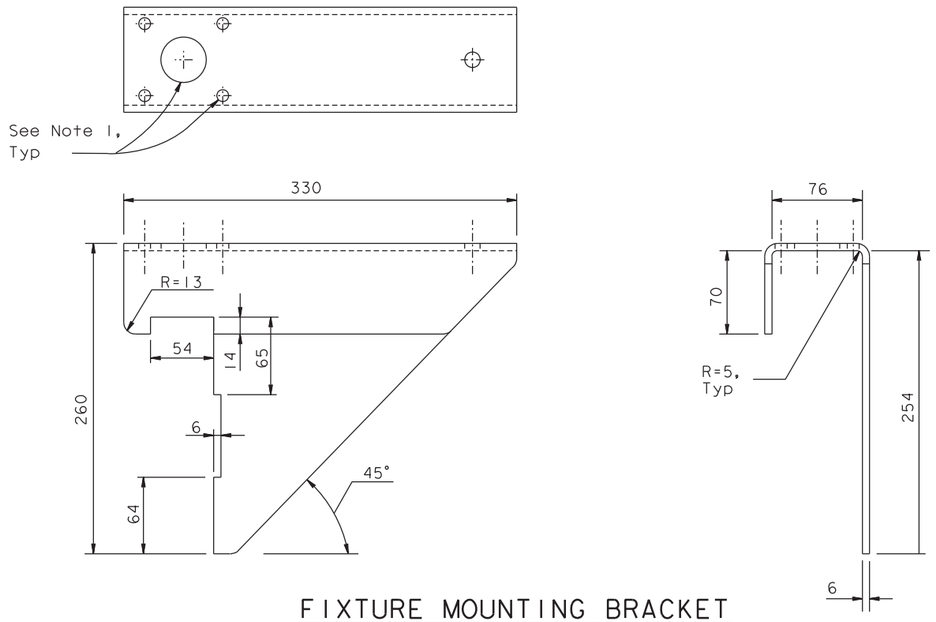

FIXTURE MOUNTING BRACKET
1:2.5

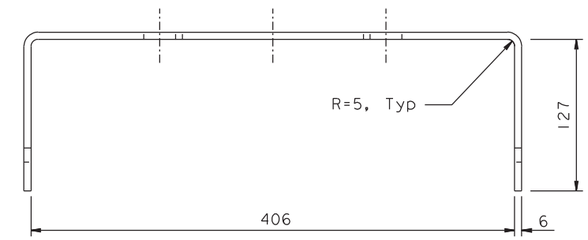

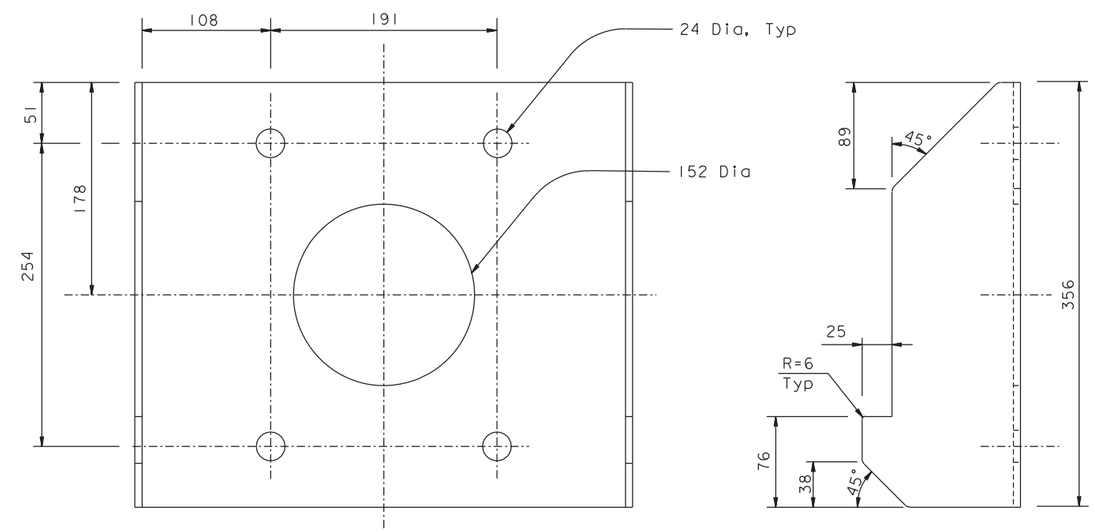

U-CHANNEL FOR MAD
1:2.5

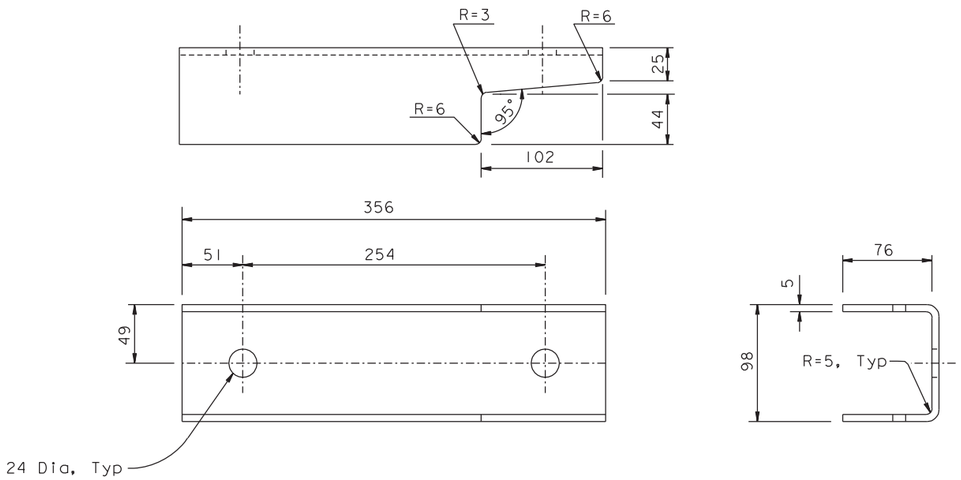

U-CHANNEL FOR MSR
1:2.5

NOTES:

1. The Contractor shall provide holes for light assembly per manufacturer's recommendations, subject to review and approval of the Engineer.
2. Light assembly details and dimensions may be adjusted for fabrication to suit lighting manufacturer's means and methods. Adjusted dimensions shall be subject to review and approval of the Engineer.

CONTRACT CHANGE ORDER NO. ____
SHEET ___ OF ___

REQUESTS FOR INFORMATION NOT ADDRESSED IN THIS CCO REMAIN IN FORCE

ALL DIMENSIONS ARE IN MILLIMETERS UNLESS OTHERWISE SHOWN

R. Valizadeh/V. Toan/Y.L./W.L./F.C.
DESIGN OVERSIGHT
SIGN OFF DATE 07/06/12

MARK	DATE	DESCRIPTIONS	BY	CH'D	CCO#
0	07/06/12	CABLE ELECTRICAL	DT	MN	72S1

REVISIONS

	BY	CHECKED
DESIGN	D. Turner	M. Nader
DETAILS	D. Turner	A. Baumberger
QUANTITIES	D. Turner	A. Baumberger

PREPARED FOR THE STATE OF CALIFORNIA DEPARTMENT OF TRANSPORTATION

R. Manzanarez
PROJECT ENGINEER

BRIDGE NO. 34-0006L/R
KILOMETER POST 13.2/13.9

SAN FRANCISCO OAKLAND BAY BRIDGE
EAST SPAN SEISMIC SAFETY PROJECT
SELF-ANCHORED SUSPENSION BRIDGE
(SUPERSTRUCTURE & TOWER)

CABLE HANDROPE DETAILS NO. 2F

Rev. Date: 5-18-98

ORIGINAL SCALE IN MILLIMETERS FOR REDUCED PLANS 0 10 20 30 40 50 60 70 80 90 100

CU 04
EA 0120F1

DISREGARD PRINTS BEARING EARLIER REVISION DATES 07/06/12

REVISION DATES (PRELIMINARY STAGE ONLY)

SHEET 396S6 OF

FILE => I:\bb\04-012001\sas\contract plans and cco\cco\cco#72s1\3-revision 07-06-12\dgn\agshr08f.dgn

USERNAME => DWinrow DATE PLOTTED => 06 JUL 2012 TIME PLOTTED: 03:06

DIST.	COUNTY	ROUTE	KILOMETER POST TOTAL PROJECT	SHEET NO.	TOTAL SHEETS
04	SF	80	13.2/13.9	882ARI	1204

Caltrans Metric

REGISTERED ENGINEER - CIVIL

12-6-04
PLANS APPROVAL DATE

REGISTERED PROFESSIONAL ENGINEER Marwan N. Nader No. C 054426 Exp. 12/31/09 CIVIL STATE OF CALIFORNIA

The State of California or its officers or agents shall not be responsible for the accuracy or completeness of electronic copies of this plan sheet.

T.Y. LIN / MOFFATT & NICHOL
825 BATTERY STREET
SAN FRANCISCO, CA 94111

Caltrans now has a web site! To get to the web site, go to: http://www.dot.ca.gov

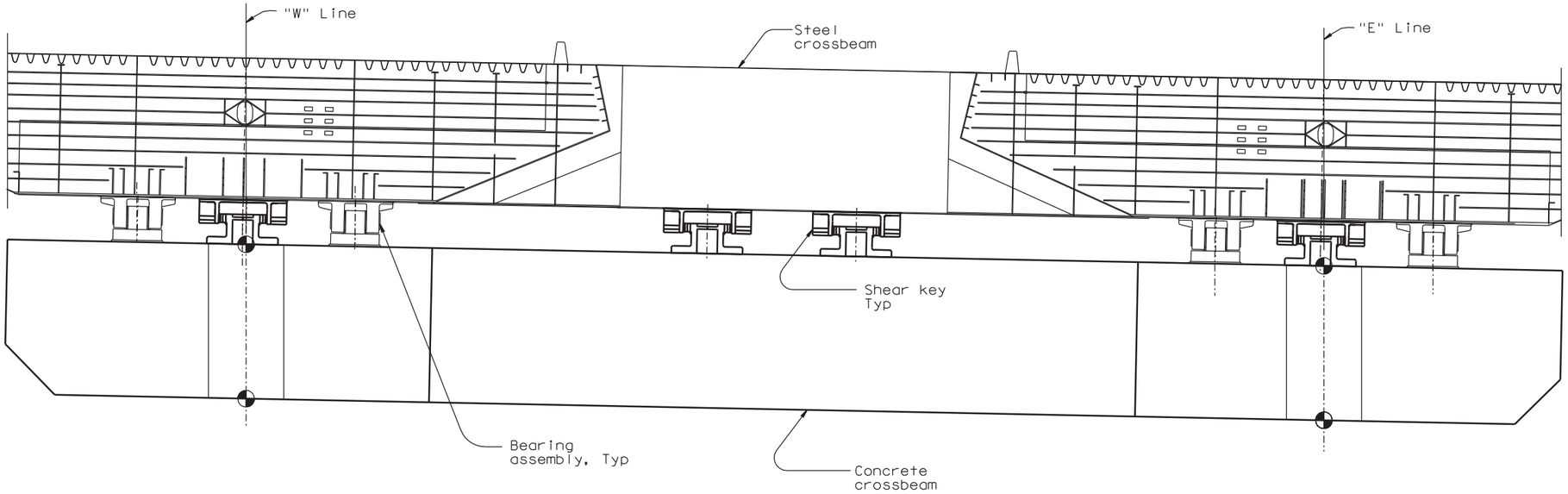

ELEVATION (Looking East)

REQUESTS FOR INFORMATION NOT ADDRESSED IN THIS CCO REMAIN IN FORCE

MARK	DATE	DESCRIPTIONS	BY	CH'D	CCO#
1	09/26/08	E2 CROSS BEAM	MN	NV	71

REVISIONS

CONTRACT CHANGE ORDER NO. ____
SHEET ___ OF ___

BEARING ASSEMBLY TABLE

Location	Bearing Typ	Number of bearing units per location	Design Load (kN per bearing)							Design rotation (radians)						Design Displacement (mm)					
			Service			Ultimate				Service			Ultimate			Service			Ultimate		
			Compression	Uplift	Long or Trans	Load Condition	Compression	Uplift	Long or Trans	Trans Axis	Long Axis	Vert Axis	Trans Axis	Long Axis	Vert Axis	Trans Axis	Long Axis	Vert Axis	Trans Axis	Long Axis	Vert Axis
"W" Line	Spherical Bushing	2	35000	0	0	Shear Key Engaged	86000	32000	0	0.009	0	0	0.130	0.032	0.032	5	5	0	20	20	2**
						Shear Key Failed*	68000	17000	30500												
"E" Line	Spherical Bushing	2	35000 (1)	0	0	Shear Key Engaged	86000	32000	0	0.009	0	0	0.130	0.032	0.032	5	5	0	20	20	2**
						Shear Key Failed*	68000	17000	30500												

Installation Misalignment Tolerances (Per bearing/ Shear Key)	Trans./Long./Vertical	Rotational
	± 2 mm	± 0.5°

* Seismic load factor γ = 1.0 (For shear key engaged load condition, γ = 1.4).
** For uplifting only.

SHEAR KEY ASSEMBLY TABLE

Location	Number of Shear Key Units Per Location	Design Load (kN per shear key)						Design rotation (radians)						Design Displacement (mm)					
		Service			Ultimate			Service			Ultimate			Service			Ultimate		
		Trans	Long	Vert	Trans	Long	Vert	Trans Axis	Long Axis	Vert Axis	Trans Axis	Long Axis	Vert Axis	Trans Axis	Long Axis	Vert Axis	Trans Axis	Long Axis	Vert Axis
"W" Line	1	9000	4500	0	42500	35000	0	0.009	0	0	0.130	0.130	0.130	0	0	10	0	0	20
"E" Line	1	9000	4500	0	42500	35000	0	0.009	0	0	0.130	0.130	0.130	0	0	10	0	0	20
Crossbeam	2	9000	1	0	42500	0	0	0.009	0	0	0.130	0.130	0.130	0	5	10	0	20	20

ALL DIMENSIONS ARE IN MILLIMETERS UNLESS OTHERWISE SHOWN

SAN FRANCISCO OAKLAND BAY BRIDGE
EAST SPAN SEISMIC SAFETY PROJECT
SELF-ANCHORED SUSPENSION BRIDGE
(SUPERSTRUCTURE & TOWER)

PIER E2 BEARING AND SHEAR KEY DESIGN FORCES

R. Valizadeh/V. Toan/Y.L./W.L./F.C.
DESIGN OVERSIGHT
Roya Valizadeh / Vong D. Toan / Y. Liu
SIGN OFF DATE 09/26/08

	BY	CHECKED
DESIGN	M. Nader	L. Rus
DETAILS	N. Vo	J. Leventini
QUANTITIES	N. Vo	J. Leventini

PREPARED FOR THE STATE OF CALIFORNIA DEPARTMENT OF TRANSPORTATION

R. Manzanarez
PROJECT ENGINEER

BRIDGE NO. 34-0006L/R
KILOMETER POST 13.2/13.9

CU 04
EA 0120F1

DISREGARD PRINTS BEARING EARLIER REVISION DATES → 12/07/05

REVISION DATES (PRELIMINARY STAGE ONLY)

SHEET 465ARI OF

Rev. Date: 5-18-98

ORIGINAL SCALE IN MILLIMETERS FOR REDUCED PLANS 0 10 20 30 40 50 60 70 80 90 100

FILE => I:\bb\04-012001\sas\contract plans and cco\cco\in progress\cco#71\original 09-26-08\dgn\aksrd02.dgn

100% PS&E
DATE PLOTTED => 08 OCT 2008 TIME PLOTTED => 15:34:35
USERNAME => ptom

DIST.	COUNTY	ROUTE	KILOMETER POST TOTAL PROJECT	SHEET NO.	TOTAL SHEETS
04	SF	80	13.2/13.9	882R1	1204

REGISTERED ENGINEER - CIVIL

12-6-04
PLANS APPROVAL DATE

REGISTERED PROFESSIONAL ENGINEER Marwan N. Nader No. C 054426 Exp. 12/31/09 CIVIL STATE OF CALIFORNIA

The State of California or its officers or agents shall not be responsible for the accuracy or completeness of electronic copies of this plan sheet.

T.Y. LIN / MOFFATT & NICHOL
825 BATTERY STREET
SAN FRANCISCO, CA 94111

Caltrans now has a web site! To get to the web site, go to: http://www.dot.ca.gov

LEGEND:

CR Center of Rotation

Caltrans Metric

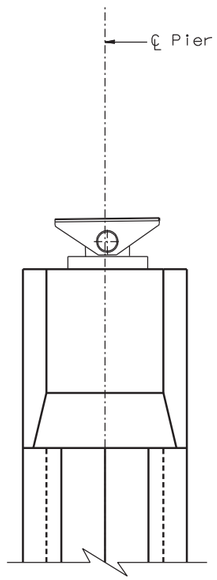

SIDE ELEVATION

1:200
(Looking South)

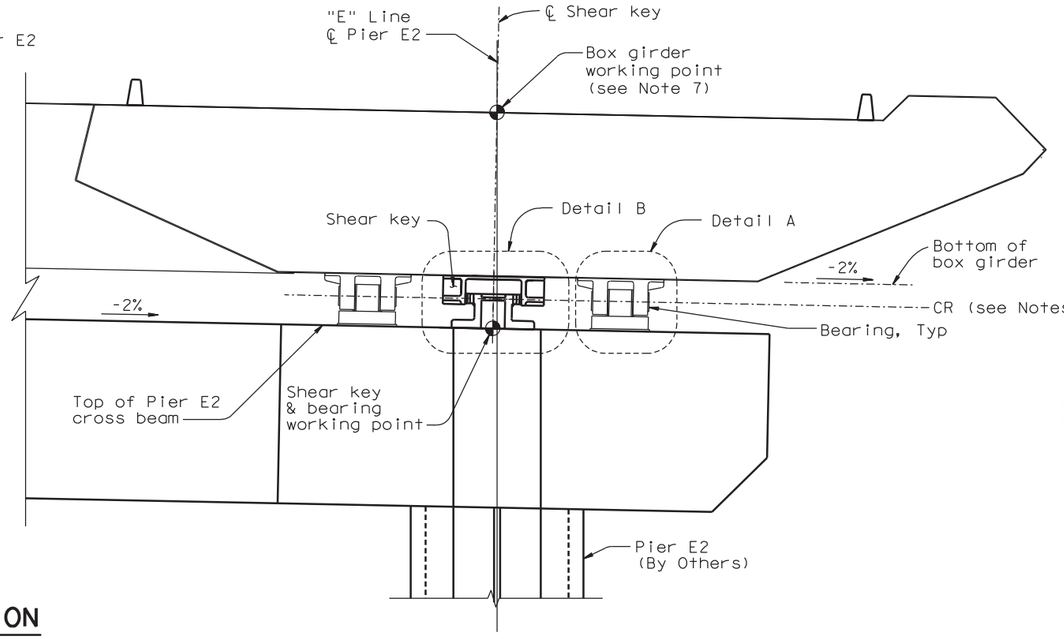

KEY ELEVATION (Looking East)

1:100

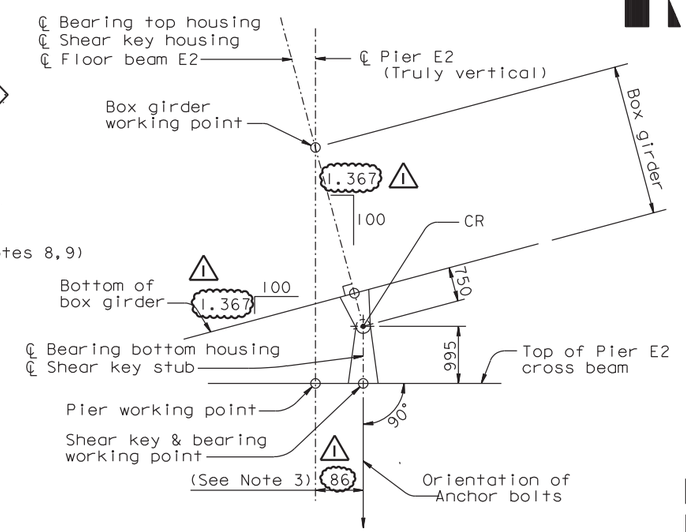

SHEAR KEY AND BEARING LOCATION

NTS
(Looking South)

REQUESTS FOR INFORMATION NOT ADDRESSED IN THIS CCO REMAIN IN FORCE

MARK	DATE	DESCRIPTIONS	BY	CH'D	CCO#
1	09/26/08	E2 CROSS BEAM	MN	NV	71

REVISIONS

CONTRACT CHANGE ORDER NO. ____
SHEET ___ OF ___

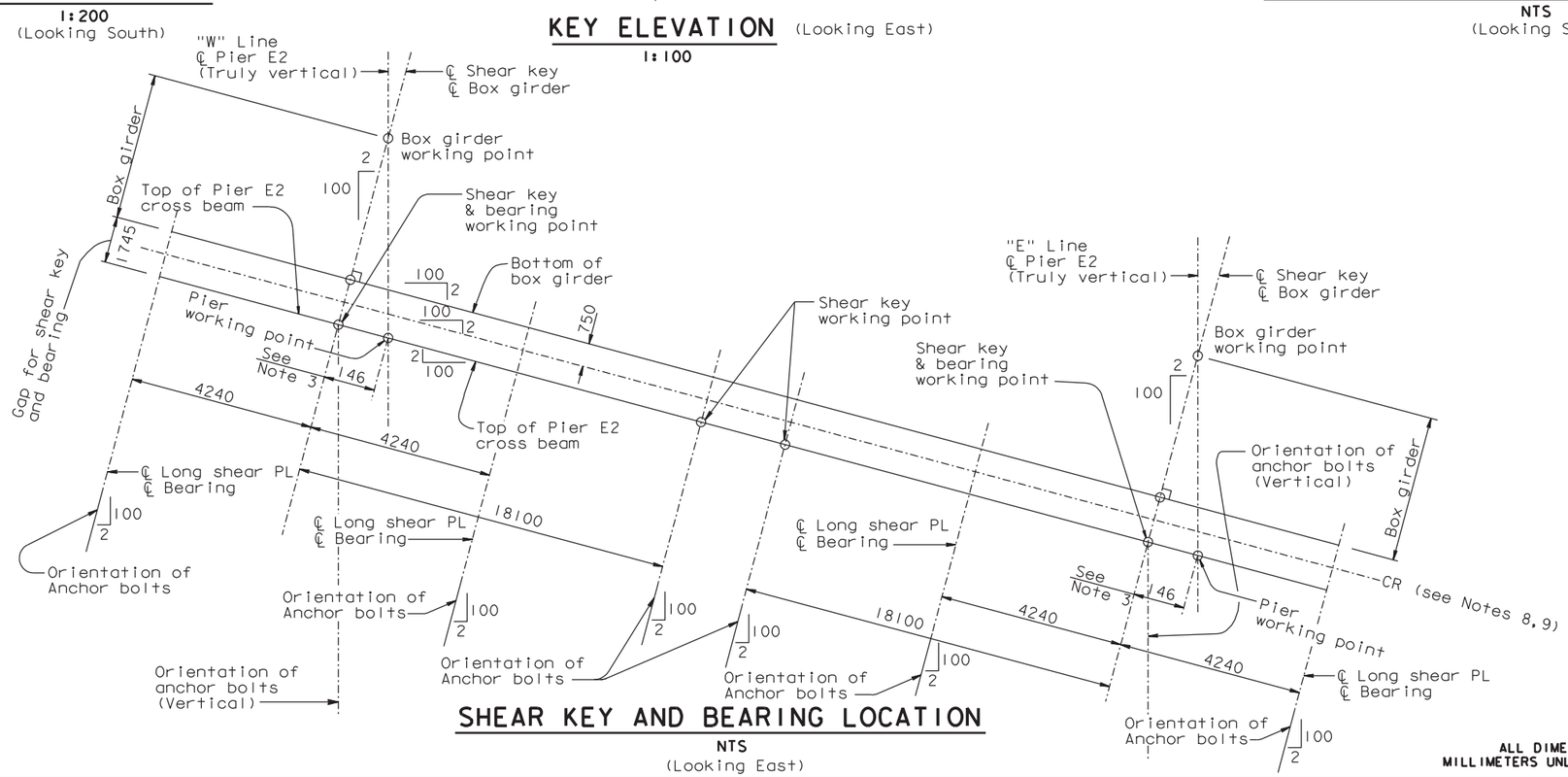

SHEAR KEY AND BEARING LOCATION

NTS
(Looking East)

ALL DIMENSIONS ARE IN MILLIMETERS UNLESS OTHERWISE SHOWN

NOTES:

1. For Detail A, see "Pier E2 Bearing Details No.1" sheet.
2. Detail B is a section view at center line of shear key. For Detail B, see "Pier E2 Shear Key Details No.1" sheet.
3. Offset value is shown for information only. The Contractor shall calculate the offset and verify it in the field before placing the bearings and shear key.
4. The Contractor shall submit the construction sequence of the shear key and bearings based on his ways and means for the Engineer's approval.
5. For floor beam E2, see "Girder at Pier E2" sheets.
6. For longitudinal shear plate, see "Girder at East Transition No.1" sheet.
7. Box girder work point is on the finished profile grade which is the top of 50 mm overlay.
8. At the Contractor's option, small holes may be drilled through the bearings and shear keys for use with a laser alignment method. All holes shall be plugged with tapped screws after bearing and shear key installation.
9. The center of rotation CR shall be a straight line through the pin center of all four bearings, and perpendicular to the bridge axis direction.

100 % PS&E

DATE PLOTTED => 08 OCT 2008 TIME PLOTTED => 15:33:19

R. Valizadeh/V. Toan/Y.L./W.L./F.C.
DESIGN OVERSIGHT
Roya Valizadeh / Vong Toan / Y. Liu
SIGN OFF DATE 09/26/08

	BY	CHECKED
DESIGN	M. Nader	L. Rus
DETAILS	N. Vo	J. Leventini
QUANTITIES	N. Vo	J. Leventini

PREPARED FOR THE STATE OF CALIFORNIA DEPARTMENT OF TRANSPORTATION

R. Manzanarez
PROJECT ENGINEER

BRIDGE NO. 34-0006L/R
KILOMETER POST 13.2/13.9

SAN FRANCISCO OAKLAND BAY BRIDGE
EAST SPAN SEISMIC SAFETY PROJECT
SELF-ANCHORED SUSPENSION BRIDGE
(SUPERSTRUCTURE & TOWER)

PIER E2 BEARING AND SHEAR KEY LAYOUT

Rev. Date: 5-18-98

ORIGINAL SCALE IN MILLIMETERS FOR REDUCED PLANS 0 10 20 30 40 50 60 70 80 90 100

CU 04
EA 0120F1

DISREGARD PRINTS BEARING EARLIER REVISION DATES

REVISION DATES (PRELIMINARY STAGE ONLY) 04/08/02 07/01/02 12/19/02 12/07/05

SHEET 465R1 OF

USERNAME => ptom

FILE => I:\bb\04-0120I\sas\contract plans and cco\cco\in progress\cco#71\original 09-26-08\dgn\aksrd01.dgn

DIST.	COUNTY	ROUTE	KILOMETER POST TOTAL PROJECT	SHEET NO.	TOTAL SHEETS
04	SF	80	13.2/13.9	884R1	1204

Caltrans Metric

REGISTERED ENGINEER - CIVIL

12-6-04

PLANS APPROVAL DATE

REGISTERED PROFESSIONAL ENGINEER Marwan N. Nader No. C 054426 Exp. 12/31/09 CIVIL STATE OF CALIFORNIA

The State of California or its officers or agents shall not be responsible for the accuracy or completeness of electronic copies of this plan sheet.

T.Y. LIN / MOFFATT & NICHOL
825 BATTERY STREET
SAN FRANCISCO, CA 94111

Caltrans now has a web site! To get to the web site, go to: http://www.dot.ca.gov

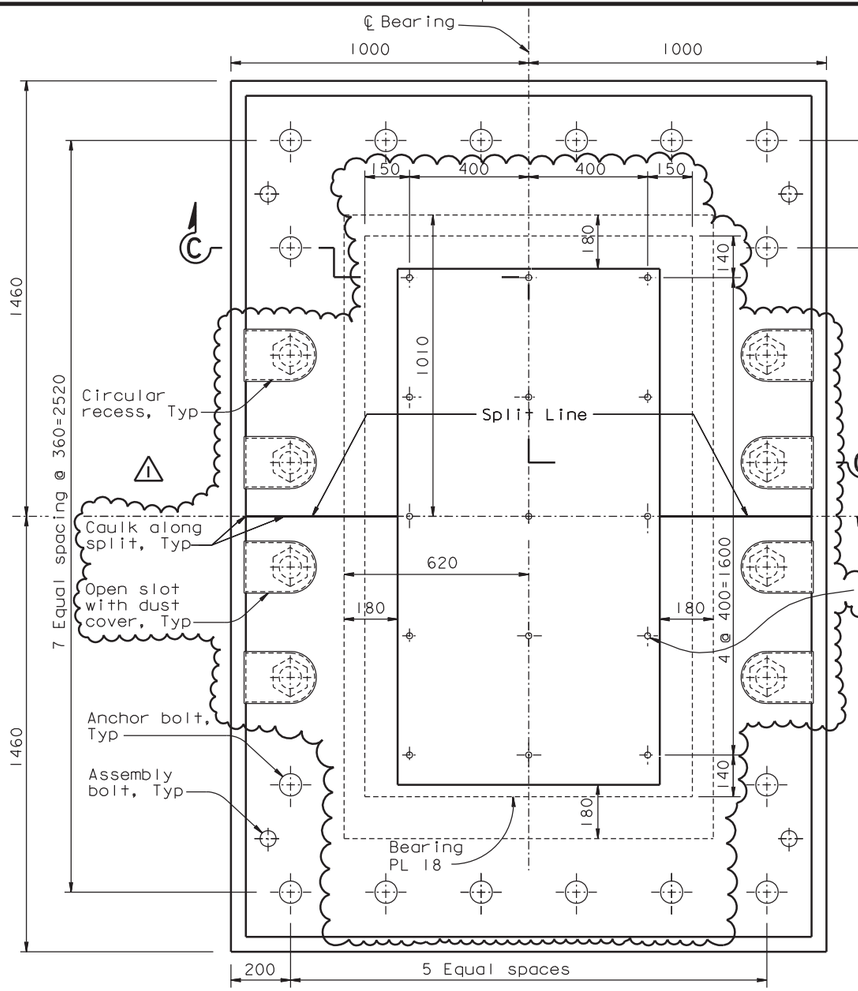

BEARING HOLD DOWN ASSEMBLY PLAN

1:10 (Looking down)

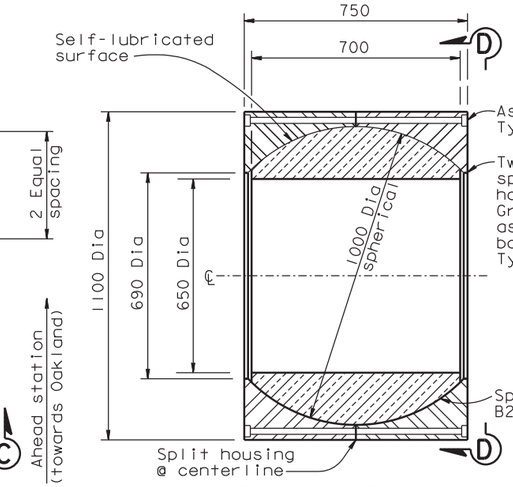

SPHERICAL BUSHING ASSEMBLY DETAIL

1:10

LEGEND:

Indicates zone with Level 1 testing requirements

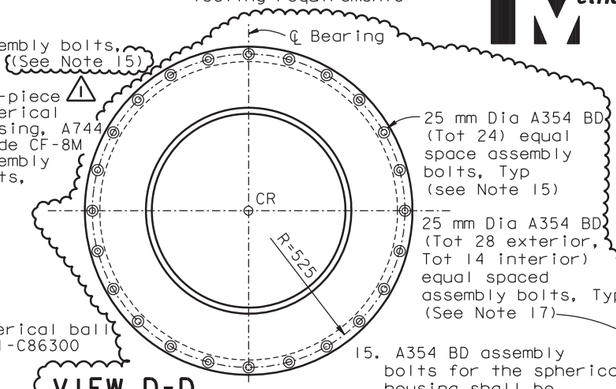

VIEW D-D

1:10

15. A354 BD assembly bolts for the spherical housing shall be stressed to 0.7 Fy.

16. For Detail A and A', see "Pier E2 Bearing Details No. 2A" sheet.

17. A354 BD assembly bolts for the retaining ring plate shall be installed snug-tight plus 1/4 turn.

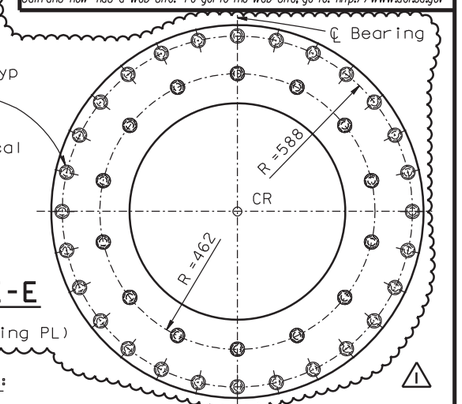

VIEW E-E

1:10 (Retaining Ring PL)

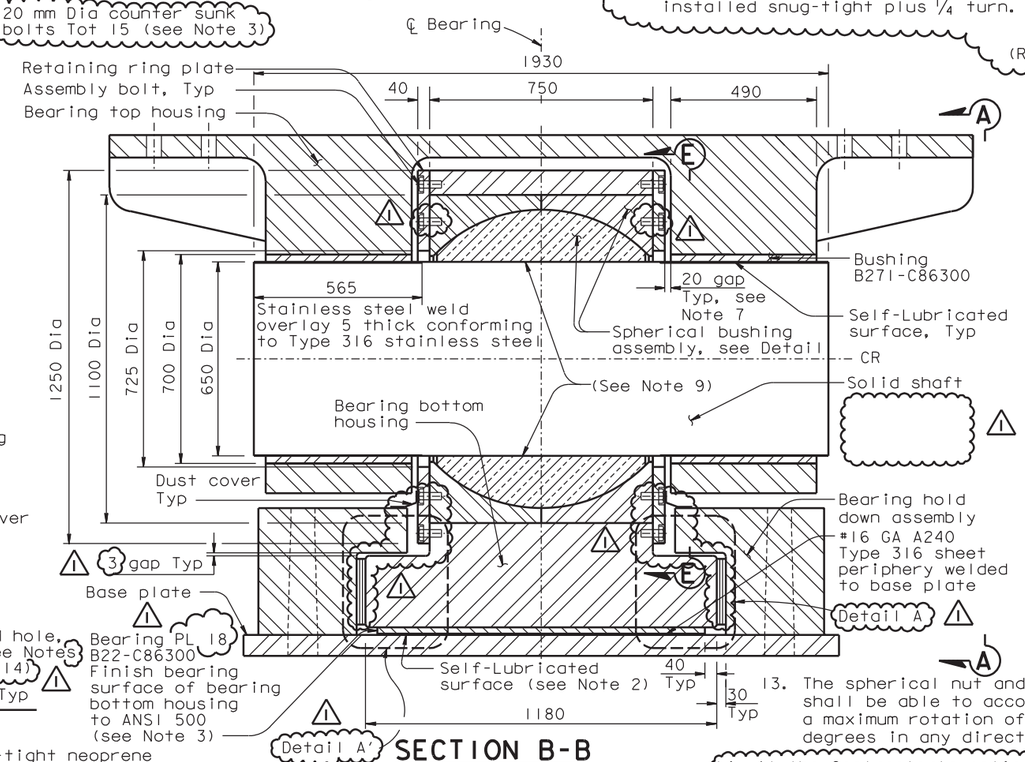

SECTION B-B

1:10

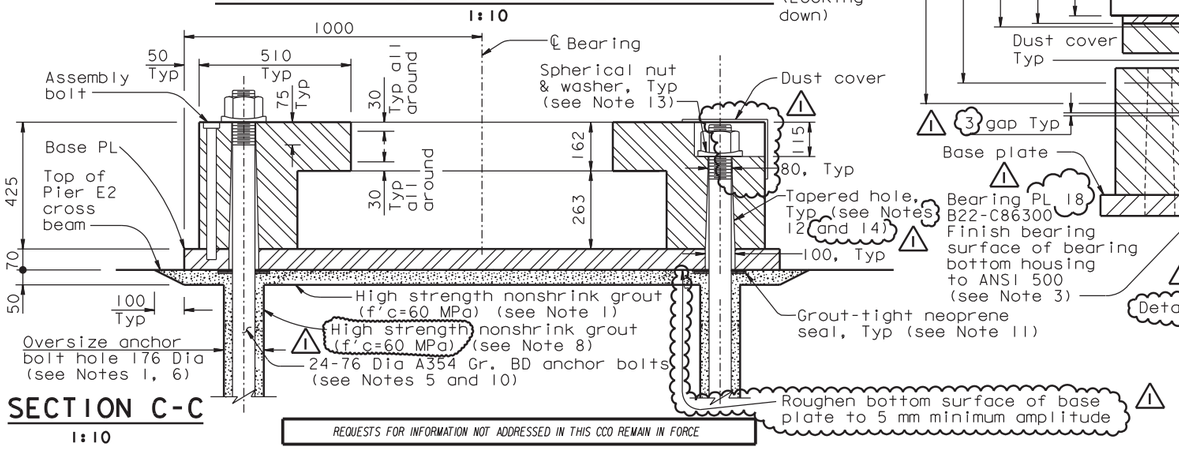

SECTION C-C

1:10

13. The spherical nut and washer shall be able to accomodate a maximum rotation of 3 degrees in any direction.

14. At the Contractor's option, the tapered anchor hole may increase to 200 in lieu of the 100 shown on the plans.

NOTES:

1. The grout pad thickness is shown for information only. The Contractor shall verify in the field the grout pad thickness required to align the center of rotation of the shear key and bearings at 0.750 m from the bottom surface of the box girder.
2. The lubricant shall be Self-lubricated.
3. Bearing plate shall be fastened to bottom of bottom housing using A240 Type 316 counter sunk bolts.
4. All assembly bolts shall be A240 Type 316 unless noted otherwise.
5. The anchor bolt shall be pretensioned to 70% of ultimate tensile strength. Wherever there is no access from the top, anchor bolt shall be prestressed from the bottom.
6. The oversize anchor bolt holes are provided to accommodate construction tolerances.
7. 20 mm gap ±2 mm shall be maintained on both sides during installation.
8. For additional prestressing details, see "Prestressing Notes" sheet.
9. Solid shaft in bushing is press fit.
10. The prestressed anchor bolts shall be wrapped in a PT supplier recommended debonding tape, subject to the review and approval of the Engineer.
11. Grout-tight neoprene seal shown is schematic and is for information only. The seal shall prevent any high strength nonshrink grout from seeping inside the anchor bolt tapered holes during grouting of the base plate. This is necessary for proper stressing of the anchor bolts. The Contractor may propose an alternate detail to suit his erection means and methods, subject to review and approval of the Engineer.
12. For tapered hole details, see "Pier E2 Shear Key Details No. 1" sheet.

REQUESTS FOR INFORMATION NOT ADDRESSED IN THIS CCO REMAIN IN FORCE

ALL DIMENSIONS ARE IN MILLIMETERS UNLESS OTHERWISE SHOWN

R. Valizadeh/V. Toan/Y.L./W.L./F.C.
DESIGN OVERSIGHT
Ryan Valizadeh / Vong Toan / Y. Liu
SIGN OFF DATE 09/26/08

Rev. Date: 5-18-98

MARK	DATE	DESCRIPTIONS	BY	CH'D	CCO#
1	09/26/08	E2 CROSS BEAM	MN	NV	71

REVISIONS

CONTRACT CHANGE ORDER NO. ____
SHEET ____ OF ____

DESIGN	BY M. Nader	CHECKED L. Rus	
DETAILS	BY N. Vo	CHECKED J. Leventini	
QUANTITIES	BY N. Vo	CHECKED J. Leventini	

PREPARED FOR THE STATE OF CALIFORNIA DEPARTMENT OF TRANSPORTATION

R. Manzanarez
PROJECT ENGINEER

BRIDGE NO. 34-0006L/R
KILOMETER POST 13.2/13.9

SAN FRANCISCO OAKLAND BAY BRIDGE
EAST SPAN SEISMIC SAFETY PROJECT
SELF-ANCHORED SUSPENSION BRIDGE
(SUPERSTRUCTURE & TOWER)

PIER E2 BEARING DETAILS NO. 2

ORIGINAL SCALE IN MILLIMETERS FOR REDUCED PLANS 0 10 20 30 40 50 60 70 80 90 100

CU 04
EA 0120F1

DISREGARD PRINTS BEARING EARLIER REVISION DATES

REVISION DATES (PRELIMINARY STAGE ONLY): 04/08/02 07/01/02 12/19/02 05/18/03 12/07/05

SHEET 467R1 OF

FILE => I:\bb\04-012001\sas\contract plans and cco\cco\in progress\cco#71\original 09-26-08\dgn\akbrg02.dgn

100% PS&E

TIME PLOTTED => 15:36:24
DATE PLOTTED => 08 OCT 2008
USERNAME => ptom

DIST.	COUNTY	ROUTE	KILOMETER POST TOTAL PROJECT	SHEET NO.	TOTAL SHEETS
04	SF	80	13.2/13.9	887R2	1204

Caltrans Metric

REGISTERED ENGINEER - CIVIL

12-6-04

PLANS APPROVAL DATE

REGISTERED PROFESSIONAL ENGINEER Marwan N. Nader No. C 054426 Exp. 12/31/09 CIVIL STATE OF CALIFORNIA

The State of California or its officers or agents shall not be responsible for the accuracy or completeness of electronic copies of this plan sheet.

T.Y. LIN / MOFFATT & NICHOL
825 BATTERY STREET
SAN FRANCISCO, CA 94111

Caltrans now has a web site! To get to the web site, go to: http://www.dot.ca.gov

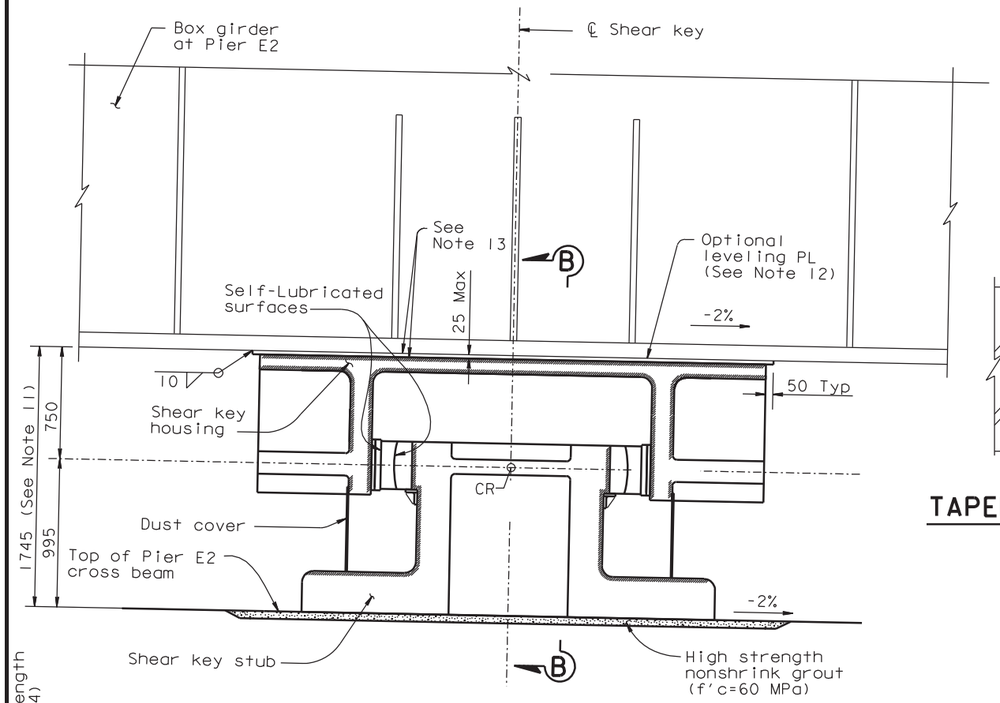

DETAIL B - SHEAR KEY ASSEMBLY

1:20
(Bolts not shown for clarity)
(Looking East)

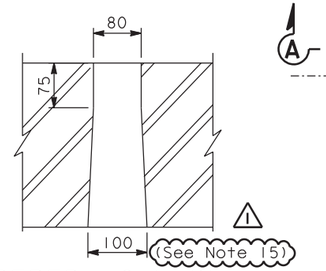

TAPERED HOLE DETAIL

1:5

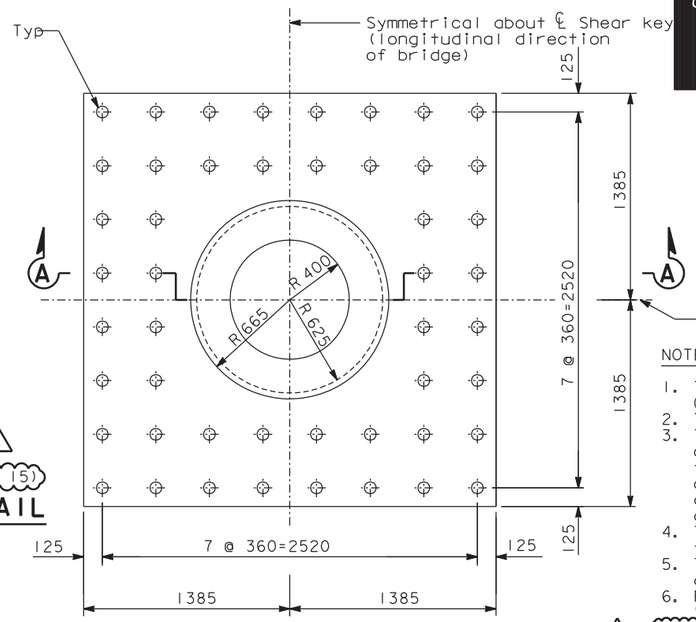

PLAN - SHEAR KEY STUB

1:20
(Anchor bolts not shown for clarity)

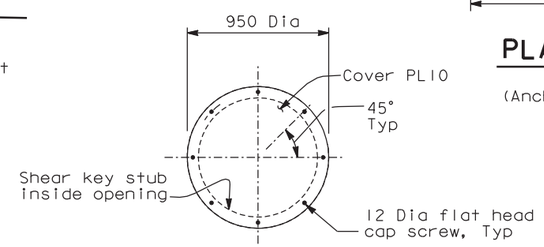

SECTION C-C

1:20

LEGEND:

CR — Center of Rotation

Indicates zone with Level I testing requirements

NOTES:

1. The shear key stub shall be Structural Casting Grade 345.
2. The lubricant shall be self-lubricated.
3. The grout pad thickness is shown for information only. The Contractor shall verify in the field the grout pad thickness required to align the center of rotation of the shear key and bearings at 0.750 m from the bottom surface of the box girder.
4. The anchor bolts shall be pretensioned by jacking to 70% ultimate tensile strength.
5. The oversize anchor bolt holes are provided to accommodate construction tolerances.
6. For additional prestressing details, see "Prestressing Notes" sheet.
7. The prestressed anchor bolts shall be wrapped in a PT supplier recommended debonding tape, subject to the review and approval of the Engineer.
8. The spherical nut and washer shall be able to accomodate a maximum rotation of 3 degrees in any direction.
9. Grout-tight neoprene seal shown is schematic and is for information only. The seal shall prevent any high strength nonshrink grout from seeping inside the anchor bolt tapered holes during grouting of the shear key stub. This is necessary for proper stressing of the anchor bolts. The Contractor may propose an alternate detail to suit their erection means and methods, subject to review and approval of the Engineer.
10. Bolted connection between shear key housing and box girder is slip-critical connection with class B contact surface.
11. The Contractor may provide optional leveling plates to achieve fit-up and level contact surfaces for the bearings and shear keys. The Contractor shall erect the E2 cap beam and E2 girders to the elevations and tolerances specified in the plans and special provisions.
12. Leveling plate shall be attached with plug welds at 0.5 m Max spacing, and a perimeter fillet weld.
13. All faying surfaces of the girder key plate, the shear key housing, and the optional leveling plate shall be machined after all welding for flatness and smoothness as specified for the top of the shear key housing. See "Pier E2 Shear Key Detail No. 2" sheet.
14. Extension length for anchor bolts at "E" Line and "W" Line shear keys shall be long enough to engage hydraulic jack.
15. At the Contractor's option, the tapered anchor hole may increase to 200 in lieu of the 100 shown on the plans.
16. The top shear key stub shaft section shall be "snug-fit" inside the spherical ring with a diameter gap between ring and stub of 1 mm Max.
17. At the Contractor's option, 10 mm radius may be used to facilitate stressing of anchor bolts.

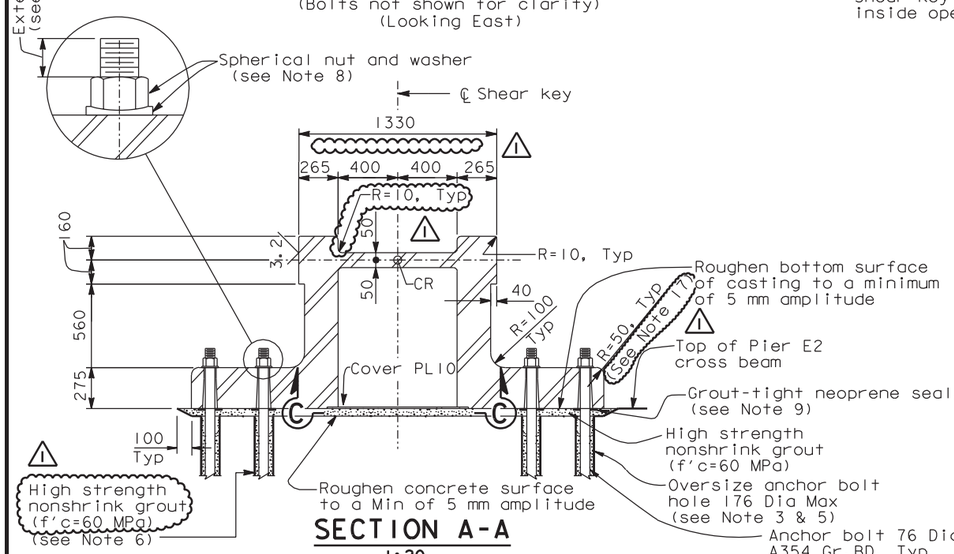

SECTION A-A

1:20

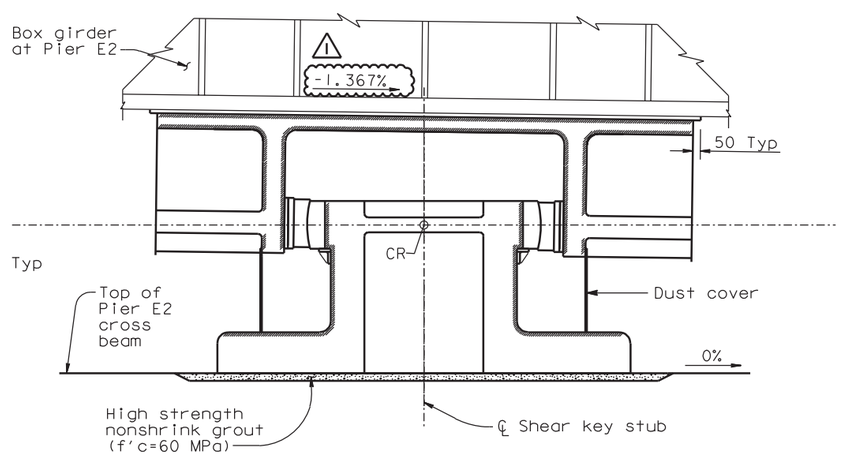

SECTION B-B

1:20
(Bolts not shown for clarity)

ALL DIMENSIONS ARE IN MILLIMETERS UNLESS OTHERWISE SHOWN

CONTRACT CHANGE ORDER NO. ____
SHEET ____ OF ____

REQUESTS FOR INFORMATION NOT ADDRESSED IN THIS CCO REMAIN IN FORCE

MARK	DATE	DESCRIPTIONS	BY	CH'D	CCO#
2	07/17/09	E2 CROSS BEAM	MN	NV	71
1	09/26/08	E2 CROSS BEAM	MN	NV	71

REVISIONS

R. Valizadeh/V. Toan/Y.L./W.L./F.C.
DESIGN OVERSIGHT

Roya Valizadeh / Vong Toan / Y. Liu
SIGN OFF DATE 07/17/09

Rev. Date: 5-18-98

	BY	CHECKED
DESIGN	M. Nader	J. Denis
DETAILS	N. Vo	J. Denis
QUANTITIES	N. Vo	J. Denis

PREPARED FOR THE STATE OF CALIFORNIA DEPARTMENT OF TRANSPORTATION

R. Manzanarez
PROJECT ENGINEER

BRIDGE NO. 34-0006L/R
KILOMETER POST 13.2/13.9

SAN FRANCISCO OAKLAND BAY BRIDGE
EAST SPAN SEISMIC SAFETY PROJECT
SELF-ANCHORED SUSPENSION BRIDGE (SUPERSTRUCTURE & TOWER)

PIER E2 SHEAR KEY DETAILS NO. 1

ORIGINAL SCALE IN MILLIMETERS FOR REDUCED PLANS 0 10 20 30 40 50 60 70 80 90 100

CU 04
EA 0120F1

DISREGARD PRINTS BEARING EARLIER REVISION DATES

REVISION DATES (PRELIMINARY STAGE ONLY) 04/08/02 01/04/02 12/18/02 05/16/03 12/01/05

SHEET 470R2 OF

FILE => I:\bb\04-012001\sas\contract plans and cco\cco\cco=71\4-revision 07-17-09\dgn\aksrd01a.dgn

100 % PS&E

USERNAME => altshansk DATE PLOTTED => 17 JUL 2009 TIME PLOTTED => 15:10:30

DIST.	COUNTY	ROUTE	KILOMETER POST TOTAL PROJECT	SHEET NO.	TOTAL SHEETS
04	SF	80	13.2/13.9	888R1	1204

REGISTERED ENGINEER - CIVIL

12-6-04

PLANS APPROVAL DATE

REGISTERED PROFESSIONAL ENGINEER Marwan N. Nader No. C 054426 Exp. 12/31/09 CIVIL STATE OF CALIFORNIA

The State of California or its officers or agents shall not be responsible for the accuracy or completeness of electronic copies of this plan sheet.

T.Y. LIN / MOFFATT & NICHOL
825 BATTERY STREET
SAN FRANCISCO, CA 94111

Caltrans now has a web site! To get to the web site, go to: http://www.dot.ca.gov

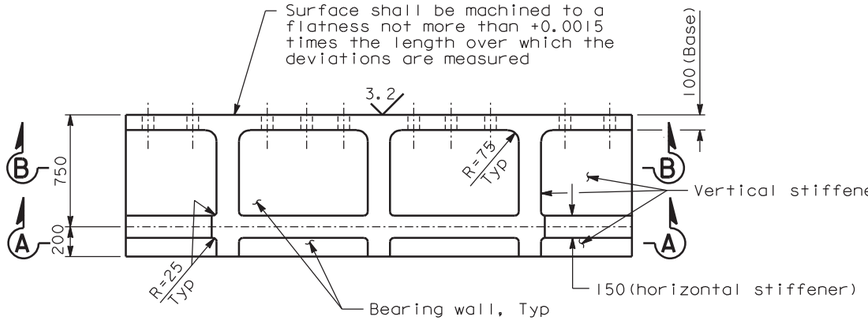

ELEVATION - SHEAR KEY HOUSING

1:20

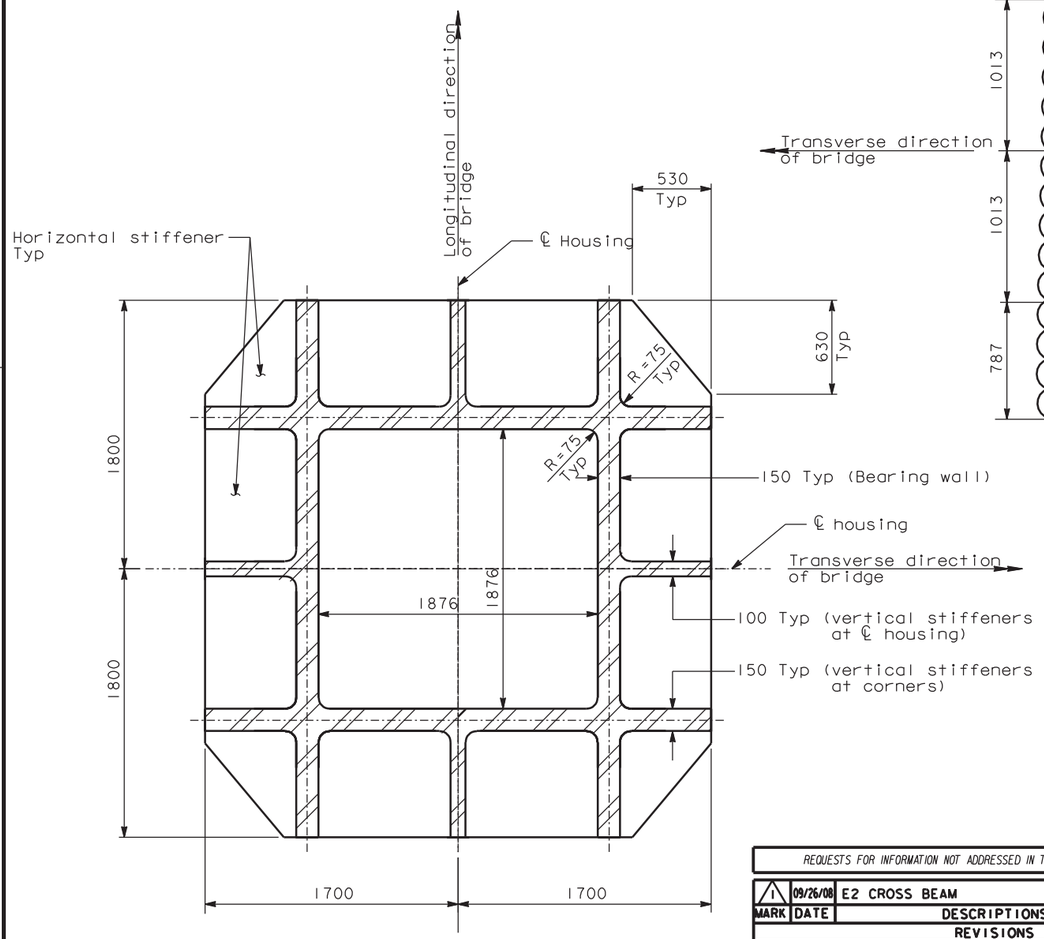

SECTION A-A

1:20

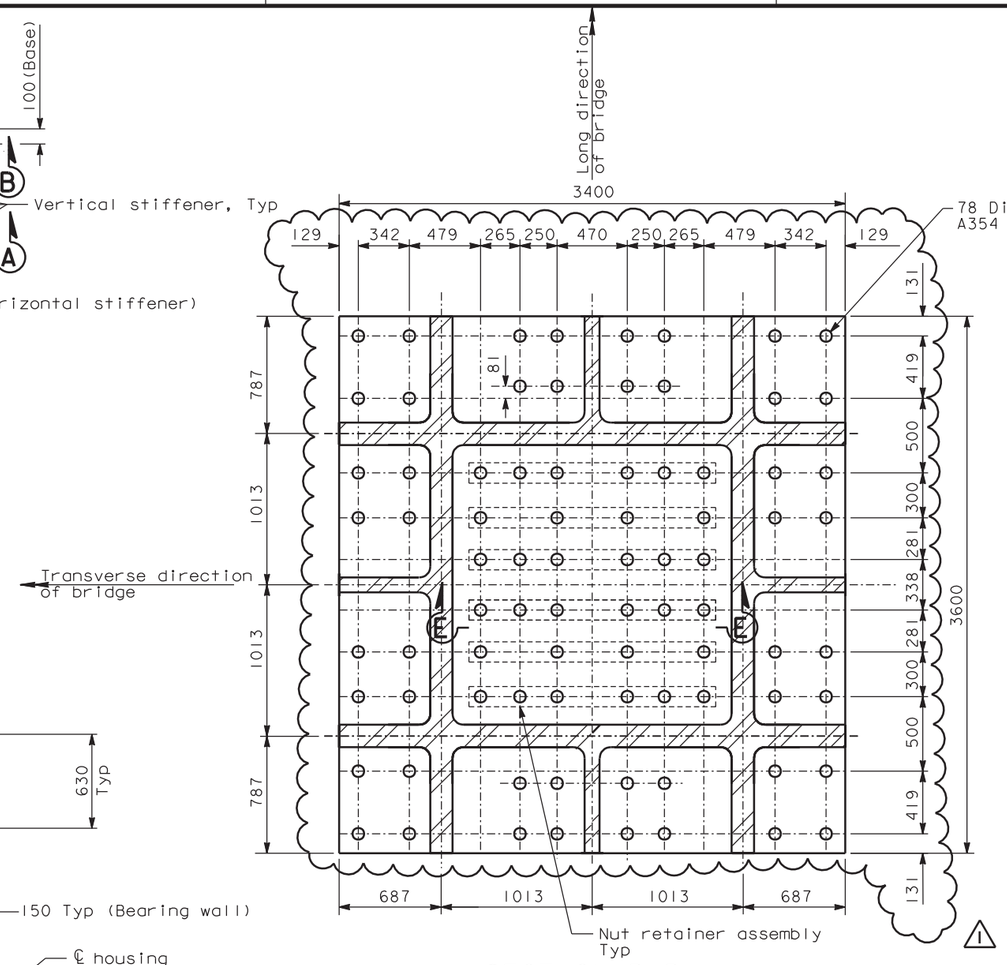

SECTION B-B

(For details not shown see Section A-A)

1:20

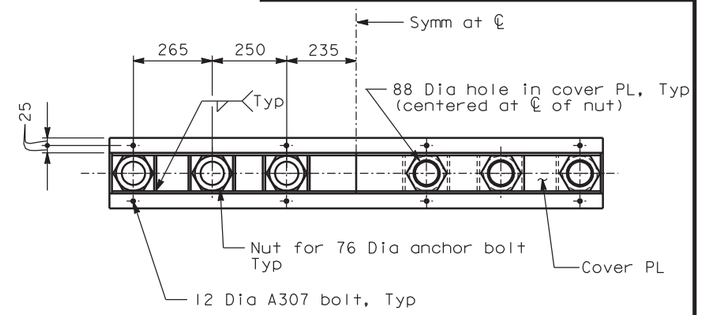

SECTION C-C

1:10

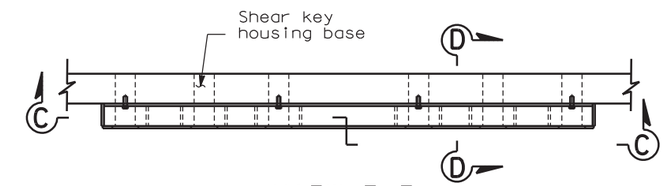

VIEW E-E

NUT RETAINER ASSEMBLY-ELEVATION

1:10

(All plates 8 mm thick)

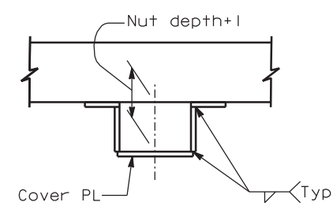

SECTION D-D

1:5

NOTES:

1. The shear key housing shall be Structural Casting Grade 345.
2. The shear key housing bolt layout shall accommodate the girder and crossbeam plate stiffener location. For girder details at Pier E2, see "Girder At Pier E2 details" sheet. For crossbeam details at pier E2, see "Crossbeam at Pier E2" sheets.
3. Bolt hole location shall be cross checked with the box girder and crossbeam stiffener layout before drilling holes. Bolt edge distance and clearance for tightening shall be verified and submitted for review and approval by the Engineer. A template shall be used to drill bolt holes in shear key housing and girder key plate to ensure hole matching.
4. The anchor bolts shall be pretensioned to 70% of ultimate tensile strength.
5. Nut retainer assemblies including nuts shall be installed to shear key housing prior to assembling housing to bushing and stub.
6. Machined washers at bolt heads shall be used if necessary at stiffener fillets.

REQUESTS FOR INFORMATION NOT ADDRESSED IN THIS CCO REMAIN IN FORCE

MARK	DATE	DESCRIPTIONS	BY	CH'D	CCO#
1	09/26/08	E2 CROSS BEAM	MN	NV	71

REVISIONS

CONTRACT CHANGE ORDER NO. ____
SHEET ___ OF ___

ALL DIMENSIONS ARE IN MILLIMETERS UNLESS OTHERWISE SHOWN

R. Valizadeh/V. Toan/Y.L./W.L./F.C.
DESIGN OVERSIGHT
Y. Liu
SIGN OFF DATE 09/26/08

	BY	CHECKED
DESIGN	M. Nader	J. Denis
DETAILS	N. Vo	J. Denis
QUANTITIES	N. Vo	J. Denis

PREPARED FOR THE STATE OF CALIFORNIA DEPARTMENT OF TRANSPORTATION

R. Manzanarez
PROJECT ENGINEER

BRIDGE NO. 34-0006L/R
KILOMETER POST 13.2/13.9

SAN FRANCISCO OAKLAND BAY BRIDGE
EAST SPAN SEISMIC SAFETY PROJECT
SELF-ANCHORED SUSPENSION BRIDGE
(SUPERSTRUCTURE & TOWER)

PIER E2 SHEAR KEY DETAILS NO. 2

Rev. Date: 5-18-98

ORIGINAL SCALE IN MILLIMETERS FOR REDUCED PLANS 0 10 20 30 40 50 60 70 80 90 100

CU 04
EA 0120F1

DISREGARD PRINTS BEARING EARLIER REVISION DATES

REVISION DATES (PRELIMINARY STAGE ONLY): 04/08/02 07/01/02 12/18/02 05/18/03 12/01/05

SHEET 47 OF 1R1

FILE => I:\bb\04-012001\sas\contract plans and cco\cco\in progress\cco#71\original 09-26-08\dgn\aksrd01b.dgn

100% PS&E

DATE PLOTTED => 08 OCT 2008 TIME PLOTTED => 15:40:47

USERNAME => ptom

DIST.	COUNTY	ROUTE	KILOMETER POST TOTAL PROJECT	SHEET NO.	TOTAL SHEETS
04	SF	80	13.2/13.9	981R2	1204

Caltrans Metric

REGISTERED ENGINEER - CIVIL

12-6-04

PLANS APPROVAL DATE

REGISTERED PROFESSIONAL ENGINEER John Sun No. C 54648 Exp. 12/31/05 CIVIL STATE OF CALIFORNIA

The State of California or its officers or agents shall not be responsible for the accuracy or completeness of electronic copies of this plan sheet.

T.Y. LIN / MOFFATT & NICHOL
825 BATTERY STREET
SAN FRANCISCO, CA 94111

To get to the web site, go to: http://www.dot.ca.gov

POST-TENSIONING CHARACTERISTICS ASSUMED FOR DESIGN

1. Prestressing strand
   - Friction curvature coefficient : 0.20
   - Friction wobble coefficient : 0.0007/m
   - Anchor set : 6 mm
2. Prestressing monostrand (Tie-down cables only)
   - Friction curvature coefficient : N/A
   - Friction wobble coefficient : 0.0007/m
   - Anchor set : 6 mm
3. High strength rods (where applicable)
   - Friction curvature coefficient : 0.25
   - Friction wobble coefficient : 0.0007/m
   - Anchor set : 2 mm
4. High strength PT rod (75 mm)
   - Friction curvature coefficient : 0.25
   - Friction wobble coefficient : 0.0012/m
   - Anchor set : 2 mm
5. Prestressing strands shall conform to ASTM A416, low relaxation, 7-wire strands, with guaranteed minimum ultimate strength of 1860 MPa.
6. Prestressing monostrands (Tie-down cables only) shall conform to ASTM A416, low relaxation, 7-wire strands, with guaranteed minimum ultimate strength of 1860 MPa.
7. High strength rods (ASTM A354 Grade BD) shall have a guaranteed minimum ultimate strength of 965 MPa.
8. High strength rods (ASTM A354 Grade BC) shall have a guaranteed minimum ultimate strength of 793 MPa.
9. High strength rods (ASTM A722) shall have a guaranteed minimum ultimate strength of 1030 MPa.
10. High strength PT rods (75 mm) shall have a guaranteed minimum ultimate strength of 1030 MPa.

PRETENSIONING/GROUTING SEQUENCE

1. The pretensioning and grouting sequence of the Pier W2 prestressing strand tendons and of the Pier W2 high strength anchor rods (anchor bolts) shall be included with the Contractor's erection plan. The Contractor shall submit the erection plan along with the pretensioning and grouting sequence to the Engineer for review and approval.
2. The pretensioning and grouting sequence of the Pier T1 (Tower) high strength anchor rods (anchor bolts) shall be included with the Contractor's erection plan. The Contractor shall submit the erection plan along with the pretensioning and grouting sequence to the Engineer for review and approval.
3. The pretensioning and grouting sequence of the Pier E2 prestressing strand tendons and of the Pier E2 Bearing and Pier E2 Shear Key high strength anchor rods (anchor bolts) shall be included with the Contractor's erection plan. The Contractor shall submit the erection plan along with the pretensioning and grouting sequence to the Engineer for review and approval.

STRESSING FORCE LIMITS

1. All high strength anchor rods (anchor bolts) shall be pretensioned by jacking to 70% of their ultimate tensile strength, unless noted otherwise.
2. Force in all permanent high strength prestressing tendons shall not exceed 70% of the guaranteed minimum ultimate strength of the tendon after seating.
3. Force in all permanent high strength rods (anchor bolts) shall not exceed 70% of the guaranteed minimum ultimate strength of the bar after seating.

CONCRETE

1. A minimum compressive strength of 36 MPa (f'ci) shall be attained in the concrete of Pier W2 and Pier E2 crossbeams prior to stressing.

HIGH STRENGTH NONSHRINK GROUT

1. All high strength nonshrink grout shall attain a minimum compressive strength of f'ci=75% f'c (MPa) prior to being subjected to subsequent loading and before pretensioning operations.

PT DUCTS

1. Ducts for prestressing strand tendons and high strength rods (anchor bolts) shall consist of galvanized corrugated steel ducts, unless noted otherwise.
2. Prebent ducts shall be used for prestressing tendons with radius less than 10 m.
3. Prestressing strand tendon suppliers shall provide and use extra strong steel pipes (ASTM A53 Type S, Grade B (fy = 240 MPa) and necessary hardware connecting the steel pipes to galvanized corrugated steel ducts where radius of PT ducts is less than 5000 mm.
4. Based on the Contractor's stressing sequence, local strengthening of PT ducts (e.g. extra strong steel pipes) at critical location's may be required.

GROUT FOR PT DUCTS/PIPE SLEEVES

1. Tie-down cables with monostrands shall not be grouted.
2. Ducts shall be grouted with nonshrink grout (f'c=60 MPa).
3. Nonshrink grout shall attain a strength of 36 MPa (f'ci) minimum before being subjected to stresses due t subseqent loading.

BLOCKOUT CONCRETE

1. After completion of all pretensioning and grouting operations, the blockout closure reinforcement shall be bent into place over the anchors before the blockouts are filled with concrete (f'c=60 MPa).

REGISTERED PROFESSIONAL ENGINEER Marwan N. Nader No. C 054426 Exp. 12/31/07 CIVIL STATE OF CALIFORNIA

FOR REVISIONS ONLY

MARK	DATE	DESCRIPTIONS	BY	CH'D	CCO#
2	02/28/07	TIE-DOWN CABLE PRESTRESSING NOTES	JD	AS	23
1	07/21/06	CONCRETE STRENGTH, ISD	MN	NV	23

REVISIONS

CONTRACT CHANGE ORDER NO. ____
SHEET ___ OF ___

ALL DIMENSIONS ARE IN MILLIMETERS UNLESS OTHERWISE SHOWN

SAN FRANCISCO OAKLAND BAY BRIDGE
EAST SPAN SEISMIC SAFETY PROJECT
SELF-ANCHORED SUSPENSION BRIDGE
(SUPERSTRUCTURE & TOWER)

PRESTRESSING NOTES

R. Valizadeh/V. Toan/Y.L./W.L./F.C.
DESIGN OVERSIGHT
SIGN OFF DATE 02/28/07

	BY	CHECKED
DESIGN	J. Sun	J. Duxbury
DETAILS	J. Sun	J. Duxbury
QUANTITIES	J. Sun	J. Duxbury

PREPARED FOR THE STATE OF CALIFORNIA DEPARTMENT OF TRANSPORTATION

R. Manzanarez
PROJECT ENGINEER

BRIDGE NO. 34-0006L/R
KILOMETER POST 13.2/13.9

Rev. Date: 5-18-98

ORIGINAL SCALE IN MILLIMETERS FOR REDUCED PLANS 0 10 20 30 40 50 60 70 80 90 100

CU 04
EA 0120F1

DISREGARD PRINTS BEARING EARLIER REVISION DATES

REVISION DATES (PRELIMINARY STAGE ONLY) 04/08/02 07/24/02 12/19/02

SHEET 564R2 OF

FILE => I:\bb\04-012001\sas\contract plans and cco\cco\cco#23\updates\agptn01.dgn

100% PS&E

DATE PLOTTED => 16 MAR 2007 TIME PLOTTED => 13:13:32

USERNAME => bkwok

July 23, 2007

PROJECT INFORMATION

04-0120F4
Self Anchored Suspension Bridge

SUBJECT

Office of Structural Materials (OSM) Audit of Dyson Company.

OVERVIEW

The Dyson Company successfully completed the Material Fabrication Self-Qualification Audit (MFSQA) on April 13, 2007, per Special Provisions section 8-4.01. The Department audited Dyson facilities on July 10, 2007. Present during the audit were representatives of OSM: Mr. John Kinsey, CALTRANS Senior Level III, and Mr. Markian Petrina, Structural Materials Representative; and representatives of American Bridge/Fluor, a Joint Venture (ABF): Mr. Dan Radu, ABF Steel Fabrication Manager and Mr. Charles Kanipicki, P.E., ABF Quality Control Manager. Representing the fabricator was Mr. Steve Marsh, Dyson Quality Assurance Manager.

DISCUSSION

The audit opened with opening remarks by Mr. Kinsey, who explained the function of OSM and the purpose of the audit. Mr. Marsh then provided a brief history of the Dyson Company. For more than a century (founded in 1884, according to Dyson promotional materials), Dyson Company has been producing fasteners for various purposes. Following a 1992 bankruptcy, Mr. Ted Wolfe, Sr., became the principal owner; various family members now occupy important positions within the company, including Mr. Ted Wolfe, Jr., General Manager; Ms. Kristin Wolfe, Sales Manager.

As constituted today, Dyson is comprised of four divisions:

1. Dyson Rod, the division of primary interest for this audit, which produces large-diameter anchor rods, primarily for the wind turbine market;
2. Dyson Fork, which produces lift truck forks;
3. Dyson, the division of secondary interest for this audit, which produces forgings and large fasteners;
4. Dyson Dependable, which fabricates ASME-certified fasteners and materials for stringent-specification military and nuclear applications.

According to Mr. Marsh, the distinction between the four Dyson divisions is largely administrative: equipment and the approximately 100 employees are shared between the four divisions interchangeably.

Apart from these divisions, Dyson purchased Texas Bolt & Nut out of bankruptcy. Texas Bolt is currently a distribution point for fasteners, particularly nuts, as well as stud production. Texas Bolt deals heavily with overseas business.

Following his historical and organizational summaries, Mr. Marsh described the process for material handling. He stated that material is often prequalified through mill certification (mill cert) review, eliminating the need for receiving inspectors to verify the suitability of raw material, primarily rod, for intended purpose. Mr. Marsh clarified by stating that only the mill certifications were pre-qualified for appropriate chemical and mechanical characteristics. Certifications are kept on record between one and seven years, typically leaning toward the longer period. Mr. Marsh explained that retention of records is to assist with Dyson's internal traceability.

Mr. Marsh also elaborated on the fact that records are maintained for longer periods in association with what he called "semi-finished" products, particularly A 325 bolts. A variety of material is forged and heat treated, then sent into stock as blanks. It is kept in storage, after which it is wheel abraded and finished. OSM auditors saw this material in storage bins during the tour. A significant proportion of such "semi-finished" product was heavily corroded (Picture 1) and covered with large amounts of rust; Mr. Marsh stated that the rust would be made irrelevant by machining down heavily-corroded bolt shafts and wheel-abrading corroded bolt heads. OSM did not observe any such operations.

Orders of raw materials are based on ASTM requirements, and any special requirements from a given contract. When those are determined, the manufacturing sequence is adapted to satisfy each situation. The customer is then provided the manufacturing sequence and any customer hold points are included in the process.

According to Mr. Marsh, ASTM A 354 BC and BD fasteners undergo full-size testing, i.e., full-diameter cross-section, as opposed to coupons machined from sampled fasteners and rods, as well as coating certification. Although Dyson does not have certified nondestructive testing (NDT) personnel, when the customer requests, Dyson personnel perform informal MT, particularly on the outside elbows of bent rods.

Mr. Marsh informed OSM auditors that NDT where it is part of the specification, such as for A 490 bolts, is sent to outside laboratories with qualified NDT personnel. For A 490 bolts, Dyson's preference is magnetic particle testing (MT). Stork-Herron laboratories, which was also audited on this trip (mechanical testing: pass; NDT: contingent pass; please see relevant report), was specified as the NDT laboratory with full capabilities for MT and liquid penetrant testing (PT). Mr. Marsh also mentioned Ultralabs, Inc., which he states are NADCAP-qualified and are capable of MT, PT, and radiographic testing (RT; RT is not relevant to Dyson's work for ABF).

Mr. Kinsey informed Mr. Marsh that if Dyson wishes to have NDT performed at Ultralabs, they must submit an MFSQA and be audited by the Department before being acceptable on the project; Mr. Marsh indicated that he would consider this, although he believed that Stork-Herron would be capable of handling any NDT by themselves, as NDT requirements are expected to be minor for relatively small orders of A 490 bolts,.

Rotational capacity (ro-cap) testing was also discussed. Mr. Marsh indicated that Dyson was seriously considering the purchase of a large, automated ro-cap machine manufactured by Skidmore, the primary manufacturer of ro-cap equipment. According to Mr. Marsh, this machine is superior to human testing on a standard, manual Skidmore because the automated machine holds a constant force and there is no start-and-stop associated with manual machines.

However, according to Mr. Marsh, apart from hardness, threading, and rotational capacity, all other tests, such as wedge testing, are farmed out to laboratories. Mr. Marsh mentioned laboratories in Pittsburgh (name not provided) that is capable of testing large A 354 BD rods whose testing requirements exceed the 400 kip capacity that Mr. Marsh says is possessed by Stork-Herron. However, Mr. Marsh believed that it will not be necessary to employ the Pittsburgh laboratory. It is believed by Dyson that facilities in the Cleveland area will be adequate for fasteners and shorter rods.

For galvanizing, North American Galvanizing (audited on this trip: Fail) and The Art Galvanizing (also audited on this trip: Conditional Pass). North American was characterized as Dyson's large-capacity galvanizer, while The Art is for smaller orders, and Mr. Marsh spoke positively about The Art's capabilities.

Mr. Kinsey discussed special requirements for galvanizing with Mr. Marsh, including the Department's prohibition of stripping/re-dipping material with inadequate galvanizing, as well as the requirements for blasting A 354 BD material as opposed to pickling, prior to galvanizing. Mr. Marsh expressed familiarity with the A 354 BD requirements, and indicated that this would be part of Dyson's purchase order for galvanizing. He also indicated that galvanizers would be informed that stripping/re-dipping would not be permitted.

In response to Mr. Kinsey's question about Dyson's ability to verify the work of galvanizers, Mr. Marsh indicated that Dyson has no capability for testing galvanizing thickness. Dyson was not anticipating such a requirement, and Mr. Marsh indicated that it would be something examined by Dyson management in light of OSM's emphasis that Dyson, not the subcontractor, was accountable for the proper thickness of coating on all fasteners.

In addition, OSM and ABF discussed the possibility of anchor rods being painted. Mr. Kinsey indicated that should this course of action be chosen, Dyson would be responsible for ensuring that whoever paints the rods must be certified.

Mr. Marsh expressed willingness to work with CALTRANS to perform sampling. He stated that Dyson is accustomed to such practices from what Mr. Marsh characterized as frequent previous work with the Pennsylvania and Missouri Departments of Transportation.

The necessity for ensuring lot and heat segregation was emphasized by Mr. Kinsey. Mr. Marsh indicated that his inspectors are not aware of "preapproved" mill certs, and that only Mr. Marsh and his Assistant QA manager, Ms. Diane Smith, are aware of this fact. Mr. Marsh also indicated that lots are physically separated to prevent mixing, and Dyson understands segregation to maintain integrity. Dyson's tracking system has a randomly-generated three-letter code for each separate purchase order. If more than one container is needed for an order, a number is added to the three-letter identifier, as shown in Picture 1.

Heat treatment was also discussed. Mr. Marsh indicated that Dyson is capable of heat treating rods up to approximately 12 feet in length; the longer rods required for the contract, some of them 30 to 40 feet long, will be shipped to T.C. Industries in the Chicago area. Mr. Marsh indicated that T.C. Industries will be capable of handling such lengths of rod.

As for shipment of product, Mr. Marsh indicated that this is a function of the product itself, taking into account fragility and coatings. Long rods will be burlap-wrapped and banded with metal strapping and sent on flatbed trucks. Dyson does possess shrink wrap capacity. Fasteners will be in cardboard half-keg boxes attached to pallets with nylon webbing. Mr. Marsh stated that no problems were encountered with shipment of fasteners to the Tacoma Narrows project in Washington. Preassembly of parts may be done if indicated in the contract, although Mr. Radu and Mr. Marsh pointed out that it is not standard practice to assemble mechanically-galvanized parts.

Mr. Radu indicated that ABF will not permit winter shipment, and that most products will be contained in enclosed trailers, and his confidence in Dyson's good record for shipping. Mr. Kinsey emphasized that Dyson is responsible for its vendors' methods.

Dyson is reports normal production capability of attaining hardness within ±2 on the Rockwell C scale. If a closer tolerance than ±2 is required, smaller lots and more careful monitoring is required. Mr. Marsh indicated that the maximum limit is generally on tensile strength, not hardness, and that the tensile requirements are generally adequate if the proper hardness is met. According to Mr. Marsh, subcontractors are held to the same standards that Dyson applies to itself.

When inspection was discussed, Mr. Marsh indicated that all required testing will be documented, including mechanical testing from suppliers, who will have to prove conformance to contract requirements as ordered by Dyson.

Mr. Marsh also indicated that Dyson has three inspectors. None of these inspectors are qualified to SNT-TC-1A standards for visual inspection. Mr. Marsh expressed a high degree of

confidence in his chief inspector, who performs calibrations and has been with Dyson for more than 20 years. The chief inspector's assistant has been with Dyson for approximately 6 months, and has previous forging experience and OSM was told also has a solid understanding of the process. The floor inspector is still learning his duties, and performs "spot" inspections at various places in the shop; Mr. Marsh indicated that although he is tested and qualified to Dyson's internal standards, the floor inspector's skills are in a state of being improved.

Ms. Debbie Smith, Mr. Marsh's personal assistant, holds the title of Assistant QA Manager and is not an inspector. Ms. Smith's functions are administrative in support of Mr. Marsh's duties as QA Manager, and she also reportedly handles some of the mill cert prequalification for incoming material. On the day of the audit, Ms. Smith was on scheduled vacation.

Mr. Kinsey discussed the METS green tag and orange tag processes for releasing material. It was emphasized to Dyson that METS must be given the opportunity to inspect material before it is released between facilities for various parts of the work.

During the course of the conversation Mr. Marsh stated that he is a part-owner of the Dyson Company. He expressed no concern about this possibly affecting his judgment as QA Manager. Mr. Marsh stated that he believed his part-ownership strengthened his desire for quality as someone directly concerned with the company's reputation.

During a tour of the Dyson Company facilities, the following areas were seen:

- Receiving
- Holding Area
- Forging and Bolt Production
- Heat Treatment
- Machining
- Inspection
- Nut Lubrication
- Shipping

Receiving

In the receiving area (Picture 2), it was noted that many pieces of rod and steel ingot stock rested on the ground (Picture 3), and a number of pieces had no traceability (Picture 3). The receiving clerk appeared unfamiliar with the concept of traceability, and indicated that the unmarked random pieces of stock were "never thrown away" and had "been here forever." He was not able to provide a link between this material and documentation. There was also no checklist, chart, or book for the receiving inspector to examine the material to certain specifications.

In response to Mr. Kinsey's question, the receiving inspector remarked that he had never seen the need to reject material. Both he and Mr. Marsh spoke repeatedly of "hardware" review, of the actual product, as opposed to "software" review, of the computerized certifications; the link between the two appeared tenuous at best on the material receiving end.

The receiving inspector remarked that if the heat number is mismarked or illegible, it is not a reason to reject. If the chemsistry and steel grade are correct, the material is accepted. Customer (Picture 4) and Dyson (Picture 5) tags on stock material identify most material.

Stock material, which OSM was told could be kept for many years, is kept in an area separate from immediate-use (1-2 weeks) material. The Dyson standard for straightness is one-eighth (1/8) inch distortion per five (5) feet of length, although numerous bundles were observed with visible "snaking" distortion, as well as large bends (Picture 6).

The receiving inspection is part of the forge shop, and not a QC function. QC appears to have little day-to-day contact with receiving and material actually stored in the stock yard.

Mr. Kinsey requested to verify the documentation on a randomly-selected bundle of rods (Picture 7). Dyson personnel were able to produce satisfactory records in a reasonable amount of time.

Holding Area

In the holding area, numerous bins of material were observed. One bin had no identification tag. Mr. Marsh was unable to identify this material. The bolts appeared to be ASTM F 568M. Mr. Marsh questioned one of the forge workers in the area; this individual identified the material to Mr. Marsh with what appeared to be a high level of confidence.

All other bins observed in this area by OSM, many of which contained similar F 568M bolts awaiting threading, were properly marked. However, many of the travelers appeared to be dirty and in some cases illegible. Mr. Marsh pointed out that there were duplicates in each envelope for such an eventuality. However, the second (clean) copy was not necessarily the version that was updated by production personnel.

Forging and Bolt Production

OSM observed forged materials, particularly large nuts. The forging ovens are depicted in Picture 8. Mr. Marsh initially stated that large nuts were completely identified by heat number; however, none such was found. Mr. Marsh later amended his statement to say that there will be no heat number added until after heat treatment. A picture of the nuts appears in Picture 9.

In addition, OSM observed the manual process of producing A 325 bolts (Picture 10). The bolt shafts were heated three at a time in an oven. A worker manually removed each shaft, inserted it into a press, and the head was forged on the shaft by four impacts. The bolts were then placed into a large holding bin. They subsequently move on to machining for threading.

The foreman's office is in the middle of the forging and bolt production area. There are no standards or specifications kept in the office. These are maintained in the inspection office.

In the outdoor storage area for what Dyson classifies “semi-finished” product, headed but unthreaded bolts await finishing. As previously mentioned, it was noted that many of these products (Picture 11) are heavily corroded, and Mr. Marsh indicated that the corrosion would be machined or abraded away,

Heat Treatment

The heat treatment area is one of the largest at Dyson. Dyson states that they have four temperature-surveyed, calibrated ovens in operation, along with a 12,000 gallon oil quench bath, and a 6,000 gallon water and synthetic oil quench bath.

Dimensional verification before heat treating is carried out by heat treating production personnel. The method for tracking verifications is apparently on a written record (Picture 12). It appears that Dyson does not have a method for marking tubs or buckets that have been checked. Mr. Kinsey remarked that soapstone is frequently employed by other facilities for such checks, but Mr. Marsh did not seem to regard the effort required for such tracking as worthwhile.

OSM observed ovens in operation, and inspected temperature records. It appears that temperature recording paper is not placed in the strip-chart recording thermometer at any consistent time. They are not replaced at midnight for the “next day,” but sometime between the end of the third (overnight) shift, which ends at 6 AM, and the first few hours of the first (day) shift (Picture 13).

OSM auditors observed that one of the strip charts appeared to be for the previous day. It transpired that the oven for which it was recording was down for maintenance, although this was not clearly indicated anywhere (Picture 13). In addition, the short-term “filing system” for recent graphs, some as old as two weeks, was under the desk blotter on the shift supervisor’s desk. Older graphs were filed in a drawer of the desk.

Mr. Kinsey pointed out these shortcomings in oven record keeping to Mr. Marsh. Mr. Marsh readily acknowledged these shortcomings and expressed willingness to correct them.

In the heat treatment area, OSM auditors observed a bin of nuts with no traceability paperwork. Neither Mr. Marsh nor the workers in the heat treatment area were able to identify these items, and no records were produced to explain their traceability by the end of the OSM tour approximately two hours later.

Except for the above instances, the heat treatment appeared to be organized and systematically run. The workers appeared to know their duties, and took care to insert and remove fastener components at the proper time from ovens (Picture 14). Picture 15 shows the heat treatment tracking method for various fastener lots.

Machining

In the machining area, OSM auditors observed numerous machine operators at lathes milling, threading, and tapping fasteners in various stages of completion. Mr. Marsh made a point of informing the auditors of the machine operators' numerous "in process" checks to ensure that the material was being properly made. However, upon closer examination, it appeared that many of the machine operators were relying exclusively on personally-owned calipers, which are not calibrated by Dyson. Dyson did indicate on their MFSQA that such personally-owned measurement equipment was used on the floor. On the audit, it was discovered that this was virtually the only in process measuring equipment for bolt manufacturing.

In one instance, OSM auditors found threaded rod where each piece was not marked. Identification of the group would have been obliterated by machining, because the bars were marked where thread would be cut.

With the process currently in place, there is no formal check on fasteners as they are machined, except by the production personnel. Dimensional problems would not be discovered until after heat treatment. However, Mr. Marsh stated that since it had never been a problem previously, he did not regard it as an item of major concern.

Inspection

The Dyson inspection team has an office near the shop floor. The chief inspector and assistant inspector have fasteners brought to them, although they often perform shop floor inspections as well. A third inspector does not sit in the office; he walks on the shop floor, randomly checking various processes. It was not clear where this individual sits, and where he prepares his reports, if any; OSM auditors did not meet this individual.

Threading "go/no-go" gauges are the most commonly-used (Picture 16). These are calibrated every year, although Dyson has an in-house one-month "grace period." This means that a six-month cycle is in reality seven months. The inspectors assured OSM auditors that the more frequently needed threading gauges are spot checked quite often, although this is not necessarily logged. However, this left open the issue of other measuring devices, such as calipers. Mr. Marsh remarked that standards do not prohibit a 30-day grace period, and that no one has ever questioned this practice before.

Calibration cycles are tracked on a spreadsheet, and printed out monthly. The printout indicated that a piece of equipment was due for calibration on June 5. This was moved to August 5 by the assistant inspector because the June 5 date was an error. Other than his own knowledge of the situation, there appeared to be no documentation to support this change.

Representative samples are drawn from production material. Dyson personnel are aware of, and have access to, ASTM F 1470 for sampling. According to Mr. Marsh and his inspectors, however, the number of samples is always provided by the client.

Standard final inspection procedure is to deburr, wash, sample, and inspect fasteners. Sample testing records are maintained for each lot on a sheet filled in by hand. Either the chief inspector or her assistant enter the ASTM or other specifications required for each lot of bolts. They then inspect bolts for dimensions and threading either on the shop floor or in their office. When they are in their office, the samples are apparently pulled and brought in by production personnel.

Mr. Marsh also demonstrated the optical comparator (Picture 17) and standard Brinnell hardness machine, as well as magnetic particle testing (MT) equipment (Picture 18). Although no one is qualified to ASNT standards for MT, Mr. Marsh indicated that he believes that Dyson personnel have sufficient knowledge of the procedures to satisfy Dyson and customers that the elbows of bent rods are acceptable.

Dyson has a standard Skidmore rocap testing machine (Picture 19). As previously discussed, Dyson intends to buy an automated, computerized rocap machine (brochure, enclosure). Dyson intends to perform all rocaps for SAS project A 325 galvanized bolts in-house.

Mr. Marsh also stated that any testing that his personnel are not qualified to perform for the record are sent to local laboratories. Turnaround is reportedly two to three days in most cases.

Nut Lubrication
In the nut lubrication area, OSM auditors viewed baths and baskets of nuts (Picture 20a). The baths consist of what Dyson describes as standard nut lubrication base fluid (Picture 20b) and admixtures. The fluid is periodically and automatically agitated.

Dyson Company is one of the few nut manufacturers who are able to lubricate just the inside face and threads of a nut. OSM auditors were shown the machine.

Shipping
OSM auditors reviewed shipping methods and procedures. Material was stacked in an orderly fashion, and appeared to have necessary accompanying paperwork (Picture 21).

Related Observation
Of note, OSM auditors visited three testing laboratories and three galvanizing facilities associated with Dyson during the trip that began at Dyson. Most of the facilities reported limited contact with Dyson, and Dyson had not actually audited any of these facilities. Mechanical Galv-Plating (MGP), submitted as a potential mechanical galvanizer, reported that Dyson had essentially severed their business relationship for upwards of a year, apparently due to cost decisions on Dyson's part, before asking MGP to fill out an MFSQA. MGP reports that during their extended association with Dyson, no one from the bolt manufacturer has visited their facility.

Information and requirements specific to the contract were not relayed to subcontractors by Dyson. Dyson answered "No" to Section M, item 10, "Did the manufacturer verify that all the

Secondary Processors have detailed QC plans and that they are certified to the QS 9000 standard?" Dyson's response implies that the only shortfall expected is in the area of QS 9000.

Dyson stated that suppliers are "well experienced and well-qualified" and that Caltrans visits and audits at "selected suppliers" have assured Dyson that "[Dyson is] capable of qualifying only those suppliers who can satisfy our and Caltrans quality expectations." Of the six Dyson subcontractors visited to date, only two received an unqualified passing grade: Tensile Testing Laboratories, and Mechanical Galv-Plating, which, as mentioned, has had no business contact with the latter for more than a year.

Dyson answered also responded "Yes" to Section M, item 11, "Have all the Secondary Processors (including zinc coating processors and heat treaters) been audited by the fastener manufacturer to verify compliance with Quality Control requirements?" The OSM audit of these facilities showed that this was not the case. Few of these facilities had the necessary Contract Documents (Standard Specifications and Special Provisions) and none were conversant with the requirements.

Two of the six Dyson subcontractors, North American Galvanizing (a major supplier), and Central Testing Laboratory have failed their audits for significant quality shortfalls. North American for material traceability, Central Testing for inadequate QC controls. Two others have received only a Contingent Pass: The Art Galvanizing for deficient QC, and Dyson's NDT laboratory, Stork-Herron, for significant NDT program shortfalls. This means that only two of six Dyson-submitted facilities satisfied contract requirements.

Exit Briefing
Several items were discussed with Dyson as items of concern that would be specifically mentioned in the audit report. MFSQA sections:
N, item 1. Receiving inspection is not adequate for reasons noted above.
N, item 6. Unidentified material in the storage yard requires guesswork as to origin and provenance; this must be corrected.
N, item 7. Material is in contact with the ground in the storage yard.
D, item 3. Written procedures are not put into practice.
Q, item 3. Strip charts are not well-organized and stored, and dates are inconsistent.
R, item 3. Calibration procedures are not consistent with industry standards, particularly with the 30-day "grace period."

In addition, during this time Dyson informed OSM and ABF that Technical Stamping will be the supplier for hardened F 436 washers. OSM indicated that Dyson should expect this facility to be audited.

FINDINGS

Dyson has not audited their subcontractors; in fact, Dyson's contact was arm's length. At least one facility reported no formal business association with Dyson for more than a year prior to the SAS project.

OBSERVATIONS

- Traceability is not completely reliable. Instances of material with questionable or no traceability were found both in the stock yard and on the shop floor.
- The receiving inspection is more check-in than inspection, and the receiving inspector is not well-versed in traceability. The receiving inspector indicated that in his four months in that position, he had never rejected any material because "it all complies."
- Material storage and handling shortfalls include: rod material without marking or documentation, rods twisted in storage piles, and substantial bending/bowing of material during storage and handling.
- Temperature record graphs for heat treating ovens are not consistently maintained.
- Machine operators rely almost exclusively on personal measuring equipment that is not calibrated or audited by Dyson.
- Dyson testing equipment is formally calibrated once per year, albeit with a 30-day "grace period," both of which (particularly the grace period) OSM finds questionable.
- Determination of production success in attaining necessary specifications is deferred until after heat treatment; in some cases, absence of negative customer feedback about product dimensional quality was cited as justification.
- Mr. Marsh, the Dyson Quality Assurance Manager, indicated that he is a part-owner of the Dyson Company.

RECOMMENDATIONS

- High-strength fasteners (A 325 and A 490) should be made fresh, not out of stored material, to ensure soundness. The "semi-finished" material was stored outdoors and was observed by OSM auditors to be, in many instances, heavily corroded.
- Require approval, in the form of a submittal, for the automated rotational capacity testing machine that Dyson intends to procure for this project.
- Dyson should ensure that all Dyson suppliers have necessary SAS documents and that they are conversant with requirements set forth by the contract.
- Dyson should have contingency plans for ensuring that product is supplied in a timely fashion should Dyson rely on galvanizers' certificates of compliance, if the galvanizing falls short of requirements.

ACTION ITEMS NOT OTHERWISE MENTIONED

- ABF should provide Dyson with Standard Specifications, Conformed Special Provisions, and (at ABF's discretion) contract drawings.

- Dyson should submit an MFSQA for Technical Stamping, Chesterfield Township, MI, the F 436 washer supplier, to ABF. OSM will schedule an audit when this MFSQA has been reviewed and accepted.

CONCLUSION

In the event that Dyson Company is considered for high-volume production of A 325 and A 490 bolts, Dyson's capacity for producing high-strength bolts should be closely reviewed in relation to that of larger manufacturers. Non-automated production methods in some areas may limit Dyson volume capabilities.

OSM recommends that the Dyson Company should be considered a **Contingent Pass.** The following issues need to be addressed to receive a passing grade:

- Traceability;
- Receiving procedures;
- Material storage and handling deficiencies;
- Calibration and improvement of record-keeping for calibrated instruments and process documents;
- Demonstration of proper tracking and auditing of requirements for subcontractors in accordance with Section M of the MFSQA.

Venkatesh S. Iyer, Ph.D., P.E.
Structural Materials Representative
Division of Engineering Services
Materials, Engineering and Testing Services
Office of Structural Materials

Document Number CAL 00

ILLUSTRATIONS (Pictures 1-21)

Picture 1. Unique, randomly-generated Dyson three-letter codes identify jobs; a numerical suffix as shown indicates a job consisting of more than one bin.

Picture 2. The Dyson Company storage yard has several aisles. Stock consists mainly of rods of various lengths and thicknesses, along with ingots for forging.

Picture 3. Numerous pieces of raw material were found on the ground in the Dyson Company storage yard.

Picture 4. Customer material tags provide information for receiving.

Picture 5. Dyson material tags are attached to stock material awaiting disposition. No 3-letter order identifier is assigned until material is associated with an order.

Picture 6. Closeup of the Dyson Storage Yard shows twisted (a) and bent (b) rod stock.

Picture 7. Randomly-selected material was chosen for record verification.

Picture 8. Dyson Company forging ovens are in the main facility.

Picture 9a. One of Dyson's specialties is large forged nuts.

Picture 9b. Closeup of a large forged nut shows the unique three-letter job identifier and The Dyson marking. Heat numbers are added after heat treatment.

Picture 10a. A worker produces A 325 high-strength bolts at Dyson Company. Note the shaft heating oven (circled). After the shaft reaches the necessary temperature, the worker manually holds each shaft in a press, where a hex head is attached to the shaft.

Picture 10b. A 325 bolts with heads attached await milling and threading.

Picture 11a. "Semi-finished" material that is stored outdoors at Dyson Company.

Picture 11b. A close-up view of 11a, showing heavy corrosion (circled).

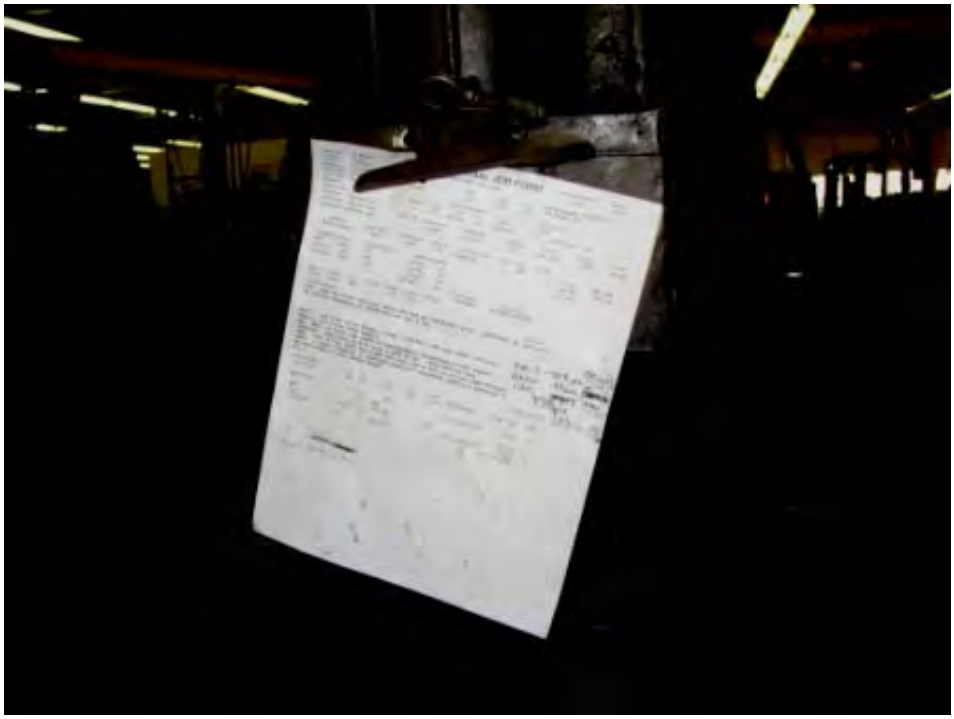

Picture 12. A tracking chart in the Dyson Company heat treating area shows various production operations.

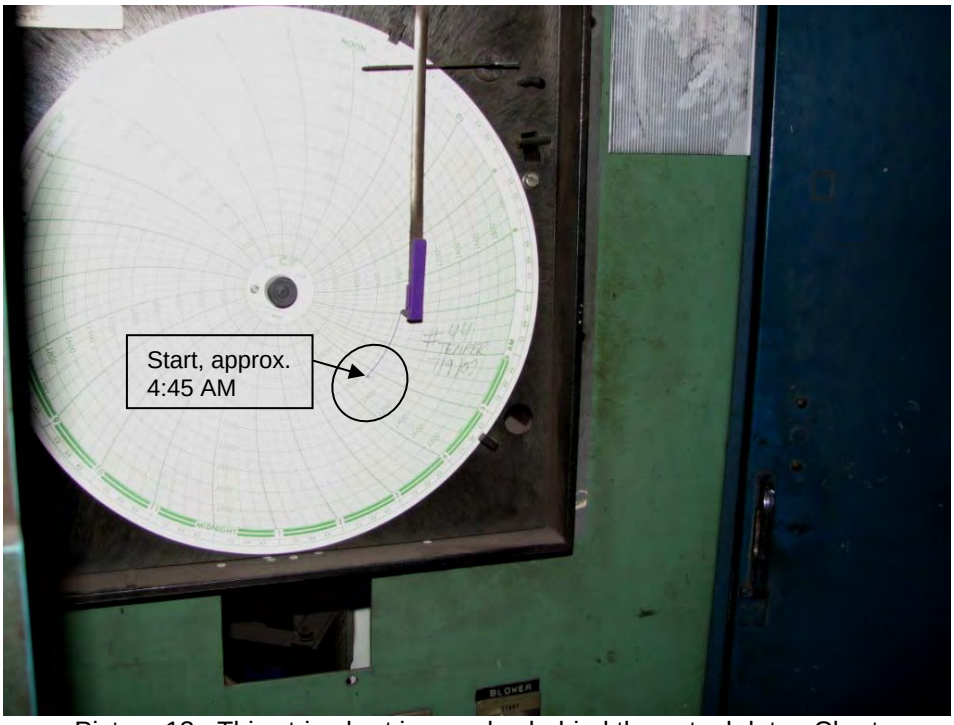

Picture 13. This strip chart is one day behind the actual date. Chart recording was stopped because the oven it monitored was shut down for maintenance, which is not clearly indicated. Recording for 7/9/07 starts at approximately 4:45 AM on 7/9/07(circled), not at midnight.

Picture 14. Dyson Company heat treating ovens operate on three shifts.

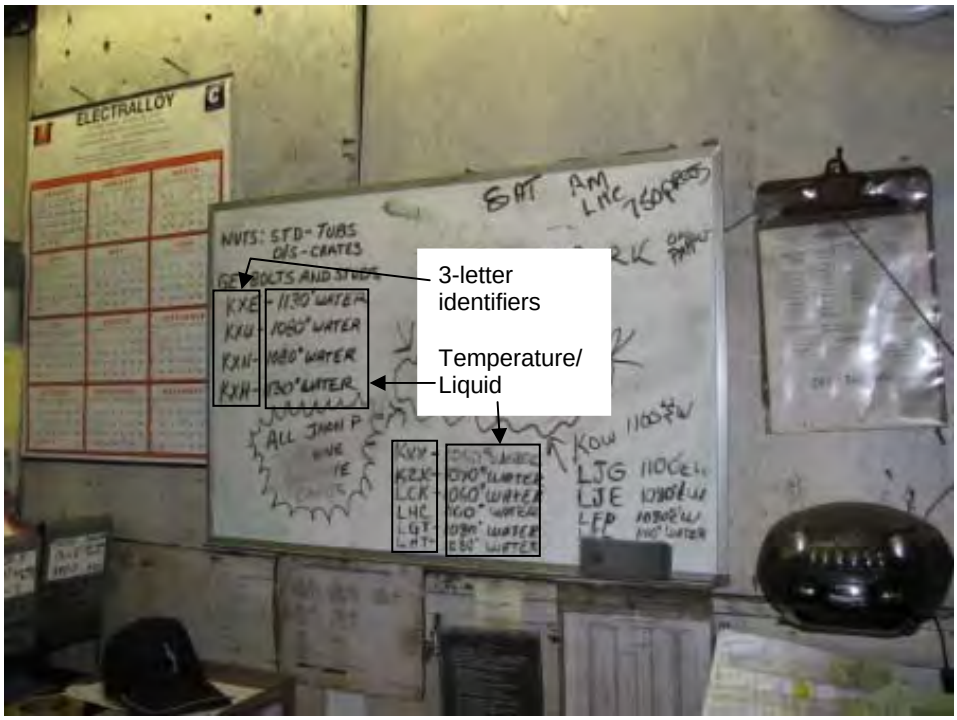

Picture 15. Dyson Company heat treatment tracking board shows 3-letter job codes and temperatures/liquids for heat treatment.

Picture 16. Dyson Company “go/no-go” gauges hang in the inspection office.

Picture 17. The Dyson Company optical comparometer displays bolt profiles for measurement.

Picture 18. Dyson Company wet magnetic particle testing (MT) equipment, including black light, is primarily to spot-check bent-rod elbows for cracks.

Picture 19. The Dyson Company Skidmore rocap testing machine may soon be replaced by a computerized, automated version.

Picture 20a. The Dyson Company lubricates most nuts by dipping them into a bath.

Picture 20b. Dyson's lubricant bath consists of an industry standard base fluid produced by Castrol, combined with admixtures.

Picture 21. Labels and packing lists appear on boxes in the Dyson Company shipping area.

July 23, 2007

PROJECT INFORMATION

04-0120F4
Self Anchored Suspension Bridge

SUBJECT

Office of Structural Materials (OSM) Audit of Art Galvanizing Works.

OVERVIEW

Art Galvanizing Works, in Cleveland, Ohio, a subcontractor for the Dyson Company, successfully completed the Material Fabrication Self-Qualification Audit (MFSQA) on June 12, 2007, per Special Provisions section 8-4.01.

The Department audited Art Galvanizing Works facilities on July 11, 2007. Present during the audit were representatives of OSM: Mr. John Kinsey, CALTRANS Senior Level III, and Mr. Markian Petrina, Structural Materials Representative; and representatives of American Bridge/Fluor, a Joint Venture (ABF): Mr. Dan Radu, ABF Steel Fabrication Manager and Mr. Charles Kanipicki, P.E., ABF Quality Control Manager. Representing the fabricator was Ms. Adrienne Klein, Vice President of Art Galvanizing Works.

DISCUSSION

The audit opened with opening remarks by Mr. Kinsey, who explained the function of OSM and the purpose of the audit. Ms. Klein then gave a brief history of the company.

Art Galvanizing Works (Picture 1) is a small family-owned company that performs hot-dip galvanizing. Art has been active in the Cleveland area for over 50 years; many employees have over 20 years of service with the company, and the night foreman has been with Art for 51 years. Ms. Klein, the Vice President, acts as both the production manager and the quality control (QC) manager, and is also the daughter of the owner.

Art's main work is small items for the electrical and fastening industries, as well as freight trailer latches. Structural galvanizing is limited to 15 feet in length due to kettle length, although Ms. Klein indicated that double-dipping is possible. Dyson apparently intends to send A 325M bolts and shorter rods to this facility.

There is no QC department as such; according to Ms. Klein, all production employees are trained to inspect galvanizing. Ms. Klein stated that galvanized material is randomly tested.

Ms. Klein indicated that products with excessive galvanizing are stripped and re-coated. Mr. Kinsey pointed out that the SAS contract prohibits this; Ms. Klein replied that in the case of overcoating, new components would have to be dipped.

Art has the ability to centrifuge components up to 3 feet long; anything longer than 3 feet is brushed with a natural-bristle brush while the galvanizing is hot, then allowed to air-dry. For galvanizing A 354 BD rods, Art does not have blasting capability. Any material for blasting must be sent to another facility, and Ms. Klein was apprised of the strict time limits and inspection criteria for such blast-and-dip operations.

OSM auditors were told that no standard written procedure exists for galvanizing. In general, a 2 to 5 minute galvanizing bath is usually considered sufficient, and according to Ms. Klein is often a matter of instinct on the part of the operators. In the event of large lots with stringent requirements, Art may perform trial coatings with small numbers of product to perfect procedures.

Ms. Klein discussed some of her QC procedures. She indicated that she calibrates the galvanizing thickness gage once per day, but that this is not recorded. She also showed auditors "Hold" slips for material that required additional attention or had unsatisfactory coating.

The auditors took a tour of The Art facilities. Auditors were asked to get permission to take pictures, as Ms. Klein stated that she was protecting trade secrets, in particular the centrifuging process. The following areas were seen:

- Shipping/Receiving
- Galvanizing
- Shipping Storage Area

Receiving

Inbound material appeared to be reasonably well segregated and traceability appeared adequate.

Galvanizing (Pictures 2-4)

OSM auditors viewed the galvanizing process, contained in a single bay at the rear of the Art facility. The acid bath (Picture 2) and buckets for hot-dip galvanizing (Picture 3) were in close proximity to each other and the molten zinc bath.

Although it had been indicated that galvanizing operators followed approximate time guidelines for duration in the galvanizing bath, no clock was visible from the hot-dipping station (Picture 4). When questioned about this, Ms. Klein stated that timing was a matter of adding additional baskets.

Apparently, the rationale is that another basket or two requires additional handling time, which causes an increase in the amount of time that each basket spends submerged in the zinc bath. However, Ms. Klein was not forthcoming when it was asked how galvanizing operators judge the actual time.

The hot-dipping process was observed for several baskets of components. The procedure appears to function purely by "seat of the pants" judgment by galvanizing operators, who follow the "first in, first out" method when dipping multiple buckets into the zinc bath. Following water quenching, components are placed in a bin. While OSM auditors were present, it appeared that components, which were cylinders with rounded ends weighing several pounds each, were dumped into the bins without any particular care being taken to prevent damage to the zinc coating.

Mr. Kinsey asked Ms. Klein about the thickness readings for components that had completed the galvanizing process. Ms. Klein went into the production office behind the hot-dip station and retrieved the thickness meter. She found numerous instances of inadequate thickness. Until Mr. Kinsey's inquiry, none of the production personnel were observed measuring thickness.

When galvanizing was completed on a second batch of components from the same lot, they were found to have adequate coating thickness. However, before these newly-dipped, acceptable components were even measured, they were placed in the same bin as the insufficiently-coated components.

There was no move by Ms. Klein or production personnel to segregate the non-conforming material. No "Hold" tag was placed in the bin containing the parts with insufficient galvanizing thickness.

Shipping Area

Outbound material was clearly identified and tagged. However, QC control for material suitability appears virtually nonexistent.

Components similar to those recently viewed in the galvanizing area were found in the bin marked "OK to ship." Mr. Kinsey inquired about the coating thickness; Ms. Klein indicated that these had not yet been tested for coating thickness, and stated that she had to return to the production area to retrieve her coating thickness gauge.

After an unexpectedly long absence, Ms. Klein returned and measured the components. The thickness readings were approximately 3 times higher than for those recently observed on the galvanizing line. Ms. Klein explained that there was no maximum limit for these components.

There did not appear to be any procedure in place for visual inspection or repair of non-compliant coatings. It was noted that several pieces marked as ready to ship had minor

blemishes that should have been corrected. No holding area for nonconforming material was observed, contrary to what was expected from previous Art representations.

Outbrief
Mr. Kinsey indicated to Ms. Klein that although Art Galvanizing Works appears capable of performing the hot-dip zinc coating as required, the apparent absence of QC would be noted on the audit. The fact that production schedule overrode quality control principles was a major shortfall, namely that low-coating thickness items were not segregated from acceptable items because Ms. Klein told auditors that the material needed to be kept moving for schedule purposes. It was also noted that uninspected material had been marked "OK to ship."

In order for Art to be recommended for acceptance, Mr. Kinsey indicated that third-party QC would have to oversee operations and inspections. Ms. Klein indicated that she was accustomed to third-party inspections through experience with the Pennsylvania and New York Departments of Transportation.

FINDING
Art Galvanizing Works does not have necessary quality control. The company's Vice President, who is the owner's daughter, primarily oversees production but is also the sole quality inspector; auditors observed an instance when production overrode quality control.

OBSERVATIONS
- The Dyson Company appears not to have provided guidance and auditing as required by contract documents.
- Art Galvanizing was not familiar with contract requirements prohibiting stripping and re-dipping.
- Art Galvanizing has no blasting facilities for ASTM A 354 BD components and appears to have limited resources to properly evaluate blast finish prior to galvanizing.
- Despite assurances that all personnel are trained in quality and measure galvanizing thickness, only the Vice President was observed measuring thickness of galvanized material and the only apparent gage was maintained in an office.
- Newly-galvanized components weighing several pounds each were dumped into a bin without apparent concern for protecting zinc coating.
- Material with acceptable galvanizing thickness was placed in the same container as material with known insufficient galvanizing thickness.
- OSM auditors were told that production schedule can override QC concerns, here in the context of not segregating compliant from non-compliant materials of different hot-dip batches from the same lot.
- Material that the Vice President indicated had not yet been inspected was marked "OK to ship" and apparently awaiting pickup by the customer.

CONCLUSION

OSM recommends that Art Galvanizing Works should be considered a **Contingent Pass.** To receive a passing grade, Dyson Company and Art must ensure that independent third-party quality control for processing, handling, and coating measurement, is in place for all galvanizing performed for the SAS project.

Art Galvanizing Works appears capable of performing small-volume galvanizing of fasteners and small rods to an acceptable level of quality, provided the above controls are instituted.

Venkatesh S. Iyer, Ph.D., P.E.
Structural Materials Representative
Division of Engineering Services
Materials, Engineering and Testing Services
Office of Structural Materials

ILLUSTRATIONS (Pictures 1-4)

Picture 1. Art Galvanizing Works, the Dyson Company's primary small-component galvanizer, is located in Cleveland, Ohio.

Picture 2. The acid pickling bath at Art Galvanizing Works can accommodate components up to 15 feet long.

Picture 3. Components are usually small, and hot-dipped in the buckets shown, up to 3 buckets at once.

Picture 4. Hot dip galvanizing at Art Galvanizing Works is nominally time-controlled, but no clock is visible from the galvanizing line.

REQUEST FOR INFORMATION (RFI)

Run Date: 3/18/13 10:27

RFI No: ABF-RFI-000846R00 **Submitted By:** Mackey, Kim **Pages:** 2

Rev: 0 **Pages Attached:** 1

RFI Dated: 02-Aug-2007 **Contact Name:** Kanapicki, Charles **Phone No.:** (510) 808-4600

Subject: Stork-Herron MFSQA Audit	
References:	
Sub/Supplier: DYS	**Sub RFI#:**
Response Required by: 10-Aug-2007	**Response affects critical path activity?**

Description:

The Department's audit report of Stork-Herron Testing Laboratory, a subcontractor to The Dyson Corporation, gave Stork-Herron a contingent pass. It is our understanding that the Department's audit team did not have any issues with Stork-Herron's mechanical testing capabilities and that the contingency has to do with Stork-Herron's NDT program. As such, will the Department allow Stork-Herron to perform mechanical testing only for The Dyson Corporation prior to Stork-Herron submitting and the Department accepting the required NDT documentation?

Contractor Disposition:

This RFI is being submitted for:

The Cost and Time Impact from this RFI is:

Response: **Agreed Ext. Due Date:**

Pages: 1

Pages Attached: 0

The Contractor is correct in his understanding; the Contingent Pass given to Stork-Herron Testing Laboratory was solely due to their NDT procedure. Therefore, Stork-Herron may perform mechanical testing prior to the Department's acceptance of the required NDT documentation.

The facility was audited as a whole. Consequently, because the NDT did not pass, The Department could not give the entire facility a pass.

Administrative Action:

This response resolve the RFI. No further action required

Dated: 03-Aug-2007	**Respondent:** Rizzardo, Gina	**Phone No.:**

February 12, 2008

PROJECT INFORMATION

04-0120F4 - SFOBB Self Anchored Suspension (SAS) Bridge

SUBJECT

Department Audit of the TC Industries (TCI) Inc., Crystal Lake, IL, a heat treating subcontractor to The Dyson Corporation, who will provide special bolts, nuts, anchor rods and anchor bolts for bid items 45, 50, 52, 54, 56, 57, 60, 61, 66, 82 and 85.

OVERVIEW

The Dyson Corporation intends to manufacture long (more than 9 m) anchor rods for PWS cable system. For these long anchor rods, they would not be able to perform heat treatment within their facility. Therefore, they intend to use TCI as a sub to perform the heat treatment. TCI successfully completed the Manufacturing and Fabrication Self Qualification Audit (MFSQA) per Special Provisions, Section 8-4.01. The ABF-SUB-000183 was approved on July 09, 2007. Office of Structural Materials (OSM) scheduled a department audit of TCI facility in Crystal Lake, IL on January 25, 2008. The audit team included Mr. Ryan Smith P.E. and Mr. Jinesh Mehta P.E.

On the day of the audit, the audit team visited the TCI facility and met with Mr. Bill Weber (Division Manager, TCI), Mr. Pat Pipitone (Sales Manager, TCI), and Mr. Joshua Robach (6 Sigma Black Belt, TCI). Also in attendance from American Bridge/Fluor (ABF), was Mr. Charles Kanapicki (ABF Quality Control Manager (QCM)). It was noted that even though TCI was presented as a sub to Dyson, there was no representation from Dyson at the time of audit.

The overall scope of work was discussed and it was indicated that for this project, scope of TCI is limited to performing batch heat treatment for large anchor rods conforming to the relevant ASTM standards. They would perform testing to confirm hardness of material; however final testing and certification of anchor rods will be performed by Dyson. TCI Inc. has several other capabilities for variety of thermal processing, however with the limited scope, audit was limited to batch heat treatment for large anchor rods.

The audit began with a brief introduction of TCI history, experience and capacity. First established 1881, TCI is involved in several different segments of material processing. TCI's mill product division is performing commercial heat treatment for over 40 years. TCI is an ISO 9001 certified company and also possess A2LA certification for their lab. It was noted that they can perform heat treatment for up to 45' (13.5 m) long components. Thus, TCI is a leading commercial heat treater for large components.

Following the introduction, audit team provided brief information regarding uniqueness and high expectations associated with the SAS project and also briefly explained

Caltrans' process for Quality Assurance. This discussion was followed by a tour of the TCI facility, which was followed by a review of their responses to the MFSQA. An exit meeting was held during the afternoon to discuss the team's audit findings.

AUDIT SUMMARY

The main objective of the Department audit was to evaluate the overall capability of TCI to perform quality heat treating for large anchor rods for bid items 66. Their capability of processing these unique and large structural components was evaluated using the written responses to the MFSQA. Some of the related topics that were discussed with TCI included material control and traceability, in-process verifications, understanding of the material specifications and their quality control programs. The overall objective can be broken down in following segments.

- Their overall capability to perform quality heat treatment for large anchor rods
- Understanding of applicable specifications and maintain traceability
- Quality management system to provide consistent quality

The following summarizes our discussions, comments, and observations during the department audit:

Observations during Facility Tour

Mr. Bill Weber (Division Manager), Mr. Pat Pipitone (Sales Manager), and Mr. Joshua Robach (6 Sigma Black Belt), of TCI led the tour through the facility. In the beginning audit team inquired about the photography and TCI representative showed reservations towards taking pictures of their equipment. They requested not to take pictures of any equipment within their facility. Therefore, appendix includes pictures of their entire heat treatment facility except the operational equipment.

The audit team was first led to the material receiving area (Photograph 1 to 8). It was noted that TCI had very well organized shipping and receiving area. Received material was organized by sizes. Receiving inspection was performed, which even included verification of dimensional tolerances. To maintain proper traceability, in addition to regular tag, heat number were listed with permanent marker on the metal straps on both ends of the bundle. Once the reception inspection is complete material is issued a production order (Photograph 9). Production order is not issued until the reception inspection is clear.

Next, the audit team visited the entire heat treatment process. One of the heat treatment furnaces was in operation. A typical layout of the furnace is illustrated in photograph 10. Temperature compliance of different chambers was verified and was noted within their tolerances. It was also noted that various fixed parameter were posted next to different designated area for operator's benefit (Photographs 11 & 12). Organized and smooth

operations were observed at all equipment stations. It was also noted that strip charts for multiple thermocouples were being plotted.

During the tour, it was noted that there were two different heats being entered in the batch at the same time. One heat contained three bars and the other contained two bars and all five of them were of identical sizes (Photograph 15). The heat numbers were marked with some paint at the ends; however it appeared that marking can easily diminish during the heat treating/quenching process. Additionally, review of furnace report at that time did not show any note regarding location of different heats within the batch (Photograph 16). This raised a serious concern regarding mix-up of two different heats and loss of traceability.

Next the audit team inquired about calibrations of thermocouples. They indicated that they do not calibrate the furnace thermocouples but just perform verification of all furnace thermocouples every two weeks, using master thermocouples. Thermocouples are replaced when they deviate plus or minus ten degrees. However, this procedure was not documented and review of their work order did not confirm with stated variation. It appeared that it was left to electrician's discretion regarding when to replace the thermocouples. Audit team expressed that a procedure complying with manufacturer's recommendation and corresponding ASTM, for thermocouple calibration and verification, should be developed and enforced.

Upon inquiry it was noted that during any process, when non-conformance is found a non-conformance report is generated. The sales manager contacts the customer regarding the issue and determines whether QC needs to get involved. Based on customer's need necessary testing or modifications are made and finally they are resolved by the sales manager. Thus, QC's involvement in the process was determined and controlled by the sales department. Audit team expressed concern regarding handling of non-conformances by sales instead of quality department. They indicated that majority of their non-conformances are associated with quality of raw material and therefore they are better handled by sales. They also indicated that when non-conforming material is accepted by the customer, an exception note is made on the certification documenting that deviation.

At the end, the audit team visited the QC department and testing laboratory (Photographs 17 to 20). Several hardness testing equipment were available. All the equipment had current calibration stickers (Photograph 20) along with calibration block for hardness tester (Photograph 18). When asked, who signs off on the final report, it was indicated that QC Manager signs the report. However, based on review of typical report (which was forwarded to audit team at a later date), it was noted that the inspector performing the hardness testing is signing off on final inspection report and certificate of compliance (COC). No further review of his work was conducted. This appears to be violation of laboratory accreditation guideline ISO 17025, which requires authorizing person sign off on the report. Also, it is noted that the lack of review of inspector's report might increase chances of error in final report/COC.

Discussions of MFSQA

Following the plant tour, a detailed review of all relevant sections of the MFSQA was conducted in order to discuss and give the TCI representative the opportunity to expand on their written responses. Only the sections of significant concerns are discussed below:

- Section M, questions 14 and 15 asks if the fastener components were tested by a laboratory acknowledged by Caltrans or NIST (which follows ISO/IEC guide 25)? The response marked "NA", however they do perform hardness testing and they do have current A2LA lab accreditation. Therefore, their response to MFSQA was modified to "YES" instead of "NA."
- Under Section N, Material Receiving, it was noted that TCI has a very good and thorough system for material receiving. There is a very good system of multiple identification to avoid any lose in traceability during receiving or storage. This was also verified during the plant tour (Photograph 1 to 8).
- Section N, item 6 asks "Does the manufacturer have a material identification system to assure control of materials of different heats, lots and grade?" In response they marked "YES" and stated they mark heat numbers on bundles and bars. Audit team verified that they had a very good system for stored materials. However, when inquired about assigning lot numbers after each heat treatment batch, they indicated that they do not assign separate lot number after each batch. They assign one lot number to the entire heat of material, irrespective of number of heat treatment batches. They perform testing on the entire heat instead of testing each batch that is heat treated. They indicated that their method is in compliance with corresponding ASTM. However, based on review of material specification (ASTM A 354 section 9.4), it is noted that the a lot should be defined for each batch of heat treatment and testing should be performed accordingly for each lot.
- Section R, question 2 and 6 refers to organization chart, which would reflect commitment to the quality and independence of quality control from production. In the MFSQA TCI had attached an organization chart meeting this requirement. However, this chart was for the entire firm and therefore a facility specific chart was requested for their Mill Product Division (MPD). An organization chart for MPD was submitted at a later date. Based on review of the chart it was noted that the QA manager works for VP of operations. Also, it was noted that during the tour that items like non-conformance reports and furnace thermocouple verifications were primarily handled by other departments. It appeared that QC department works as an ancillary structure and gets involved in the issues only when consulted by production or sales.

SUMMARY OF FINDINGS

Overall, the audit team generally found that TCI has a good material receiving system, lots of experience and credentials; however during heat treatment processing the process of lot identification does not comply with ASTM requirements. Overall facility has

capability to perform heat treatment on large anchor rods; however there are Items of Concerns, as noted below, should be addressed before any of the project work is performed by TCI.

Items of Concern:

Lot Identification and Traceability – TCI should define lot as batch that is heat treated as required by ASTM A 354 and perform sampling and testing in accordance with those lots instead of heat lots. Additionally, TCI should take extra precaution to make sure that when two different heats are heat treated in the same batch, permanent identifications are made to avoid any mix-up in different heats. A procedure for such scenario should be documented and enforced.

Calibration of Thermocouples: For furnace thermocouple calibration and verification, a procedure complying with manufacturer's recommendation and corresponding ASTM tolerances, should be developed and enforced.

Certificate of Compliance: Even though it was stated that QC Manager signs off the final certificate, it was noted that final Certificate of Compliance was signed off by the inspector performing the testing on the material. TCI should clarify their standard practice and make sure that test results are reviewed and signed off by authorizing personnel, as stated during the audit.

Lack of Involvement of Quality Control: It was noted that involvement of quality department lacked in various quality functions like handling of non-conformances, verification of equipment etc. This poses a concern that a problem might remain undetected due to lack of review or involvement from quality. TCI shall address the Department's concern and submit it in writing for the Department's review.

Findings:

No findings were noted during the audit.

CONCLUSION

The audit team concluded the following:

- **Heat Treatment Capability:** TCI generally demonstrated to the audit team that they have the experience, engineering support, and equipment capacity to perform quality large component batch heat treatment for anchor rods for the project.
- **Sense of Commitment to Quality:** During the visit the audit team sensed the company has a strong commitment to produce a quality product. Company showed a quality conscious attitude, and maintains various quality certifications to support their practice. However, certain practices did not comply with the corresponding specifications or standards.

- **Management Team:** TCI management team has tremendous experience in the heat treatment however needs some changes in their system to comply with corresponding standards and maintain quality standards.

RECOMMENDATION

Based on the Department audit of TCI facility, OSM recommends TCI receive a Contingent Pass, the above mentioned item of concerns should be addressed via ABF and submitted to Caltrans for review and approval.

During the closing meeting, TCI acknowledged some of these concerns and showed willingness to work on the items of concerns.

If you have any questions, please call Mazen Wahbeh, Structure Materials Representative at (818) 292-0659, or Keith Hoffman at (510) 450-7765.

Signature on file

MAZEN WAHBEH, Ph.D., P.E.
Structural Materials Representative
Division of Engineering Services
Materials, Engineering and Testing Services
Office of Structural Materials

cc: Dan Speer, Keith Hoffman

APPENDIX A – PHOTOS

Photograph 1: Well organized shipping and receiving area

Photograph 2: Well stacked bundles of materials with proper IDs

Photograph 3: Proper stacking of materials to avoid any damage

Photograph 4: Tags were well secured and identifiable for all the materials

Photograph 5: Well organized materials as per sizes

Photograph 6: Proper labeling of materials

Photograph 7: Heat numbers marked on metals straps of each bundle

Photograph 8: Materials stored inside, waiting to be processed

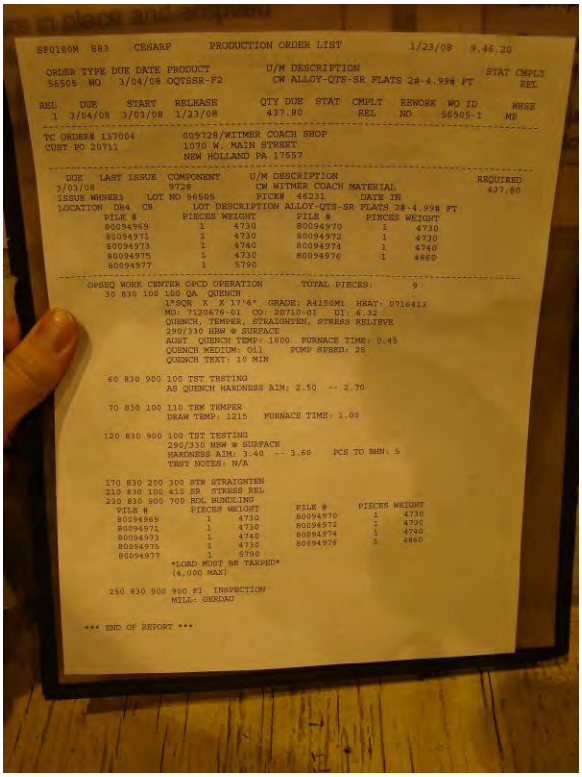

SF0180M 883 CESARF PRODUCTION ORDER LIST 1/23/08 9.46.20

ORDER	TYPE	DUE DATE	PRODUCT	U/M DESCRIPTION	STAT	CMPLT REL
56505	WO	3/04/08	OQTSSR-F2	CW ALLOY-QTS-SR FLATS 2#-4.99# FT		

REL	DUE	START	RELEASE	QTY DUE	STAT	CMPLT	REWORK	WO ID	WHSE
1	3/04/08	3/03/08	1/23/08	437.80		REL	NO	56505-1	MP

TC ORDER# 137004
CUST PO 20711

009728/WITMER COACH SHOP
1070 W. MAIN STREET
NEW HOLLAND PA 17557

DUE	LAST ISSUE	COMPONENT	U/M DESCRIPTION	REQUIRED
3/03/08		9728	CW WITMER COACH MATERIAL	437.80

ISSUE WHSE#3 LOT NO 56505 PICK# 46231 DATE IN
LOCATION DR4 C8 LOT DESCRIPTION ALLOY-QTS-SR FLATS 2#-4.99# FT

PILK #	PIECES	WEIGHT	PILK #	PIECES	WEIGHT
80094969	1	4730	80094970	1	4730
80094971	1	4730	80094972	1	4730
80094973	1	4740	80094974	1	4740
80094975	1	4730	80094976	1	4860
80094977	1	5790			

OPSEQ WORK CENTER OPCD OPERATION TOTAL PIECES: 9

30 830 100 100 QA QUENCH
1"SQR X X 17'6" GRADE: A4150M1 HEAT: 0716413
MO: 7120676-01 CO: 20710-01 DI: 6.32
QUENCH, TEMPER, STRAIGHTEN, STRESS RELIEVE
290/330 HBW @ SURFACE
AUST QUENCH TEMP: 1600 FURNACE TIME: 0.45
QUENCH MEDIUM: Oil PUMP SPEED: 25
QUENCH TEXT: 10 MIN

60 830 900 100 TST TESTING
A5 QUENCH HARDNESS AIM; 2.50 -- 2.70

70 830 100 110 TEM TEMPER
DRAW TEMP: 1215 FURNACE TIME: 1.00

120 830 900 100 TST TESTING
290/330 HBW @ SURFACE
HARDNESS AIM: 3.40 -- 3.60 PCS TO BEN: 5
TEST NOTES: N/A

170 830 200 300 STR STRAIGHTEN
210 830 100 410 SR STRESS REL
230 830 900 700 BDL BUNDLING

PILK #	PIECES	WEIGHT	PILK #	PIECES	WEIGHT
80094969	1	4732	80094970	1	4730
80094971	1	4730	80094972	1	4730
80094973	1	4740	80094974	1	4740
80094975	1	4730	80094976	1	4860
80094977	1	5790			

LOAD MUST BE TARPED
(4,000 MAX)

250 830 900 900 FI INSPECTION
MILL: GERDAU

*** END OF REPORT ***

Photograph 9: Typical production order, listing all the steps of processing

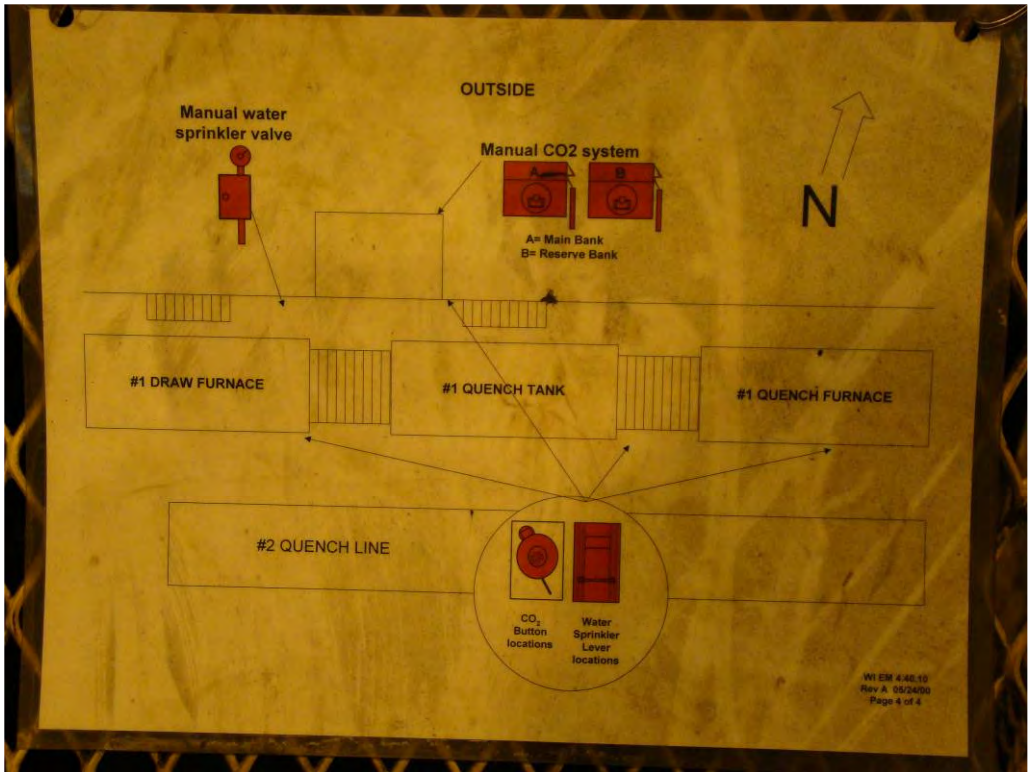

Photograph 10: Layout of a heat treatment furnace

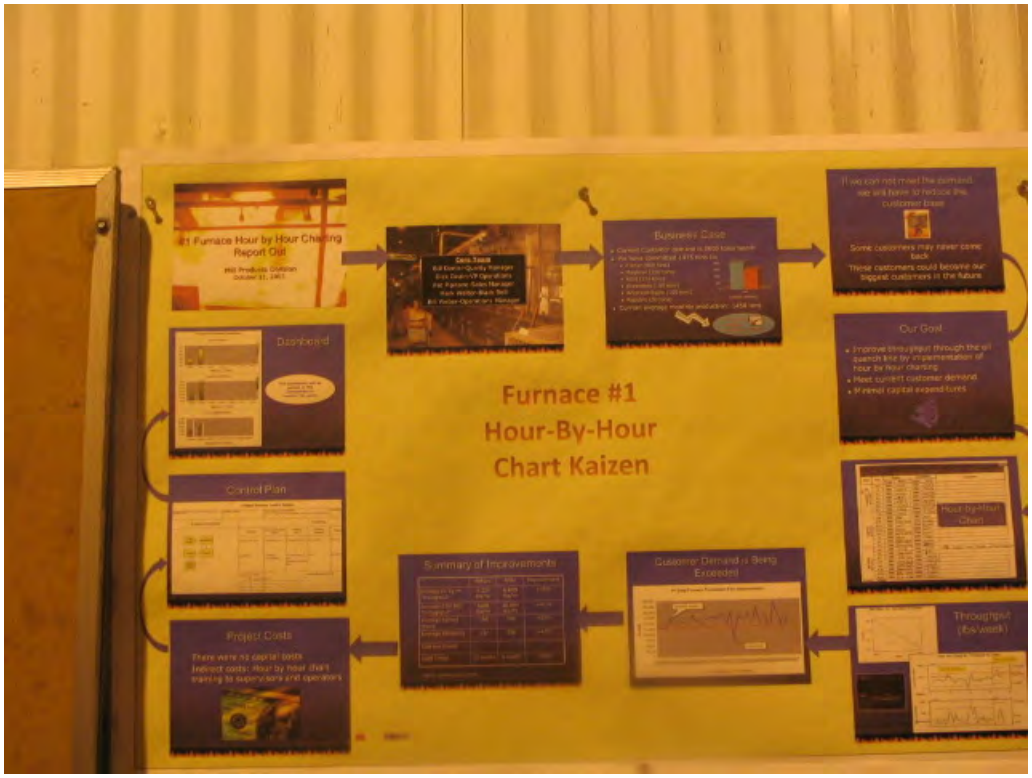

Photograph 11: Processing char for furnace no. 1

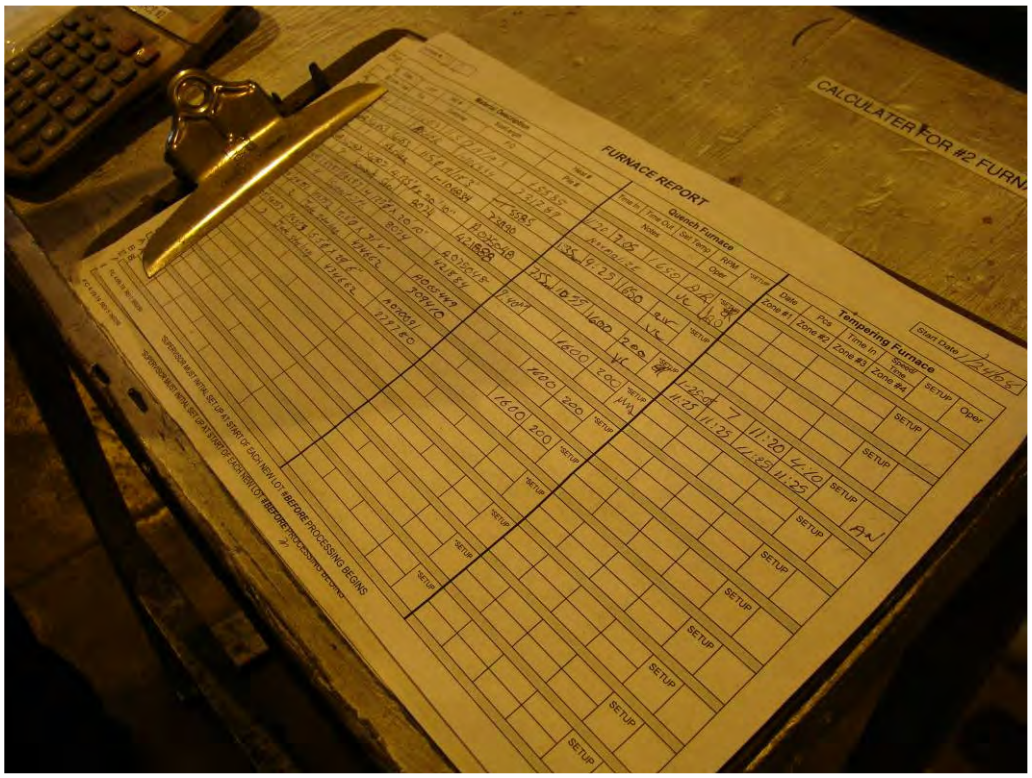

Photograph 12: Operator's furnace report, documenting various parameters

Photograph 13: Quench oil tank parameters posted

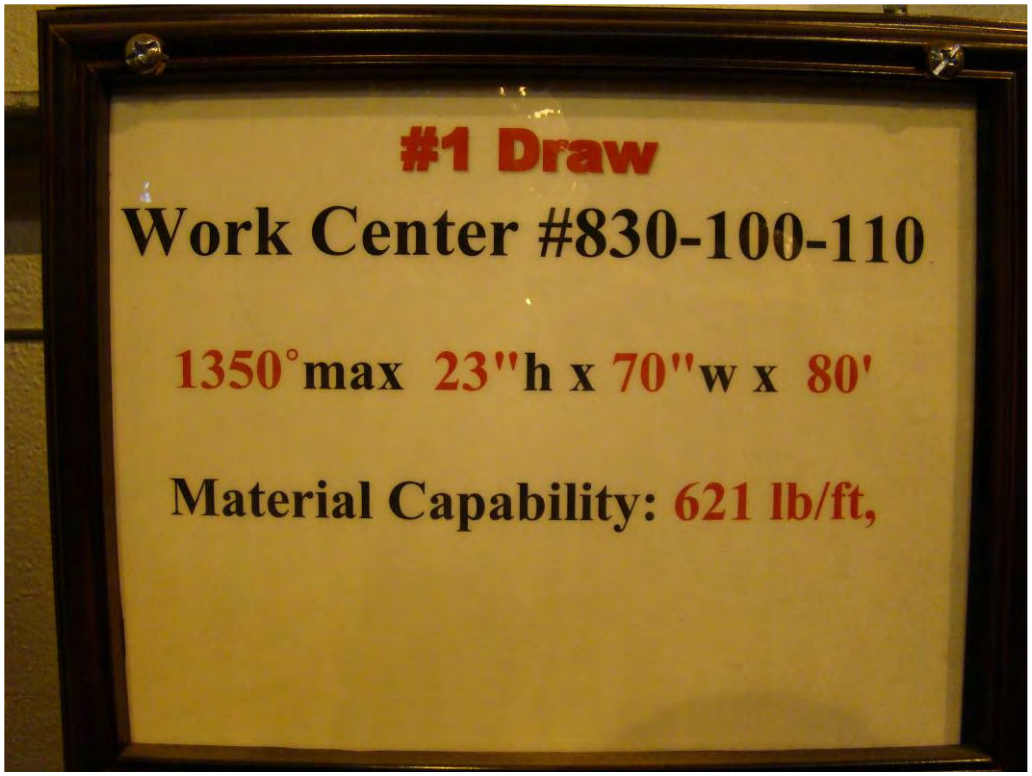

Photograph 14: Posted parameters for #1 draw

Photograph 15: Two different heats (identical sizes) being processed in single batch, without proper permanent marking

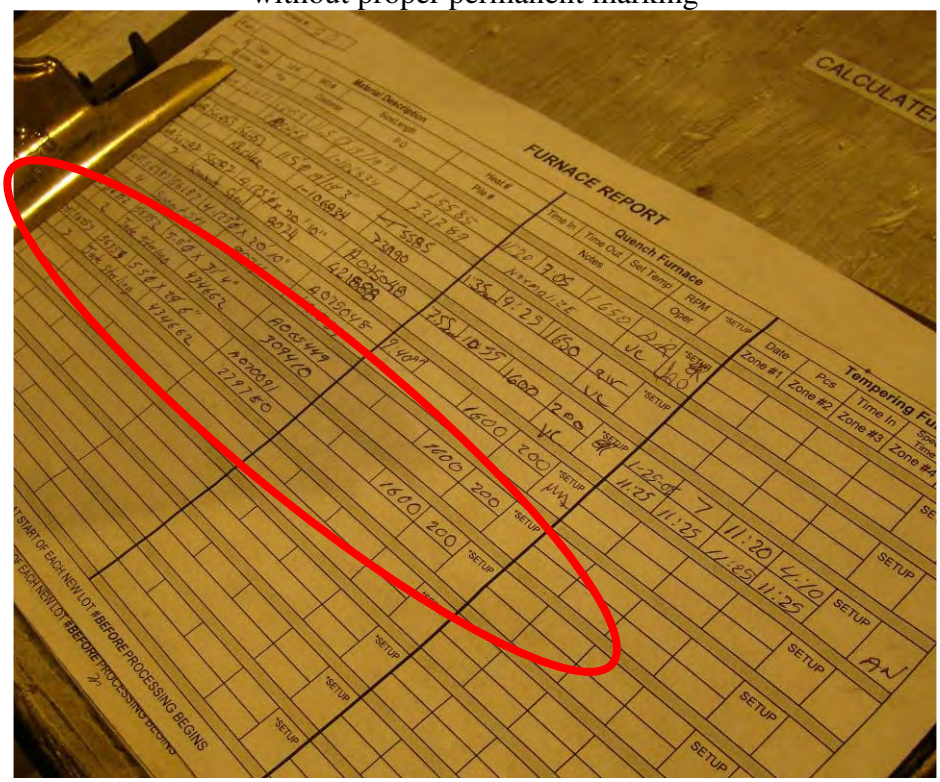

Photograph 16: Furnace report, when inquiry about above heats was made (Did not show position of two heats placed in the same batch)

Photograph 17: Digital hardness tester

Photograph 18: Standard blocks for hardness tester verification

Photograph 19: Hardness tester

Photograph 20: Calibration sticker showing current calibration

June 2, 2008

PROJECT INFORMATION

04-0120F4
Self Anchored Suspension Bridge

SUBJECT

The Office of Structural Materials (OSM) audit of Bob Monnig Industries (BMI), galvanizing facilities based on the Manufacturing and Fabrication Self Qualification Audit (MFSQA) dated April 17, 2008.

OVERVIEW

Bob Monnig Industries, in Glasgow, Missouri, a subcontractor for the Dyson Corporation, successfully completed the Material Fabrication Self-Qualification Audit (MFSQA) on April 17, 2008. The Office of Structural Materials (OSM) performed a Department audit at Bob Monnig Industries facilities in Glasgow, Missouri, on May 21, 2008. The audit also included Phoenix Industries, the on-site blasting subcontractor to Bob Monnig Industries. The OSM audit team included Structural Material Representatives (SMR) Dr. Venkatesh Iyer and Mr. Gary Thomas.

On May 21, 2008, the audit team visited the Monnig facilities and met with Mr. John Monnig, Owner and President; Mr. Jason Monnig, Quality Control Coordinator; and Mr. Ronald Wise, Quality Control Manager. Mr. Charles Kanipicki, P.E., Quality Control Manager from American Bridge/Flour, a Joint Venture (ABF) was also present during the audit.

The overall scope of work to be provided by Monnig Industries and Phoenix Industries was discussed. Monnig Industries is to perform hot-dip galvanizing of 3” diameter threaded anchor rods in lengths of 17’- 2” and 10’- 0” for the Dyson Corporation. Phoenix Industries will be sub-contracted to perform dry-grit blasting services prior to hot-dip galvanizing.

AUDIT SUMMARY

The main objective of the Department audit was to evaluate Bob Monnig Industries’ overall capabilities to hot-dip galvanize threaded anchor rods for the Self-Anchored Suspension (SAS) Bridge, and to verify the accuracy of the responses provided in the MFSQA.

Mr. John Monnig stated at the onset of the audit that Bob Monnig industries would provide all the QC inspections and documentation for the work performed by Phoenix Industries. The material will be in the control of Bob Monnig Industries, with Phoenix Industries providing only the equipment and personnel required for the dry-grit blasting operations.

Discussion of MFSQA

All sections of the completed MFSQA were reviewed with Bob Monnig Industries during the audit, and Bob Monnig Industries was given the opportunity to expand on their written responses. Only those sections of the MFSQA with significant discussion are addressed below:

Section A, Item 3. Monnig Industries will obtain a copy of ASTM E376 and retain on file. Pursuant to the Contract Special Provisions, fabricator will obtain and posses the latest copy of all applicable specification references.

Section E, Item 2. Certificate of Compliance from Zinc supplier will reflect conformity with ASTM B6. This requirement is referenced in ASTM 153.

Section P, Item 2. Monnig Industries quality control form will be revised to better identify the material throughout the process and document the galvanizing surface thickness. This form shall include heat numbers for traceability and galvanizing surface thickness with minimum and maximum limits as required in the contract.

Monnig industries will address process and procedures to test kettles for zinc composition in the Monnig Industries work plan.

Quality control measures shall address maintaining calibration records and written procedures to document these records.

Section R, Item 3c. Monnig Industries will address parameters for environmental concerns during blasting operation. These parameters include humidity, temperature and other environmental conditions that may affect the dry-grit blasting operation. These concerns and appropriate actions will be addressed in Monnig Industries work plan.

Section R, Item 3d. Adhering test results will be documented on the appropriate quality control form.

Observations during Facility Tour

The OSM Audit Team observed the following processes and conversations during the audit tour at Monnig Industries.

Mr. John Monnig conducted the tour of the Monnig Industries facilities; Mr. Jason Monnig provided the OSM audit team a diagram layout of Monnig Industries. The diagram was useful for identifying the different operations throughout the facility.

The entire facility is owned by Mr. John Monnig, which includes six large industrial units that are primarily used for galvanizing operations. Mr. Monnig also sub-leases space to Phoenix Industries in Unit 5 which is performing the blasting operation for the anchor rods on this contract.

The anchor rods will be shipped from the Dyson Corporation to the Monnig facility where it will be inspected by Monnig Industries QC personnel and stored in Unit 5. If the anchor rods are acceptable they will receive a Monnig Industries green identification tag, which indicates they were inspected and are approved to proceed to the next stage of galvanizing. Damaged anchor rods will receive a red identification tag. Red-tagged material is considered rejected and is not

allowed to proceed to the next stage of galvanizing; a non-conformance report will be written and the rejected anchor rods will be placed in a designated quarantine area.

Green-tagged anchor rods will be stored in Unit 5, where they will be dry-grit blasted. Unit 5 is an enclosed shop; however, limited environmental quality controls were noted during the tour. Additional controls would address contingency plans in the event of adverse weather conditions not conducive to dry-grit blasting.

Upon successful completion of the blasting operation by Phoenix Industries and inspection by Monnig Industries, the material will be transported to Unit 2 for the pre-flux process. The anchor rods will be transported by forklift using skids, hoists, and gantry cranes throughout the galvanizing process. Upon completion of the pre-flux process, the anchor rods will be submerged in one of three hot dip galvanizing kettles: two of the kettles are 25 feet long and the third is 32 feet long. The raw zinc material used for galvanizing is stored in Unit 3. Monnig Industries purchases the raw zinc material (Western Prime Grade) from Horsehead Corporation in Monaca, Pennsylvania.

During the morning audit meeting and during several stages of the tour, Monnig Industries was reminded that acid-pickling of the anchor rods is not permitted for this contract. Jason Monnig advised the OSM audit team that all personnel working on this project will be trained on the contract requirements as referenced in the Monnig work plans.

The contract provides a 4-hour time limit from blasting to initiation of hot-dip galvanizing. During the audit tour, Phoenix Industry and Monnig Industries workers were noted performing a dry run to resolve any issues prior to actual production. The SMR encouraged Mr. John Monnig to use a high grade of steel when performing the blasting dry run to better simulate the properties of the A354 BD rods.

Immediately after galvanizing the rods, QC personnel will brush the threads of the rods. The galvanized rods will be placed on racks adjacent to the galvanizing pits where QC personnel will check and record the galvanizing thickness, run a nut down the threaded portion of the rod, verify that lot identification is maintained, and perform an overall visual inspection of the final product. Conforming material will be identified by a QC tag and moved to Unit 2 or 3, where it will be stored until a Caltrans QA inspection. Following a successful QA inspection, the material will be released for shipment to the jobsite with Caltrans orange tags.

It should also be noted that Monnig Industries operates a mechanical galvanizing plant within this facility. The facility appears to be capable of producing galvanized products that meet the standards of the Department.

SUMMARY OF FINDINGS

Overall, the audit team generally found Monnig Industries capable of performing hot-dip galvanizing of threaded anchor rods as required by the contract.

In summary, the facility was able to demonstrate capabilities satisfactory to meet the contract requirements for performing hot-dip galvanizing provided the following Department Items of Concern (I.O.C.) for this facility are addressed:

1. *Documentation.* Pursuant to the requirements of the contract, Monnig Industries shall obtain and possess current copies of applicable specifications and required Certificates of Compliance. Monnig Industries has shown the ability to obtain this paperwork.

2. *Quality Control.* The policies and practices provided in the MFSQA appear to be adequate with some minor exceptions that were noted during the audit. Monnig Industries are aware of these concerns and are currently making revisions to their work plan to incorporate the necessary procedures to address these concerns. Monnig Industries shall incorporate the following in their revised work plan:
    a. Procedures for recording calibration records;
    b. Procedures and actions addressing environmental concerns during blasting operations;
    c. Procedures that will address documenting required QC test results on QC forms.

CONCLUSION

Based on the Office of Structural Materials Department audit of Monnig Industries and Phoenix Industries in Glasgow, Missouri, OSM recommends a **Contingent Pass** audit for hot-dip galvanizing of threaded anchor rods.

If you have any questions, please call Venkatesh Iyer, Structure Material Representative at (858) 967-6363, or Keith Hoffman at (510) 450-7765.

Signature on file

Venkatesh S. Iyer, Ph.D., P.E.
Structural Materials Representative
Division of Engineering Services
Materials, Engineering, and Testing Services

Office of Structural Materials

Photo 1. Automated control dry-grit blaster operated by Phoenix Industries in Unit 5.

Photo 2. Monnig Industries internal identification tags.

Photo 3. Galvanized components stored in the Monnig Industries yard. Material is supported by pallets, skids, and hoists while being transported by forklifts and gantry cranes through the facility.

Photo 4. A gantry crane transports components to the pickling area in one of the galvanizing units.

Photo 5. Components being pre-fluxed prior to hot-dip galvanizing.

Photo 6. Components being hot-dipped
in one of Monnig's three galvanizing kettles.

Photo 7. Components are placed on supports after hot-dip galvanizing.

Photo 8. Mechanical mill thickness gage used by Monnig Industries to measure galvanizing thickness on components.

Photo 9. Raw zinc material, supplied by Horsehead Industries, is stored in Unit 3.

Photo 10. Automated kettle controls.

American Bridge / FLUOR
A JOINT VENTURE

375 Burma Road
Oakland, CA 94607 USA
Phone (510) 808-4600
Fax (510) 808-4601

SAN FRANCISCO OAKLAND BAY BRIDGE
EAST SPAN SEISMIC SAFETY PROJECT

SELF-ANCHORED SUSPENSION BRIDGE
(Superstructure and Tower)

Caltrans Contract No. 04-0120F4
Bridge No. 34-0006L/R
District 04 County SF Route 80 Kilometer Post 13.2 / 13.9

Submittal ABF- SUB-000689R01:
E2 Shear Key Embedded Anchor Rod Assemblies

Baseline Schedule Activity ID: N/A

Prepared By: American Bridge / Fluor Enterprises Inc., A Joint Venture

Date: May 14, 2008
Revision 1

TABLE OF CONTENTS

DESCRIPTION **PAGES**
E2 Shear Key High Strength Rod and Guide Pipe Details (DE 325A, Rev. 1)..... 1
E2 Bearing and Shear Key High Strength Rod and Guide Pipe Details (DE 326A, Rev. 0)..... 1
Spherical Nut and Washer Detail Sheets..... 3

☐ APPROVED
☒ APPROVED AS NOTED
☐ NOT APPROVED

Pursuant to Section 5-1.02
of the Standard Specifications
State of California
DEPARTMENT OF TRANSPORTATION

Signed Ron Matsuyoshi
Structure Representative
Date June 09 – 2008 RM

REGISTERED PROFESSIONAL ENGINEER
KEVIN M. SMITH
No. C 62218
Exp. 9/30/09
CIVIL
STATE OF CALIFORNIA

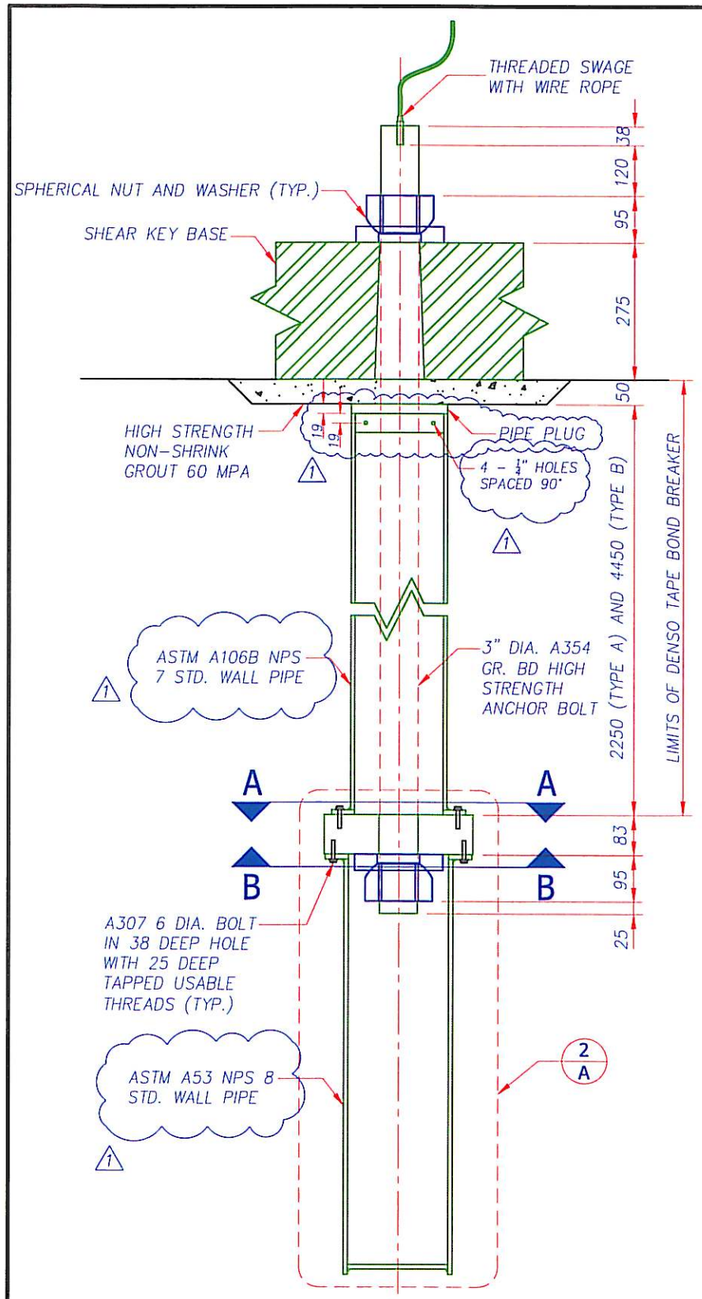

SHEAR KEY ROD ASSEMBLY

1/A TYPE A AND TYPE B

SCALE : 1:12

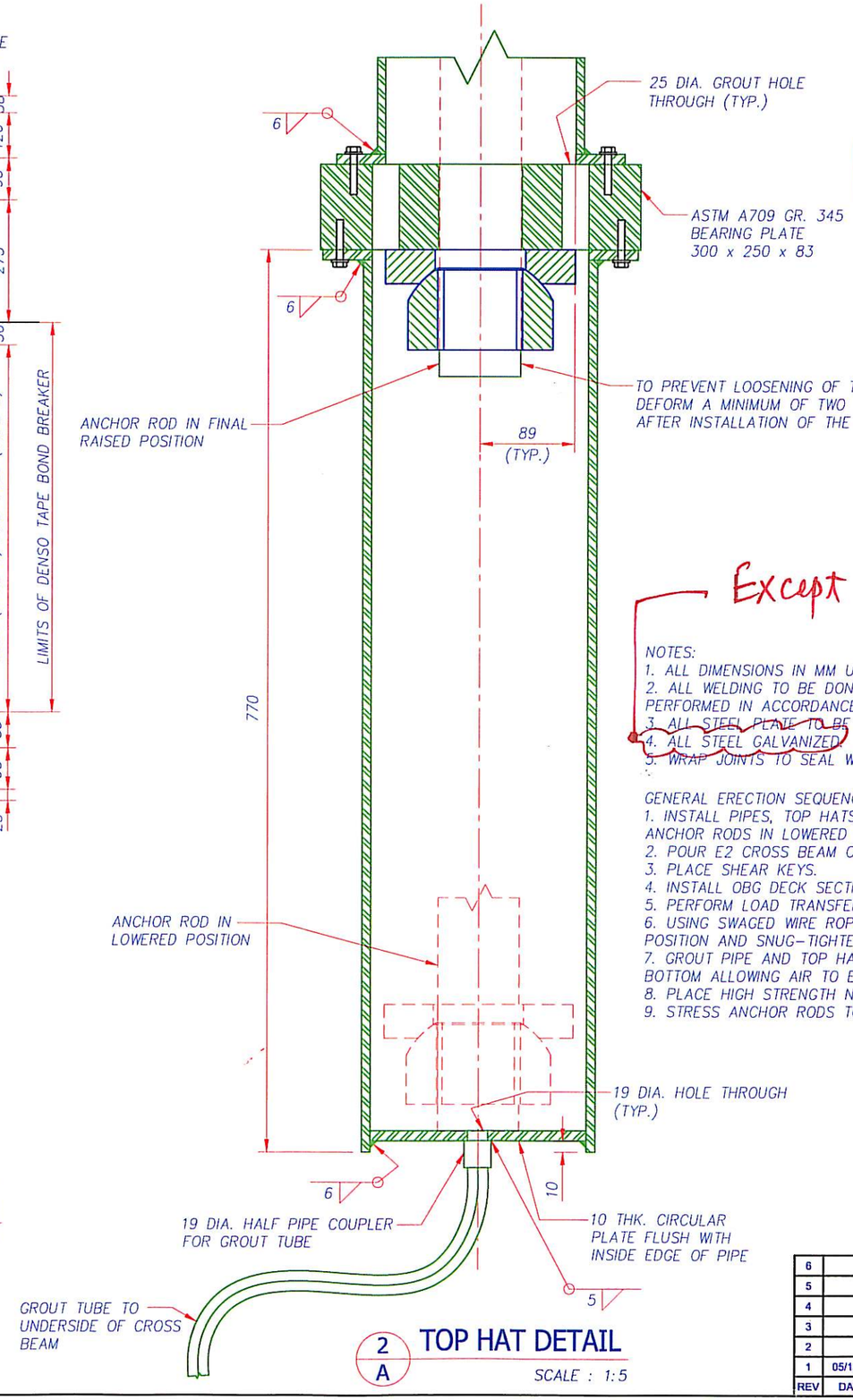

TOP HAT DETAIL

2/A

SCALE : 1:5

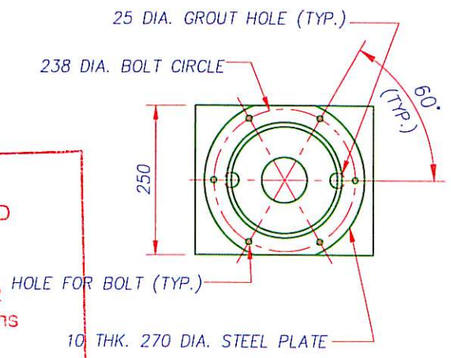

SECTION A-A

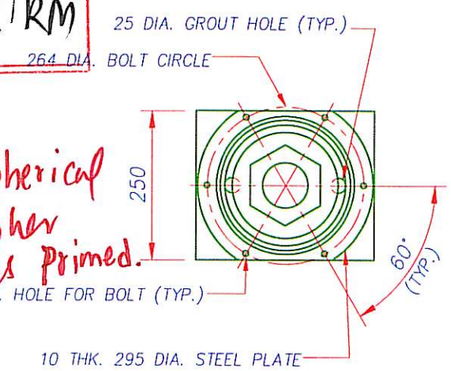

SECTION B-B

☐ APPROVED
☒ APPROVED AS NOTED
☐ NOT APPROVED

Pursuant to Section 5-1.02 of the Standard Specifications State of California DEPARTMENT OF TRANSPORTATION

Signed Ron Matson/for RM
Structure Representative

Date June 09-2008

Except for the A514 Spherical Plate Washer which is primed.

NOTES:
1. ALL DIMENSIONS IN MM UNLESS OTHERWISE NOTED.
2. ALL WELDING TO BE DONE USING E70XX ELECTRODES PERFORMED IN ACCORDANCE WITH AWS D1.1.
3. ~~ALL STEEL PLATE TO BE A36 UNLESS OTHERWISE NOTED.~~
4. ~~ALL STEEL GALVANIZED.~~
5. ~~WRAP JOINTS TO SEAL WITH TWO LAYERS OF DUCT TAPE.~~

GENERAL ERECTION SEQUENCE:
1. INSTALL PIPES, TOP HATS, ANCHOR RODS AND ACCESSORIES WITH ANCHOR RODS IN LOWERED POSITION.
2. POUR E2 CROSS BEAM CONCRETE.
3. PLACE SHEAR KEYS.
4. INSTALL OBG DECK SECTIONS
5. PERFORM LOAD TRANSFER.
6. USING SWAGED WIRE ROPE, LIFT ANCHOR RODS INTO RAISED POSITION AND SNUG-TIGHTEN TOP NUTS.
7. GROUT PIPE AND TOP HAT FOR THE SHEAR KEY RODS FROM THE BOTTOM ALLOWING AIR TO ESCAPE THROUGH THE TOP.
8. PLACE HIGH STRENGTH NON-SHRINK GROUT BENEATH BASE PLATE.
9. STRESS ANCHOR RODS TO 0.7Fu.

REGISTERED PROFESSIONAL ENGINEER KEVIN M. SMITH No. C 62218 Exp. 9/30/09 CIVIL STATE OF CALIFORNIA

REV	DATE	BY	DESCRIPTION
6			
5			
4			
3			
2			
1	05/13/08	ML	MATERIAL GRADE AND PIPE PLUG

STATE OF CALIFORNIA
DEPARTMENT OF TRANSPORTATION
CONTRACT NO. 04-0120F4
BRIDGE NO. 34-0006L/R

DISTRICT	COUNTY	ROUTE	KILOMETER POST
04	SF	80	13.2 / 13.9

SAN FRANCISCO OAKLAND BAY BRIDGE
EAST SPAN SEISMIC SAFETY PROJECT
SELF ANCHORED SUSPENSION BRIDGE
(SUPERSTRUCTURE AND TOWER)

E2 CROSS BEAM
SHEAR KEY
HIGH STRENGTH ROD GUIDE PIPE DETAILS

American Bridge / FLUOR
A JOINT VENTURE

Made By: M. LEWIS Date: 04/28/2008
Checked By: L. GATSOS Date: 04/29/2008
In Charge Of: K. SMITH

Job No. 660110
Sheet No. DE 325 A
Scale:
Revision: 1

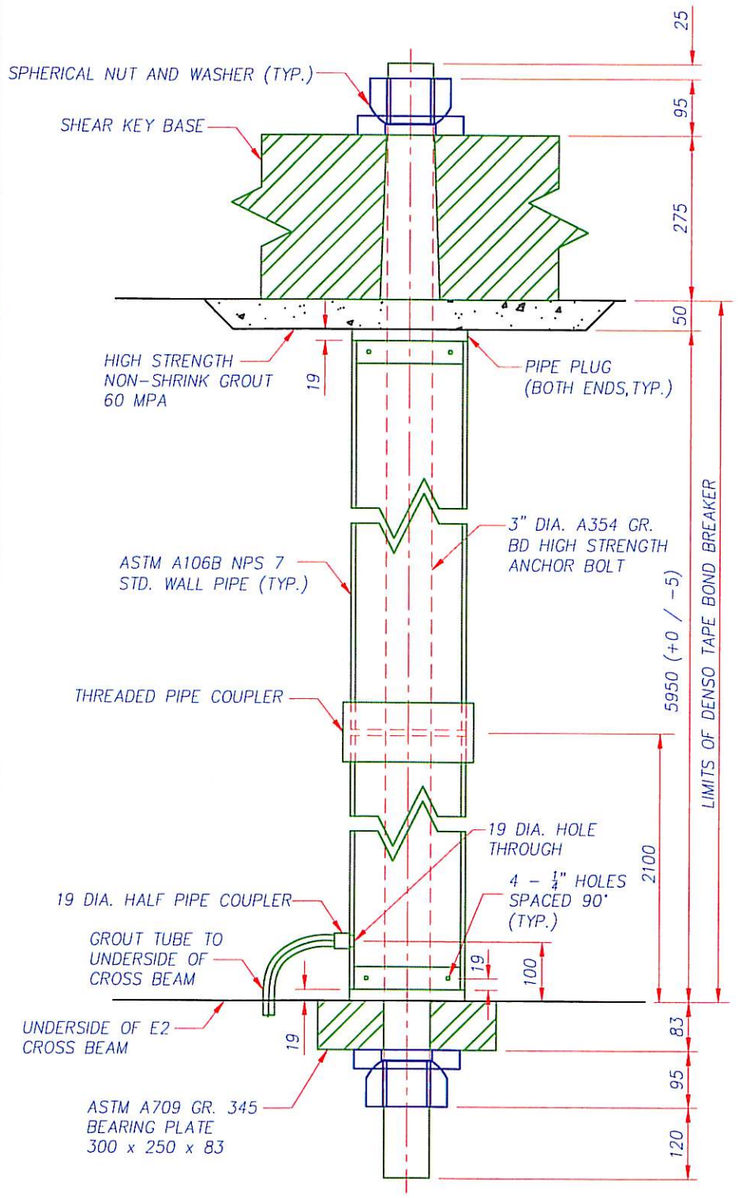

SHEAR KEY ROD ASSEMBLY

1/A

TYPE C

SCALE : 1:10

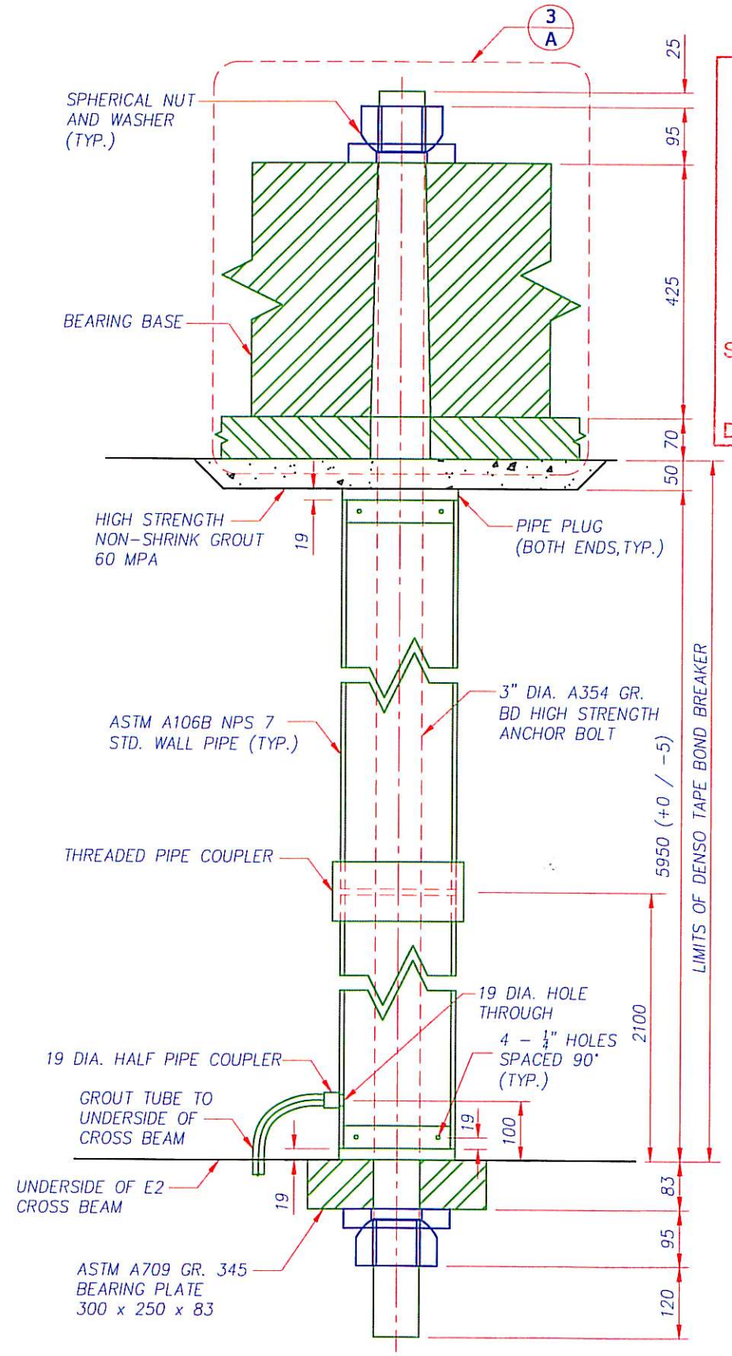

BEARING ROD ASSEMBLY

2/A

SCALE : 1:10

APPROVED

APPROVED AS NOTED

NOT APPROVED

Pursuant to Section 5-1.05 of the Standard Specifications State of California

DEPARTMENT OF TRANSPORTATION

Signed Ron Martinez/RM

Structure Representative

Date June 09-2008

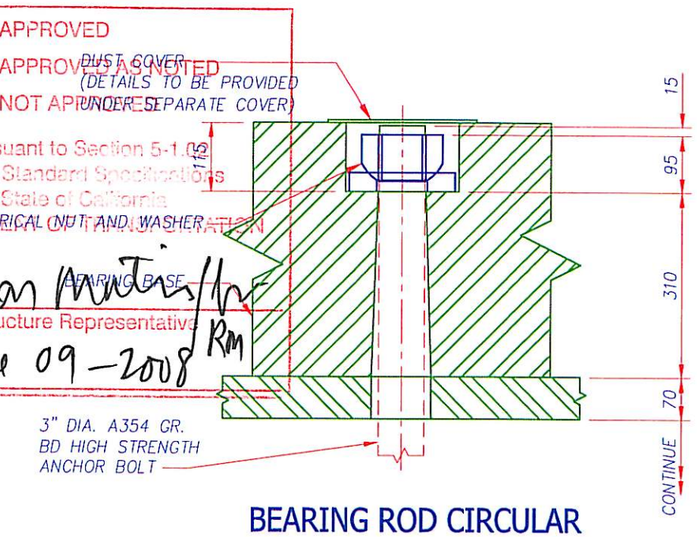

BEARING ROD CIRCULAR RECESS DETAIL

3/A

SCALE : 1:10

GENERAL ERECTION SEQUENCE:
1. INSTALL PIPE.
2. POUR E2 CROSS BEAM CONCRETE.
3. INSTALL BEARING AND SHEAR KEY RODS ON TEMP. FALSEWORK IN RETRACTED POSITION.
4. PLACE BEARINGS AND SHEAR KEYS.
5. INSTALL OBG DECK SECTIONS
6. PERFORM LOAD TRANSFER.
7. LIFT ANCHOR RODS INTO RAISED POSITION AND SNUG-TIGHTEN TOP NUTS.
8. GROUT PIPE FROM THE BOTTOM ALLOWING AIR TO ESCAPE THROUGH THE TOP.
9. PLACE HIGH STRENGTH NON-SHRINK GROUT BENEATH BASE PLATE.
10. STRESS ANCHOR RODS TO 0.7Fu.

NOTES:
1. ALL DIMENSIONS IN MM UNLESS OTHERWISE NOTED.
2. ALL PIPE, ANCHOR RODS, AND ACCESSORIES GALVANIZED.

REV	DATE	BY	DESCRIPTION
6			
5			
4			
3			
2			
1			

REGISTERED PROFESSIONAL ENGINEER KEVIN M. SMITH No. C 62218 Exp. 9/30/09 CIVIL STATE OF CALIFORNIA

STATE OF CALIFORNIA
DEPARTMENT OF TRANSPORTATION
CONTRACT NO. 04-0120F4
BRIDGE NO. 34-0006L/R

DISTRICT	COUNTY	ROUTE	KILOMETER POST
04	SF	80	13.2 / 13.9

SAN FRANCISCO OAKLAND BAY BRIDGE
EAST SPAN SEISMIC SAFETY PROJECT
SELF ANCHORED SUSPENSION BRIDGE
(SUPERSTRUCTURE AND TOWER)

E2 CROSS BEAM
BEARING AND SHEAR KEY ANCHOR RODS
HIGH STRENGTH ROD GUIDE PIPE DETAILS

American Bridge / FLUOR
A JOINT VENTURE

Made By: M. LEWIS Date: 05/13/2008
Checked By: L. GATSOS Date: 05/13/2008
In Charge Of: K. SMITH

Job No. 660110
Sheet No. DE 326 A
Scale:
Revision: 0

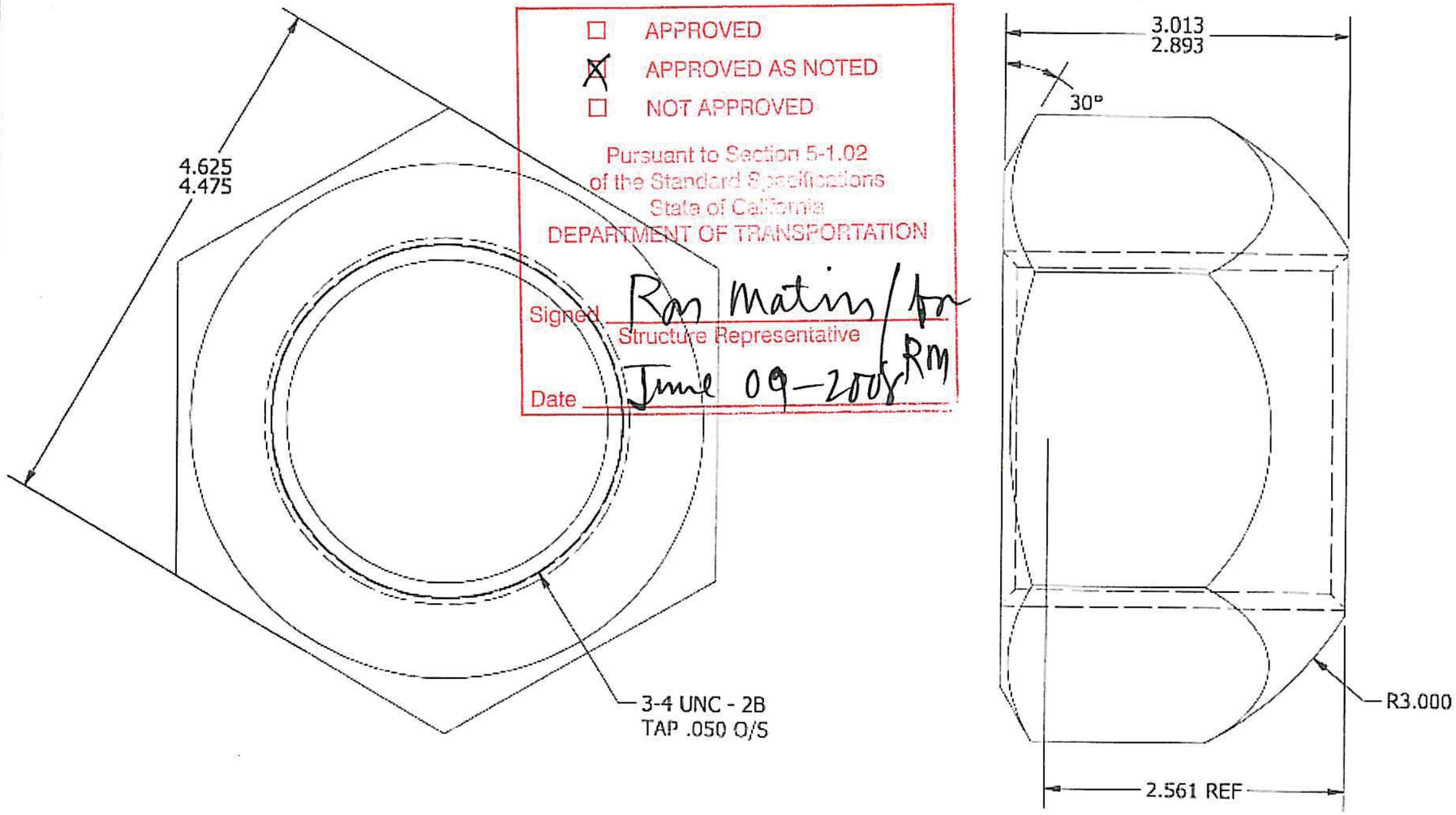

☐ APPROVED
☒ APPROVED AS NOTED
☐ NOT APPROVED

Pursuant to Section 5-1.02
of the Standard Specifications
State of California
DEPARTMENT OF TRANSPORTATION

Signed Ron Matin / for RM
Structure Representative

Date June 09-2008

ENGINEERING
MAR 25 2008
DYSON CORP.

DRAFT

C:\PROJECTS\CUSTOMERS\American Bridge\American Bridge Oakland Bay\3.00 HHN Spherical Fasteners\3.00 Spherical Nut.ipt

THE DYSON CORPORATION
53 FREEDOM RD. PAINESVILLE, OH 44077
440.946.3500 FAX 440.352.2700

TOLERANCES UNLESS OTHERWISE SPECIFIED			
.00, FRACTIONS ± N/A	ASSIGNED BY KW	3/25/2008	CUST: AMERICAN BRIDGE
.000 ± N/A			PROJECT: 3.00"-4 UNC-2B +.050 O/S
ANGLES ± N/A	DRAWN BY Pat	3/25/2008	MATL: ASTM A563 GR DH (HDG)
FINISH ± 250	APPROVED BY		
CONCENTRICITY ± N/A			DWG. NAME: 3.00 Spherical Nut.ipt

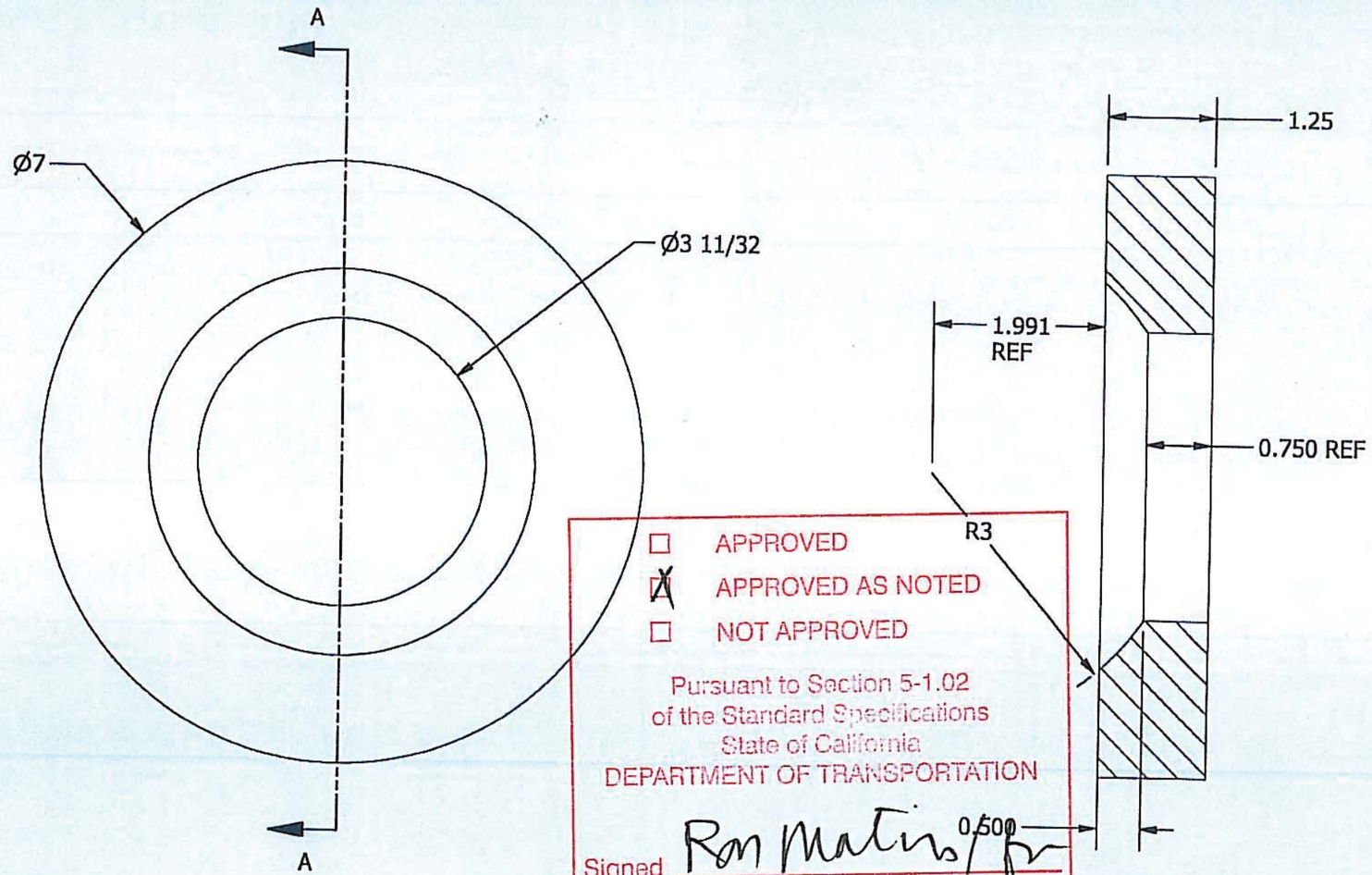

APPROVED
APPROVED AS NOTED
NOT APPROVED

Pursuant to Section 5-1.02
of the Standard Specifications
State of California
DEPARTMENT OF TRANSPORTATION

Signed Ron Matins for
Structure Representative

Date June 09-2008 RM

ENGINEERING
MAR 13 2008
DYSON CORP.

DRAFT

NAME	DATE
SIGNATURE APPROVAL	

TOLERANCES
UNLESS OTHERWISE SPECIFIED
.00, FRACTIONS ± 1/16
.000 ± 1/64
ANGLES ± N/A
FINISH ± 250
CONCENTRICITY ±

ASSIGNED BY	KW	3/13/2008
DRAWN BY	Pat	3/13/2008
APPROVED BY		

THE DYSON CORPORATION
53 FREEDOM RD. PAINESVILLE, OH 44077
440.946.3500 FAX 440.352.2700

CUST: AMERICAN BRIDGE
PROJECT: 3.00 SPHERICAL PLATE WASHER
MATL: ASTM ~~A572 Gr 50 (HDG)~~
A514 - CHANGE BY ABF 4-30-2008
PO # SO #
DWG. NAME: Spherical Round Plate.ipt REV

C:\PROJECTS\CUSTOMERS\American Bridge\American Bridge Oakland Bay\3.00 HHN Spherical Fasteners\Spherical Round Plate.ipt

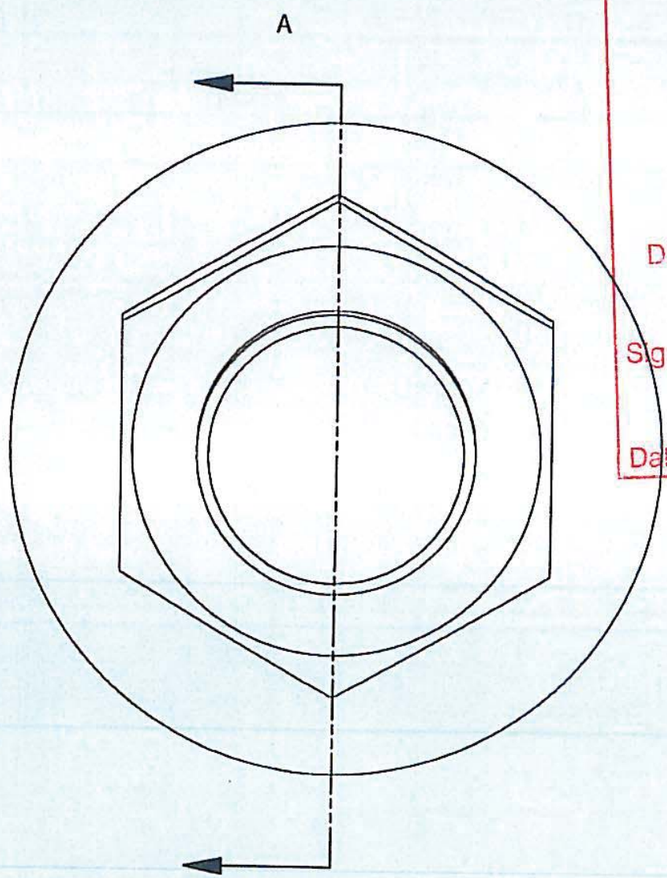

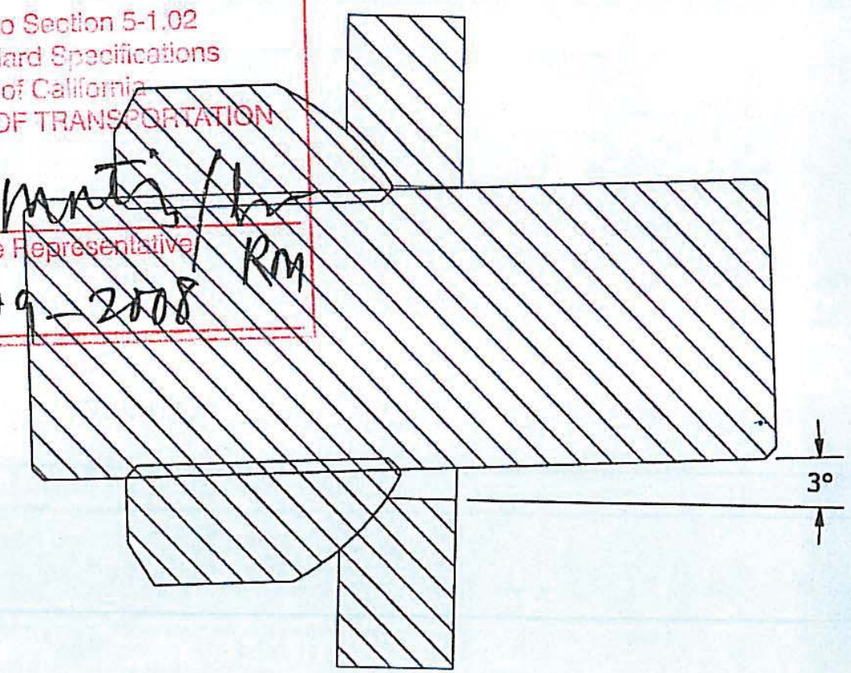

SECTION A-A

☐ APPROVED
☒ APPROVED AS NOTED
☐ NOT APPROVED

Pursuant to Section 5-1.02
of the Standard Specifications
State of California
DEPARTMENT OF TRANSPORTATION

Signed Ron Martin/RM
Structure Representative

Date June 09 - 2008

ENGINEERING
MAR 13 2008
DYSON CORP.

DRAFT

NAME	DATE
SIGNATURE APPROVAL	

TOLERANCES
UNLESS OTHERWISE SPECIFIED

.00, FRACTIONS ± N/A
.000 ± N/A
ANGLES ± N/A
FINISH ± N/A
CONCENTRICITY ± N/A

THE DYSON CORPORATION
53 FREEDOM RD. PAINESVILLE, OH 44077
440.946.3500 FAX 440.352.2700

ASSIGNED BY	KW	3/13/2008
DRAWN BY	Pat	3/13/2008
APPROVED BY		

CUST: AMERICAN BRIDGE
PROJECT: 3" SPHERICAL ASSY
MATL: N/A
PO # SO #
DWG. NAME: 3.00 Round Spherical Assy.iam REV

C:\PROJECTS\CUSTOMERS\American Bridge\American Bridge Oakland Bay\3.00 HHN Spherical Fasteners\3.00 Round Spherical Assy.iam

STATE OF CALIFORNIA-BUSINESS, TRANSPORTATION AND HOUSING AGENCY ARNOLD SCHWARZENEGGER, Governor

DEPARTMENT OF TRANSPORTATION - District 4 Toll Bridge Program
333 Burma Rd.
Oakland, CA 94607
(510) 622-5660, (510) 286-0550 fax

Flex your power
Be energy efficient!

July 14, 2008

Contract No. 04-0120F4
04-SF-80-13.2 / 13.9
Self-Anchored Suspension Bridge
Letter No. 05.03.01-002360

Michael Flowers
Project Executive
American Bridge/Fluor, A JV
375 Burma Road
Oakland, CA 94607

Dear Michael Flowers,

Quality Assurance Testing of Externally Threaded Fasteners

This letter is issued in response to renewed discussions at the Working Drawing Campus (WDC) and ABF-RFI-001233R04, concerning the Quality Assurance (QA) testing regimen of externally threaded fasteners, nuts and washers (fastener assemblies) for the SAS Project.

Initial discussions concerning the QA sampling requirements took place at the WDC in June 2007 and predominately concentrated on the QA sampling quantity for specialized and large diameter fastener assemblies used on the Cable System and the E2 Bearing and Shear Keys. A spreadsheet quantifying the sample size was provided at that time in draft format for discussion purposes only.

In addition, the Contractor was reminded at these meetings that QA testing of fastener assemblies will be performed pursuant to Standard Specification Section 6-1.01, "Source of Supply and Quality of Materials," and that the sample quantity, per heat, will be in accordance with Contract Special Provision Section 10-1.59, "Steel Structures," subsection "Bolted Connections," as shown below:

Lot Size (No. of Bolts)	Sample Size (No. of Bolts)
2 to 15	3
16 to 25	4
26 to 50	5
51 to 90	7
91 to 150	8
151 to 280	9
281 to 10,000	12
10,001 to 500,000	16
500,001 and over	20

The spreadsheet attached to this letter titled "*QA Sampling – Cable System/E2 Bearings & Shear Keys*," modifies the sample size provided above for some of the Cable System and E2 Bearing and Shear Key fastener assemblies. Please provide test samples in accordance with the attachment.

Please contact Brian Boal at (510) 622-5191 should you have any questions.

Sincerely,

GARY PURSELL
Resident Engineer

Attachment

cc: Rick Morrow
Brian Boal
Mark Woods
Gary Lai
Venkatesh Iyer
Ryan Smith
file: 05.03.01

QA Sampling - Cable System/E2 Bearings & Shear Keys

Description	Size	Material & Grade	Coating	Dwg Quantity Required	Spare Fasteners	Finished Item (Notes 10, 11, 12)	Material Only (Notes 10 & 13)	Comments
						Bolt/Rod quantities to be sent to Translab	Material sample quantities to be sent to Translab	
Cable Band Bolts	51mm dia x 610	A354 BC	HD Galv	1260	20	5	0	30 Bolts are required in addition to those listed in the table pe Section 10-1.60 "Cable System," for tensile testing & load extension curves
Cable Band Bolts	51mm dia x 710	A354 BC	HD Galv	48	T.B.D. by ABF	1	0	
Cable Band Anchor Rods	75mm dia x ###	A354 BD	HD Galv	24	T.B.D. by ABF	1	2	In all cases, three (3) samples per heat are required. At the Contractor's option, 3 full size finishe items may be furnished.
Tower Saddle Tie Rods	4" dia x ###	A354 BD	HD Galv	24	T.B.D. by ABF	1	2	In all cases, three (3) samples per heat are required. At the Contractor's option, 3 full size finishe items may be furnished.
East Saddle Tie Rods	3" dia x ***	A354 BD	HD Galv	18	T.B.D. by ABF	1	2	In all cases, three (3) samples per heat are required. At the Contractor's option, 3 full size finishe items may be furnished.
East Saddle Anchor Rods	50mm dia x ***	A354 BD	HD Galv	32	T.B.D. by ABF	1	2	In all cases, three (3) samples per heat are required. At the Contractor's option, 3 full size finishe items may be furnished.
West Deviation Saddle Tie Rods	1.75" dia x ***	A354 BC	HD Galv	42	T.B.D. by ABF	1	2	In all cases, three (3) samples per heat are required. At the Contractor's option, 3 full size finishe items may be furnished.
West Deviation Saddle Anchor Rods	50mm dia x ***	A354 BC	HD Galv	168	T.B.D. by ABF	1	2	In all cases, three (3) samples per heat are required. At the Contractor's option, 3 full size finishe items may be furnished.
Jacking Saddle Tie Rods	1.5" dia x ***	A354 BC	HD Galv	8	T.B.D. by ABF	1	2	In all cases, three (3) samples per heat are required. At the Contractor's option, 3 full size finishe items may be furnished.
Suspender Socket Anchor Rods - Type I	90mm dia x ***	A354 BC	HD Galv	352	T.B.D. by ABF	1	2	In all cases, three (3) samples per heat are required. At the Contractor's option, 3 full size finishe items may be furnished.
Suspender Socket Anchor Rods - Type II	100mm dia x ***	A354 BC	HD Galv	48	T.B.D. by ABF	1	2	In all cases, three (3) samples per heat are required. At the Contractor's option, 3 full size finishe items may be furnished.
Tower Suspender Anchor Rod	90mm dia x ***	A354 BC	HD Galv	16	T.B.D. by ABF	Included with Type I Suspender	Included with Type I Suspender	
E2 Shear Key	76mm dia x ***	A354 BD	HD Galv	192	T.B.D. by ABF	1	2	In all cases, three (3) samples per heat are required. At the Contractor's option, 3 full size finishe items may be furnished.
E2 Shear Key	76mm dia x ***	A354 BD	HD Galv	336	T.B.D. by ABF	1	2	In all cases, three (3) samples per heat are required. At the Contractor's option, 3 full size finishe items may be furnished.
E2 Bearing	76mm dia x ***	A354 BD	HD Galv	96	T.B.D. by ABF	1	2	In all cases, three (3) samples per heat are required. At the Contractor's option, 3 full size finishe items may be furnished.
E2 Bearing	50mm dia x ***	A354 BD	HD Galv	224	T.B.D. by ABF	1	2	In all cases, three (3) samples per heat are required. At the Contractor's option, 3 full size finishe items may be furnished.
Main Cable Anchor Rods	90mm dia x ###	A354 BD	HD Galv	274	T.B.D. by ABF	1	2	In all cases, three (3) samples per heat are required. At the Contractor's option, 3 full size finishe items may be furnished.

Notes/Legend:

1) Quantities for testing are per Lot. (Lot implies same diameter, length, heat, as well as heat treatment batch)
2) The number of samples indicated will be for Caltrans Lab testing.
3) Quantities listed do not take into account re-testing criteria due to failure
4) This list is NOT all inclusive. Items not listed are to follow the sampling size table in Section 10-1.59 "Steel Stuctures" of the Contract Special Provisions
5) ### = Fastener length varies; length to be determined by ABF's Means & Methods; *** = Fastener length to be determined by ABF's Means & Methods
6) A354 does not have metric equivalent. All Fastener diameters will be in imperial. Those shown in imperial were requested in RFI #278R0 & #281R1. Contract Plans - General Note allows for size substitution as clarified in RFI #65R0
7) ASTM A354 requires that the number of tests conform to ASTM F1470 and performed in accordance with ASTM F606
8) Number of tests/requirements for ASTM F1470 not shown
9) Quantities assume that no ROCAP testing required.
10) Quantities provided are ONLY applicable if manufacturer passes Department Audit
11) Finished Items shall be fabricated full-size; the Engineer will select one at random, and the fabricator may send to Trans Lab either this sample OR a 1200 mm length cut from a threaded end of the sample.
12) Each Finished Item sample shall include the same number of washers, nuts, or similar components that will accompany an item's field installation.
13) "Material Only" denotes a sample 300 mm in length (minimum) which need not be threaded; it shall be from the same rod stock/heat treatment lots as the finished product.

Attachment: State Letter 05.03.01-002360 - 14th July 2008

GERDAU MACSTEEL

5591 MORRILL ROAD
JACKSON, MICHIGAN 49201

CERTIFIED MATERIAL TEST REPORT

CODE NCJ10

CUSTOMER ORDER NUMBER	CUSTOMER PART NUMBER	HEAT NUMBER	WORK ORDER NUMBER	DATE
66015		M32854	228544 101	7/13/09

REPORT TO
QUALITY ASSURANCE
THE DYSON CORPORATION

53 FREEDOM RD.

PAINESVILLE , OH 44077

SHIP TO
JOS. DYSON & SONS INC.

53 FREEDOM RD.

PAINESVILLE , OH 44077

ORDERED

GRADE	SIZE	LENGTH
4140	3."	22' 7 3/4"

CUSTOMER SPECIFICATIONS
ASTM A354-07 GRADE BD; Q&T; (AIM FOR 35-37 ROCKWELL C)

CHEMICAL ANALYSIS

C	Mn	P	S	Si	Ni	Cr	Mo	Cu	Sn	Al
0.43	0.88	0.014	0.033	0.26	0.15	0.93	0.17	0.20	0.009	0.020

V	Ca	Nb
0.010	0.0006	0.003

GRAIN SIZE SPECIFICATION ASTM E112 FINE GRAIN 5-8

HARDNESS SPECIFICATION ASTM E10 AFTER HT TREAT

SURFACE HARDNESS (HRC)
BATCH 1 - 36 (100 bars)
BATCH 2 - 32 (119 bars)
BATCH 3 - 35 (40 bars)
BATCH 4 - 37 (10 bars)

Q.A. REVIEWED
DATE 7/20/09
DYSON

We certify that these data are correct and in compliance with specified requirements.

Gerdau MacSteel Monroe
3000 East Front Street
Monroe, MI 48161

Chris Easter
Quality Assurance Representative

CONTINUED ON PAGE 2

GERDAU MACSTEEL

5591 MORRILL ROAD
JACKSON, MICHIGAN 49201

CERTIFIED MATERIAL TEST REPORT

CODE NCJ10

CUSTOMER ORDER NUMBER	CUSTOMER PART NUMBER	HEAT NUMBER	WORK ORDER NUMBER	DATE
66015		M32854	228544 101	7/13/09

REPORT TO
QUALITY ASSURANCE
THE DYSON CORPORATION

53 FREEDOM RD.

PAINESVILLE , OH 44077

SHIP TO
JOS. DYSON & SONS INC.

53 FREEDOM RD.

PAINESVILLE , OH 44077

ORDERED

GRADE	SIZE	LENGTH
4140	3."	22' 7 3/4"

CUSTOMER SPECIFICATIONS
ASTM A354-07 GRADE BD; Q&T; (AIM FOR 35-37 ROCKWELL C)

HARDENABILITY SPECIFICATION ASTM A255/A304

THEORETICAL

J1	2	3	4	5	6	7	8	9	10	11	12	13	14	15	16	18	20	22	24	26	28	30	32	34
58	58	58	58	58	58	58	56	55	53		51		49		47	46	46		44		41		39	

PHYSICALS SPECIFICATION ASTM E8/A370 AFTER HT TREAT

2.0 IN

TENSILE (KSI) YIELD (KSI) % ELONGATION REDUCTION OF AREA

	Tensile (KSI)	YIELD	ELONGATION	ROA	
BATCH 1 -	157.8	136.1	16	47	(100 bars)
BATCH 2 -	155.6	133.1	17	53	(119 bars)
BATCH 3 -	158.2	137.7	14	40	(40 bars)
BATCH 4 -	153.0	133.0	14.8	44	(10 bars)

REDUCTION RATIO

RATIO= 4.9 TO 1.0

Q.A. REVIEWED
DATE 7/20/09
DYSON

SURFACE INSPECT TO ASTM F788/F788M-02
** MATERIAL 100% MELTED AND MANUFACTURED IN THE U.S.A. BY THE ELECTRIC ARC FURNACE AND CONTINUOUS CASTING METHOD. THE PRODUCT HAS NOT BEEN REPAIRED BY WELDING AND THIS MATERIAL HAS NOT BEEN EXPOSED

We certify that these data are correct and in compliance with specified requirements.

Gerdau MacSteel Monroe
3000 East Front Street
Monroe, MI 48161

Chris Easler
Quality Assurance Representative

CONTINUED ON PAGE 3

GERDAU MACSTEEL

5591 MORRILL ROAD
JACKSON, MICHIGAN 49201

CERTIFIED MATERIAL TEST REPORT

CODE NCJ10

CUSTOMER ORDER NUMBER	CUSTOMER PART NUMBER	HEAT NUMBER	WORK ORDER NUMBER	DATE
66015		M32854	228544 101	7/13/09

REPORT TO
QUALITY ASSURANCE
THE DYSON CORPORATION

53 FREEDOM RD.

PAINESVILLE , OH 44077

SHIP TO
JOS. DYSON & SONS INC.

53 FREEDOM RD.

PAINESVILLE , OH 44077

ORDERED

GRADE	SIZE	LENGTH
4140	3."	22' 7 3/4"

CUSTOMER SPECIFICATIONS
ASTM A354-07 GRADE BD; Q&T; (AIM FOR 35-37 ROCKWELL C)

TO MERCURY OR TO ANY OTHER METAL ALLOY THAT IS LIQUID AT AMBIENT TEMPERATURES DURING PROCESSING OR WHILE IN OUR POSSESSION. **

Q.A. REVIEWED
DATE 7/20/09
DYSON

We certify that these data are correct and in compliance with specified requirements.

Gerdau MacSteel Monroe
3000 East Front Street
Monroe, MI 48161

Chris Easter
Quality Assurance Representative

GERDAU MACSTEEL

5591 MORRILL ROAD
JACKSON, MICHIGAN 49201

CERTIFIED MATERIAL TEST REPORT

CODE NCJ12

CUSTOMER ORDER NUMBER	CUSTOMER PART NUMBER	HEAT NUMBER	WORK ORDER NUMBER	DATE
6015		M32854	228544 101	7/13/09

REPORT TO
QUALITY ASSURANCE
THE DYSON CORPORATION

53 FREEDOM RD.

PAINESVILLE , OH 44077

SHIP TO
JOS. DYSON & SONS INC.

53 FREEDOM RD.

PAINESVILLE , OH 44077

ORDERED

GRADE	SIZE	LENGTH
4140	3."	22' 7 3/4"

CUSTOMER SPECIFICATIONS
ASTM A354-07 GRADE BD; Q&T; (AIM FOR 35-37 ROCKWELL C)

CHEMICAL ANALYSIS

C	Mn	P	S	Si	Ni	Cr	Mo	Cu	Sn	Al
0.43	0.88	0.014	0.033	0.26	0.15	0.93	0.17	0.20	0.009	0.020

V	Ca	Nb
0.010	0.0006	0.003

GRAIN SIZE SPECIFICATION ASTM E112 FINE GRAIN 5-8

HARDNESS SPECIFICATION ASTM E10 AFTER HT TREAT

SURFACE HARDNESS (HRC)
BATCH 1 - 36 (100 bars)
BATCH 2 - 32 (119 bars)
BATCH 3 - 35 (40 bars)
BATCH 4 - 37 (10 bars)

Q.A. REVIEWED
DATE 7/20/09
DYSON

We certify that these data are correct and in compliance with specified requirements.

Chris Easter
Quality Assurance Representative

Gerdau MacSteel Monroe
3000 East Front Street
Monroe, MI 48161

GERDAU MACSTEEL

5591 MORRILL ROAD
JACKSON, MICHIGAN 49201

CERTIFIED MATERIAL TEST REPORT

CODE NCJ12

CUSTOMER ORDER NUMBER	CUSTOMER PART NUMBER	HEAT NUMBER	WORK ORDER NUMBER	DATE
66015		M32854	228544 101	7/13/09

REPORT TO
QUALITY ASSURANCE
THE DYSON CORPORATION

53 FREEDOM RD.

PAINESVILLE , OH 44077

SHIP TO
JOS. DYSON & SONS INC.

53 FREEDOM RD.

PAINESVILLE , OH 44077

ORDERED

GRADE	SIZE	LENGTH
4140	3."	22' 7 3/4"

CUSTOMER SPECIFICATIONS

ASTM A354-07 GRADE BD; Q&T; (AIM FOR 35-37 ROCKWELL C)

HARDENABILITY SPECIFICATION ASTM A255/A304

THEORETICAL

J1	2	3	4	5	6	7	8	9	10	11	12	13	14	15	16	18	20	22	24	26	28	30	32	34
58	58	58	58	58	58	58	56	55	53		51		49		47	46	46		44		41		39	

PHYSICALS SPECIFICATION ASTM E8/A370 AFTER HT TREAT

2.0 IN

TENSILE (KSI) YIELD (KSI) % ELONGATION REDUCTION OF AREA

	Tensile (KSI)	YIELD	ELONGATION	ROA	
BATCH 1 -	157.8	136.1	16	47	(100 bars)
BATCH 2 -	155.6	133.1	17	53	(119 bars)
BATCH 3 -	158.2	137.7	14	40	(40 bars)
BATCH 4 -	153.0	133.0	14.8	44	(10 bars)

REDUCTION RATIO

RATIO= 4.9 TO 1.0

Q.A. REVIEWED
DATE 7/20/09
DYSON

SURFACE INSPECT TO ASTM F788/F788M-02

** MATERIAL 100% MELTED AND MANUFACTURED IN THE U.S.A. BY THE ELECTRIC ARC FURNACE AND CONTINUOUS CASTING METHOD. THE PRODUCT HAS NOT BEEN REPAIRED BY WELDING AND THIS MATERIAL HAS NOT BEEN EXPOSED

We certify that these data are correct and in compliance with specified requirements.

Gerdau MacSteel Monroe
3000 East Front Street
Monroe, MI 48161

Quality Assurance Representative

CONTINUED ON PAGE 3

GERDAU MACSTEEL

5591 MORRILL ROAD
JACKSON, MICHIGAN 49201

CERTIFIED MATERIAL TEST REPORT

CODE NCJ12

CUSTOMER ORDER NUMBER	CUSTOMER PART NUMBER	HEAT NUMBER	WORK ORDER NUMBER	DATE
66015		M32854	228544 101	7/13/09

REPORT TO
QUALITY ASSURANCE
THE DYSON CORPORATION

53 FREEDOM RD.

PAINESVILLE , OH 44077

SHIP TO
JOS. DYSON & SONS INC.

53 FREEDOM RD.

PAINESVILLE , OH 44077

ORDERED

GRADE	SIZE	LENGTH
4140	3."	22' 7 3/4"

CUSTOMER SPECIFICATIONS

ASTM A354-07 GRADE BD; Q&T; (AIM FOR 35-37 ROCKWELL C)

TO MERCURY OR TO ANY OTHER METAL ALLOY THAT IS LIQUID AT AMBIENT TEMPERATURES DURING PROCESSING OR WHILE IN OUR POSSESSION. **

Q.A. REVIEWED
DATE 7/20/09
DYSON

We certify that these data are correct and in compliance with specified requirements.

Gerdau MacSteel Monroe
3000 East Front Street
Monroe, MI 48161

Chief Inspector

Director of Quality Assurance Representative

GERDAU MACSTEEL

5591 MORRILL ROAD
JACKSON, MICHIGAN 49201

CERTIFIED MATERIAL TEST REPORT

CODE NCJ11

CUSTOMER ORDER NUMBER	CUSTOMER PART NUMBER	HEAT NUMBER	WORK ORDER NUMBER	DATE
66015		M32854	228544 101	7/13/09

REPORT TO
QUALITY ASSURANCE
THE DYSON CORPORATION

53 FREEDOM RD.

PAINESVILLE , OH 44077

SHIP TO
JOS. DYSON & SONS INC.

53 FREEDOM RD.

PAINESVILLE , OH 44077

ORDERED

GRADE	SIZE	LENGTH
4140	3."	22' 7 3/4"

CUSTOMER SPECIFICATIONS
ASTM A354-07 GRADE BD; Q&T; (AIM FOR 35-37 ROCKWELL C)

CHEMICAL ANALYSIS

C	Mn	P	S	Si	Ni	Cr	Mo	Cu	Sn	Al
0.43	0.88	0.014	0.033	0.26	0.15	0.93	0.17	0.20	0.009	0.020

V	Ca	Nb
0.010	0.0006	0.003

GRAIN SIZE SPECIFICATION ASTM E112 FINE GRAIN 5-8

HARDNESS SPECIFICATION ASTM E10 AFTER HT TREAT

SURFACE HARDNESS (HRC)
BATCH 1 - 36 (100 bars)
BATCH 2 - 32 (119 bars)
BATCH 3 - 35 (40 bars)
BATCH 4 - 37 (10 bars)

Q.A. REVIEWED
DATE 7/20/09
DYSON

We certify that these data are correct and in compliance with specified requirements.

Gerdau MacSteel Monroe
3000 East Front Street
Monroe, MI 48161

Chris Easter
Quality Assurance Representative

CONTINUED ON PAGE 2

GERDAU MACSTEEL

5591 MORRILL ROAD
JACKSON, MICHIGAN 49201

CERTIFIED MATERIAL TEST REPORT

CODE NCJ11

CUSTOMER ORDER NUMBER	CUSTOMER PART NUMBER	HEAT NUMBER	WORK ORDER NUMBER	DATE
66015		M32854	228544 101	7/13/09

REPORT TO
QUALITY ASSURANCE
THE DYSON CORPORATION

53 FREEDOM RD.

PAINESVILLE , OH 44077

SHIP TO
JOS. DYSON & SONS INC.

53 FREEDOM RD.

PAINESVILLE , OH 44077

ORDERED

GRADE	SIZE	LENGTH
4140	3."	22' 7 3/4"

CUSTOMER SPECIFICATIONS

ASTM A354-07 GRADE BD; Q&T; (AIM FOR 35-37 ROCKWELL C)

HARDENABILITY SPECIFICATION ASTM A255/A304

THEORETICAL

J1	2	3	4	5	6	7	8	9	10	11	12	13	14	15	16	18	20	22	24	26	28	30	32	34
58	58	58	58	58	58	58	56	55	53		51		49		47	46	46		44		41		39	

PHYSICALS SPECIFICATION ASTM E8/A370 AFTER HT TREAT

2.0 IN

TENSILE (KSI) YIELD (KSI) % ELONGATION REDUCTION OF AREA

	Tensile(KSI)	YIELD	ELONGATION	ROA	
BATCH 1 -	157.8	136.1	16	47	(100 bars)
BATCH 2 -	155.6	133.1	17	53	(119 bars)
BATCH 3 -	158.2	137.7	14	40	(40 bars)
BATCH 4 -	153.0	133.0	14.8	44	(10 bars)

REDUCTION RATIO

RATIO= 4.9 TO 1.0

Q.A. REVIEWED
DATE 7/20/09
DYSON

SURFACE INSPECT TO ASTM F788/F788M-02

** MATERIAL 100% MELTED AND MANUFACTURED IN THE U.S.A. BY THE ELECTRIC ARC FURNACE AND CONTINUOUS CASTING METHOD. THE PRODUCT HAS NOT BEEN REPAIRED BY WELDING AND THIS MATERIAL HAS NOT BEEN EXPOSED

We certify that these data are correct and in compliance with specified requirements.

Gerdau MacSteel Monroe
8000 East Front Street
Monroe, MI 48161

Quality Assurance Representative

CONTINUED ON PAGE 3

GERDAU MACSTEEL

5591 MORRILL ROAD
JACKSON, MICHIGAN 49201

CERTIFIED MATERIAL TEST REPORT

CODE NCJ11

CUSTOMER ORDER NUMBER	CUSTOMER PART NUMBER	HEAT NUMBER	WORK ORDER NUMBER	DATE
66015		M32854	228544 101	7/13/09

REPORT TO
QUALITY ASSURANCE
THE DYSON CORPORATION

53 FREEDOM RD.

PAINESVILLE , OH 44077

SHIP TO
JOS. DYSON & SONS INC.

53 FREEDOM RD.

PAINESVILLE , OH 44077

ORDERED

GRADE	SIZE	LENGTH
4140	3."	22' 7 3/4"

CUSTOMER SPECIFICATIONS

ASTM A354-07 GRADE BD; Q&T; (AIM FOR 35-37 ROCKWELL C)

TO MERCURY OR TO ANY OTHER METAL ALLOY THAT IS LIQUID AT AMBIENT TEMPERATURES DURING PROCESSING OR WHILE IN OUR POSSESSION. **

Q.A. REVIEWED
DATE 7/20/09
DYSON

We certify that these data are correct and in compliance with specified requirements.

Gerdau MacSteel Monroe
3000 East Front Street
Monroe, MI 48161

Quality Assurance Representative

DEPARTMENT OF TRANSPORTATION
DIVISION OF ENGINEERING SERVICES
Office of Structural Materials
Quality Assurance and Source Inspection

Bay Area Branch
690 Walnut Ave.St. 150
Vallejo, CA 94592-1133
(707) 649-5453
(707) 649-5493

Contract #: 04-0120F4
Cty: SF/ALA Rte: 80 PM: 13.2/13.9
File #: 76.15

SOURCE INSPECTION REPORT

Resident Engineer: Pursell, Gary
Address: 333 Burma Road
City: Oakland, CA 94607

Report No: SIR-001622
Date Inspected: 07-Jan-2010

Project Name: SAS Superstructure
Prime Contractor: American Bridge/Fluor Enterprises, a JV
Contractor: Dyson Corp. & Subs

OSM Arrival Time: 900
OSM Departure Time: 1700
Location: Painesville, Ohio

Quality Control Contact: Bob Bobnar
Quality Control Present: ☑ Yes ☐ No
Material transfer: ☐ Yes ☐ No ☑ N/A
Sampled Items: ☐ Yes ☐ No ☑ N/A
Stock Transfer: ☐ Yes ☐ No ☑ N/A
OK to Cut: ☐ Yes ☐ No ☑ N/A
Rebar Test Witness: ☐ Yes ☐ No ☑ N/A
Delayed/Cancelled: ☐ Yes ☑ No ☐ N/A
Other: MT of anchor rod bolts
Bridge No: 34-0006
Component: See below
Bid Item: See below
Lot No: N / A

Summary of Items Observed:

The Caltrans Quality Assurance (QA) Inspector Scott Croff was present at Dyson Corp in Painesville, Ohio, to observe the fabrication of components that will be used in the San Francisco / Oakland Bay Bridge (SFOBB) project.

The QA Inspector met with Dyson Quality Control Manager (QCM) Bob Bobnar and Stork Herron Testing Labs (SHTL) Non-Destructive Testing (NDT) Technician Matt Novak. The QA Inspector was informed that Wet-Fluorescent Magnetic Particle Testing (Wet Mag) will be conducted on 3" diameter A354 BD rods [bid item 45 (s) and bid item 61 (s-f)] , that have been milled / fabricated at Dyson Corp.

The QA Inspector noted that the anchor rods have machined threads for approximately 300mm on each end, and that the remainder has a stock (turned) finish. The QA Inspector witnessed the NDT technician performing Wet Mag on the machined threads of the anchor rods. Upon completion of the inspection, the QA Inspector was informed that no relevant indications were observed. The QA Inspector conducted verification Wet Mag of the anchor rod threads. See the accompanying TL-6028 report for additional information. See the attached photos.

The QA Inspector was asked by Dyson QCM to verify if only the threaded portions of the anchor rods needed to be examined. The QA Inspector reviewed the contract documents and spoke with the Structural Materials Representative (SMR) Kit Guest. It was determined that the full length of the anchor rods should be examined. The QA Inspector relayed that information to Dyson QCM and the Stork Herron NDT technician. The QA Inspector observed that the shafts of the anchor rods have grease, dirt and light rust and need to be cleaned to facilitate the Wet Mag inspection. At the end of the shift, the QA Inspector noted that Dyson personnel are using

wire brushes and solvent to clean the anchor rods. The QA Inspector was informed that the Wet Mag will be continued tomorrow, Jan. 8th, at 4pm.

The QA Inspector also noted that Dyson personnel are machining / fabricating components for: bid item 45 (s), bid item 59 (s-f), bid item 61 (s-f) and bid item 68 (s-f). The QA Inspector was informed that Dyson will have additional material ready for release tomorrow, to be shipped to WireCo. There were no other notable observations made during this shift.

Summary of Conversations:

See above.

Comments

This report is for the purpose of determining conformance with the contract documents and is not for the purpose of making repair or fit for purpose recommendations. Should you require recommendations concerning repairs or remedial efforts please contact Nina Choy, (510) 385-5910, who represents the Office of Structural Materials for your project.

Inspected By:	Croff,Scott	Quality Assurance Inspector
Reviewed By:	Levell,Bill	QA Reviewer

DEPARTMENT OF TRANSPORTATION
DIVISION OF ENGINEERING SERVICES
Office of Structural Materials
Quality Assurance and Source Inspection

Bay Area Branch
690 Walnut Ave.St. 150
Vallejo, CA 94592-1133
(707) 649-5453
(707) 649-5493

Contract #: 04-0120F4
Cty: SF/ALA Rte: 80 PM: 13.2/13.9
File #: 76.15

SOURCE INSPECTION REPORT

Resident Engineer: Pursell, Gary
Address: 333 Burma Road
City: Oakland, CA 94607

Report No: SIR-001623
Date Inspected: 08-Jan-2010

Project Name: SAS Superstructure
Prime Contractor: American Bridge/Fluor Enterprises, a JV
Contractor: Dyson Corp. & Subs

OSM Arrival Time: 1300
OSM Departure Time: 2100
Location: Painesville, Ohio

Quality Control Contact: Bob Bobnar
Quality Control Present: ☑ Yes ☐ No
Material transfer: ☑ Yes ☐ No ☐ N/A
Sampled Items: ☐ Yes ☐ No ☑ N/A
Stock Transfer: ☐ Yes ☐ No ☑ N/A
OK to Cut: ☐ Yes ☐ No ☑ N/A
Rebar Test Witness: ☐ Yes ☐ No ☑ N/A
Delayed/Cancelled: ☐ Yes ☑ No ☐ N/A
Other: MT of anchor rod bolts
Bridge No: 34-0006
Component: See below
Bid Item: See below
Lot No: B212-004-10

Summary of Items Observed:

The Caltrans Quality Assurance (QA) Inspector Scott Croff was present at Dyson Corp in Painesville, Ohio, to observe the fabrication of components that will be used in the San Francisco / Oakland Bay Bridge (SFOBB) project.

The QA Inspector was requested to release suspender socket components [bid item 68 (s-f)] to WireCo. The QA Inspector verified that check samples have been tested by TransLab and found satisfactory for use. The QA Inspector reviewed the contractor's Certificates of Compliance (C.O.Cs) and shipping documentation. The QA Inspector also made random observations of the3.5" A563 HDG full and jam nuts as they were palletized for shipping. The QA Inspector noted that the material and documentation appeared to be in general compliance with the contract requirements. The QA Inspector issued a green tag and TL-6011 report with lot number B212-004-10 for the material release. See the accompanying TL-6011 report for additional information.

The QA Inspector met with Stork Herron Testing Labs (SHTL) Non-Destructive Testing (NDT) Technician Matt Novak. The QA Inspector was informed that Wet-Fluorescent Magnetic Particle Testing (Wet Mag) will be conducted on 3" diameter A354 BD rods [bid item 45 (s) and bid item 61 (s-f)] , that have been milled / fabricated at Dyson Corp.

The QA Inspector noted that the anchor rods have machined threads for approximately 300mm on each end, and that the remainder has a stock (turned) finish. The QA Inspector noted that the rods have been cleaned and appear to be free of loose rust, dirt and grease at this time. The QA Inspector witnessed the NDT technician performing Wet Mag on the center lengths (un-machined areas) of the anchor rods. The QA Inspector noted that the threaded

areas were examined yesterday, 1-7-2010. Upon completion of the inspection, the QA Inspector was informed that no relevant indications were observed. The QA Inspector conducted verification Wet Mag of the anchor rods. See the accompanying TL-6028 report for additional information.

The QA Inspector also noted that Dyson personnel are machining / fabricating components for: bid item 45 (s), bid item 59 (s-f), bid item 61 (s-f) and bid item 68 (s-f). There were no other notable observations or conversations during this shift.

Summary of Conversations:

See above.

Comments

This report is for the purpose of determining conformance with the contract documents and is not for the purpose of making repair or fit for purpose recommendations. Should you require recommendations concerning repairs or remedial efforts please contact Nina Choy, (510) 385-5910, who represents the Office of Structural Materials for your project.

Inspected By:	Croff,Scott	Quality Assurance Inspector
Reviewed By:	Levell,Bill	QA Reviewer

DEPARTMENT OF TRANSPORTATION
DIVISION OF ENGINEERING SERVICES
Office of Structural Materials
Quality Assurance and Source Inspection

Bay Area Branch
690 Walnut Ave.St. 150
Vallejo, CA 94592-1133
(707) 649-5453
(707) 649-5493

Contract #: 04-0120F4
Cty: SF/ALA Rte: 80 PM: 13.2/13.9
File #: 76.15

SOURCE INSPECTION REPORT

Resident Engineer: Pursell, Gary
Address: 333 Burma Road
City: Oakland, CA 94607

Report No: SIR-001709
Date Inspected: 20-Jan-2010

Project Name: SAS Superstructure
Prime Contractor: American Bridge/Fluor Enterprises, a JV
Contractor: Dyson Corp. & Subs

OSM Arrival Time: 900
OSM Departure Time: 1700
Location: Painesville, Ohio

Quality Control Contact: Bob Bobnar
Quality Control Present: ☑ Yes ☐ No
Material transfer: ☐ Yes ☐ No ☑ N/A
Sampled Items: ☐ Yes ☐ No ☑ N/A
Stock Transfer: ☐ Yes ☐ No ☑ N/A
OK to Cut: ☐ Yes ☐ No ☑ N/A
Rebar Test Witness: ☐ Yes ☐ No ☑ N/A
Delayed/Cancelled: ☐ Yes ☑ No ☐ N/A
Other:
Bridge No: 34-0006
Component: See below
Bid Item: See below
Lot No: N / A

Summary of Items Observed:

The Caltrans Quality Assurance (QA) Inspector Scott Croff was present at Dyson Corp in Painesville, Ohio, to observe the fabrication of components that will be used in the San Francisco / Oakland Bay Bridge (SFOBB) project.

The QA Inspector noted that Dyson personnel are machining / fabricating components for: bid item 45 (s), bid item 61 (s-f) and bid item 68 (s-f). The QA Inspector made general observations of the milling, machining and threading of the various components (sockets, rods, bolts, washers). The QA Inspector noted that all observed work appeared to be performed to commonly accepted industry standards and procedures. See the attached photo.

The QA Inspector was informed that an A354 BD rod, heat treat lot code NCJ10, mill heat M32854 (bid item 45, E2 bearing anchor rod) will be cut in to specimens for tensile and check sample testing. The QA Inspector witnessed the selection of the rod from the manufactured quantity of 65. See the attached photo. The QA Inspector was informed that the tensile tests will be conducted at Tensile Testing Metallurgical Labs, Inc. in Cleveland, Ohio. The QA Inspector made a phone call to the lab and asked to be notified prior to testing. The Lab president Tim Adams replied to the QA Inspector that the samples need to be machined to testing size and that the QA Inspector could be notified to witness the testing. The QA Inspector relayed this information to the Structural Materials Representatives (SMRs) Nina Choy and Kit Guest.

SOURCE INSPECTION REPORT

(Continued Page 2 of 2)

Summary of Conversations:

See above.

Comments

This report is for the purpose of determining conformance with the contract documents and is not for the purpose of making repair or fit for purpose recommendations. Should you require recommendations concerning repairs or remedial efforts please contact Nina Choy, (510) 385-5910, who represents the Office of Structural Materials for your project.

Inspected By:	Croff,Scott	Quality Assurance Inspector
Reviewed By:	Levell,Bill	QA Reviewer

DEPARTMENT OF TRANSPORTATION
DIVISION OF ENGINEERING SERVICES
Office of Structural Materials
Quality Assurance and Source Inspection

Bay Area Branch
690 Walnut Ave.St. 150
Vallejo, CA 94592-1133
(707) 649-5453
(707) 649-5493

Contract #: 04-0120F4
Cty: SF/ALA Rte: 80 PM: 13.2/13.9
File #: 76.15

SOURCE INSPECTION REPORT

Resident Engineer: Pursell, Gary
Address: 333 Burma Road
City: Oakland, CA 94607

Report No: SIR-001666
Date Inspected: 26-Jan-2010

Project Name: SAS Superstructure
Prime Contractor: American Bridge/Fluor Enterprises, a JV
Contractor: Dyson Corp. & Subs

OSM Arrival Time: 900
OSM Departure Time: 1700
Location: Painesville, Ohio

Quality Control Contact: Bob Bobnar
Quality Control Present: ☑ Yes ☐ No
Material transfer: ☑ Yes ☐ No ☐ N/A
Sampled Items: ☐ Yes ☐ No ☑ N/A
Stock Transfer: ☐ Yes ☐ No ☑ N/A
OK to Cut: ☐ Yes ☐ No ☑ N/A
Rebar Test Witness: ☐ Yes ☐ No ☑ N/A
Delayed/Cancelled: ☐ Yes ☑ No ☐ N/A
Other:
Bridge No: 34-0006
Component: See below
Bid Item: See below
Lot No: B212-020-10

Summary of Items Observed:

The Caltrans Quality Assurance (QA) Inspector Scott Croff was present at Dyson Corp in Painesville, Ohio, to observe the fabrication of components that will be used in the San Francisco / Oakland Bay Bridge (SFOBB) project.

The QA Inspector noted that Dyson personnel are machining / fabricating components for: bid item 45 (s), bid item 61 (s-f) and bid item 68 (s-f). The QA Inspector made general observations of the milling, machining and threading of the various components (sockets, rods, bolts, washers). The QA Inspector noted that all observed work appeared to be performed to commonly accepted industry standards and procedures. See the attached photo.

The QA Inspector met with Dyson Quality Control Manager (QCM) Bob Bobnar and was informed that an A354 BD rod, heat treat lot code NCJ12, mill heat M32854 (bid item 45, E2 bearing anchor rod and bid item 61, Shear Key anchor rod) has been cut in to specimens for tensile and check sample testing. The QA Inspector was informed that the tensile tests will be conducted at Tensile Testing Metallurgical Labs, Inc. in Cleveland, Ohio. The QA Inspector asked about the status of the previous samples, heat treat lot code NCJ10, as the testing lab had not informed the QA Inspector that tests were going to be conducted, as requested. The QA Inspector was informed that the other tests have been performed by the lab and the results were acceptable to the ASTM specifications. The QA Inspector was then shown the lab paperwork from the sample testing.

The QA Inspector was requested to release E2 bearing anchor rods [bid item 45 (s)] to Monnig Industries. The QA Inspector reviewed the Certificate of Compliance (C.O.C) and shipping documentation. The QA Inspector also made random observations of the materials as it was presented. The QA Inspector noted that the material and

documentation appeared to be in general compliance with the contract requirements. The QA Inspector issued a green tag with lot number B212-030-10. The QA Inspector was informed that the material will be shipped to Monnig in Glasgow, Missouri, for hot dip galvanizing. See the accompanying TL-6011 report for specific information. See the attached photos.

Summary of Conversations:

See above.

Comments

This report is for the purpose of determining conformance with the contract documents and is not for the purpose of making repair or fit for purpose recommendations. Should you require recommendations concerning repairs or remedial efforts please contact Nina Choy, (510) 385-5910, who represents the Office of Structural Materials for your project.

Inspected By:	Croff,Scott	Quality Assurance Inspector
Reviewed By:	Levell,Bill	QA Reviewer

DEPARTMENT OF TRANSPORTATION
DIVISION OF ENGINEERING SERVICES
Office of Structural Materials
Quality Assurance and Source Inspection

Bay Area Branch
690 Walnut Ave.St. 150
Vallejo, CA 94592-1133
(707) 649-5453
(707) 649-5493

Contract #: 04-0120F4
Cty: SF/ALA Rte: 80 PM: 13.2/13.9
File #: 76.8

COMPONENT MATERIAL INSPECTION REPORT

Resident Engineer: Pursell, Gary
Address: 333 Burma Road
City: Oakland, CA 94607

Report No: CMI-000170
Date Inspected: 26-Jan-2010

Contractor: Dyson Corp. & Subs
Location: Painesville, Ohio
Bridge No.: 34-0006

OSM Arrival Time: 900
OSM Departure Time: 1700
Component:# E2 Bearing Anchor Rods

The following material has been inspected in accordance with Section 6 of the Standard Specifications at the above location. At this point in the fabrication process it appears to comply with contract plans and specifications.

To be shipped to the following vendor or locations: Monnig Industries, 400 Industrial Drive, Glasgow, Missouri

Lot #	Bid Item #	Quantity		Material Description
B212-020-10	45	64	ea	3" A354 BD rods, 22' 7.73" long, mill M32854, heat lot NCJ10

Identification: Green tag was attached to the C.O.C. / shipping package.

Summary of Items Observed:

The QA Inspector reviewed the contractor's Certificate of Compliance (C.O.C) and shipping documentation. The QA Inspector also made random observations of the materials as it was presented. The QA Inspector noted that the material and documentation appeared to be in general compliance with the contract requirements. The QA Inspector issued a green tag with lot number B212-020-10. The QA Inspector was informed that the material will be shipped to Monnig Industries, Glasgow, Missouri, for hot dip galvanizing. The QA Inspector also noted that check sample stock material for the heat treat lot of rods will be included with the shipment.

Summary of Conversations:

See above.

Comments

This report is for the purpose of determining conformance with the contract documents and is not for the purpose of making repair or fit for purpose recommendations. Should you require recommendations concerning repairs or remedial efforts please contact Nina Choy, (510) 385-5910, who represents the Office of Structural Materials for your project.

Inspected By:	Croff, Scott	Quality Assurance Inspector
Reviewed By:	Levell, Bill	QA Reviewer

DEPARTMENT OF TRANSPORTATION
DIVISION OF ENGINEERING SERVICES
Office of Structural Materials
Quality Assurance and Source Inspection

Bay Area Branch
690 Walnut Ave.St. 150
Vallejo, CA 94592-1133
(707) 649-5453
(707) 649-5493

Contract #: 04-0120F4
Cty: SF/ALA Rte: 80 PM: 13.2/13.9
File #: 76.15

SOURCE INSPECTION REPORT

Resident Engineer: Pursell, Gary
Address: 333 Burma Road
City: Oakland, CA 94607

Report No: SIR-001667
Date Inspected: 27-Jan-2010

Project Name: SAS Superstructure
Prime Contractor: American Bridge/Fluor Enterprises, a JV
Contractor: Dyson Corp. & Subs

OSM Arrival Time: 900
OSM Departure Time: 1700
Location: Painesville, Ohio

Quality Control Contact: Bob Bobnar
Quality Control Present: ☑ Yes ☐ No
Material transfer: ☐ Yes ☐ No ☑ N/A
Sampled Items: ☐ Yes ☐ No ☑ N/A
Stock Transfer: ☐ Yes ☐ No ☑ N/A
OK to Cut: ☐ Yes ☐ No ☑ N/A
Rebar Test Witness: ☐ Yes ☐ No ☑ N/A
Delayed/Cancelled: ☐ Yes ☑ No ☐ N/A
Other:
Bridge No: 34-0006
Component: See below
Bid Item: See below
Lot No: N / A

Summary of Items Observed:

The Caltrans Quality Assurance (QA) Inspector Scott Croff was present at Dyson Corp in Painesville, Ohio, to observe the fabrication of components that will be used in the San Francisco / Oakland Bay Bridge (SFOBB) project.

The QA Inspector noted that Dyson personnel are machining / fabricating components for: bid item 45 (s), bid item 61 (s-f) and bid item 68 (s-f). The QA Inspector made general observations of the milling, machining and threading of the various components (sockets, rods, bolts, washers). The QA Inspector noted that all observed work appeared to be performed to commonly accepted industry standards and procedures. See the attached photos.

The QA Inspector was informed that an A354 BD rod, heat treat lot code NCJ12, mill heat M32854 (bid item 45, E2 bearing anchor rods and bid item 61, Shear Key anchor rod) were ready for tensile testing. The QA Inspector traveled to Tensile Testing Metallurgical Labs (TTML) in Cleveland, Ohio. The QA Inspector met with technician Cindy at TTML and was shown the tensile test specimen. The QA Inspector was shown the labs tracking system, the specimen was engraved on the ends, the envelope holding the specimen identified the client and the technician had the specifications for the test. The QA Inspector witnessed the specimen testing. See the attached photos. The QA Inspector observed the technician comparing the yield readings, measuring the elongation and reduction of specimen with ASTM A354 BD requirements. The QA Inspector was informed that the tensile specimen was acceptable to the specification. The QA Inspector was informed that the hardness test specimens are not ready for testing at this time. There were no other notable observations or conversations.

SOURCE INSPECTION REPORT

(Continued Page 2 of 2)

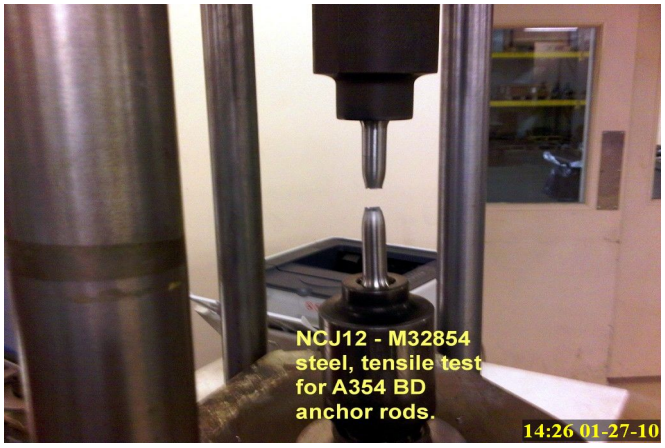

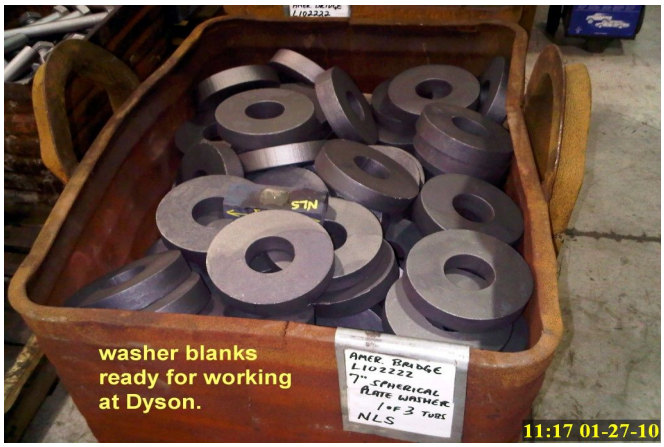

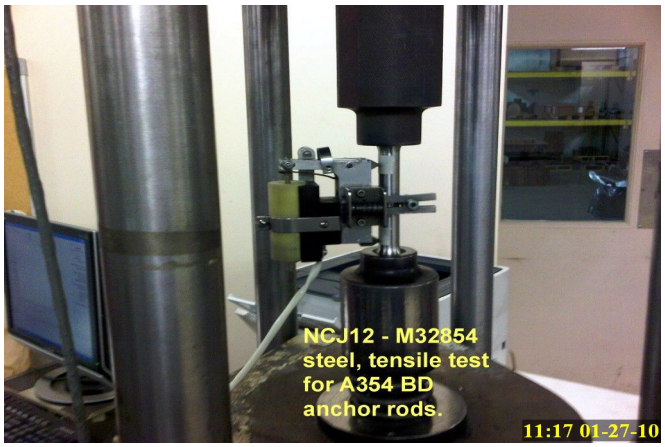

Summary of Conversations:

See above.

Comments

This report is for the purpose of determining conformance with the contract documents and is not for the purpose of making repair or fit for purpose recommendations. Should you require recommendations concerning repairs or remedial efforts please contact Nina Choy, (510) 385-5910, who represents the Office of Structural Materials for your project.

Inspected By:	Croff,Scott	Quality Assurance Inspector
Reviewed By:	Levell,Bill	QA Reviewer

DEPARTMENT OF TRANSPORTATION
DIVISION OF ENGINEERING SERVICES
Office of Structural Materials
Quality Assurance and Source Inspection

Bay Area Branch
690 Walnut Ave.St. 150
Vallejo, CA 94592-1133
(707) 649-5453
(707) 649-5493

Contract #: 04-0120F4
Cty: SF/ALA Rte: 80 PM: 13.2/13.9
File #: 76.15

SOURCE INSPECTION REPORT

Resident Engineer: Pursell, Gary
Address: 333 Burma Road
City: Oakland, CA 94607

Report No: SIR-001729
Date Inspected: 04-Feb-2010

Project Name: SAS Superstructure
Prime Contractor: American Bridge/Fluor Enterprises, a JV
Contractor: Dyson Corp. & Subs

OSM Arrival Time: 800
OSM Departure Time: 1630
Location: Painesville, Ohio

Quality Control Contact: Bob Bobnar
Quality Control Present: ☑ Yes ☐ No
Material transfer: ☐ Yes ☑ No ☐ N/A
Sampled Items: ☐ Yes ☑ No ☐ N/A
Stock Transfer: ☐ Yes ☐ No ☑ N/A
OK to Cut: ☐ Yes ☐ No ☑ N/A
Rebar Test Witness: ☐ Yes ☐ No ☑ N/A
Delayed/Cancelled: ☐ Yes ☑ No ☐ N/A
Other: Fastener Assemblies
Bridge No: 34-0006
Component: Cable System, E2 Bearing, Shear Keys
Bid Item: 45,59,61,68
Lot No: n/a

Summary of Items Observed:

The Caltrans Quality Assurance (QA) Inspector Sherri Brannon was present at Dyson Corporation in Painesville, Ohio, to observe the fabrication of components that will be used in the San Francisco / Oakland Bay Bridge (SFOBB) project.

The QA Inspector Brannon randomly observed Dyson personnel machining / fabricating components for fasteners assemblies for the following: bid item 45 - Furnish and Install Spherical Bushing Bearing (Pier E2), bid item 59 -Furnish Structural Steel (Bridge) (Saddle), bid item 61 - Furnish and Install Shear Key (Pier E2), and bid item 68 Furnish Suspender System. QA Inspector Brannon made general observations of the milling, machining and threading of the various components (rods, bolts, nuts, washers). The QA Inspector Brannon noted that all observed work appeared to be performed to commonly accepted industry standards and procedures.

The following digital photograph below illustrates observation of the activities being performed.

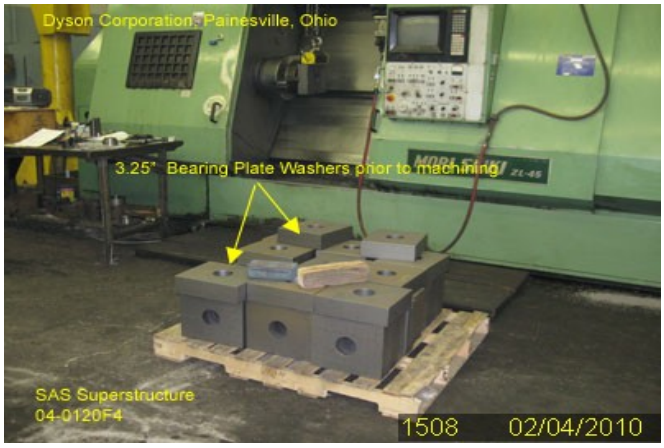

Summary of Conversations:

As stated within this report.

Comments

This report is for the purpose of determining conformance with the contract documents and is not for the purpose of making repair or fit for purpose recommendations. Should you require recommendations concerning repairs or remedial efforts please contact Nina Choy, (510) 385-5910, who represents the Office of Structural Materials for your project.

Inspected By:	Brannon,Sherri	Quality Assurance Inspector
Reviewed By:	Levell,Bill	QA Reviewer

DEPARTMENT OF TRANSPORTATION
DIVISION OF ENGINEERING SERVICES
Office of Structural Materials
Quality Assurance and Source Inspection

Bay Area Branch
690 Walnut Ave.St. 150
Vallejo, CA 94592-1133
(707) 649-5453
(707) 649-5493

Contract #: 04-0120F4
Cty: SF/ALA Rte: 80 PM: 13.2/13.9
File #: 76.15

SOURCE INSPECTION REPORT

Resident Engineer: Pursell, Gary
Address: 333 Burma Road
City: Oakland, CA 94607

Report No: SIR-001746
Date Inspected: 08-Feb-2010

Project Name: SAS Superstructure
Prime Contractor: American Bridge/Fluor Enterprises, a JV
Contractor: Dyson Corp. & Subs

OSM Arrival Time: 800
OSM Departure Time: 1630
Location: Painesville, Ohio

Quality Control Contact: Bob Bobnar
Quality Control Present: ☑ Yes ☐ No
Material transfer: ☑ Yes ☐ No ☐ N/A
Sampled Items: ☐ Yes ☑ No ☐ N/A
Stock Transfer: ☐ Yes ☐ No ☑ N/A
OK to Cut: ☐ Yes ☐ No ☑ N/A
Rebar Test Witness: ☐ Yes ☐ No ☑ N/A
Delayed/Cancelled: ☐ Yes ☑ No ☐ N/A
Other: Fastener Assemblies
Bridge No: 34-0006
Component: Cable System, E2 Bearing, Shear Keys
Bid Item: 45,59,61,68
Lot No: B208-015, 016, & 017-10

Summary of Items Observed:

The Caltrans Quality Assurance (QA) Inspector Sherri Brannon was present at Dyson Corporation in Painesville, Ohio, to observe the fabrication of components that will be used in the San Francisco / Oakland Bay Bridge (SFOBB) project.

Mr. Bob Bobnar informed QA Inspector Brannon that the 3.00"-4UNC-2B heavy hex spherical nuts for bid item #45 and #61, are ready for QA Inspection for green tag release for shipping to Art Galvanizing in Cleveland, Ohio to be hot dipped galvanized. QA Inspector Brannon reviewed applicable documents and verified quantities. After review of the documents and material to be shipped QA Inspector Brannon assigned Caltrans lot number B208-015-10. See Caltrans Component Material Inspection Report, TL-6011 dated February 08, 2010 for specific information.

Mr. Bob Bobnar informed QA Inspector Brannon that the 3.00"-4UNC-2A x 21'-10.84" OAL double end rods for bid item #61 are ready for QA Inspection and green tag release for shipping to Monnig Industries in Glasgow, Missouri for hot dip galvanizing. QA Inspector Brannon reviewed applicable documents and verified quantities. After review of the documents and material to be shipped QA Inspector Brannon assigned Caltrans lot number B208-016-10. See Caltrans Component Material Inspection Report, TL-6011 dated February 08, 2010 for specific information. QA Inspector Brannon also noted that check sample stock material for the heat treat lot of rods will be included with the shipment.

Mr. Bob Bobnar informed QA Inspector Brannon that the 3.00"-4UNC-2A x 22'-2.81" OAL double end rods for bid item #45 are ready for QA Inspection and green tag release for shipping to Monnig Industries in Glasgow,

Missouri for hot dip galvanizing . QA Inspector Brannon reviewed applicable documents and verified quantities. After review of the documents and material to be shipped QA Inspector Brannon assigned Caltrans lot number B208-017-10. See Caltrans Component Material Inspection Report, TL-6011 dated February 08, 2010 for specific information.

The QA Inspector Brannon randomly observed Dyson personnel machining / fabricating components for fasteners assemblies for the following: bid item #45 - Furnish and Install Spherical Bushing Bearing (Pier E2), bid item #59 -Furnish Structural Steel (Bridge) (Saddle), bid item #61 - Furnish and Install Shear Key (Pier E2), and bid item #68 - Furnish Suspender System. QA Inspector Brannon made general observations of the milling, machining and threading of the various components (rods, bolts, nuts, washers). The QA Inspector Brannon noted that all observed work appeared to be performed to commonly accepted industry standards and procedures.

The following digital photograph below illustrates observation of the activities being performed.

Summary of Conversations:

As stated within this report.

Comments

This report is for the purpose of determining conformance with the contract documents and is not for the purpose of making repair or fit for purpose recommendations. Should you require recommendations concerning repairs or remedial efforts please contact Nina Choy, (510) 385-5910, who represents the Office of Structural Materials for your project.

Inspected By:	Brannon,Sherri	Quality Assurance Inspector
Reviewed By:	Levell,Bill	QA Reviewer

DEPARTMENT OF TRANSPORTATION
DIVISION OF ENGINEERING SERVICES
Office of Structural Materials
Quality Assurance and Source Inspection

Bay Area Branch
690 Walnut Ave.St. 150
Vallejo, CA 94592-1133
(707) 649-5453
(707) 649-5493

Contract #: 04-0120F4
Cty: SF/ALA Rte: 80 PM: 13.2/13.9
File #: 76.8

COMPONENT MATERIAL INSPECTION REPORT

Resident Engineer: Pursell, Gary
Address: 333 Burma Road
City: Oakland, CA 94607

Report No: CMI-000175
Date Inspected: 08-Feb-2010

Contractor: Dyson Corp. & Subs
Location: Painesville, ohio
Bridge No.: 34-0006

OSM Arrival Time: 800
OSM Departure Time: 1630
Component:# E2 Bearing/Shear Key Anchor Rod

The following material has been inspected in accordance with Section 6 of the Standard Specifications at the above location. At this point in the fabrication process it appears to comply with contract plans and specifications.

To be shipped to the following vendor or locations: Monnig Industries, 400 Industrial Drive, Glasgow, Missouri

Lot #	Bid Item #	Quantity		Material Description
B208-016-10	61	30	ea	ASTM A354 Gr. BD - 3-00"-4UNC-2A x 21'-10.84" OAL double end rod w/300mm useable thread each end, Lot Code NCJ12, Heat #M32854
B208-017-10	45	32	ea	ASTM A354 Gr. BD - 3-00"-4UNC-2A x 22'-2.81" OAL double end rod w/300mm useable thread each end, Lot Code NCJ11, Heat #M32854

Identification: Green tag attached to Certificate of Compliance / Shipping Package.

Summary of Items Observed:

QA Inspector Brannon reviewed the contractor's Certificate of Compliance (C.O.C) and shipping documentation. QA Inspector Brannon also made random observations of the materials as it was presented. QA Inspector Brannon noted that the material and documentation appeared to be in general compliance with the contract requirements. QA Inspector Brannon issued a green tag with Caltrans QA lot number B208-016-10 for bid item #61 - Furnish and Install Shear Keys (Pier E2) and B208-017-10 for bid item #45 - Furnish and Install Spherical Bushing Bearing (Pier E2)for tracking purposes. QA Inspector Brannon was informed by Mr. Bob Bobnar that the material will be shipped to Monnig Industries for hot dip galvanizing. The QA Inspector also noted that check sample stock material for the heat treat lot of rods will be included with the shipment.

Summary of Conversations:

As stated within this report.

Comments

This report is for the purpose of determining conformance with the contract documents and is not for the purpose of making repair or fit for purpose recommendations. Should you require recommendations concerning repairs or remedial efforts please contact Nina Choy, (510) 385-5910, who represents the Office of Structural Materials for your project.

COMPONENT MATERIAL INSPECTION REPORT

(Continued Page 2 of 2)

Inspected By:	Brannon, Sherri	Quality Assurance Inspector
Reviewed By:	Levell, Bill	QA Reviewer

DEPARTMENT OF TRANSPORTATION
DIVISION OF ENGINEERING SERVICES
Office of Structural Materials
Quality Assurance and Source Inspection

Bay Area Branch
690 Walnut Ave.St. 150
Vallejo, CA 94592-1133
(707) 649-5453
(707) 649-5493

Contract #: 04-0120F4
Cty: SF/ALA Rte: 80 PM: 13.2/13.9
File #: 76.15

SOURCE INSPECTION REPORT

Resident Engineer: Pursell, Gary
Address: 333 Burma Road
City: Oakland, CA 94607

Report No: SIR-001787
Date Inspected: 11-Feb-2010

Project Name: SAS Superstructure
Prime Contractor: American Bridge/Fluor Enterprises, a JV
Contractor: Dyson Corp. & Subs

OSM Arrival Time: 800
OSM Departure Time: 1630
Location: Painesville, ohio

Quality Control Contact: Bob Bobnar
Quality Control Present: ☑ Yes ☐ No
Material transfer: ☐ Yes ☑ No ☐ N/A
Sampled Items: ☐ Yes ☑ No ☐ N/A
Stock Transfer: ☐ Yes ☐ No ☑ N/A
OK to Cut: ☐ Yes ☐ No ☑ N/A
Rebar Test Witness: ☐ Yes ☐ No ☑ N/A
Delayed/Cancelled: ☐ Yes ☑ No ☐ N/A
Other: Fastener Assembloes
Bridge No: 34-0006
Component: Cable System, E2 Bearing, Shear Keys
Bid Item: 45,59,61,68
Lot No: n/a

Summary of Items Observed:

The Caltrans Quality Assurance (QA) Inspector Sherri Brannon was present at Dyson Corporation in Painesville, Ohio, to observe the fabrication of components that will be used in the San Francisco / Oakland Bay Bridge (SFOBB) project.

The QA Inspector Brannon randomly observed Dyson personnel machining / fabricating components for fasteners assemblies for the following: bid item #45 - Furnish and Install Spherical Bushing Bearing (Pier E2), bid item #59 -Furnish Structural Steel (Bridge) (Saddle), bid item #61 - Furnish and Install Shear Key (Pier E2), and bid item #68 - Furnish Suspender System. QA Inspector Brannon made general observations of the milling, machining and threading of the various components (rods, bolts, nuts, washers). The QA Inspector Brannon noted that all observed work appeared to be performed to commonly accepted industry standards and procedures.

QA Inspector Brannon generated tracking log for tracking different components at various stages for machining, galvanizing, painting, magnetic particle testing, shipping and sampling of QA check samples.

The following digital photograph below illustrates observation of the activities being performed.

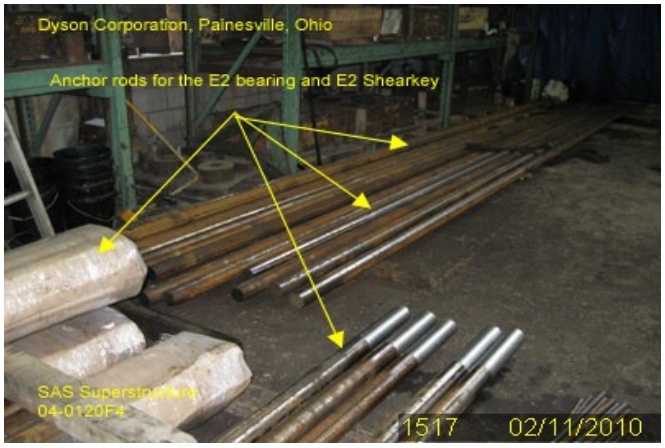

Summary of Conversations:

As stated within this report.

Comments

This report is for the purpose of determining conformance with the contract documents and is not for the purpose of making repair or fit for purpose recommendations. Should you require recommendations concerning repairs or remedial efforts please contact Nina Choy, (510) 385-5910, who represents the Office of Structural Materials for your project.

Inspected By:	Brannon,Sherri	Quality Assurance Inspector
Reviewed By:	Levell,Bill	QA Reviewer

DEPARTMENT OF TRANSPORTATION
DIVISION OF ENGINEERING SERVICES
Office of Structural Materials
Quality Assurance and Source Inspection

Bay Area Branch
690 Walnut Ave.St. 150
Vallejo, CA 94592-1133
(707) 649-5453
(707) 649-5493

Contract #: 04-0120F4
Cty: SF/ALA Rte: 80 PM: 13.2/13.9
File #: 76.15

SOURCE INSPECTION REPORT

Resident Engineer: Pursell, Gary
Address: 333 Burma Road
City: Oakland, CA 94607

Report No: SIR-001788
Date Inspected: 12-Feb-2010

Project Name: SAS Superstructure
Prime Contractor: American Bridge/Fluor Enterprises, a JV
Contractor: Dyson Corp. & Subs

OSM Arrival Time: 800
OSM Departure Time: 1500
Location: Painesville, Ohio

Quality Control Contact: Bob Bobnar
Quality Control Present: ☑ Yes ☐ No
Material transfer: ☑ Yes ☐ No ☐ N/A
Sampled Items: ☐ Yes ☑ No ☐ N/A
Stock Transfer: ☐ Yes ☐ No ☑ N/A
OK to Cut: ☐ Yes ☐ No ☑ N/A
Rebar Test Witness: ☐ Yes ☐ No ☑ N/A
Delayed/Cancelled: ☐ Yes ☑ No ☐ N/A
Other: Fastener Assemblies
Bridge No: 34-0006
Component: Cable System, E2 Bearing, Shear Keys
Bid Item: 45,59,61,68
Lot No: B208-020-10, B208-021-10

Summary of Items Observed:

The Caltrans Quality Assurance (QA) Inspector Sherri Brannon was present at Dyson Corporation in Painesville, Ohio, to observe the fabrication of components that will be used in the San Francisco / Oakland Bay Bridge (SFOBB) project.

Mr. Bob Bobnar informed QA Inspector Brannon that the 3.00"-4UNC-2A x 21'-10.84" OAL double end rods ASTM A354 Gr. BD for bid item #61, are ready for QA Inspection for green tag release for shipping to Monnig Ind. in Glasgow, Missouri to be hot dipped galvanized. QA Inspector Brannon reviewed applicable documents and verified quantities. After review of the documents and material to be shipped QA Inspector Brannon assigned Caltrans lot number B208-020-10. See Caltrans Component Material Inspection Report, TL-6011 dated February 12, 2010 for specific information.

Mr. Bob Bobnar informed QA Inspector Brannon that the 7.00" OD x 3.34" ID 1.25" thick spherical washers ASTM A514 for bid item #45 and #61, are ready for QA Inspection for green tag release for shipping to American Bridge MFG in Coraoplis, Pennsylvania for painting. QA Inspector Brannon reviewed applicable documents and verified quantities. After review of the documents and material to be shipped QA Inspector Brannon assigned Caltrans lot number B208-021-10. See Caltrans Component Material Inspection Report, TL-6011 dated February 12, 2010 for specific information. Note: Mr. Bobnar informed QA inspector Brannon that American Bridge/Flour Enterprises, a JV will send an inspection request to METS for Quality Assurance check samples after painting at American Bridge MFG.

The QA Inspector Brannon randomly observed Dyson personnel machining / fabricating components for fasteners

assemblies for the following: bid item #45 - Furnish and Install Spherical Bushing Bearing (Pier E2), bid item #59 -Furnish Structural Steel (Bridge) (Saddle), bid item #61 - Furnish and Install Shear Key (Pier E2), and bid item #68 - Furnish Suspender System. QA Inspector Brannon made general observations of the milling, machining and threading of the various components (rods, bolts, nuts, washers). The QA Inspector Brannon noted that all observed work appeared to be performed to commonly accepted industry standards and procedures.

QA Inspector Brannon as traveled to Art Galvanizing, to observed hot dip galvanizing on 9.84" to 11.81" rectangle x 3.68" ID x 3.25" thick bearing plate washers. Apone arrival QA Inspector Met with Quality Control (QC) Manager Miss. Adrienne Klein. Miss Klein informed QA Inspector Brannon that Art Galvanizing has not started the hot dip galvanizing for tha Caltrans project yet but will be starting soon.

The following digital photograph below illustrates observation of the activities being performed.

Summary of Conversations:

As stated within this report.

Comments

This report is for the purpose of determining conformance with the contract documents and is not for the purpose of making repair or fit for purpose recommendations. Should you require recommendations concerning repairs or remedial efforts please contact Nina Choy, (510) 385-5910, who represents the Office of Structural Materials for your project.

Inspected By:	Brannon,Sherri	Quality Assurance Inspector
Reviewed By:	Levell,Bill	QA Reviewer

DEPARTMENT OF TRANSPORTATION
DIVISION OF ENGINEERING SERVICES
Office of Structural Materials
Quality Assurance and Source Inspection

Bay Area Branch
690 Walnut Ave.St. 150
Vallejo, CA 94592-1133
(707) 649-5453
(707) 649-5493

Contract #: 04-0120F4
Cty: SF/ALA Rte: 80 PM: 13.2/13.9
File #: 76.8

COMPONENT MATERIAL INSPECTION REPORT

Resident Engineer: Pursell, Gary
Address: 333 Burma Road
City: Oakland, CA 94607

Report No: CMI-000186
Date Inspected: 12-Feb-2010

Contractor: Dyson Corp. & Subs
Location: Painesville, Ohio
Bridge No.: 34-0006

OSM Arrival Time: 830
OSM Departure Time: 1500
Component:# E2 Shear Key Anchor Rods

The following material has been inspected in accordance with Section 6 of the Standard Specifications at the above location. At this point in the fabrication process it appears to comply with contract plans and specifications.

To be shipped to the following vendor or locations: Monnig Industries, 400 Industrial Drive, Glasgow, Missouri

Lot #	Bid Item #	Quantity		Material Description
B208-020-10	61	66	ea	ASTM A354 Gr. BD - 3-00"-4UNC-2A x 21'-10.84" OAL double end rod w/300mm useable thread each end, Lot Code NCJ12, Heat #M32854

Identification: Green tag attached to Certificate of Compliance / Shipping Package.

Summary of Items Observed:

QA Inspector Brannon reviewed the contractor's Certificate of Compliance (C.O.C) and shipping documentation. QA Inspector Brannon also made random observations of the materials as it was presented. QA Inspector Brannon noted that the material and documentation appeared to be in general compliance with the contract requirements. QA Inspector Brannon issued a green tag with Caltrans QA lot number B208-020-10 for bid item #61 - Furnish and Install Shear Keys (Pier E2) for tracking purposes. QA Inspector Brannon was informed by Mr. Bob Bobnar that the material will be shipped to Monnig Industries for hot dip galvanizing.

Summary of Conversations:

As stated within this report.

Comments

This report is for the purpose of determining conformance with the contract documents and is not for the purpose of making repair or fit for purpose recommendations. Should you require recommendations concerning repairs or remedial efforts please contact Nina Choy, (510) 385-5910, who represents the Office of Structural Materials for your project.

Inspected By:	Brannon, Sherri	Quality Assurance Inspector
Reviewed By:	Levell, Bill	QA Reviewer

DEPARTMENT OF TRANSPORTATION
DIVISION OF ENGINEERING SERVICES
Office of Structural Materials
Quality Assurance and Source Inspection

Bay Area Branch
690 Walnut Ave.St. 150
Vallejo, CA 94592-1133
(707) 649-5453
(707) 649-5493

Contract #: 04-0120F4
Cty: SF/ALA Rte: 80 PM: 13.2/13.9
File #: 99.15

SOURCE INSPECTION REPORT

Resident Engineer: Pursell, Gary
Address: 333 Burma Road
City: Oakland, CA 94607

Report No: SIR-001815
Date Inspected: 24-Feb-2010

Project Name: SAS Superstructure
Prime Contractor: American Bridge/Fluor Enterprises, a JV
Contractor: Monnig Industries

OSM Arrival Time: 930
OSM Departure Time: 1500
Location: Glasgow, MO

Quality Control Contact: Ryan Monnig
Quality Control Present: ☑ Yes ☐ No

Material transfer:	☐ Yes	☐ No	☑ N/A	**Sampled Items:**	☐ Yes ☐ No ☑ N/A
Stock Transfer:	☐ Yes	☐ No	☑ N/A	**OK to Cut:**	☐ Yes ☐ No ☑ N/A
Rebar Test Witness:	☐ Yes	☐ No	☑ N/A	**Delayed/Cancelled:**	☐ Yes ☑ No ☐ N/A

Other: E2 Bearing and Shear Key Double Ended Threaded Rods Hot Dip Galvanizing
Bridge No: 34-0006
Component: 3" dia. Double Ended/Threaded Rods
Bid Item: 61
Lot No: B231

Summary of Items Observed:

Caltrans Office of Structural Material (OSM) Quality Assurance (QA) Inspector Joselito Lizardo was present as requested to perform observations on the blasting and galvanizing of the various bolt/rod being performed at Monnig Industries, Inc, Glasgow, MO.

This QA randomly observed blasting of 20 pieces of 3.0” 4UNC 2A X 21’ – 10.84” long Double Ended Rod with 11.81” of useable thread each end per ASTM A354 Gr. BD. The bundles of rods being blasted have trace code of “NCJ 12”. The blasting was performed by Phoenix Industies, Inc a company sub contracted by Monnig Industries. The blasting was also performed by Phoenix Industies, Inc personnel Mr. Gene Eddy. Mr. Eddy was noted using Dupont Starblast (Blasting Abrasive) CP2-156C steel grit. Prior to blasting operations, the rods were noted placed in a rack where the rods could roll freely. The blasting was also performed per bundle (10 rods per bundle) with the trace code hard stamped on one end of the rods. The rods were blasted per Surface Preparation Specification No. 10, Near White Blast Cleaning and were deemed acceptable.

After the blasting operation on each bundle of rods, Monnig Quality Control (QC) Ronnie Wise was present to visually inspect the surface condition of the rods. Monnig QC was noted documenting the blasting process of the rods and also the bundle of rods to be blasted.

Each bundle of rods that has grit blasted was noted immediately brought to the pre flux tank for surface preparation prior to galvanizing. After the pre flux bath, the rods (5 pieces at a time) were then dipped slowly into the galvanizing tank and when they were fully submerged into the molten zinc the rods were shaken slowly to make sure the rods were properly galvanized including the threads. This operation took around 4 to 5 minutes

before the rods got lifted from the tank.

As soon as the rods were lifted from one side of the rod, excess molten zinc from the thread of the rods were then removed by hand brushing the threads using shoe polish brush that was dipped in water. After completing one side of the rod, the other side was lifted and the same procedure to remove excess molten zinc into the threads was implemented. The rods were then placed in a rack where Monnig personnel were again noted brushing more on the threads of the rods to remove more of the excess galvanizing. After removing all the excess galvanizing, the rods were then brought to another rack wherein the rods were cooled by ambient air. As soon as the rods were cooled to ambient temperature, Monnig Quality Control (QC) Jared Forbes was noted measuring the thickness of the rod galvanizing. The QC was also noted using a thickness gauge named Positest with serial number 51212. Average galvanize thickness reading during the observation was 5.0 mills. During the inspection process, Monnig personnel were also noted performing trial fitting both ends of the rod with the Hex nut. Trial fitting of the rods with the nuts was noted using only their bare hands.

SOURCE INSPECTION REPORT

(Continued Page 3 of 3)

Summary of Conversations:

As stated above.

Comments

This report is for the purpose of determining conformance with the contract documents and is not for the purpose of making repair or fit for purpose recommendations. Should you require recommendations concerning repairs or remedial efforts please contact SMR Nina Choy, (510-385-5910), who represents the Office of Structural Materials for your project.

Inspected By:	Lizardo,Joselito	Quality Assurance Inspector
Reviewed By:	Levell,Bill	QA Reviewer

DEPARTMENT OF TRANSPORTATION
DIVISION OF ENGINEERING SERVICES
Office of Structural Materials
Quality Assurance and Source Inspection

Bay Area Branch
690 Walnut Ave.St. 150
Vallejo, CA 94592-1133
(707) 649-5453
(707) 649-5493

Contract #: 04-0120F4
Cty: SF/ALA Rte: 80 PM: 13.2/13.9
File #: 99.15

SOURCE INSPECTION REPORT

Resident Engineer: Pursell, Gary
Address: 333 Burma Road
City: Oakland, CA 94607

Report No: SIR-001817
Date Inspected: 25-Feb-2010

Project Name: SAS Superstructure
Prime Contractor: American Bridge/Fluor Enterprises, a JV
Contractor: Monnig Industries

OSM Arrival Time: 930
OSM Departure Time: 1400
Location: Glasgow, MO

Quality Control Contact: Ryan Monnig
Quality Control Present: ☑ Yes ☐ No
Material transfer: ☐ Yes ☐ No ☑ N/A
Sampled Items: ☐ Yes ☐ No ☑ N/A
Stock Transfer: ☐ Yes ☐ No ☑ N/A
OK to Cut: ☐ Yes ☐ No ☑ N/A
Rebar Test Witness: ☐ Yes ☐ No ☑ N/A
Delayed/Cancelled: ☐ Yes ☑ No ☐ N/A
Other: E2 Bearing and Shear Key Double Ended/Threaded Rods Hot Dip Galvanizing
Bridge No: 34-0006
Component: 3" dia. Double Ended/Threaded Rods
Bid Item: 61
Lot No: B231

Summary of Items Observed:

Caltrans Office of Structural Material (OSM) Quality Assurance (QA) Inspector Joselito Lizardo was present as requested to perform observations on the blasting and galvanizing of the various bolt/rod being performed at Monnig Industries, Inc, Glasgow, MO.

This QA randomly observed Monnig personnel continue blasting 26 pieces of 3.0” 4UNC 2A X 21’ – 10.84” long Double Ended Rod with 11.81” of useable thread each end per ASTM A354 Gr. BD. The bundles of rods being blasted have trace code of “NCJ 12”. The blasting was performed by Phoenix Industies, Inc a company sub contracted by Monnig Industries. The blasting was also performed by Phoenix Industies, Inc personnel Mr. Gene Eddy. Mr. Eddy was noted using Dupont Starblast (Blasting Abrasive) CP2-156C steel grit. Prior to blasting operations, the rods were noted placed in a rack where the rods could roll freely. The blasting was also performed per bundle (10 rods per bundle) with the trace code hard stamped on one end of the rods. The rods were blasted per Surface Preparation Specification No. 10, Near White Blast Cleaning and were deemed acceptable.

After the blasting operation on each bundle of rods, Monnig Quality Control (QC) Ronnie Wise was present to visually inspect the surface condition of the rods. Monnig QC was noted documenting the blasting process of the rods and also the bundle of rods to be blasted.

Each bundle of rods that has grit blasted was noted immediately brought to the pre flux tank for surface preparation prior to galvanizing. After the pre flux bath, the rods (5 pieces at a time) were then dipped slowly into the galvanizing tank and when they were fully submerged into the molten zinc the rods were shaken slowly to make sure the rods were properly galvanized including the threads. This operation took around 4 to 5 minutes

before the rods got lifted from the tank. The galvanizing tank temperature during the operation was noted 835 degree Fahrenheit.

As soon as the rods were lifted from one side of the rod, excess molten zinc from the thread of the rods were then removed by hand brushing the threads using shoe polish brush that was dipped in water. After completing one side of the rod, the other side was lifted and the same procedure to remove excess molten zinc into the threads was implemented. The rods were then placed in a rack where Monnig personnel were again noted brushing more on the threads of the rods to remove more of the excess galvanizing. After removing all the excess galvanizing, the rods were then brought to another rack wherein the rods were cooled by ambient air. As soon as the rods were cooled to ambient temperature, Monnig Quality Control (QC) Jared Forbes was noted measuring the thickness of the rod galvanizing. The QC was also noted using a thickness gauge named Positest with serial number 51212. Average galvanize thickness reading during the observation was 5.0 mills. During the inspection process, Monnig personnel were also noted performing trial fitting both ends of the rod with the Hex nut. Trial fitting of the rods with the nuts was noted using only their bare hands.

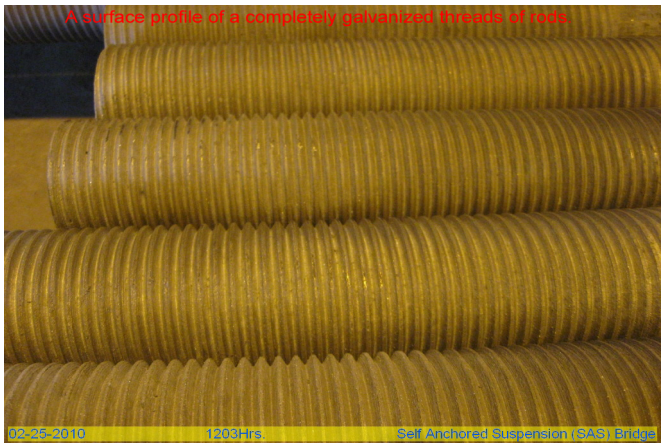

Summary of Conversations:

As stated above.

Comments

This report is for the purpose of determining conformance with the contract documents and is not for the purpose of making repair or fit for purpose recommendations. Should you require recommendations concerning repairs or

remedial efforts please contact SMR Nina Choy, (510-385-5910), who represents the Office of Structural Materials for your project.

Inspected By:	Lizardo,Joselito	Quality Assurance Inspector
Reviewed By:	Levell,Bill	QA Reviewer

DEPARTMENT OF TRANSPORTATION
DIVISION OF ENGINEERING SERVICES
Office of Structural Materials
Quality Assurance and Source Inspection

Bay Area Branch
690 Walnut Ave.St. 150
Vallejo, CA 94592-1133
(707) 649-5453
(707) 649-5493

Contract #: 04-0120F4
Cty: SF/ALA Rte: 80 PM: 13.2/13.9
File #: 99.15

SOURCE INSPECTION REPORT

Resident Engineer: Pursell, Gary
Address: 333 Burma Road
City: Oakland, CA 94607

Report No: SIR-001818
Date Inspected: 26-Feb-2010

Project Name: SAS Superstructure
Prime Contractor: American Bridge/Fluor Enterprises, a JV
Contractor: Monnig Industries

OSM Arrival Time: 930
OSM Departure Time: 1400
Location: Glasgow, MO

Quality Control Contact: Ryan Monnig
Quality Control Present: ☑ Yes ☐ No
Material transfer: ☐ Yes ☐ No ☑ N/A
Sampled Items: ☐ Yes ☐ No ☑ N/A
Stock Transfer: ☐ Yes ☐ No ☑ N/A
OK to Cut: ☐ Yes ☐ No ☑ N/A
Rebar Test Witness: ☐ Yes ☐ No ☑ N/A
Delayed/Cancelled: ☐ Yes ☑ No ☐ N/A
Other: E2 Bearing and Shear Key Double Ended/Threaded Rods Hot Dip Galvanizing
Bridge No: 34-0006
Component: 3" dia. Double Ended/Threaded Rods
Bid Item: 45, 61
Lot No: B231

Summary of Items Observed:

Caltrans Office of Structural Material (OSM) Quality Assurance (QA) Inspector Joselito Lizardo was present as requested to perform observations on the blasting and galvanizing of the various bolt/rod being performed at Monnig Industries, Inc, Glasgow, MO.

This QA randomly observed Monnig personnel continue blasting 20 pieces of 3.0” 4UNC 2A X 21’ – 10.84” and 20 pieces of 3.0” 4UNC 2A X 22’ – 2.81” long Double Ended Rod with 11.81” of useable thread each end per ASTM A354 Gr. BD. The bundles of rods being blasted have trace code of “NCJ 12” and “NCJ 11” respectively. The blasting was performed by Phoenix Industies, Inc a company sub contracted by Monnig Industries. The blasting was also performed by Phoenix Industies, Inc personnel Mr. Gene Eddy. Mr. Eddy was noted using Dupont Starblast (Blasting Abrasive) CP2-156C steel grit. Prior to blasting operations, the rods were noted placed in a rack where the rods could roll freely. The blasting was also performed per bundle (10 rods per bundle) with the trace code hard stamped on one end of the rods. The rods were blasted per Surface Preparation Specification No. 10, Near White Blast Cleaning and were deemed acceptable.

After the blasting operation on each bundle of rods, Monnig Quality Control (QC) Ronnie Wise was present to visually inspect the surface condition of the rods. Monnig QC was noted documenting the blasting process of the rods and also the bundle of rods to be blasted.

Each bundle of rods that has grit blasted was noted immediately brought to the pre flux tank for surface preparation prior to galvanizing. After the pre flux bath, the rods (5 pieces at a time) were then dipped slowly into the galvanizing tank and when they were fully submerged into the molten zinc the rods were shaken slowly to

make sure the rods were properly galvanized including the threads. This operation took around 4 to 5 minutes before the rods got lifted from the tank. The galvanizing tank temperature during the operation was noted 835 degree Fahrenheit.

As soon as the rods were lifted from one side of the rod, excess molten zinc from the thread of the rods were then removed by hand brushing the threads using shoe polish brush that was dipped in water. After completing one side of the rod, the other side was lifted and the same procedure to remove excess molten zinc into the threads was implemented. The rods were then placed in a rack where Monnig personnel were again noted brushing more on the threads of the rods to remove more of the excess galvanizing. After removing all the excess galvanizing, the rods were then brought to another rack wherein the rods were cooled by ambient air. As soon as the rods were cooled to ambient temperature, Monnig Quality Control (QC) Jared Forbes was noted measuring the thickness of the rod galvanizing. The QC was also noted using a thickness gauge named Positest with serial number 51212. Average galvanize thickness reading during the observation was 5.0 mills. During the inspection process, Monnig personnel were also noted performing trial fitting both ends of the rod with the Hex nut. Trial fitting of the rods with the nuts was noted using only their bare hands.

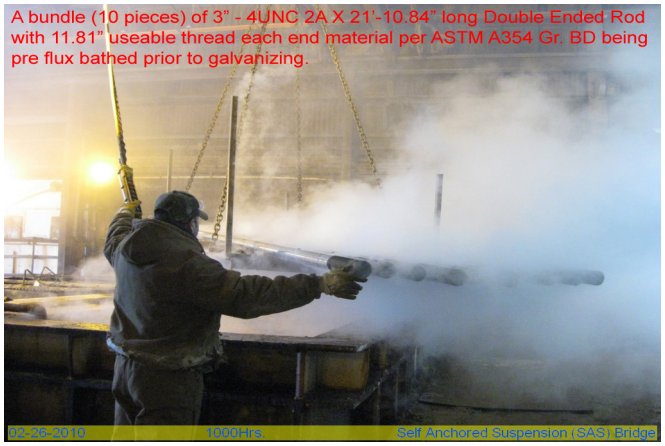

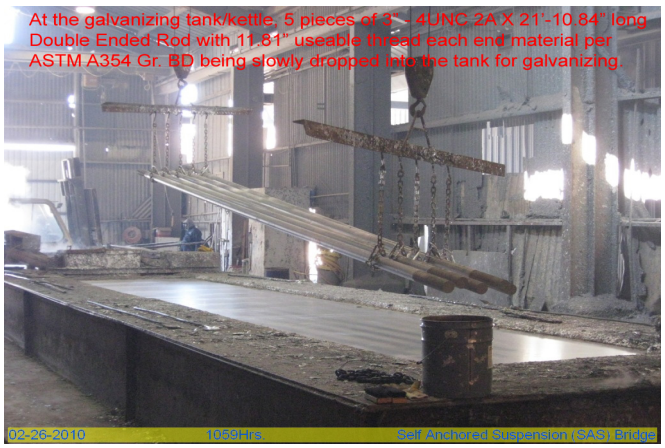

Summary of Conversations:

As stated above.

SOURCE INSPECTION REPORT

Comments

This report is for the purpose of determining conformance with the contract documents and is not for the purpose of making repair or fit for purpose recommendations. Should you require recommendations concerning repairs or remedial efforts please contact SMR Nina Choy, (510-385-5910), who represents the Office of Structural Materials for your project.

Inspected By:	Lizardo,Joselito	Quality Assurance Inspector
Reviewed By:	Levell,Bill	QA Reviewer

DEPARTMENT OF TRANSPORTATION
DIVISION OF ENGINEERING SERVICES
Office of Structural Materials
Quality Assurance and Source Inspection

Bay Area Branch
690 Walnut Ave.St. 150
Vallejo, CA 94592-1133
(707) 649-5453
(707) 649-5493

Contract #: 04-0120F4
Cty: SF/ALA Rte: 80 PM: 13.2/13.9
File #: 99.15

SOURCE INSPECTION REPORT

Resident Engineer: Pursell, Gary
Address: 333 Burma Road
City: Oakland, CA 94607

Report No: SIR-001837
Date Inspected: 01-Mar-2010

Project Name: SAS Superstructure
Prime Contractor: American Bridge/Fluor Enterprises, a JV
Contractor: Monnig Industries

OSM Arrival Time: 930
OSM Departure Time: 1400
Location: Glasgow, MO

Quality Control Contact: Ryan Monnig
Quality Control Present: ☑ Yes ☐ No

Material transfer:	☐ Yes	☐ No	☑ N/A	**Sampled Items:**	☐ Yes ☐ No ☑ N/A
Stock Transfer:	☐ Yes	☐ No	☑ N/A	**OK to Cut:**	☐ Yes ☐ No ☑ N/A
Rebar Test Witness:	☐ Yes	☐ No	☑ N/A	**Delayed/Cancelled:**	☐ Yes ☑ No ☐ N/A

Other: E2 Bearing and Shear Key Double Ended/Threaded Rods Hot Dip Galvanizing
Bridge No: 34-0006
Component: 3" dia. Double Ended/Threaded Rods
Bid Item: 45
Lot No: B231

Summary of Items Observed:

Caltrans Office of Structural Material (OSM) Quality Assurance (QA) Inspector Joselito Lizardo was present as requested to perform observations on the blasting and galvanizing of the various bolt/rod being performed at Monnig Industries, Inc, Glasgow, MO.

This QA randomly observed Monnig personnel continue blasting 4 pieces of 3.0” 4UNC 2A X 22’ – 2.81” long Double Ended Rod with 11.81” of useable thread each end per ASTM A354 Gr. BD. The bundles of rods being blasted have trace code of “NCJ 11”. The blasting was performed by Phoenix Industies, Inc a company sub contracted by Monnig Industries. The blasting was also performed by Phoenix Industies, Inc personnel Mr. Gene Eddy. Mr. Eddy was noted using Dupont Starblast (Blasting Abrasive) CP2-156C steel grit. Prior to blasting operations, the rods were noted placed in a rack where the rods could roll freely. The blasting was also performed on 4 rods with the trace code hard stamped on one end of the rods. The rods were blasted per Surface Preparation Specification No. 10, Near White Blast Cleaning and were deemed acceptable.

After the blasting operation on each bundle of rods, Monnig Quality Control (QC) Ronnie Wise was present to visually inspect the surface condition of the rods. Monnig QC was noted documenting the blasting process of the rods and also the bundle of rods to be blasted.

The four rods that were grit blasted were noted immediately brought to the pre flux tank for surface preparation prior to galvanizing. After the pre flux bath, the rods were then dipped slowly into the galvanizing tank and when they were fully submerged into the molten zinc the rods were shaken slowly to make sure the rods were properly galvanized including the threads. This operation took around 4 to 5 minutes before the rods got lifted from the tank.

The galvanizing tank temperature during the operation was noted 843 degree Fahrenheit.

As soon as the rods were lifted from one side of the rod, excess molten zinc from the thread of the rods were then removed by hand brushing the threads using shoe polish brush that was dipped in water. After completing one side of the rod, the other side was lifted and the same procedure to remove excess molten zinc into the threads was implemented. The rods were then placed in a rack where Monnig personnel were again noted brushing more on the threads of the rods to remove more of the excess galvanizing. After removing all the excess galvanizing, the rods were then brought to another rack wherein the rods were cooled by ambient air. As soon as the rods were cooled to ambient temperature, Monnig Quality Control (QC) Jared Forbes was noted measuring the thickness of the rod galvanizing. The QC was also noted using a thickness gauge named Positest with serial number 51212. Average galvanize thickness reading during the observation was 5.0 mills. During the inspection process, Monnig personnel were also noted performing trial fitting both ends of the rod with the Hex nut. Trial fitting of the rods with the nuts was noted using only their bare hands.

Today, Monnig Industries was able to galvanize only four pieces of rods that have the heat code NCJ 11 due to breakdown of the compressor machine. Monnig thought they could get a replacement by noon but no compressor arrived and so Monnig informed this QA that blasting/galvanizing will continue tomorrow if the compressor replacement will arrive.

Summary of Conversations:

As stated above.

Comments

This report is for the purpose of determining conformance with the contract documents and is not for the purpose of making repair or fit for purpose recommendations. Should you require recommendations concerning repairs or remedial efforts please contact SMR Nina Choy, (510-385-5910), who represents the Office of Structural Materials for your project.

Inspected By:	Lizardo,Joselito	Quality Assurance Inspector
Reviewed By:	Levell,Bill	QA Reviewer

DEPARTMENT OF TRANSPORTATION
DIVISION OF ENGINEERING SERVICES
Office of Structural Materials
Quality Assurance and Source Inspection

Bay Area Branch
690 Walnut Ave.St. 150
Vallejo, CA 94592-1133
(707) 649-5453
(707) 649-5493

Contract #: 04-0120F4
Cty: SF/ALA Rte: 80 PM: 13.2/13.9
File #: 99.15

SOURCE INSPECTION REPORT

Resident Engineer: Pursell, Gary
Address: 333 Burma Road
City: Oakland, CA 94607

Report No: SIR-001852
Date Inspected: 02-Mar-2010

Project Name: SAS Superstructure
Prime Contractor: American Bridge/Fluor Enterprises, a JV
Contractor: Monnig Industries

OSM Arrival Time: 930
OSM Departure Time: 1400
Location: Glasgow, MO

Quality Control Contact: Ryan Monnig
Quality Control Present: ☑ Yes ☐ No

Material transfer:	☐ Yes	☐ No	☑ N/A	**Sampled Items:**	☐ Yes	☐ No	☑ N/A
Stock Transfer:	☐ Yes	☐ No	☑ N/A	**OK to Cut:**	☐ Yes	☐ No	☑ N/A
Rebar Test Witness:	☐ Yes	☐ No	☑ N/A	**Delayed/Cancelled:**	☐ Yes	☑ No	☐ N/A

Other: E2 Bearing and Shear Key Double Ended/Threaded Rods Hot Dip Galvanizing
Bridge No: 34-0006
Component: 3" dia. Double Ended/Threaded Rods
Bid Item: 45
Lot No: B231

Summary of Items Observed:

Caltrans Office of Structural Material (OSM) Quality Assurance (QA) Inspector Joselito Lizardo was present as requested to perform observations on the blasting and galvanizing of the various bolt/rod being performed at Monnig Industries, Inc, Glasgow, MO.

This QA randomly observed blasting of 30 pieces of 3.0” 4UNC 2A X 22’ – 7.73” long Double Ended Rod with 11.81” of useable thread each end per ASTM A354 Gr. BD. The bundles of rods being blasted have trace code of “NCJ 10”. The blasting was performed by Phoenix Industies, Inc a company sub contracted by Monnig Industries. The blasting was also performed by Phoenix Industies, Inc personnel Mr. Gene Eddy. Mr. Eddy was noted using Dupont Starblast (Blasting Abrasive) CP2-156C steel grit. Prior to blasting operations, the rods were noted placed in a rack where the rods could roll freely. The blasting was also performed per bundle (10 rods per bundle) with the trace code hard stamped on one end of the rods. The rods were blasted per Surface Preparation Specification No. 10, Near White Blast Cleaning and were deemed acceptable.

After the blasting operation on each bundle of rods, Monnig Quality Control (QC) Ronnie Wise was present to visually inspect the surface condition of the rods. Monnig QC was noted documenting the blasting process of the rods and also the bundle of rods to be blasted.

Each bundle of rods that has grit blasted was noted immediately brought to the pre flux tank for surface preparation prior to galvanizing. After the pre flux bath, the rods (5 pieces at a time) were then dipped slowly into the galvanizing tank and when they were fully submerged into the molten zinc the rods were shaken slowly to make sure the rods were properly galvanized including the threads. This operation took around 4 to 5 minutes

before the rods got lifted from the tank. The galvanizing tank temperature during the operation was noted 838 degree Fahrenheit.

As soon as the rods were lifted from one side of the rod, excess molten zinc from the thread of the rods were then removed by hand brushing the threads using shoe polish brush that was dipped in water. After completing one side of the rod, the other side was lifted and the same procedure to remove excess molten zinc into the threads was implemented. The rods were then placed in a rack where Monnig personnel were again noted brushing more on the threads of the rods to remove more of the excess galvanizing. After removing all the excess galvanizing, the rods were then brought to another rack wherein the rods were cooled by ambient air. As soon as the rods were cooled to ambient temperature, Monnig Quality Control (QC) Jared Forbes was noted measuring the thickness of the rod galvanizing. The QC was also noted using a thickness gauge named Positest with serial number 51212. Average galvanize thickness reading during the observation was 5.0 mills. During the inspection process, Monnig personnel were also noted performing trial fitting both ends of the rod with the Hex nut. Trial fitting of the rods with the nuts was noted using only their bare hands.

After completing the galvanizing, the rods have cooled down and the trial fit test with the hex nut ("go/no go") were all done, the threads of the rods were wrapped with cardboard and shrink plastic wrapped for protection against damage. These wrapped/bundled rods were then brought to a truck trailer bed where they are stored temporarily while awaiting test results from Caltrans Laboratory.

SOURCE INSPECTION REPORT

Summary of Conversations:

As stated above.

Comments

This report is for the purpose of determining conformance with the contract documents and is not for the purpose of making repair or fit for purpose recommendations. Should you require recommendations concerning repairs or remedial efforts please contact SMR Nina Choy, (510-385-5910),, who represents the Office of Structural Materials for your project.

Inspected By:	Lizardo,Joselito	Quality Assurance Inspector
Reviewed By:	Levell,Bill	QA Reviewer

DEPARTMENT OF TRANSPORTATION
DIVISION OF ENGINEERING SERVICES
Office of Structural Materials
Quality Assurance and Source Inspection

Bay Area Branch
690 Walnut Ave.St. 150
Vallejo, CA 94592-1133
(707) 649-5453
(707) 649-5493

Contract #: 04-0120F4
Cty: SF/ALA Rte: 80 PM: 13.2/13.9
File #: 99.15

SOURCE INSPECTION REPORT

Resident Engineer: Pursell, Gary
Address: 333 Burma Road
City: Oakland, CA 94607

Report No: SIR-001853
Date Inspected: 03-Mar-2010

Project Name: SAS Superstructure
Prime Contractor: American Bridge/Fluor Enterprises, a JV
Contractor: Monnig Industries

OSM Arrival Time: 930
OSM Departure Time: 1400
Location: Glasgow, MO

Quality Control Contact: Ryan Monnig
Quality Control Present: ☑ Yes ☐ No
Material transfer: ☐ Yes ☐ No ☑ N/A
Sampled Items: ☐ Yes ☐ No ☑ N/A
Stock Transfer: ☐ Yes ☐ No ☑ N/A
OK to Cut: ☐ Yes ☐ No ☑ N/A
Rebar Test Witness: ☐ Yes ☐ No ☑ N/A
Delayed/Cancelled: ☐ Yes ☑ No ☐ N/A
Other: E2 Bearing and Shear Key Double Ended/Threaded Rods Hot Dip Galvanizing
Bridge No: 34-0006
Component: 3" dia. Double Ended/Threaded Rods
Bid Item: 45
Lot No: B231

Summary of Items Observed:

Caltrans Office of Structural Material (OSM) Quality Assurance (QA) Inspector Joselito Lizardo was present as requested to perform observations on the blasting and galvanizing of the various bolt/rod being performed at Monnig Industries, Inc, Glasgow, MO.

This QA randomly observed blasting of 34 pieces of 3.0” 4UNC 2A X 22’ – 7.73” long Double Ended Rod with 11.81” of useable thread each end per ASTM A354 Gr. BD. The bundles of rods being blasted have trace code of “NCJ 10”. The blasting was performed by Phoenix Industies, Inc a company sub contracted by Monnig Industries. The blasting was also performed by Phoenix Industies, Inc personnel Mr. Gene Eddy. Mr. Eddy was noted using Dupont Starblast (Blasting Abrasive) CP2-156C steel grit. Prior to blasting operations, the rods were noted placed in a rack where the rods could roll freely. The blasting was also performed per bundle (10 rods per bundle) with the trace code hard stamped on one end of the rods. The rods were blasted per Surface Preparation Specification No. 10, Near White Blast Cleaning and were deemed acceptable.

After the blasting operation on each bundle of rods, Monnig Quality Control (QC) Ronnie Wise was present to visually inspect the surface condition of the rods. Monnig QC was noted documenting the blasting process of the rods and also the bundle of rods to be blasted.

Each bundle of rods that has grit blasted was noted immediately brought to the pre flux tank for surface preparation prior to galvanizing. After the pre flux bath, the rods (5 pieces at a time) were then dipped slowly into the galvanizing tank and when they were fully submerged into the molten zinc the rods were shaken slowly to make sure the rods were properly galvanized including the threads. This operation took around 4 to 5 minutes

before the rods got lifted from the tank. The galvanizing tank temperature during the operation was noted 838 degree Fahrenheit.

As soon as the rods were lifted from one side of the rod, excess molten zinc from the thread of the rods were then removed by hand brushing the threads using shoe polish brush that was dipped in water. After completing one side of the rod, the other side was lifted and the same procedure to remove excess molten zinc into the threads was implemented. The rods were then placed in a rack where Monnig personnel were again noted brushing more on the threads of the rods to remove more of the excess galvanizing. After removing all the excess galvanizing, the rods were then brought to another rack wherein the rods were cooled by ambient air. As soon as the rods were cooled to ambient temperature, Monnig Quality Control (QC) Jared Forbes was noted measuring the thickness of the rod galvanizing. The QC was also noted using a thickness gauge named Positest with serial number 51212. Average galvanize thickness reading during the observation was 5.0 mills. During the inspection process, Monnig personnel were also noted performing trial fitting both ends of the rod with the Hex nut. Trial fitting of the rods with the nuts was noted using only their bare hands.

After completing the galvanizing, the rods have cooled down and the trial fit test with the hex nut ("go/no go") were all done, the threads of the rods were wrapped with cardboard and shrink plastic wrapped for protection against damage. These wrapped/bundled rods were then brought to a truck trailer bed where they are stored temporarily while awaiting test results from Caltrans Laboratory.

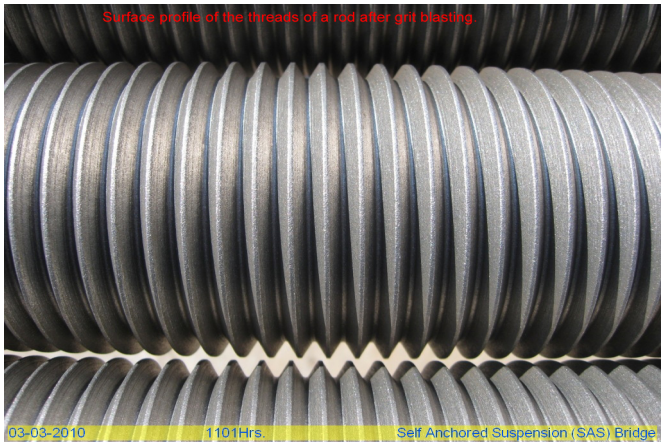

SOURCE INSPECTION REPORT

Summary of Conversations:

As stated above.

Comments

This report is for the purpose of determining conformance with the contract documents and is not for the purpose of making repair or fit for purpose recommendations. Should you require recommendations concerning repairs or remedial efforts please contact SMR Nina Choy, (510-385-5910), who represents the Office of Structural Materials for your project.

Inspected By:	Lizardo,Joselito	Quality Assurance Inspector
Reviewed By:	Levell,Bill	QA Reviewer

DEPARTMENT OF TRANSPORTATION
DIVISION OF ENGINEERING SERVICES
Office of Structural Materials
Quality Assurance and Source Inspection

Bay Area Branch
690 Walnut Ave.St. 150
Vallejo, CA 94592-1133
(707) 649-5453
(707) 649-5493

Contract #: 04-0120F4
Cty: SF/ALA Rte: 80 PM: 13.2/13.9
File #: 99.15

SOURCE INSPECTION REPORT

Resident Engineer: Pursell, Gary
Address: 333 Burma Road
City: Oakland, CA 94607

Report No: SIR-001854
Date Inspected: 05-Mar-2010

Project Name: SAS Superstructure
Prime Contractor: American Bridge/Fluor Enterprises, a JV
Contractor: Monnig Industries, Inc

OSM Arrival Time: 930
OSM Departure Time: 1400
Location: Glasgow, MO

Quality Control Contact: Ryan Monnig
Quality Control Present: ☑ Yes ☐ No
Material transfer: ☑ Yes ☐ No ☐ N/A
Sampled Items: ☑ Yes ☐ No ☐ N/A
Stock Transfer: ☐ Yes ☐ No ☑ N/A
OK to Cut: ☐ Yes ☐ No ☑ N/A
Rebar Test Witness: ☐ Yes ☐ No ☑ N/A
Delayed/Cancelled: ☐ Yes ☑ No ☐ N/A
Other: E2 Bearing and Shear Key All Threaded Rods Hot Dip Galvanizing
Bridge No: 34-0006
Component: 3" and 2" Dia. Threaded Rods
Bid Item: 45, 61
Lot No: B231

Summary of Items Observed:

Caltrans Office of Structural Material (OSM) Quality Assurance (QA) Inspector Joselito Lizardo was present as requested to perform material release on the galvanized 2.0” diameter all threaded rods performed at Monnig Industries in Glasgow, MO. In addition this QA Inspector was also requested to release 2.0” diameter heavy hex nuts that were manufactured by Dyson Corp. and previously green tagged with Caltrans Lot number B206-114-09.

This QA was also requested to perform sampling of 3.0” 4UNC 2A X 22’ – 7.73” long Double Ended Rod with 11. 81” of useable thread each end per ASTM A354 Gr. BD rods that were blasted and galvanized by their company. The 3” diameter with various lengths, threaded both ends rods per ASTM A354 Gr. BD were blasted per Surface Preparation Specification No. 10, Near White Blast Cleaning and galvanized per ASTM A-153. QA has previously monitored the blasting and galvanizing on these mentioned threaded rods and deemed acceptable to the project specification.

This 2” diameter all threaded rods mentioned above are being released by virtue of satisfactory test results from Caltrans Structural Materials Testing Laboratory dated February 1, 2010 (NSH) and February 18, 2010 (NSH2). QA Joselito Lizardo reviewed the Monnig Industries and Dyson Corporation’s Certified Material Test Report/Certificate of Compliance and deemed acceptable.

QA Joselito Lizardo also made random observations of the materials as they were presented. QA Inspector Lizardo noted that the material and documentation appeared to be in general compliance with the contract requirements. QA Inspector Lizardo issued an orange tag with Caltrans QA lot number B231-012-10 for the 2.0” diameter all threaded rod with heat code NSH, B231-013-10 for the 2.0” diameter all threaded rod with heat code

NSH2 and B231-014-10 for the 2” diameter Heavy Hex Nuts.

QA Inspector Lizardo was informed by Mr. Ryan Monnig that the material will be shipped to American Bridge/Fluor AJV, 375 Burmah Road, Oakland, CA.

As for the material sampling, Monnig personnel prepared all the necessary supporting documents that were included in the shipment of the rod/test samples. QA reviewed the documentation and the two sets of samples (1-3” diameter X 47 ¼” long, threaded one end and galvanized and 2-3” diameter X 12” long blank material per set) to be shipped. After finding the documents and samples were in order, QA made a Caltrans Sample Identification Cards (TL-0101) with assigned Caltrans Lot number B231-015-10 and B231-016-10 and were attached to the documentation.

Summary of Conversations:
As stated above.
Comments
This report is for the purpose of determining conformance with the contract documents and is not for the purpose of making repair or fit for purpose recommendations. Should you require recommendations concerning repairs or remedial efforts please contact SMR Nina Choy, (510-385-5910), who represents the Office of Structural Materials for your project.

Inspected By:	Lizardo,Joselito	Quality Assurance Inspector
Reviewed By:	Levell,Bill	QA Reviewer

DEPARTMENT OF TRANSPORTATION
DIVISION OF ENGINEERING SERVICES
Office of Structural Materials
Quality Assurance and Source Inspection

Bay Area Branch
690 Walnut Ave.St. 150
Vallejo, CA 94592-1133
(707) 649-5453
(707) 649-5493

Contract #: 04-0120F4
Cty: SF/ALA Rte: 80 PM: 13.2/13.9
File #: 76.9

REPORT OF INSPECTION OF MATERIAL

Resident Engineer: Pursell, Gary
Address: 333 Burma Road
City: Oakland, CA 94607

Report No: RIM-000019
Date Inspected: 16-Mar-2010

Project Name: SAS Superstructure
Prime Contractor: American Bridge/Fluor Enterprises, a JV
Contractor: Dyson Corp. & Subs

OSM Arrival Time: 1130
OSM Departure Time: 1330
Location: Monnig Industries-Glasgow, M

The following material has been inspected in accordance with Section 6 of the Standard Specifications and found to substantially comply* with contract plans and specifications.

Item	Lot #	Bid Item#	Quantity	Material Description
1	B288-001-10	61	30 Pieces	ASTM A354 Gr BD, 3.00"- 4UNC-2A x 21'-10.84" Threaded Rod Heat M32854
2	B288-002-10	45	32 Pieces	ASTM A354 Gr BD, 3.00"- 4UNC-2A x 22'-2.81" Threaded Rod Heat M32854
3	B288-003-10	45	64 Pieces	ASTM A354 Gr BD, 3.00"- 4UNC-2A x 22'-7.73" Threaded Rod Heat M32854
4	B288-004-10	61	66 Pieces	ASTM A354 Gr BD, 3.00"- 4UNC-2A x 21'-10.84" Threaded Rod Heat M32854
5	B288-006-10	61	384 Pieces	ASTM A563 Grade DH, 3.00"- 4UNC-2B Heavy Hex Spherical Nut Heat M653662

Identification: Orange Tag (1 ea) attached to COC Package
Shipped to: Job Site

Summary of Items Observed:

This report was taken from QA inspector Gary Richmond's Microsoft Word Document TL-29 for the project with QA inspector Michael Foerder performing the input of information to the PMIV.

The (QAI) Inspector reviewed the following documents provided by Monnig Industries for the items mentioned above. The MTR's, the tensile test reports, the magnetic particle testing reports, the galvanizing certificates and the blast reports, all items were in compliance with applicable specifications.

Summary of Conversations:

No significant conversations for this date.

Comments

This report is for the purpose of determining conformance with the contract documents and is not for the purpose of making repair or fit for purpose recommendations. Should you require recommendations concerning repairs or remedial efforts please contact , who represents the Office of Structural Materials for your project.

Inspected By: Foerder, Mike Quality Assurance Inspector

Reviewed By: Levell, Bill QA Reviewer

CERTIFIED MATERIAL TEST REPORT

DYSON CORP.
DN DOMESTIC NUT
53 Freedom Road
Painesville, OH 44077
440-946-3500
440-352-2700 fax

DYSON ORDER#	CUSTOMER ORDER#	ITEM NUMBER	QUANTITY SHIPPED	DATE SHIPPED
L 102215	660110-SA-017 CO13	1 of 12	64 pcs	1/26/10

CUSTOMER
American Bridge / Fluor JV
375 Burma Road
Oakland, CA 94607

USA

DRAWING
E2Bearing&ShearKey AnchorRod

PRODUCT DESCRIPTION
3.00"-4UNC-2A x 22'-7.73" OAL double end rod w/300mm useable thread each end. HDG per ASTM-A153 w/near white metal blast prior to galvanize. (Bid Item 45- E2 Bearing Anchor Rod

SPECIFICATIONS
ASTM A354-07a Grade BD with special provisions 10-1.59, 10-1.60, 10-1.61 std specifications 75-1.05
Caltrans hold points apply to this order

STARTING MATERIAL	DIA	GRADE	QTY	LOT CODE	HEAT NO.	ORIGINAL MILL
Round Bar	3.000	BD	64	NCJ10	M32854	Gerdau Macsteel

The product listed above was manufactured, tested, sampled, and inspected in accordance with the specification, purchase order, and any supplementary requirements and was found to meet those requirements unless otherwise noted.

64 pcs. sent to HDG on 1/26/10

STATE OF CALIFORNIA • DEPARTMENT OF TRANSPORTATION
INSPECTION RELEASE TAG
TL-0624 (REV. 10/03)
STATE LOT NO. B288 003-10
CONTRACT NO. 04-0120F4
RELEASED (*) BY Gary L Rd DATE 3/16/10
FM 92 1554 * Based upon selective sampling

STATE OF CALIFORNIA
STOCK MATERIAL
Dyson & Mundy - Galvanizing
LOT NO. B212-020-10
INSPECTOR'S F4
NAME S. Cruff DATE 1.26.10

Attachments:
Mill Test Report
Mechanical Test Reports
N.D.E. Report
Galvanizing Certification

Deborah A. Smith
Q.A. Admin. Assistant

GERDAU MACSTEEL

5591 MORRILL ROAD
JACKSON, MICHIGAN 49201

CERTIFIED MATERIAL TEST REPORT

CODE NCJ10

CUSTOMER ORDER NUMBER	CUSTOMER PART NUMBER	HEAT NUMBER	WORK ORDER NUMBER	DATE
66015		M32854	228544 101	7/13/09

REPORT TO
QUALITY ASSURANCE
THE DYSON CORPORATION

53 FREEDOM RD.

PAINESVILLE , OH 44077

SHIP TO
JOS. DYSON & SONS INC.

53 FREEDOM RD.

PAINESVILLE , OH 44077

ORDERED

GRADE	SIZE	LENGTH
4140	3."	22' 7 3/4"

CUSTOMER SPECIFICATIONS
ASTM A354-07 GRADE BD; Q&T; (AIM FOR 35-37 ROCKWELL C)

CHEMICAL ANALYSIS

C	Mn	P	S	Si	Ni	Cr	Mo	Cu	Sn	Al
0.43	0.88	0.014	0.033	0.26	0.15	0.93	0.17	0.20	0.009	0.020

V	Ca	Nb
0.010	0.0006	0.003

GRAIN SIZE SPECIFICATION ASTM E112 FINE GRAIN 5-8

HARDNESS SPECIFICATION ASTM E10 AFTER HT TREAT

SURFACE HARDNESS (HRC)
BATCH 1 - 36 (100 bars)
BATCH 2 - 32 (119 bars)
BATCH 3 - 35 (40 bars)
BATCH 4 - 37 (10 bars)

Q.A. REVIEWED
DATE 7/20/09
DYSON

We certify that these data are correct and in compliance with specified requirements.

Gerdau MacSteel Monroe
3000 East Front Street
Monroe, MI 48161

Chris Easter
Quality Assurance Representative

CONTINUED ON PAGE 2

GERDAU MACSTEEL

5591 MORRILL ROAD
JACKSON, MICHIGAN 49201

CERTIFIED MATERIAL TEST REPORT

CODE NCJ10

CUSTOMER ORDER NUMBER	CUSTOMER PART NUMBER	HEAT NUMBER	WORK ORDER NUMBER	DATE
66015		M32854	228544 101	7/13/09

REPORT TO
QUALITY ASSURANCE
THE DYSON CORPORATION

53 FREEDOM RD.

PAINESVILLE , OH 44077

SHIP TO
JOS. DYSON & SONS INC.

53 FREEDOM RD.

PAINESVILLE , OH 44077

ORDERED

GRADE	SIZE	LENGTH
4140	3."	22' 7 3/4"

CUSTOMER SPECIFICATIONS
ASTM A354-07 GRADE BD; Q&T; (AIM FOR 35-37 ROCKWELL C)

HARDENABILITY SPECIFICATION ASTM A255/A304

THEORETICAL

J1	2	3	4	5	6	7	8	9	10	11	12	13	14	15	16	18	20	22	24	26	28	30	32	34
58	58	58	58	58	58	58	56	55	53		51		49		47	46	46		44		41		39	

PHYSICALS SPECIFICATION ASTM E8/A370 AFTER HT TREAT

2.0 IN

TENSILE (KSI) YIELD (KSI) % ELONGATION REDUCTION OF AREA

	Tensile (KSI)	YIELD	ELONGATION	ROA	
BATCH 1 -	157.8	136.1	16	47	(100 bars)
BATCH 2 -	155.6	133.1	17	53	(119 bars)
BATCH 3 -	158.2	137.7	14	40	(40 bars)
BATCH 4 -	153.0	133.0	14.8	44	(10 bars)

REDUCTION RATIO

RATIO= 4.9 TO 1.0

Q.A. REVIEWED
DATE 7/20/09
DYSON

SURFACE INSPECT TO ASTM F788/F788M-02
** MATERIAL 100% MELTED AND MANUFACTURED IN THE U.S.A. BY THE ELECTRIC ARC FURNACE AND CONTINUOUS CASTING METHOD. THE PRODUCT HAS NOT BEEN REPAIRED BY WELDING AND THIS MATERIAL HAS NOT BEEN EXPOSED

We certify that these data are correct and in compliance with specified requirements.

Gerdau MacSteel Monroe
3000 East Front Street
Monroe, MI 48161

Chris Easler
Quality Assurance Representative

CONTINUED ON PAGE 3

GERDAU MACSTEEL

5591 MORRILL ROAD
JACKSON, MICHIGAN 49201

CERTIFIED MATERIAL TEST REPORT

CODE NCJ10

CUSTOMER ORDER NUMBER	CUSTOMER PART NUMBER	HEAT NUMBER	WORK ORDER NUMBER	DATE
66015		M32854	228544 101	7/13/09

REPORT TO
QUALITY ASSURANCE
THE DYSON CORPORATION

53 FREEDOM RD.

PAINESVILLE , OH 44077

SHIP TO
JOS. DYSON & SONS INC.

53 FREEDOM RD.

PAINESVILLE , OH 44077

ORDERED

GRADE	SIZE	LENGTH
4140	3."	22' 7 3/4"

CUSTOMER SPECIFICATIONS
ASTM A354-07 GRADE BD; Q&T; (AIM FOR 35-37 ROCKWELL C)

TO MERCURY OR TO ANY OTHER METAL ALLOY THAT IS LIQUID AT AMBIENT TEMPERATURES DURING PROCESSING OR WHILE IN OUR POSSESSION. **

Q.A. REVIEWED
DATE 7/20/09
DYSON

We certify that these data are correct and in compliance with specified requirements.

Gerdau MacSteel Monroe
3000 East Front Street
Monroe, MI 48161

Chris Easter
Quality Assurance Representative

TTML TENSILE TESTING /METALLURGICAL LABORATORY

A DIVISION OF J.T. ADAMS CO., INC.
4520 WILLOW PARKWAY
CLEVELAND, OHIO 44125
PHONE (216) 641-3290
FAX (216) 641-1223
www.tensile.com

CERTIFIED TEST REPORT

Dyson Corporation
53 Freedom Road
Painesville OH 44077

Job No.: B0-020-935
Date: 1-22-10
Cust. PO#: 70231

Description: 6 samples (1) 3" Dia. x 6" Lg. & (5) 3" Dia. x 1/2" Lg.
SO# 102215 Code# NCJ-10 Heat# M32854

Spec: ASTM A354-07a Grade BD
Caltran Special Provisions 10-1.59, 10-1.60 & 10-1.61; Plus Caltrans Standard Specifications 75-1.05 Applies

TEST RESULTS

	Tensile, ksi	Yield, .2% ksi	Elong., % in 4D	Red. of Area, %	Hardness, HRC
Req. (Min.):	140	115	14	40	31 – 39
	154	132	16	55	34
					34
					35
					34
					35

Test Method: ASTM A370-09a

The above **conforms** to specifications listed.

This material tested in accordance with the Tensile Testing's Quality System Manual dated 2/15/07 Rev. D as audited and approved by Dyson. The reported results represent the actual attributes of the material tested and indicate full compliance with all applicable specification and contract requirements. We certify that the foregoing is a true copy of the data resulting from tests performed in the laboratory.

Authorized Signature

Timothy J. Adams, President

ACCREDITED
Cert No. 0161

This Report May Not Be Reproduced Except In Full
This report represents Tensile Testing interpretation of the results obtained from the test and is not to be construed as a Guaranty or Warranty of the condition of the materials tested. Tensile Testing shall not be held liable for misinterpretation of conditions, loss, damage, injury or death arising from or attributable to delay preceding a test or subsequent to performance of a test.

STORK
Materials Technology

Stork Herron Testing Laboratories

1/12/2010

Steve Marsh
Dyson Corp.
53 Freedom Road
53 Freedom Rd
PAINESVILLE, OH 44077-1232

Date Received: 1/7/2010

Test Report No.: DYS006-10-01-94359-1

Material Testing and Non-Destructive Testing

5405 E. Schaaf Road
Cleveland, OH 44131
USA

Telephone : (216) 524-1450
Fax : (216) 524-1459
Website : www.storkherron.com

TEST REPORT

P.O. No.: 70023

Sample Description: One (1) Lot (5 Pcs) 3" - 4 UNC X 22' 7 3/4" Long Double End Threaded Rods, Per ASTM A490-08a, ASTM F788, Caltran Special Provisions 10-1.59, 10-1.60 and 10-1.61, 75-1.05 apply to this work, On-Site Testing 1-7-10, Job#: L 102215

MAGNETIC PARTICLE INSPECTION REPORT

Standard:	ASTM F788-06	
Procedure:	SOP 42.03	
METHOD		
☐ Dry	☒ Wet	
PARTICLES		
Magnaflux Particles: ☐ 8A Red ☐ 14A ☐ 3A Black ☒ 14AM ☐ 1 Gray ☐ Other Batch No. 07E06K	**Part Preparation:** ☒ None Required ☐ Solvent Clean ☐ Grinding ☐ Other	**Wet Particle Carrier:** ☐ Magnaflux Carrier II ☒ Pre Mixed ☐ Concentration MI Batch No.
CURRENT		
☐ AC	☐ FWDC	
☐ Central Conductor (AMPS)	☐ Head Shot (AMPS)	
☐ Coil (AMPS)	☐ Prods (AMPS/Spacing)	
Field Verified by: ☒ Pie Gage ☐ QQI ☐ Hall Effect Probe		
EQUIPMENT		
☐ Magnaflux H-720 S/N: 81471 Cal Due Date:		
☒ Yoke ☒ AC ☐ DC S/N: 9438 Spacing: 4" – 8" Cal Due Date: 2/11/10		

The above services were performed in accordance with Herron Testing Laboratories' Quality Assurance Program Edition 1, Revision 3 dated 6/30/09. Information and statements in this report are derived from material, information and/or specifications furnished by the client and exclude any expressed or implied warranties as to the fitness of the material tested or analyzed for any particular purpose or use. This report is the confidential property of our client and may not be used for advertising purposes. This report shall not be reproduced except in full, without written approval of this laboratory. The recording of false, fictitious or fraudulent statements or entries on this document may be punished as a felony under Federal Statutes.
Sample remnants are held for a minimum of 6 months following issuance of test results, at which point they will be discarded unless notified in writing by the client. This material was not contaminated by mercury or chlorinated solvents during the handling and processing at Stork-Herron Testing Laboratories facilities.

Paula Tesar

Paula Tesar
Quality Administrator

STORK
Materials Technology

Stork Herron Testing Laboratories

1/12/2010

Steve Marsh
Dyson Corp.
53 Freedom Road
53 Freedom Rd
PAINESVILLE, OH 44077-1232

Date Received: 1/7/2010

Test Report No.: DYS006-10-01-94359-1

Material Testing and Non-Destructive Testing

5405 E. Schaaf Road
Cleveland, OH 44131
USA

Telephone : (216) 524-1450
Fax : (216) 524-1459
Website : www.storkherron.com

TEST REPORT

P.O. No.: 70023

INSPECTION RESULTS	
Quantity	**Results**
5 PCS **NCJ10** **3"-4UNC-2AX22'-7.73"**	**ACCEPTABLE**
Comments: Marking Requirements: Demag and post cleaning requirements:	
Inspected by: Matthew Novak	Certification: ASNT-SNT-TC-1A Level ☐ II ☒ III

The reported results represent the actual attributes of the material tested and indicate full compliance with all applicable specification and contract requirements.

EXPORT CONTROLLED (ITAR)

THE TECHNICAL DATA AND / OR MATERIALS ASSOCIATED WITH THIS ORDER FALLS WITHIN THE DEFINITION OF THE INTERNATIONAL TRAFFIC IN ARMS REGULATIONS (ITAR) AND IS SUBJECT TO THE EXPORT CONTROL LAWS OF THE U.S. GOVERNMENT. TRANSFER OF THIS DATA BY ANY MEANS TO A FOREIGN PERSON OR FOREIGN ENTITY, WHETHER IN THE UNITED STATES OR ABROAD, WITHOUT AN EXPORT LICENSE, ITAR EXEMPTION OR OTHER APPROVAL FROM THE U.S. DEPARTMENT OF STATE, IS PROHIBITED.

The above services were performed in accordance with Herron Testing Laboratories' Quality Assurance Program Edition 1, Revision 3 dated 6/30/09. Information and statements in this report are derived from material, information and/or specifications furnished by the client and exclude any expressed or implied warranties as to the fitness of the material tested or analyzed for any particular purpose or use. This report is the confidential property of our client and may not be used for advertising purposes. This report shall not be reproduced except in full, without written approval of this laboratory. The recording of false, fictitious or fraudulent statements or entries on this document may be punished as a felony under Federal Statutes.
Sample remnants are held for a minimum of 6 months following issuance of test results, at which point they will be discarded unless notified in writing by the client. This material was not contaminated by mercury or chlorinated solvents during the handling and processing at Stork-Herron Testing Laboratories facilities.

Paula Tesar

Paula Tesar
Quality Administrator

Phoenix Manufacturing, Inc.
P.O. BOX 330
26666 Von Holten Rd.
Cole Camp, MO. 65325
660-668-2611
660-668-3160 (fax)

SSPC-SP10 Near White Metal Blast

Near-White Blast Cleaning - Removal of nearly all mill scale, rust, rust scale, paint, or foreign matter by the use of abrasives propelled through nozzles or by centrifugal wheels, to the degree hereafter specified A Near-White Blast Cleaned Surface Finish is defined as one from which all oil, grease, dirt, mill scale, rust, corrosion products, oxides, paint or other foreign matter have been completely removed from the surface except for very light shadows, very slight streaks or slight discolorations caused by rust stain, mill scale oxides, or light, tight residues of paint or coating that may remain. At least 95 percent of each square inch of surface area shall be free of all visible residues, and the remainder shall be limited to the light discoloration mentioned above

DYSON CORP PURCHASE ORDER 69398

3 EA NSH 2" 4 1/2 UNC 2A x 1105MM
REPLACEMENT PARTS

PURCHASE ORDER 70634

66 EA 3" -4UNC 2A x 21'- 10.84"

PURCHASE ORDER 70345

64 EA 3" -4unc 2A x 22' - 7.73"

64 EA 3" -4UNC 2A x 47.25"

PURCHASE ORDER 70549

32 EA 3" -4UNC 2A x 22' -2.81"

30 EA 3" -4UNC 2A x 21' -10.84"

1 EA 3" -4UNC 2A x 47.25"

Monnig Industries, Inc.

HOT DIP & MECHANICAL GALVANIZING
P.O. BOX 98
GLASGOW, MO 65254
PH. 660-338-2242 FAX: 660-338-5199

MARCH 5, 2010

DYSON CORPORATION
50 FREEDOM ROAD
PAINESVILLE, OH 44077

RE: GALVANIZING CERTIFICATE
P.O. 70345 CALTRAN RODS
64 PCS 3.00" -4UNC 2A X 22'- 7.73" LG DBL END ROD W/ 11.81" OF USEABLE THREAD EA. END
1 PC 3.00"-4UNC 2A X 47.25" SINGLE END ROD W/ 11.81" OF USEABLE THREAD ONE END

THIS WILL CERTIFY THAT THE MATERIAL GALVANIZED ON THE ABOVE JOB MEETS OR EXCEEDS THE MINIMUM REQUIREMENTS OF ASTM A-153 SPECIFICATIONS.

MILL READINGS

4.2	5.2	4.5	6.0
5.0	6.0	7.0	5.5
5.9	5.0	5.2	4.2

PATRICIA S. WESTHUES
NOTARY PUBLIC STATE OF MISSOURI
HOWARD COUNTY
MY COMMISSION EXP. APR. 18, 2012

John Monnig
JOHN MONNIG, PRESIDENT

Patricia S Westhues
PATRICIA S. WESTHUES,
NOTARY PUBLIC

CERTIFIED MATERIAL TEST REPORT

DYSON CORP.
DN DOMESTIC NUT
53 Freedom Road
Painesville, OH 44077
440-946-3500
440-352-2700 fax

DYSON ORDER#	CUSTOMER ORDER#	ITEM NUMBER	QUANTITY SHIPPED	DATE SHIPPED
L 102217	660110-SA-017 CO13	3 of 12	30 pcs	

CUSTOMER
American Bridge / Fluor JV
375 Burma Road
Oakland, CA 94607

USA

DRAWING
E2Bearing&ShearKey AnchorRod

PRODUCT DESCRIPTION
3.00"-4UNC-2A x 21'-10.84" OAL double end rod w/300mm useable thread each end. HDG per ASTM-A153 w/near white metal blast prior to galvanize. (Bid Item 61- E2 Shear Key Anchor Rod

SPECIFICATIONS
ASTM A354-07a Grade BD with special provisions 10-1.59, 10-1.60, 10-1.61 std specifications 75-1.05 Caltrans hold points apply to this order

STARTING MATERIAL	DIA	GRADE	QTY	LOT CODE	HEAT NO.	ORIGINAL MILL
Round Bar	3.000	BD	30	NCJ12	M32854	Gerdau Macsteel

The product listed above was manufactured, tested, sampled, and inspected in accordance with the specification, purchase order, and any supplementary requirements and was found to meet those requirements unless otherwise noted.

PLUS 2 pcs. 12" LG. TEST DROPS
PLUS 1 pc. 47.25" LG. DA SAMPLE THREADED ONE END ONLY.

STATE OF CALIFORNIA
STOCK MATERIAL
From: Dyson To: Monnig Ind. MO
LOT NO. B208-016-10
INSPECTOR'S
NAME SB DATE 2-8-10

Attachments:
Mill Test Report ✓
Mechanical Test Reports ✓ (S)
N.D.E. Report ✓
Galvanizing Certification

STATE OF CALIFORNIA • DEPARTMENT OF TRANSPORTATION
INSPECTION RELEASE TAG
TL-0624 (REV. 10/03)
STATE LOT NO. B288 001-10
CONTRACT NO. 04-0120F4
RELEASED (*) BY Day 2 Rel
DATE 3/16/10
EM 92 1654 (1)

Deborah A. Smith
A. Admin. Assistant

LARGE DIAMETER FASTENERS & FORG

CLEAR SPECIFICATIONS

GERDAU MACSTEEL

5591 MORRILL ROAD
JACKSON, MICHIGAN 49201

CERTIFIED MATERIAL TEST REPORT

CODE NCJ12

CUSTOMER ORDER NUMBER	CUSTOMER PART NUMBER	HEAT NUMBER	WORK ORDER NUMBER	DATE
6015		M32854	228544 101	7/13/09

REPORT TO
QUALITY ASSURANCE
THE DYSON CORPORATION

53 FREEDOM RD.

PAINESVILLE , OH 44077

SHIP TO
JOS. DYSON & SONS INC.

53 FREEDOM RD.

PAINESVILLE , OH 44077

ORDERED

GRADE	SIZE	LENGTH
4140	3."	22' 7 3/4"

CUSTOMER SPECIFICATIONS
ASTM A354-07 GRADE BD; Q&T; (AIM FOR 35-37 ROCKWELL C)

CHEMICAL ANALYSIS

C	Mn	P	S	Si	Ni	Cr	Mo	Cu	Sn	Al
0.43	0.88	0.014	0.033	0.26	0.15	0.93	0.17	0.20	0.009	0.020

V	Ca	Nb
0.010	0.0006	0.003

GRAIN SIZE SPECIFICATION ASTM E112 FINE GRAIN 5-8

HARDNESS SPECIFICATION ASTM E10 AFTER HT TREAT

SURFACE HARDNESS (HRC)
BATCH 1 - 36 (100 bars)
BATCH 2 - 32 (119 bars)
BATCH 3 - 35 (40 bars)
BATCH 4 - 37 (10 bars)

Q.A. REVIEWED
DATE 7/20/09
DYSON

We certify that these data are correct and in compliance with specified requirements.

Chris Easter
Quality Assurance Representative

Gerdau MacSteel Monroe
3000 East Front Street
Monroe, MI 48161

GERDAU MACSTEEL

5591 MORRILL ROAD
JACKSON, MICHIGAN 49201

CERTIFIED MATERIAL TEST REPORT

CODE NCJ12

CUSTOMER ORDER NUMBER	CUSTOMER PART NUMBER	HEAT NUMBER	WORK ORDER NUMBER	DATE
66015		M32854	228544 101	7/13/09

REPORT TO
QUALITY ASSURANCE
THE DYSON CORPORATION

53 FREEDOM RD.

PAINESVILLE , OH 44077

SHIP TO
JOS. DYSON & SONS INC.

53 FREEDOM RD.

PAINESVILLE , OH 44077

ORDERED

GRADE	SIZE	LENGTH
4140	3."	22' 7 3/4"

CUSTOMER SPECIFICATIONS

ASTM A354-07 GRADE BD; Q&T; (AIM FOR 35-37 ROCKWELL C)

HARDENABILITY SPECIFICATION ASTM A255/A304

THEORETICAL

J1	2	3	4	5	6	7	8	9	10	11	12	13	14	15	16	18	20	22	24	26	28	30	32	34
58	58	58	58	58	58	58	56	55	53		51		49		47	46	46		44		41		39	

PHYSICALS SPECIFICATION ASTM E8/A370 AFTER HT TREAT

2.0 IN

TENSILE (KSI) YIELD (KSI) % ELONGATION REDUCTION OF AREA

	Tensile (KSI)	YIELD	ELONGATION	ROA	
BATCH 1 -	157.8	136.1	16	47	(100 bars)
BATCH 2 -	155.6	133.1	17	53	(119 bars)
BATCH 3 -	158.2	137.7	14	40	(40 bars)
BATCH 4 -	153.0	133.0	14.8	44	(10 bars)

REDUCTION RATIO

RATIO= 4.9 TO 1.0

Q.A. REVIEWED
DATE 7/20/09
DYSON

SURFACE INSPECT TO ASTM F788/F788M-02

** MATERIAL 100% MELTED AND MANUFACTURED IN THE U.S.A. BY THE ELECTRIC ARC FURNACE AND CONTINUOUS CASTING METHOD. THE PRODUCT HAS NOT BEEN REPAIRED BY WELDING AND THIS MATERIAL HAS NOT BEEN EXPOSED

We certify that these data are correct and in compliance with specified requirements.

Gerdau MacSteel Monroe
3000 East Front Street
Monroe, MI 48161

Quality Assurance Representative

CONTINUED ON PAGE 3

GERDAU MACSTEEL

5591 MORRILL ROAD
JACKSON, MICHIGAN 49201

CERTIFIED MATERIAL TEST REPORT

CODE NCJ12

CUSTOMER ORDER NUMBER	CUSTOMER PART NUMBER	HEAT NUMBER	WORK ORDER NUMBER	DATE
66015		M32854	228544 101	7/13/09

REPORT TO
QUALITY ASSURANCE
THE DYSON CORPORATION

53 FREEDOM RD.

PAINESVILLE , OH 44077

SHIP TO
JOS. DYSON & SONS INC.

53 FREEDOM RD.

PAINESVILLE , OH 44077

ORDERED

GRADE	SIZE	LENGTH
4140	3."	22' 7 3/4"

CUSTOMER SPECIFICATIONS

ASTM A354-07 GRADE BD; Q&T; (AIM FOR 35-37 ROCKWELL C)

TO MERCURY OR TO ANY OTHER METAL ALLOY THAT IS LIQUID AT AMBIENT TEMPERATURES DURING PROCESSING OR WHILE IN OUR POSSESSION. **

Q.A. REVIEWED
DATE 7/20/09
DYSON

We certify that these data are correct and in compliance with specified requirements.

Gerdau MacSteel Monroe
3000 East Front Street
Monroe, MI 48161

Chief Inspector

Director of Quality Assurance Representative

A DIVISION OF J.T. ADAMS CO., INC.
4520 WILLOW PARKWAY
CLEVELAND, OHIO 44125
PHONE (216) 641-3290
FAX (216) 641-1223
www.tensile.com

TTML TENSILE TESTING
METALLURGICAL LABORATORY

CERTIFIED TEST REPORT

Dyson Corporation
53 Freedom Road
Painesville OH 44077

Job No.: B0-026-232
Date: 1-29-10
Cust. PO#: 70335

Description: 6 samples (1) 3" Dia. x 6" Lg. & (5) 3" Dia. x 1/2" Lg.
SO# L102217 Code# NCJ-12 Heat# M32854

Spec: ASTM A354-07a Grade BD
Caltran Special Provisions 10-1.59, 10-1.60 & 10-1.61; Plus Caltrans Standard Specifications 75-1.05 Applies

TEST RESULTS

	Tensile, ksi	Yield, .2% ksi	Elong., % in 4D	Red. of Area, %	Hardness, HRC
Req. (Min.):	140	115	14	40	31 – 39
	159	141	16	55	33
					33
					33
					34
					34

Test Method: ASTM A370-09a

The above **conforms** to specifications listed.

This material tested in accordance with the Tensile Testing's Quality System Manual dated 2/15/07 Rev. D as audited and approved by Dyson. The reported results represent the actual attributes of the material tested and indicate full compliance with all applicable specification and contract requirements. We certify that the foregoing is a true copy of the data resulting from tests performed in the laboratory.

Authorized Signature

Timothy J. Adams, President

ACCREDITED
Cert No. 0161

This Report May Not Be Reproduced Except In Full
This report represents Tensile Testing interpretation of the results obtained from the test and is not to be construed as a Guaranty or Warranty of the condition of the materials tested. Tensile Testing shall not be held liable for misinterpretation of conditions, loss, damage, injury or death arising from or attributable to delay preceding a test or subsequent to performance of a test.

STORK
Materials Technology

Stork Herron Testing Laboratories

1/12/2010

Steve Marsh
Dyson Corp.
53 Freedom Road
53 Freedom Rd
PAINESVILLE, OH 44077-1232

Date Received: 1/7/2010

Test Report No.: DYS006-10-01-94359-2

Material Testing and Non-Destructive Testing

5405 E. Schaaf Road
Cleveland, OH 44131
USA

Telephone : (216) 524-1450
Fax : (216) 524-1459
Website : www.storkherron.com

TEST REPORT

P.O. No.: 70023

Sample Description: One (1) Lot (6 Pcs) 3" - 4 UNC X 21' 10 7/8" Long Double End Threaded Rods, Per ASTM A490-08a, ASTM F788, Caltran Special Provisions 10-1.59, 10-1.60 and 10-1.61, 75-1.05 apply to this work, On-Site Testing 1-7-10, Job#: L 102217

MAGNETIC PARTICLE INSPECTION REPORT

Standard:	ASTM F788-06	
Procedure:	SOP 42.03	
METHOD		
☐ Dry	☒ Wet	
PARTICLES		
Magnaflux Particles: ☐ 8A Red ☐ 14A ☐ 3A Black ☒ 14AM ☐ 1 Gray ☐ Other Batch No. 07E06K	**Part Preparation:** ☒ None Required ☐ Solvent Clean ☐ Grinding ☐ Other	**Wet Particle Carrier:** ☐ Magnaflux Carrier II ☒ Pre Mixed ☐ Concentration MI Batch No.
CURRENT		
☐ AC	☐ FWDC	
☐ Central Conductor (AMPS)	☐ Head Shot (AMPS)	
☐ Coil (AMPS)	☐ Prods (AMPS/Spacing)	
Field Verified by: ☒ Pie Gage ☐ QQI ☐ Hall Effect Probe		
EQUIPMENT		
☐ Magnaflux H-720 S/N: 81471 Cal Due Date:		
☒ Yoke ☒ AC ☐ DC S/N: 9438 Spacing: 4" – 8" Cal Due Date: 2/11/10		

The above services were performed in accordance with Herron Testing Laboratories' Quality Assurance Program Edition 1, Revision 3 dated 6/30/09. Information and statements in this report are derived from material, information and/or specifications furnished by the client and exclude any expressed or implied warranties as to the fitness of the material tested or analyzed for any particular purpose or use. This report is the confidential property of our client and may not be used for advertising purposes. This report shall not be reproduced except in full, without written approval of this laboratory. The recording of false, fictitious or fraudulent statements or entries on this document may be punished as a felony under Federal Statutes.
Sample remnants are held for a minimum of 6 months following issuance of test results, at which point they will be discarded unless notified in writing by the client. This material was not contaminated by mercury or chlorinated solvents during the handling and processing at Stork-Herron Testing Laboratories facilities.

Paula Tesar

Paula Tesar
Quality Administrator

STORK
Materials Technology

Stork Herron Testing Laboratories

1/12/2010

Steve Marsh
Dyson Corp.
53 Freedom Road
53 Freedom Rd
PAINESVILLE, OH 44077-1232

Date Received: 1/7/2010

Test Report No.: DYS006-10-01-94359-2

Material Testing and Non-Destructive Testing

5405 E. Schaaf Road
Cleveland, OH 44131
USA

Telephone : (216) 524-1450
Fax : (216) 524-1459
Website : www.storkherron.com

TEST REPORT

P.O. No.: 70023

INSPECTION RESULTS	
Quantity	**Results**
6 PCS **NCJ12** **3"-4UNC-2AX21'-10.84"**	**ACCEPTABLE**
Comments: Marking Requirements: Demag and post cleaning requirements:	
Inspected by: Matthew Novak	Certification: ASNT-SNT-TC-1A Level ☐ II ☒ III

The reported results represent the actual attributes of the material tested and indicate full compliance with all applicable specification and contract requirements.

EXPORT CONTROLLED (ITAR)

THE TECHNICAL DATA AND / OR MATERIALS ASSOCIATED WITH THIS ORDER FALLS WITHIN THE DEFINITION OF THE INTERNATIONAL TRAFFIC IN ARMS REGULATIONS (ITAR) AND IS SUBJECT TO THE EXPORT CONTROL LAWS OF THE U.S. GOVERNMENT. TRANSFER OF THIS DATA BY ANY MEANS TO A FOREIGN PERSON OR FOREIGN ENTITY, WHETHER IN THE UNITED STATES OR ABROAD, WITHOUT AN EXPORT LICENSE, ITAR EXEMPTION OR OTHER APPROVAL FROM THE U.S. DEPARTMENT OF STATE, IS PROHIBITED.

The above services were performed in accordance with Herron Testing Laboratories' Quality Assurance Program Edition 1, Revision 3 dated 6/30/09. Information and statements in this report are derived from material, information and/or specifications furnished by the client and exclude any expressed or implied warranties as to the fitness of the material tested or analyzed for any particular purpose or use. This report is the confidential property of our client and may not be used for advertising purposes. This report shall not be reproduced except in full, without written approval of this laboratory. The recording of false, fictitious or fraudulent statements or entries on this document may be punished as a felony under Federal Statutes.
Sample remnants are held for a minimum of 6 months following issuance of test results, at which point they will be discarded unless notified in writing by the client. This material was not contaminated by mercury or chlorinated solvents during the handling and processing at Stork-Herron Testing Laboratories facilities.

Paula Tesar

Paula Tesar
Quality Administrator

Phoenix Manufacturing, Inc.
P.O. BOX 330
26666 Von Holten Rd.
Cole Camp, MO. 65325
660-668-2611
660-668-3160 (fax)

SSPC-SP10 Near White Metal Blast

Near-White Blast Cleaning - Removal of nearly all mill scale, rust, rust scale, paint, or foreign matter by the use of abrasives propelled through nozzles or by centrifugal wheels, to the degree hereafter specified A Near-White Blast Cleaned Surface Finish is defined as one from which all oil, grease, dirt, mill scale, rust, corrosion products, oxides, paint or other foreign matter have been completely removed from the surface except for very light shadows, very slight streaks or slight discolorations caused by rust stain, mill scale oxides, or light, tight residues of paint or coating that may remain. At least 95 percent of each square inch of surface area shall be free of all visible residues, and the remainder shall be limited to the light discoloration mentioned above

DYSON CORP PURCHASE ORDER 69398
3 EA NSH 2" 4 1/2 UNC 2A x 1105MM
REPLACEMENT PARTS

PURCHASE ORDER 70634
66 EA 3" -4UNC 2A x 21'- 10.84"

PURCHASE ORDER 70345
64 EA 3" -4unc 2A x 22' - 7.73"

64 EA 3" -4UNC 2A x 47.25"

PURCHASE ORDER 70549

32 EA 3" -4UNC 2A x 22' -2.81"

30 EA 3" -4UNC 2A x 21' -10.84"

1 EA 3" -4UNC 2A x 47.25"

Monnig Industries, Inc.

HOT DIP & MECHANICAL GALVANIZING
P.O. BOX 98
GLASGOW, MO 65254
PH. 660-338-2242 FAX: 660-338-5199

MARCH 5, 2010

DYSON CORPORATION
50 FREEDOM ROAD
PAINESVILLE, OH 44077

RE: GALVANIZING CERTIFICATE
P.O. 70549 CALTRAN RODS
32 PCS 3.00" -4UNC 2A X 22'- 2.81" LG DBL END ROD W/ 11.81" OF USEABLE THREAD EA. END
33 PCS 3.00"-4UNC 2A X 21'- 10.84" LG DBL END ROD W/ 11.81" OF USEABLE THREAD EA. END
1 PC 3.00"-4UNC 2A X 47.25" SINGLE END ROD W/ 11.81" OF USEABLE THREAD ONE END

THIS WILL CERTIFY THAT THE MATERIAL GALVANIZED ON THE ABOVE JOB MEETS OR EXCEEDS THE MINIMUM REQUIREMENTS OF ASTM A-153 SPECIFICATIONS.

MILL READINGS

4.5	5.5	4.3	6.0
4.5	5.5	5.2	7.5
5.5	4.5	3.5	4.0

John Monnig
JOHN MONNIG, PRESIDENT

PATRICIA S. WESTHUES
NOTARY PUBLIC STATE OF MISSOURI
HOWARD COUNTY
MY COMMISSION EXP. APR. 18, 2012

Patricia S. Westhues
PATRICIA S. WESTHUES,
NOTARY PUBLIC

CERTIFIED MATERIAL TEST REPORT

DYSON CORP.
DIN DOMESTIC NUT
53 Freedom Road
Painesville, OH 44077
440-946-3500
440-352-2700 fax

DYSON ORDER#	CUSTOMER ORDER#	ITEM NUMBER	QUANTITY SHIPPED	DATE SHIPPED
L 102216	660110-SA-017 CO13	2 of 12	32 pcs	

CUSTOMER
American Bridge / Fluor JV
375 Burma Road
Oakland, CA 94607

USA

DRAWING
E2Bearing&ShearKey AnchorRod

PRODUCT DESCRIPTION
3.00"-4UNC-2A x 22'-2.81" OAL double end rod w/300mm useable thread each end. HDG per ASTM-A153 w/near white metal blast prior to galvanize. (Bid Item 45- E2 Bearing Anchor Rod

SPECIFICATIONS
ASTM A354-07a Grade BD with special provisions 10-1.59, 10-1.60, 10-1.61 std specifications 75-1.05 Caltrans hold points apply to this order

STARTING MATERIAL	DIA	GRADE	QTY	LOT CODE	HEAT NO.	ORIGINAL MILL
Round Bar	3.000	BD	32	NCJ11	M32854	Gerdau Macsteel

The product listed above was manufactured, tested, sampled, and inspected in accordance with the specification, purchase order, and any supplementary requirements and was found to meet those requirements unless otherwise noted.

STATE OF CALIFORNIA • DEPARTMENT OF TRANSPORTATION
INSPECTION RELEASE TAG
TL-0624 (REV. 10/03)

STATE LOT NO. B288 002-10
CONTRACT NO. 04-0120F4
RELEASED (*) BY Bay 2 RD DATE 3/16/10
FM 92 1554 * Based upon selective sampling

STATE OF CALIFORNIA
STOCK MATERIAL
From: Dyson TO: Monnig Ind. MO
LOT NO. B208-017-10
INSPECTOR'S
NAME SB DATE 2-8-10

Attachments:
Mill Test Report ✓
Mechanical Test Reports ✓
N.D.E. Report ✓
Galvanizing Certification

Deborah A. Smith
Q.A. Admin. Assistant

GERDAU MACSTEEL

5591 MORRILL ROAD
JACKSON, MICHIGAN 49201

CERTIFIED MATERIAL TEST REPORT

CODE NCJ11

CUSTOMER ORDER NUMBER	CUSTOMER PART NUMBER	HEAT NUMBER	WORK ORDER NUMBER	DATE
66015		M32854	228544 101	7/13/09

REPORT TO
QUALITY ASSURANCE
THE DYSON CORPORATION

53 FREEDOM RD.

PAINESVILLE , OH 44077

SHIP TO
JOS. DYSON & SONS INC.

53 FREEDOM RD.

PAINESVILLE , OH 44077

ORDERED

GRADE	SIZE	LENGTH
4140	3."	22' 7 3/4"

CUSTOMER SPECIFICATIONS
ASTM A354-07 GRADE BD; Q&T; (AIM FOR 35-37 ROCKWELL C)

CHEMICAL ANALYSIS

C	Mn	P	S	Si	Ni	Cr	Mo	Cu	Sn	Al
0.43	0.88	0.014	0.033	0.26	0.15	0.93	0.17	0.20	0.009	0.020

V	Ca	Nb
0.010	0.0006	0.003

GRAIN SIZE SPECIFICATION ASTM E112 FINE GRAIN 5-8

HARDNESS SPECIFICATION ASTM E10 AFTER HT TREAT

SURFACE HARDNESS (HRC)
BATCH 1 - 36 (100 bars)
BATCH 2 - 32 (119 bars)
BATCH 3 - 35 (40 bars)
BATCH 4 - 37 (10 bars)

Q.A. REVIEWED
DATE 7/20/09
DYSON

We certify that these data are correct and in compliance with specified requirements.

Gerdau MacSteel Monroe
3000 East Front Street
Monroe, MI 48161

Chris Easter
Quality Assurance Representative

CONTINUED ON PAGE 2

GERDAU MACSTEEL

5591 MORRILL ROAD
JACKSON, MICHIGAN 49201

CERTIFIED MATERIAL TEST REPORT

CODE NCJ11

CUSTOMER ORDER NUMBER	CUSTOMER PART NUMBER	HEAT NUMBER	WORK ORDER NUMBER	DATE
66015		M32854	228544 101	7/13/09

REPORT TO
QUALITY ASSURANCE
THE DYSON CORPORATION

53 FREEDOM RD.

PAINESVILLE , OH 44077

SHIP TO
JOS. DYSON & SONS INC.

53 FREEDOM RD.

PAINESVILLE , OH 44077

ORDERED

GRADE	SIZE	LENGTH
4140	3."	22' 7 3/4"

CUSTOMER SPECIFICATIONS

ASTM A354-07 GRADE BD; Q&T; (AIM FOR 35-37 ROCKWELL C)

HARDENABILITY SPECIFICATION ASTM A255/A304

THEORETICAL

J1	2	3	4	5	6	7	8	9	10	11	12	13	14	15	16	18	20	22	24	26	28	30	32	34
58	58	58	58	58	58	58	56	55	53		51		49		47	46	46		44		41		39	

PHYSICALS SPECIFICATION ASTM E8/A370 AFTER HT TREAT

2.0 IN

TENSILE (KSI) YIELD (KSI) % ELONGATION REDUCTION OF AREA

	Tensile(KSI)	YIELD	ELONGATION	ROA	
BATCH 1 -	157.8	136.1	16	47	(100 bars)
BATCH 2 -	155.6	133.1	17	53	(119 bars)
BATCH 3 -	158.2	137.7	14	40	(40 bars)
BATCH 4 -	153.0	133.0	14.8	44	(10 bars)

REDUCTION RATIO

RATIO= 4.9 TO 1.0

Q.A. REVIEWED
DATE 7/20/09
DYSON

SURFACE INSPECT TO ASTM F788/F788M-02

** MATERIAL 100% MELTED AND MANUFACTURED IN THE U.S.A. BY THE ELECTRIC ARC FURNACE AND CONTINUOUS CASTING METHOD. THE PRODUCT HAS NOT BEEN REPAIRED BY WELDING AND THIS MATERIAL HAS NOT BEEN EXPOSED

We certify that these data are correct and in compliance with specified requirements.

Gerdau MacSteel Monroe
8000 East Front Street
Monroe, MI 48161

Quality Assurance Representative

CONTINUED ON PAGE 3

GERDAU MACSTEEL

5591 MORRILL ROAD
JACKSON, MICHIGAN 49201

CERTIFIED MATERIAL TEST REPORT

CODE NCJ11

CUSTOMER ORDER NUMBER	CUSTOMER PART NUMBER	HEAT NUMBER	WORK ORDER NUMBER	DATE
66015		M32854	228544 101	7/13/09

REPORT TO
QUALITY ASSURANCE
THE DYSON CORPORATION

53 FREEDOM RD.

PAINESVILLE , OH 44077

SHIP TO
JOS. DYSON & SONS INC.

53 FREEDOM RD.

PAINESVILLE , OH 44077

ORDERED

GRADE	SIZE	LENGTH
4140	3."	22' 7 3/4"

CUSTOMER SPECIFICATIONS

ASTM A354-07 GRADE BD; Q&T; (AIM FOR 35-37 ROCKWELL C)

TO MERCURY OR TO ANY OTHER METAL ALLOY THAT IS LIQUID AT AMBIENT TEMPERATURES DURING PROCESSING OR WHILE IN OUR POSSESSION. **

Q.A. REVIEWED
DATE 7/20/09
DYSON

We certify that these data are correct and in compliance with specified requirements.

Gerdau MacSteel Monroe
3000 East Front Street
Monroe, MI 48161

Quality Assurance Representative

A DIVISION OF J.T. ADAMS CO., INC.
4520 WILLOW PARKWAY
CLEVELAND, OHIO 44125
PHONE (216) 641-3290
FAX (216) 641-1223
www.tensile.com

TTML TENSILE TESTING / METALLURGICAL LABORATORY

CERTIFIED TEST REPORT

Dyson Corporation
53 Freedom Road
Painesville OH 44077

REF. S/O L102216

Job No.: B0-020-935
Date: 1-22-10
Cust. PO#: 70231

Description: 6 samples (1) 3" Dia. x 6" Lg. & (5) 3" Dia. x 1/2" Lg.
SO# 102215 Code# NCJ-10 Heat# M32854

Spec: ASTM A354-07a Grade BD
Caltran Special Provisions 10-1.59, 10-1.60 & 10-1.61; Plus Caltrans Standard Specifications 75-1.05 Applies

TEST RESULTS

	Tensile, ksi	Yield, .2% ksi	Elong., % in 4D	Red. of Area, %	Hardness, HRC
Req. (Min.):	140	115	14	40	31 – 39
	154	132	16	55	34
					34
					35
					34
					35

Test Method: ASTM A370-09a

The above **conforms** to specifications listed.

This material tested in accordance with the Tensile Testing's Quality System Manual dated 2/15/07 Rev. D as audited and approved by Dyson. The reported results represent the actual attributes of the material tested and indicate full compliance with all applicable specification and contract requirements. We certify that the foregoing is a true copy of the data resulting from tests performed in the laboratory.

Authorized Signature

Timothy J. Adams, President

ACCREDITED
Cert No. 0161

This Report May Not Be Reproduced Except In Full
This report represents Tensile Testing interpretation of the results obtained from the test and is not to be construed as a Guaranty or Warranty of the condition of the materials tested. Tensile Testing shall not be held liable for misinterpretation of conditions, loss, damage, injury or death arising from or attributable to delay preceding a test or subsequent to performance of a test.

STORK
Materials Technology

Stork Herron Testing Laboratories

1/12/2010

Steve Marsh
Dyson Corp.
53 Freedom Road
53 Freedom Rd
PAINESVILLE, OH 44077-1232

Date Received: 1/7/2010

Test Report No.: DYS006-10-01-94359-3

Material Testing and Non-Destructive Testing

5405 E. Schaaf Road
Cleveland, OH 44131
USA

Telephone : (216) 524-1450
Fax : (216) 524-1459
Website : www.storkherron.com

TEST REPORT

P.O. No.: 70023

Sample Description: One (1) Lot (4 Pcs) 3" - 4 UNC X 22' 2 13/16" Long Double End Threaded Rods, Per ASTM A490-08a, ASTM F788, Caltran Special Provisions 10-1.59, 10-1.60 and 10-1.61, 75-1.05 apply to this work, On-Site Testing 1-7-09, Job#: L 102216

MAGNETIC PARTICLE INSPECTION REPORT

Standard:	ASTM F788-06	
Procedure:	SOP 42.03	
METHOD		
☐ Dry	☒ Wet	
PARTICLES		
Magnaflux Particles: ☐ 8A Red ☐ 14A ☐ 3A Black ☒ 14AM ☐ 1 Gray ☐ Other Batch No. 07E06K	**Part Preparation:** ☒ None Required ☐ Solvent Clean ☐ Grinding ☐ Other	**Wet Particle Carrier:** ☐ Magnaflux Carrier II ☒ Pre Mixed ☐ Concentration MI Batch No.
CURRENT		
☐ AC	☐ FWDC	
☐ Central Conductor (AMPS)	☐ Head Shot (AMPS)	
☐ Coil (AMPS)	☐ Prods (AMPS/Spacing)	
Field Verified by: ☒ Pie Gage ☐ QQI ☐ Hall Effect Probe		
EQUIPMENT		
☐ Magnaflux H-720 S/N: 81471 Cal Due Date:		
☒ Yoke ☒ AC ☐ DC S/N: 9438 Spacing: 4" – 8" Cal Due Date: 2/11/10		

The above services were performed in accordance with Herron Testing Laboratories' Quality Assurance Program Edition 1, Revision 3 dated 6/30/09. Information and statements in this report are derived from material, information and/or specifications furnished by the client and exclude any expressed or implied warranties as to the fitness of the material tested or analyzed for any particular purpose or use. This report is the confidential property of our client and may not be used for advertising purposes. This report shall not be reproduced except in full, without written approval of this laboratory. The recording of false, fictitious or fraudulent statements or entries on this document may be punished as a felony under Federal Statutes.
Sample remnants are held for a minimum of 6 months following issuance of test results, at which point they will be discarded unless notified in writing by the client. This material was not contaminated by mercury or chlorinated solvents during the handling and processing at Stork-Herron Testing Laboratories facilities.

Paula Tesar

Paula Tesar
Quality Administrator

STORK
Materials Technology

Stork Herron Testing Laboratories

1/12/2010

Steve Marsh
Dyson Corp.
53 Freedom Road
53 Freedom Rd
PAINESVILLE, OH 44077-1232

Date Received: 1/7/2010

Test Report No.: DYS006-10-01-94359-3

Material Testing and Non-Destructive Testing

5405 E. Schaaf Road
Cleveland, OH 44131
USA

Telephone : (216) 524-1450
Fax : (216) 524-1459
Website : www.storkherron.com

TEST REPORT

P.O. No.: 70023

INSPECTION RESULTS	
Quantity	**Results**
4 PCS **NCJ11** **3"-4UNC-2AX22'-2.81"**	**ACCEPTABLE**
Comments: Marking Requirements: Demag and post cleaning requirements:	
Inspected by: Matthew Novak	Certification: ASNT-SNT-TC-1A Level ☐ II ☒ III

The reported results represent the actual attributes of the material tested and indicate full compliance with all applicable specification and contract requirements.

EXPORT CONTROLLED (ITAR)

THE TECHNICAL DATA AND / OR MATERIALS ASSOCIATED WITH THIS ORDER FALLS WITHIN THE DEFINITION OF THE INTERNATIONAL TRAFFIC IN ARMS REGULATIONS (ITAR) AND IS SUBJECT TO THE EXPORT CONTROL LAWS OF THE U.S. GOVERNMENT. TRANSFER OF THIS DATA BY ANY MEANS TO A FOREIGN PERSON OR FOREIGN ENTITY, WHETHER IN THE UNITED STATES OR ABROAD, WITHOUT AN EXPORT LICENSE, ITAR EXEMPTION OR OTHER APPROVAL FROM THE U.S. DEPARTMENT OF STATE, IS PROHIBITED.

The above services were performed in accordance with Herron Testing Laboratories' Quality Assurance Program Edition 1, Revision 3 dated 6/30/09. Information and statements in this report are derived from material, information and/or specifications furnished by the client and exclude any expressed or implied warranties as to the fitness of the material tested or analyzed for any particular purpose or use. This report is the confidential property of our client and may not be used for advertising purposes. This report shall not be reproduced except in full, without written approval of this laboratory. The recording of false, fictitious or fraudulent statements or entries on this document may be punished as a felony under Federal Statutes.
Sample remnants are held for a minimum of 6 months following issuance of test results, at which point they will be discarded unless notified in writing by the client. This material was not contaminated by mercury or chlorinated solvents during the handling and processing at Stork-Herron Testing Laboratories facilities.

Paula Tesar

Paula Tesar
Quality Administrator

Phoenix Manufacturing, Inc.
P.O. BOX 330
26666 Von Holten Rd.
Cole Camp, MO. 65325
660-668-2611
660-668-3160 (fax)

SSPC-SP10 Near White Metal Blast

Near-White Blast Cleaning - Removal of nearly all mill scale, rust, rust scale, paint, or foreign matter by the use of abrasives propelled through nozzles or by centrifugal wheels, to the degree hereafter specified A Near-White Blast Cleaned Surface Finish is defined as one from which all oil, grease, dirt, mill scale, rust, corrosion products, oxides, paint or other foreign matter have been completely removed from the surface except for very light shadows, very slight streaks or slight discolorations caused by rust stain, mill scale oxides, or light, tight residues of paint or coating that may remain. At least 95 percent of each square inch of surface area shall be free of all visible residues, and the remainder shall be limited to the light discoloration mentioned above

DYSON CORP PURCHASE ORDER 69398

3 EA NSH 2" 4 1/2 UNC 2A x 1105MM
REPLACEMENT PARTS

PURCHASE ORDER 70634

66 EA 3" -4UNC 2A x 21'- 10.84"

PURCHASE ORDER 70345

64 EA 3" -4unc 2A x 22' - 7.73"

64 EA 3" -4UNC 2A x 47.25"

PURCHASE ORDER 70549

32 EA 3" -4UNC 2A x 22' -2.81"

30 EA 3" -4UNC 2A x 21' -10.84"

1 EA 3" -4UNC 2A x 47.25"

Monnig Industries, Inc.

HOT DIP & MECHANICAL GALVANIZING
P.O. BOX 98
GLASGOW, MO 65254
PH. 660-338-2242 FAX: 660-338-5199

MARCH 5, 2010

DYSON CORPORATION
50 FREEDOM ROAD
PAINESVILLE, OH 44077

RE: GALVANIZING CERTIFICATE
P.O. 70549 CALTRAN RODS
32 PCS 3.00" -4UNC 2A X 22'- 2.81" LG DBL END
ROD W/ 11.81" OF USEABLE THREAD EA. END
33 PCS 3.00"-4UNC 2A X 21'- 10.84" LG DBL END
ROD W/ 11.81" OF USEABLE THREAD EA. END
1 PC 3.00" -4UNC 2A X 47.25" LG SINGLE END
ROD W/ 11.81" OF USEABLE THREAD ONE END

THIS WILL CERTIFY THAT THE MATERIAL GALVANIZED ON THE ABOVE JOB MEETS OR EXCEEDS THE MINIMUM REQUIREMENTS OF ASTM A-153 SPECIFICATIONS.

MILL READINGS

4.5	5.5	4.3	6.0
4.5	5.5	5.2	7.5
5.5	4.5	3.5	4.0

PATRICIA S. WESTHUES
NOTARY PUBLIC STATE OF MISSOURI
HOWARD COUNTY
MY COMMISSION EXP. APR. 18, 2012

John Monnig
JOHN MONNIG, PRESIDENT

Patricia S. Westhues
PATRICIA S. WESTHUES,
NOTARY PUBLIC

CERTIFIED MATERIAL TEST REPORT

DYSON CORP.
DN DOMESTIC NUT
53 Freedom Road
Painesville, OH 44077
440-946-3500
440-352-2700 fax

DYSON ORDER#	CUSTOMER ORDER#	ITEM NUMBER	QUANTITY SHIPPED	DATE SHIPPED
L 102217	660110-SA-017 CO13	3 of 12	66 pcs	2.12.10

CUSTOMER
American Bridge / Fluor JV
375 Burma Road
Oakland, CA 94607

USA

DRAWING
E2Bearing&ShearKey AnchorRod

PRODUCT DESCRIPTION
3.00"-4UNC-2A x 21'-10.84" OAL double end rod w/300mm useable thread each end. HDG per ASTM-A153 w/near white metal blast prior to galvanize. (Bid Item 61- E2 Shear Key Anchor Rod

SPECIFICATIONS
ASTM A354-07a Grade BD with special provisions 10-1.59, 10-1.60, 10-1.61 std specifications 75-1.05
Caltrans hold points apply to this order

STARTING MATERIAL	DIA	GRADE	QTY	LOT CODE	HEAT NO.	ORIGINAL MILL
Round Bar	3.000	BD	66	NCJ12	M32854	Gerdau Macsteel

The product listed above was manufactured, tested, sampled, and inspected in accordance with the specification, purchase order, and any supplementary requirements and was found to meet those requirements unless otherwise noted.

STATE OF CALIFORNIA • DEPARTMENT OF TRANSPORTATION
INSPECTION RELEASE TAG
TL-0624 (REV. 10/03)

STATE LOT NO. B288 004-10
CONTRACT NO. 04-0120F4
RELEASED (*) BY Bay 2 R 3 DATE 3/16/10
FM 92 1554 * Based upon selective sampling

STATE OF CALIFORNIA
STOCK MATERIAL
From: Dyson TO: Monnig
LOT NO. B208-020-10
INSPECTOR'S
NAME SB DATE 2-12-10

Attachments:
Mill Test Report ✓
Mechanical Test Reports ✓ (S)
N.D.E. Report ✓
Galvanizing Certification

Deborah A. Smith
Q.A. Admin. Assistant

GERDAU MACSTEEL

5591 MORRILL ROAD
JACKSON, MICHIGAN 49201

CERTIFIED MATERIAL TEST REPORT

CODE NCJ12

CUSTOMER ORDER NUMBER	CUSTOMER PART NUMBER	HEAT NUMBER	WORK ORDER NUMBER	DATE
66015		M32854	228544 101	7/13/09

REPORT TO
QUALITY ASSURANCE
THE DYSON CORPORATION

53 FREEDOM RD.

PAINESVILLE , OH 44077

SHIP TO
JOS. DYSON & SONS INC.

53 FREEDOM RD.

PAINESVILLE , OH 44077

ORDERED

GRADE	SIZE	LENGTH
4140	3."	22' 7 3/4"

CUSTOMER SPECIFICATIONS
ASTM A354-07 GRADE BD; Q&T; (AIM FOR 35-37 ROCKWELL C)

CHEMICAL ANALYSIS

C	Mn	P	S	Si	Ni	Cr	Mo	Cu	Sn	Al
0.43	0.88	0.014	0.033	0.26	0.15	0.93	0.17	0.20	0.009	0.020

V	Ca	Nb
0.010	0.0006	0.003

GRAIN SIZE SPECIFICATION ASTM E112 FINE GRAIN 5-8

HARDNESS SPECIFICATION ASTM E10 AFTER HT TREAT

SURFACE HARDNESS (HRC)
BATCH 1 - 36 (100 bars)
BATCH 2 - 32 (119 bars)
BATCH 3 - 35 (40 bars)
BATCH 4 - 37 (10 bars)

STATE OF CALIFORNIA

LOT NO: B208-020-10

NAME: SB 2-12-10

Q.A. REVIEWED
DATE 7/20/09
DYSON

We certify that these data are correct and in compliance with specified requirements.

Chris East
Quality Assurance Representative

Gerdau MacSteel Monroe
3000 East Front Street
Monroe, MI 48161

GERDAU MACSTEEL

5591 MORRILL ROAD
JACKSON, MICHIGAN 49201

CERTIFIED MATERIAL TEST REPORT

CODE NCJ12

CUSTOMER ORDER NUMBER	CUSTOMER PART NUMBER	HEAT NUMBER	WORK ORDER NUMBER	DATE
66015		M32854	228544 101	7/13/09

REPORT TO
QUALITY ASSURANCE
THE DYSON CORPORATION

53 FREEDOM RD.

PAINESVILLE , OH 44077

SHIP TO
JOS. DYSON & SONS INC.

53 FREEDOM RD.

PAINESVILLE , OH 44077

ORDERED

GRADE	SIZE	LENGTH
4140	3."	22' 7 3/4"

CUSTOMER SPECIFICATIONS

ASTM A354-07 GRADE BD; Q&T; (AIM FOR 35-37 ROCKWELL C)

HARDENABILITY SPECIFICATION ASTM A255/A304

THEORETICAL																							
J1	2	3	4	5	6	7	8	9	10	11	12	13	14	15	16	18	20	22	24	26	28	30	32	34
58	58	58	58	58	58	58	56	55	53		51		49		47	46	46		44		41		39	

PHYSICALS SPECIFICATION ASTM E8/A370 AFTER HT TREAT

2.0 IN

TENSILE (KSI) YIELD (KSI) % ELONGATION REDUCTION OF AREA

	Tensile(KSI)	YIELD	ELONGATION	ROA	
BATCH 1 -	157.8	136.1	16	47	(100 bars)
BATCH 2 -	155.6	133.1	17	53	(119 bars)
BATCH 3 -	158.2	137.7	14	40	(40 bars)
BATCH 4 -	153.0	133.0	14.8	44	(10 bars)

STATE OF CALIFORNIA

LOT NO: B208-020-10

NAME: SB 2-12-10

Q.A. REVIEWED
DATE 7/29/09
DYSON

REDUCTION RATIO

RATIO= 4.9 TO 1.0

SURFACE INSPECT TO ASTM F788/F788M-02
** MATERIAL 100% MELTED AND MANUFACTURED IN THE U.S.A. BY THE ELECTRIC ARC FURNACE AND CONTINUOUS CASTING METHOD. THE PRODUCT HAS NOT BEEN REPAIRED BY WELDING AND THIS MATERIAL HAS NOT BEEN EXPOSED

We certify that these data are correct and in compliance with specified requirements.

Quality Assurance Representative

Gerdau MacSteel Monroe
3000 East Front Street
Monroe, MI 48161

GERDAU MACSTEEL

5591 MORRILL ROAD
JACKSON, MICHIGAN 49201

CODE NCJ12

CERTIFIED MATERIAL TEST REPORT

CUSTOMER ORDER NUMBER	CUSTOMER PART NUMBER	HEAT NUMBER	WORK ORDER NUMBER	DATE
66015		M32854	228544 101	7/13/09

REPORT TO
QUALITY ASSURANCE
THE DYSON CORPORATION

53 FREEDOM RD.

PAINESVILLE , OH 44077

SHIP TO
JOS. DYSON & SONS INC.

53 FREEDOM RD.

PAINESVILLE , OH 44077

ORDERED

GRADE	SIZE	LENGTH
4140	3."	22' 7 3/4"

CUSTOMER SPECIFICATIONS

ASTM A354-07 GRADE BD; Q&T; (AIM FOR 35-37 ROCKWELL C)

TO MERCURY OR TO ANY OTHER METAL ALLOY THAT IS LIQUID AT AMBIENT TEMPERATURES DURING PROCESSING OR WHILE IN OUR POSSESSION. **

Q.A. REVIEWED
DATE 7/20/09
DYSON

STATE OF CALIFORNIA

LOT NO: B208-020-10

NAME: SB 2-12-10

We certify that these data are correct and in compliance with specified requirements.

Chris Eisler

Quality Assurance Representative

Gerdau MacSteel Monroe
3000 East Front Street
Monroe, MI 48161

A DIVISION OF J.T. ADAMS CO., INC.
4520 WILLOW PARKWAY
CLEVELAND, OHIO 44125
PHONE (216) 641-3290
FAX (216) 641-1223
www.tensile.com

TTML TENSILE TESTING METALLURGICAL LABORATORY

CERTIFIED TEST REPORT

Dyson Corporation
53 Freedom Road
Painesville OH 44077

Job No.: B0-026-232
Date: 1-29-10
Cust. PO#: 70335

Description: 6 samples (1) 3" Dia. x 6" Lg. & (5) 3" Dia. x 1/2" Lg.
SO# L102217 Code# NCJ-12 Heat# M32854

Spec: ASTM A354-07a Grade BD
Caltran Special Provisions 10-1.59, 10-1.60 & 10-1.61; Plus Caltrans Standard Specifications 75-1.05 Applies

TEST RESULTS

	Tensile, ksi	Yield, .2% ksi	Elong., % in 4D	Red. of Area, %	Hardness, HRC
Req. (Min.):	140	115	14	40	31 – 39
	159	141	16	55	33
					33
					33
					34
					34

Test Method: ASTM A370-09a

The above **conforms** to specifications listed.

This material tested in accordance with the Tensile Testing's Quality System Manual dated 2/15/07 Rev. D as audited and approved by Dyson. The reported results represent the actual attributes of the material tested and indicate full compliance with all applicable specification and contract requirements. We certify that the foregoing is a true copy of the data resulting from tests performed in the laboratory.

STATE OF CALIFORNIA

LOT NO: B208-020-10
NAME: SB 2-12-10

Authorized Signature

Timothy J. Adams, President

ACCREDITED Cert No. 0161

This Report May Not Be Reproduced Except In Full
This report represents Tensile Testing interpretation of the results obtained from the test and is not to be construed as a Guaranty or Warranty of the condition of the materials tested. Tensile Testing shall not be held liable for misinterpretation of conditions, loss, damage, injury or death arising from or attributable to delay preceding a test or subsequent to performance of a test.

STORK
Materials Technology

Stork Herron Testing Laboratories

1/12/2010

Material Testing and Non-Destructive Testing

Steve Marsh
Dyson Corp.
53 Freedom Road
53 Freedom Rd
PAINESVILLE, OH 44077-1232

5405 E. Schaaf Road
Cleveland, OH 44131
USA

Telephone : (216) 524-1450
Fax : (216) 524-1459
Website : www.storkherron.com

Date Received: 1/7/2010

Test Report No.: DYS006-10-01-94359-2

TEST REPORT

P.O. No.: 70023

Sample Description: One (1) Lot (6 Pcs) 3" - 4 UNC X 21' 10 7/8" Long Double End Threaded Rods, Per ASTM A490-08a, ASTM F788, Caltran Special Provisions 10-1.59, 10-1.60 and 10-1.61, 75-1.05 apply to this work, On-Site Testing 1-7-10, Job#: L 102217

MAGNETIC PARTICLE INSPECTION REPORT

Standard:	ASTM F788-06	
Procedure:	SOP 42.03	
METHOD		
☐ Dry	☒ Wet	
PARTICLES		
Magnaflux Particles: ☐ 8A Red ☐ 14A ☐ 3A Black ☒ 14AM ☐ 1 Gray ☐ Other Batch No. 07E06K	**Part Preparation:** ☒ None Required ☐ Solvent Clean ☐ Grinding ☐ Other	**Wet Particle Carrier:** ☐ Magnaflux Carrier II ☒ Pre Mixed ☐ Concentration MI Batch No.
CURRENT		
☐ AC	☐ FWDC	
☐ Central Conductor (AMPS)	☐ Head Shot (AMPS)	
☐ Coil (AMPS)	☐ Prods (AMPS/Spacing)	
Field Verified by: ☒ Pie Gage ☐ QQI ☐ Hall Effect Probe		
EQUIPMENT		
☐ Magnaflux H-720 S/N: 81471 Cal Due Date:		
☒ Yoke ☒ AC ☐ DC S/N: 9438 Spacing: 4" – 8" Cal Due Date: 2/11/10		

STATE OF CALIFORNIA

LOT NO: B208-020-10

NAME: SB 2-12-10

The above services were performed in accordance with Herron Testing Laboratories' Quality Assurance Program Edition 1, Revision 3 dated 6/30/09. Information and statements in this report are derived from material, information and/or specifications furnished by the client and exclude any expressed or implied warranties as to the fitness of the material tested or analyzed for any particular purpose or use. This report is the confidential property of our client and may not be used for advertising purposes. This report shall not be reproduced except in full, without written approval of this laboratory. The recording of false, fictitious or fraudulent statements or entries on this document may be punished as a felony under Federal Statutes.
Sample remnants are held for a minimum of 6 months following issuance of test results, at which point they will be discarded unless notified in writing by the client. This material was not contaminated by mercury or chlorinated solvents during the handling and processing at Stork-Herron Testing Laboratories facilities.

Paula Tesar

Paula Tesar
Quality Administrator

STORK
Materials Technology

Stork Herron Testing Laboratories

1/12/2010

Steve Marsh
Dyson Corp.
53 Freedom Road
53 Freedom Rd
PAINESVILLE, OH 44077-1232

Date Received: 1/7/2010

Test Report No.: DYS006-10-01-94359-2

Material Testing and Non-Destructive Testing

5405 E. Schaaf Road
Cleveland, OH 44131
USA

Telephone : (216) 524-1450
Fax : (216) 524-1459
Website : www.storkherron.com

TEST REPORT

P.O. No.: 70023

INSPECTION RESULTS	
Quantity	**Results**
6 PCS NCJ12 3"-4UNC-2AX21'- 10.84"	**ACCEPTABLE**
Comments: Marking Requirements: Demag and post cleaning requirements:	
Inspected by: Matthew Novak	Certification: ASNT-SNT-TC-1A Level ☐ II ☒ III

The reported results represent the actual attributes of the material tested and indicate full compliance with all applicable specification and contract requirements.

EXPORT CONTROLLED (ITAR)

THE TECHNICAL DATA AND / OR MATERIALS ASSOCIATED WITH THIS ORDER FALLS WITHIN THE DEFINITION OF THE INTERNATIONAL TRAFFIC IN ARMS REGULATIONS (ITAR) AND IS SUBJECT TO THE EXPORT CONTROL LAWS OF THE U.S. GOVERNMENT. TRANSFER OF THIS DATA BY ANY MEANS TO A FOREIGN PERSON OR FOREIGN ENTITY, WHETHER IN THE UNITED STATES OR ABROAD, WITHOUT AN EXPORT LICENSE, ITAR EXEMPTION OR OTHER APPROVAL FROM THE U.S. DEPARTMENT OF STATE, IS PROHIBITED.

STATE OF CALIFORNIA

LOT NO: B208-020-10

NAME: SB 2-12-10

Paula Tesar

Paula Tesar
Quality Administrator

The above services were performed in accordance with Herron Testing Laboratories' Quality Assurance Program Edition 1, Revision 3 dated 6/30/09. Information and statements in this report are derived from material, information and/or specifications furnished by the client and exclude any expressed or implied warranties as to the fitness of the material tested or analyzed for any particular purpose or use. This report is the confidential property of our client and may not be used for advertising purposes. This report shall not be reproduced except in full, without written approval of this laboratory. The recording of false, fictitious or fraudulent statements or entries on this document may be punished as a felony under Federal Statutes.
Sample remnants are held for a minimum of 6 months following issuance of test results, at which point they will be discarded unless notified in writing by the client. This material was not contaminated by mercury or chlorinated solvents during the handling and processing at Stork-Herron Testing Laboratories facilities.

Phoenix Manufacturing, Inc.
P.O. BOX 330
26666 Von Holten Rd.
Cole Camp, MO. 65325
660-668-2611
660-668-3160 (fax)

SSPC-SP10 Near White Metal Blast

Near-White Blast Cleaning - Removal of nearly all mill scale, rust, rust scale, paint, or foreign matter by the use of abrasives propelled through nozzles or by centrifugal wheels, to the degree hereafter specified. A Near-White Blast Cleaned Surface Finish is defined as one from which all oil, grease, dirt, mill scale, rust, corrosion products, oxides, paint or other foreign matter have been completely removed from the surface except for very light shadows, very slight streaks or slight discolorations caused by rust stain, mill scale oxides, or light, tight residues of paint or coating that may remain. At least 95 percent of each square inch of surface area shall be free of all visible residues, and the remainder shall be limited to the light discoloration mentioned above.

DYSON CORP PURCHASE ORDER 69398
3 EA NSH 2" 4 1/2 UNC 2A x 1105MM
REPLACEMENT PARTS

PURCHASE ORDER 70634
66 EA 3" -4UNC 2A x 21'- 10.84"

PURCHASE ORDER 70345
64 EA 3" -4unc 2A x 22' - 7.73"
64 EA 3" -4UNC 2A x 47.25"

PURCHASE ORDER 70549
32 EA 3" -4UNC 2A x 22' -2.81"
30 EA 3" -4UNC 2A x 21' -10.84"
1 EA 3" -4UNC 2A x 47.25"

Monnig Industries, Inc.

HOT DIP & MECHANICAL GALVANIZING
P.O. BOX 98
GLASGOW, MO 65254
PH. 660-338-2242 FAX: 660-338-5199

MARCH 5, 2010

DYSON CORPORATION
50 FREEDOM ROAD
PAINESVILLE, OH 44077

RE: GALVANIZING CERTIFICATE
P.O. 70634 CALTRAN RODS
66 PCS 3.00"-4UNC 2A X 21'- 10.84" LG DBL END
ROD W/ 11.81" OF USEABLE THREAD EA. END

THIS WILL CERTIFY THAT THE MATERIAL GALVANIZED ON THE ABOVE JOB MEETS OR EXCEEDS THE MINIMUM REQUIREMENTS OF ASTM A-153 SPECIFICATIONS.

MILL READINGS

5.0	4.6	5.0	4.6
6.1	5.0	4.0	5.5
7.5	6.2	7.2	10
8.2	5.5	3.6	4.5
5.5	3.5	3.2	4.0

PATRICIA S. WESTHUES
NOTARY PUBLIC STATE OF MISSOURI
HOWARD COUNTY
MY COMMISSION EXP. APR. 18, 2012

John Monnig
JOHN MONNIG, PRESIDENT

Patricia S Westhues
PATRICIA S. WESTHUES,
NOTARY PUBLIC

State of California
Department of Transportation

Structural Materials Testing Laboratory
5900 Folsom Boulevard, Sacramento, CA 95819

TEST REPORT

ACCREDITED
CERTIFICATE NO. 2364.01

Remarks ref: ASTM A354BD, A153, TM 03. Heat #M32854; Lot #NCJ12 & NCJ10

Sample No: SM-10-0223
Date Sampled: 03/05/10 **Date Rec'd:** 03/09/10 **Date Reported:** 03/15/10
Lot No: B23101510 / B23101610 **TL-101 / SIC No:** C715362 / C715363
Contract/Permit No: 04-0120F4
Material: 3"x 21'-10.84" & 3"x 22'-7.73" A354 Grade BD HDG Anchor Bolt
Manufacturer: Dyson
Sampler: J. Lizardo

3-17-10

Results: SAMPLES SUBMITTED ARE SATISFACTORY FOR USE

SOURCE	DISTRICT	E.A.	SUB JOB	SPECIAL DESIGNATION	OBJECT
59318	04	0120F3			1270

10-0223 3/9

STATE OF CALIFORNIA • DEPARTMENT OF TRANSPORTATION
SAMPLE IDENTIFICATION CARD CARD NUMBER C 715363
TL-0101 (REV. 10/97)

10-0223 3/9

STATE OF CALIFORNIA • DEPARTMENT OF TRANSPORTATION
SAMPLE IDENTIFICATION CARD CARD NUMBER C 715362
TL-0101 (REV. 10/97)

☐ PRELIMINARY TESTS
☐ PROCESS TESTS
☐ ACCEPTANCE TESTS
INDEPENDENT ASSURANCE TESTS
☐ DIST. LAB
☑ TRANS. LAB
☐ SPECIAL TESTS

SAMPLE SENT TO:
☐ HDQTRS. LAB
☐ BRANCH LAB
☐ DIST. LAB

FIELD NO. —
DIST. LAB NO.
LOT NO. B231-0R5-10
SHIPMENT NO. P.O. OR REQ. NO.
AUTHORIZATION NO.

SAMPLE OF 3"Ø DOUBLE ENDED ROD
FOR USE IN SPIDER GAS ED BEARING/SHEAR KEY
SAMPLE FROM 1-3"Ø-4UNC 2A X 21'10.84" L DOUBLE ENDED ROD ASTM A354 GR BD
DEPTH
LOCATION OF SOURCE MORNING INDUSTRIES
4120 INDUSTRIAL DRIVE, LEXINGTON, MO
THIS SAMPLE IS SHIPPED IN (NO. CONTAINERS) — AND IS ONE OF A GROUP OF — SAMPLES REPRESENTING (TONS, GALS, BBLS, STA. ETC.) 96 PCS.
OWNER OR MANUFACTURER MORNING (NCJ-12)
TOTAL QUANTITY AVAILABLE 3 TEST RESULTS DESIRED ☐ NORMAL ☐ PRIORITY DATE NEEDED
REMARKS 1-3"Ø X 47 1/4" LONG THREADED
2-3"Ø X 12" LONG BLANK
COVER ADDITIONAL INFORMATION WITH LETTER
DATE SAMPLED 3/5/10
BY J. LIZARDO TITLE RA INSPECTOR
DIST., CO., RTE., PM
LIMITS 04-DYDOTV SPECIALS / ASTM A354
CONT. NO. 04-DYDOTV
FED. NO.
RES. ENGR. OR SUPT. GARY PURSELL
ADDRESS 333 BURMA RD, OAKLAND, CA
CONTRACTOR AMERICAN BRIDGE/FLUOR JV
375 BURMA RD OAKLAND, CA

ENCLOSE WITH SAMPLE

Print

10-0223 41

Field Inspectors Fastener Assembly Sampling Sheet

Caltrans Test Number:	0								
Date Sampled:	3/5/2010	Contractor:	Monnig Industries, Inc			Bid Item No.:	61		
Contract:	04-0120F4	Location Sampled:	400 Industrial Drive, Glasgow, MO			Contact:	Ryan Monnig		
CT Lot No.	3231-015-1	Sampled By:	J Lizardo			Title:	Quality Assurance		
	Inspectors Office:	Emeryville	Phone #:	(510) 301-1112		Fax #:	(510) 601-1776		
R. E.'s Name:	Gary Pursell		Co.:	SF	Rt.:	80	PM.:	13.2/13.9	
R. E.'s Address:	333 Burma Road		Date Released:			Ship To:	Trans Lab		
City St. Zip:	Oakland, Ca 94607		Identification:			File Loc.:	1 .09		

Sample No.	1	2	3	4	5	6	7	8	9	10
Assembly or Rocap No.	N/A									
Quantity Available	96									
Number of Samples	3*									
Bolt Manufacture	DYSON									
Heat Number	M32854									
Mfg. Lot Number	NCJ12									
Grade/Discription	A354 Gr. BD									
Size	3" X 21'- 10.84"									
Finish	Hot Dip Galv.									
Verify Test Reports	yes									
Pass/Fail										
Nut Manufacture	N/A									
Heat Number										
Mfg. Lot Number										
Grade										
Finish										
Verify Test Reports										
Pass/Fail										
Washer Manufacture	N/A									
Heat Number										
Mfg. Lot Number										
Grade										
Finish										
Verify Test Reports										
Pass/Fail										

Notes: *Sample: 1- 3" dia. X 47 1/4" long threaded one end, galv. and 2-3" dia. X 12" long blank material.

Note to TL-29:

10-0000

Field Inspectors Fastener Assembly Sampling Sheet

Caltrans Test Number:	0								
Date Sampled:	3/5/2010	Contractor:	Monnig Industries, Inc			Bid Item No.:	45		
Contract:	04-0120F4	Location Sampled:	400 Industrial Drive, Glasgow, MO			Contact:	Ryan Monnig		
CT Lot No.	3231-016-1	Sampled By:	J Lizardo			Title:	Quality Assurance		
	Inspectors Office:	Emeryville		Phone #:	(510) 301-1112		Fax #:	(510) 601-1776	
R. E.'s Name:	Gary Pursell			Co.:	SF	Rt.:	80	PM.:	13.2/13.9
R. E.'s Address:	333 Burma Road			Date Released:			Ship To:	Trans Lab	
City St. Zip:	Oakland, Ca 94607			Identification:			File Loc.:	1 .09	

Sample No.	1	2	3	4	5	6	7	8	9	10
Assembly or Rocap No.	N/A									
Quantity Available	64									
Number of Samples	3*									
Bolt Manufacture	DYSON									
Heat Number	M32854									
Mfg. Lot Number	NCJ10									
Grade/Discription	A354 Gr. BD									
Size	3" X 22'- 7.73"									
Finish	Hot Dip Galv.									
Verify Test Reports	yes									
Pass/Fail										
Nut Manufacture	N/A									
Heat Number										
Mfg. Lot Number										
Grade										
Finish										
Verify Test Reports										
Pass/Fail										
Washer Manufacture	N/A									
Heat Number										
Mfg. Lot Number										
Grade										
Finish										
Verify Test Reports										
Pass/Fail										

Notes: *Sample: 1- 3" dia. X 47 1/4" long threaded one end, galv. and 2-3" dia. X 12" long blank material.

set of sample will also cover 32 pcs. of the rods that have the ht code NCJ 11 since they are on the same b

Note to TL-29:

STRUCTURAL MATERIALS TESTING LABORATORY
FORM TM- REV. 2/05)

FASTENER ASSEMBLY WORKSHEET

APPROVED FOR USE BY SMTL
QUALITY MANAGER: [illegible]

SM Number 10-0723 Lot Number B23101510/B23101610 Page 1 of 1

Contract 04-0120F4 TL-0101 Number C715362/C715363 Date Rec'd. 3/9/10 Date Tested: 3/10/10

Bolts: A354 GRADE BD HDG Lab Technician: FRED S.

Sample No.	1A		2A							
Mfg. Lot No.	NCJ12		NCJ10							
Product Markings										
Size	3"		3"							
Pitch Diameter	2.839	✓	2.833	✓						
Bolt Length	4'		4'							
Ring Gages/Go Nogo	—		—							
Zinc Coating Thick.	3.06	✓	3.47	✓						
Hardness Rc / Rb	—		—							
.505 ~~Wedge~~ Tensile	505	✓	505	✓						

Nuts:

Sample No.										
Mfg. Lot No.										
Product Markings										
Size										
Go / No-Go										
Zinc Coating										
Hardness Rc / Rb										
Nut Proof Load										

Washer:

Sample No.										
Mfg. Lot No.										
Product Markings										
Zinc Coating										
Hardness Rc / Rb										

.505 SAMPLES

Department of Transportation
Structural Materials Testing Laboratory
UTM: BALDWIN 60 Kip

SM Number = 10-0223

Sample	Heat Number	Diameter (in)	Area (in^2)	Stress at Offset (psi)	Tensile Strength (psi)	Elongation in 4 x d (%) 14% min	Tested By
12A	NCJ12	0.497	0.194	146459	164690	17.1 Avg	FSaylor
12B	NCJ12	0.501	0.1971	146343 OK	164890 OK	13.5 OK	FSaylor
10A	NCJ10	0.499	0.1956	146139	164330	16.8 Avg	FSaylor
10B	NCJ10	0.501	0.1971	142837 OK	164080 OK	13.2 OK	FSaylor

STATE OF CALIFORNIA • DEPARTMENT OF TRANSPORTATION

TRANSPORTATION LABORATORY
REPORT OF TESTS

TL - 619 (REV. 5/95)

S. M. NO. 10-0223	DATE RECEIVED 3/9/10
T 101 NO. C 715362 / C 715363	CONT. . W.O.. OR P.O. NO. 04-0120F4
LOT NO. B23101510 / B23101610	F.A.P. NO.

TEST NAME	DISTRICT	COUNTY	ROUTE	POST MILES
CONTRACTOR	SAMPLED BY		DATE SAMPLED	SUPPLY SOURCE
AGENCY	MANUFACTURER		MATERIAL TESTED FOR	

SAMPLE NO.	SAMPLE TYPE	HEAT NO.	SIZE	AREA BEFORE	AREA AFTER	YIELD ~~MPa~~ ACTUAL	YIELD PSI	ULTIMATE PSI ACTUAL	ULTIMATE ~~MPa~~	ELONG. ~~IN~~ %	RED. AREA %	COLD BEND	CHEMICAL ANALYSIS C	MN	P	S	SI	A OR E
12A		NCJ12	.497	2.0285	2.3755		146459		164690	17.1								
12B		NCJ12	.501	2.0285	2.3030		146343		164890	13.5								
10A		NCJ10	.499	2.0285	2.3685		146139		164330	16.8								
10B		NCJ10	.501	2.0285	2.2965		142.837		164080	13.2								

SPECIFICATIONS

A

REMARKS

A354 BD

DATE TESTED 3/10/10	TESTED BY [signature]	APPROVED BY

FM 3018 M 95

STRUCTUR MATERIALS TESTING LABORATORY
FORM TL-652 (REV. 3/05)

TEST SI CIMEN PREPARATION AND RECORD

APPROVED FOR E BY SMTL
QUALITY MANAGER: B Berger

SM No.	Contract No.	Requesting Lab Technician	Date Needed
10-0223	04-0120F4	F Saylor	normal
TL-0101 No.	**E.A./Spec. Desg./Object**	**Date Received**	**Date Tested/Provided**
C715362	04-0120F3	3/9/10	3/10/10

[x] Machine Shop

Work Requested

[x] standard round tension test specimen, circle one: 0.500" 0.350" 0.250"

[ ] standard rectangular tension test specimen, circle one: 18" long, 8" gage length
8" long, 2" gage length

[ ] Charpy, circle one: 10mm x 10mm
10mm x 7.5mm

[ ] hardness measurement sample (fasteners)

[ ] weld nugget

[ ] chemistry slug

[ ] other: ____hardness

[x] see instructions →

Please Machine .505

Lot #NCJ12, mark 12 A &B

Lot #NCJ10 , Mark 10 A & B

[ ] Chemistry Lab

type of material: __

Work Requested

[ ] neoprene verification

[ ] oil swell

[ ] zinc coating weight

[ ] steel chemistry analysis

[ ] other: _____

← [ ] see instructions

[ ] Other (explain)

Comments or further instructions

The received service is acceptable

Receiving Lab Technician

3/10/10
Date

TRANSLAB

G.M. INSPECTION REPORT FOR HEAT # 12

COMPLETED BY ms
DATE: 3-11-10

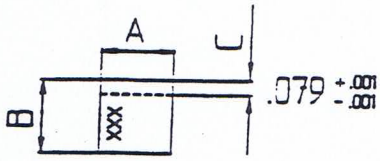

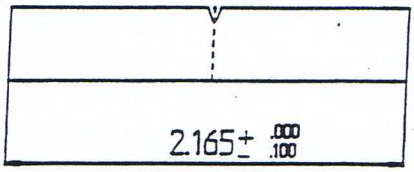

CHARPY IMPACT SPECIMENS

☐ FULL SIZE 10MM X 10MM

☐ REDUCED

MATERIAL SURFACE

NOTCH ORIENTATION

	OK
1	
2	
3	

	A	B	C	2.165	.010 R ±.001 -.001
1					
2					
3					

NOTE: IMPACT SPECIMENS ARE TO BE GROUND TO .394 ±.003 -.003 ON SURFACE GRINDER
ASTM E23 CALLS FOR 45 deg. V NOTCH WITH A .010 + or − .001 RADIUS

A DIA.

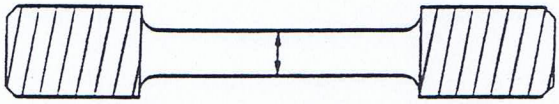

☒ .500 ±.010 -.010

☐ .350 ±.007 -.007

☐ OTHER

A DIA. IS

A	.500
B	.505

NOTES / SPECIAL INSTRUCTIONS

TRANSLAB
G.M. INSPECTION REPORT FOR HEAT # 10

COMPLETED BY ms
DATE: 3-11-10

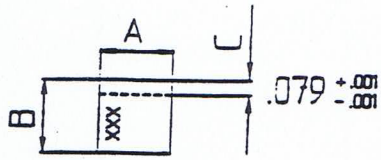

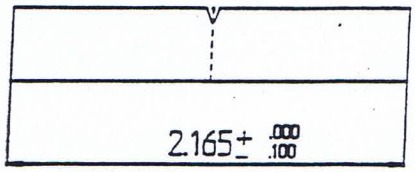

CHARPY IMPACT SPECIMENS

☐ FULL SIZE 10MM X 10MM

☐ REDUCED

MATERIAL SURFACE

NOTCH ORIENTATION

	OK
1	
2	
3	

	A	B	C	2.165	.010 R ±
1					
2					
3					

NOTE: IMPACT SPECIMENS ARE TO BE GROUND TO .394 ± ON SURFACE GRINDER
ASTM E23 CALLS FOR 45 deg. V NOTCH WITH A .010 + or − .001 RADIUS

A DIA.

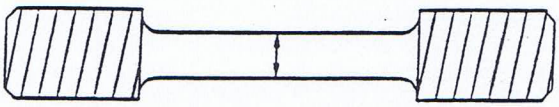

☒ .500 ±

☐ .350 ±

☐ OTHER

A DIA. IS

A	.501
B	.504

NOTES / SPECIAL INSTRUCTIONS