Dist	COUNTY	ROUTE	KILOMETER POST / TOTAL PROJECT	SHEET No.	TOTAL SHEETS
11	SD	52	26.1/2[illegible]		

REGISTERED CIVIL ENGINEER DATE

PLANS APPROVAL DATE

REGISTERED PROFESSIONAL ENGINEER NO. EXP. CIVIL STATE OF CALIFORNIA

THE STATE OF CALIFORNIA OR ITS OFFICERS OR AGENTS SHALL NOT BE RESPONSIBLE FOR THE ACCURACY OR COMPLETENESS OF ELECTRONIC COPIES OF THIS PLAN SHEET.

CH2M HILL, Inc.
402 W. Broadway, Suite 1450
San Diego, CA 92101

DRAFT

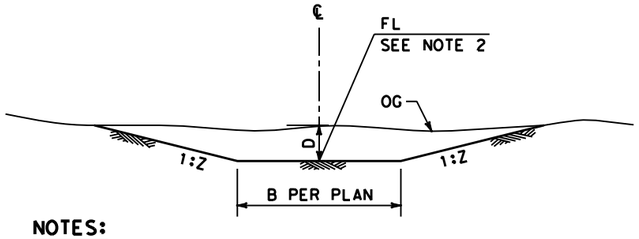

NOTES:

1. 'B' AND 'Z' AS SHOWN ON PLANS. IF 'B' NOT SHOWN, THEN 'B' = 0.
2. LONGITUDINAL SLOPE AND CROSS SLOPE TO BE CONTROLLED BY GRADING UNLESS SPECIFIED ON PLANS.

SWALE

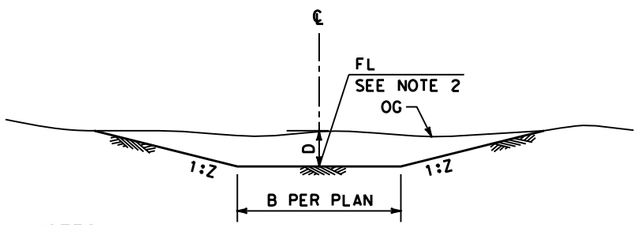

NOTES:

1. 'B' AND 'Z' AS SHOWN ON PLANS. IF 'B' NOT SHOWN, THEN 'B' = 0.
2. LONGITUDINAL SLOPE AND CROSS SLOPE TO BE CONTROLLED BY GRADING UNLESS SPECIFIED ON PLANS.
3. SEE EROSION CONTROL PLANS FOR LIMITS OF BIOFILTRATION SWALE SEEDING.

BIOFILTRATION SWALE

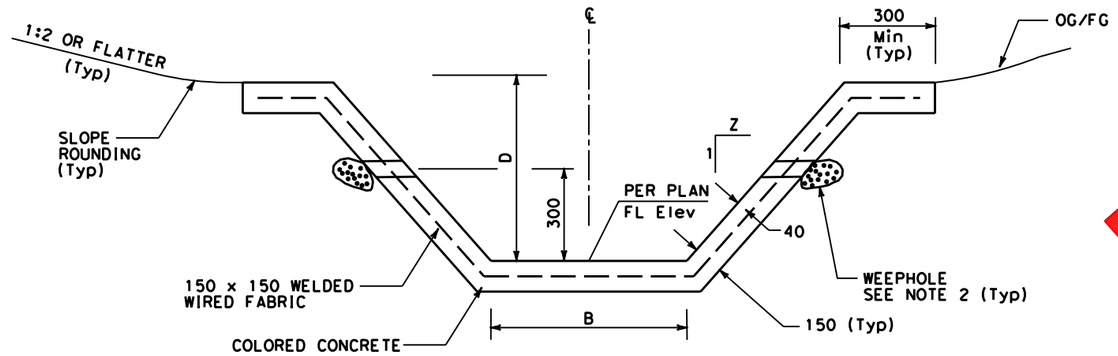

CONCRETE CHANNEL

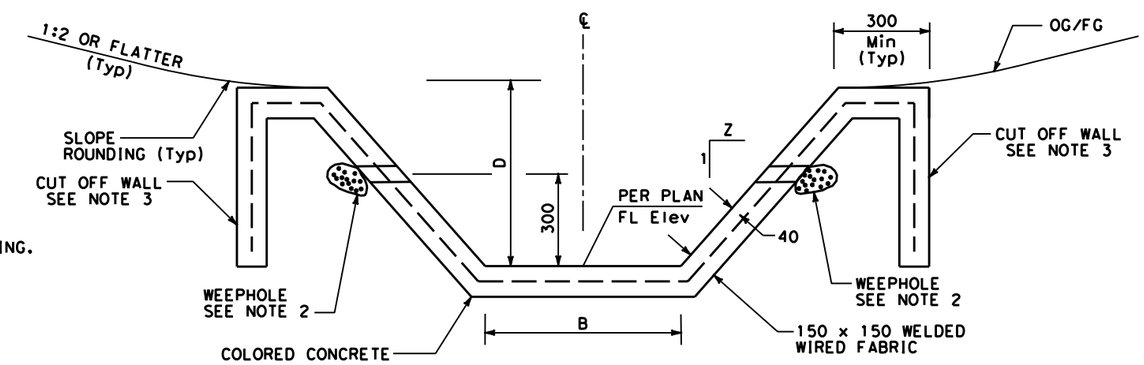

CONCRETE CHANNEL WITH CUT OFF WALL

CONCRETE CHANNEL NOTES:

1. 'B', 'Z', & 'D' AS SHOWN ON PLANS.
2. WEEPHOLES SHALL BE 100 mm Dia @ 3.0 m C-C. SEE NOTES B AND C ON Std PLAN B0-3. PERVIOUS BACKFILL MATERIAL SHALL CONFORM TO THE GRADING FOR 37.5 mm x 19 mm PRIMARY AGGREGATE SIZE, AS SPECIFIED IN THE PROJECT SPECIAL PROVISIONS. WEEPHOLES ARE NEEDED FOR D>600 mm.
3. CUTOFF WALL SHALL BE PROVIDED WHEN SPECIFIED ON PLANS. DEPTH = D + 150 mm, Max DEPTH = 600 mm.
4. Min DISTANCE SHALL BE 40 mm BETWEEN WELDED WIRE FABRIC AND FACE OF Conc.
5. WHEN CONNECTING CONCRETE CHANNEL WITH TYPE F INLET, SEE DRAINAGE DETAIL "CHANNEL TRANSITION AT TYPE F INLET"

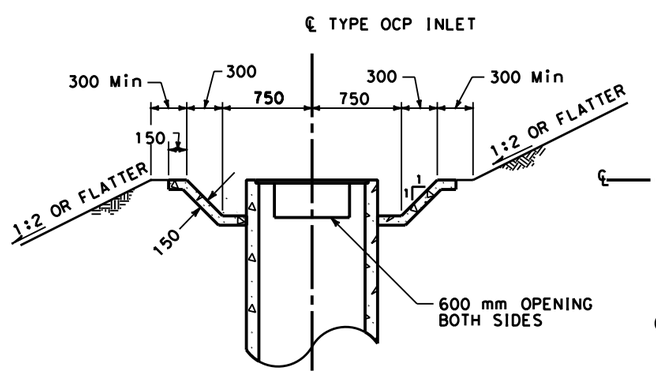

SECTION A-A

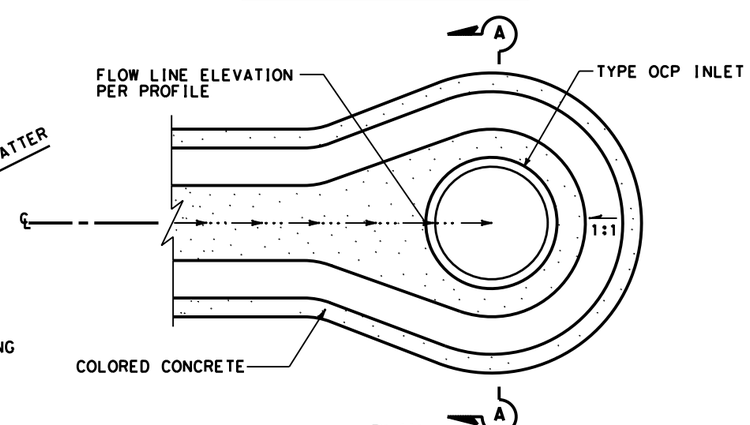

PLAN

CONCRETE CHANNEL ENDING

ALL DIMENSIONS ARE IN MILLIMETERS UNLESS OTHERWISE SHOWN

DRAINAGE DETAILS

NO SCALE

DD-13

REVISED BY	DATE REVISED
CALCULATED-DESIGNED BY	CHECKED BY

CONSULTANT FUNCTIONAL SUPERVISOR

STATE OF CALIFORNIA - DEPARTMENT OF TRANSPORTATION

Caltrans

LAST REVISION 05-29-08 | DATE PLOTTED => $DATE | TIME PLOTTED => $TIME

BORDER LAST REVISED 7/1/2007

RELATIVE BORDER SCALE IS IN MILLIMETERS 0 20 40 60 80

USERNAME => $USER
DGN FILE => $REQUEST

CU 11276 | EA 2T0101

BSW detail1 rbs.dgn 7/1/2009 3:07:19 PM