APPENDIX D

CALTRANS FISH PASSAGE DESIGN FORMS

Form 1 – Existing Data and Information Summary
Form 2 – Site Visit Summary
Form 3 – Guidance of Selection Fish Passage Design Option
Form 4 – Guidance on Methodology for Hydrologic Analysis
Form 6A – NMFS Active Channel Design Option
Form 6A1 – CA Fish & Game Low-Slope Design Option
Form 6B – Hydraulic Design Option
Form 6C – Stream Simulation Design Option (Updated October 2014)
Form 6D – Hydraulic Baffle Design Option
Form 6E – Hydraulic Rock Weir Design Option

FORM 1

EXISTING DATA AND INFORMATION SUMMARY

EXISTING DATA AND INFORMATION SUMMARY — FORM 1

Project Information		Computed:	Date:
		Checked:	Date:
Stream Name:	County:	Route:	Postmile:

Proposed Project Type	☐ New Culvert	☐ New Bridge
	☐ Replacement Culvert	☐ Replacement Bridge
	☐ Retrofit Culvert	☐ Retrofit Bridge
	☐ Proposed Culvert Length= ft	☐ Proposed Bridge Length= ft
	☐ Other	☐ Other

Design Species/Life Stage	☐ All Species	Source: Contact: Date:
	☐ Adult Anadromous Salmonids	
	☐ Adult Non-Anadromous Salmonids	
	☐ Juvenile Salmonids	
	☐ Native Non-Salmonids	
	☐ Non-Native Species	

Collect Existing Data

Included in Caltrans Culvert Inventory	☐ Yes	☐ No
As-Built Drawings	☐ Yes	☐ No
Assessor's Parcel Map	☐ Yes	☐ No
Previous Studies Performed: (i.e. FEMA Flood Insurance Studies, Army Corps of Engineering Studies, Other)		
Hydrology Analysis	☐ Yes	☐ No
Hydraulics Analysis	☐ Yes	☐ No
Floodplain Mapping	☐ Yes	☐ No
Other Studies Types Available: (i.e. Watershed Management Plans, Stream Restoration Plans, Other)	☐ Yes	☐ No
Existing Land Use Map	☐ Yes	☐ No
Proposed Land Use Map	☐ Yes	☐ No
Precipitation Gage Data	☐ Yes	☐ No
Stream Flow Gage Data	☐ Yes	☐ No

EXISTING DATA AND INFORMATION SUMMARY			FORM 1
Topographic Mapping: (i.e. USGS Topographic Quadrangle, DEM Data, LIDAR Data, Other)	☐ Yes	☐ No	
District Hydraulics Library	☐ Yes	☐ No	
Obtain Access Permission			
Will Project study limits extend beyond Caltrans R/W? ☐ Yes ☐ No			
If yes, obtain right-of-entry.			
Contact Report Index Attached ☐ Yes ☐ No			
Existing Information Index Attached ☐ Yes ☐ No			

CONTACT REPORT INDEX

Project Information		Computed:	Date:
		Checked:	Date:
Stream Name:	County:	Route:	Postmile:

Date of Contact	Person Contacted	Subject Discussed

EXISTING INFORMATION INDEX

Project Information		Computed:	Date:
		Checked:	Date:
Stream Name:	County:	Route:	Postmile:

Report Date	Report Name and Source

FORM 2

SITE VISIT SUMMARY

SITE VISIT SUMMARY — FORM 2

Project Information		Computed:	Date:
		Checked:	Date:
Stream Name:	County:	Route:	Postmile:

Obtain Physical Characteristics of Existing Culvert

Confined Spaces

Is the culvert height 5 ft or greater?	☐ Yes ☐ No
Can you stand up in the culvert?	☐ Yes ☐ No
Can you see all the way through the culvert?	☐ Yes ☐ No
Can you feel a breeze through the culvert?	☐ Yes ☐ No

If answer is "No" to any of the above questions, do not enter the culvert without confined spaces equipment for surveying.

Inlet Characteristics

Inlet Type	☐ Projecting	☐ Headwall	☐ Wingwall	
	☐ Flared end section	☐ Segment connection		
Inlet Condition	☐ Channel scour	☐ Excessive deposition	☐ Debris accumulation	☐ None applicable
Inlet Apron	☐ Channel scour	☐ Excessive deposition	☐ Debris accumulation	☐ None applicable

Skew Angle: °	Upstream Invert Elevation: ft (NGVD 29 or NAVD 88)

Barrel Characteristics

Diameter:	in	Fill height above culvert:	ft
Height/Rise:	ft	Length:	ft
Width/Span:	ft	Number of barrels:	

Culvert Type	☐ Arch	☐ Box	☐ Circular
	☐ Pipe-Arch	☐ Elliptical	
Culvert Material	☐ HDPE	☐ Steel Plate Pipe	☐ Concrete Pipe
	☐ Spiral Rib / Corrugated Metal Pipe		
Barrel Condition	☐ Corrosion	☐ Debris accumulation	☐ Structural damage
	☐ Abrasion	☐ Bedload accumulation	☐ None applicable

Horizontal alignment breaks: ft	Vertical alignment breaks: ft

Outlet Characteristics

Outlet Type	☐ Projecting	☐ Headwall	☐ Wingwall	
	☐ Flared end section	☐ Segment connection		
Outlet Condition	☐ Scour hole	☐ Backwatered	☐ Debris accumulation	☐ None applicable
	☐ Perched	Outlet elevation drop: ft		
		Outlet drop condition:		
		Scour hole depth: ft		
Outlet Apron	☐ Channel scour	☐ Excessive deposition	☐ Debris Accumulation	☐ None Applicable

Skew Angle: °	Downstream Invert Elevation: ft (NGVD 29 or NAVD 88)

Obtain Physical Characteristics of Existing Bridge

Elevation of high chord (top of road): ft	Elevation of low chord: ft

Channel Lining	☐ No lining	☐ Concrete	☐ Rock	☐ Other

Skew Angle: °	Bridge width (length): ft

Pier Characteristics (if applicable) ☐

Number of Piers:	Upstream cross-section starting station: ft
Pier Width: ft	Downstream cross-section starting station: ft
Pier Centerline Spacing: ft	

Pier Shape	☐ Square nose and tail	☐ Semi-circular nose and tail	☐ 90° triangular nose and tail
	☐ Twin-cylinder piers with connecting diaphragm	☐ Twin-cylinder piers without connecting diaphragm	☐ Ten pile trestle bent
Pier Condition	☐ Scour	☐ Corrosion	☐ Debris accumulation

Skew angle °

Channel Characteristics

Hydraulic Structure Roughness Coefficients

(Source: Caltrans Highway Design Manual Table 864.3A)		(Source: HEC-RAS User's Manual)	
Type of Structure	n- value	Type of Structure	n- value (normal)

Linned Channels:		Corrugated Metal:	
Portland Cement Concrete	0.014	Subdrain	0.019
Air Blown Mortar (troweled)	0.012	Storm drain	0.024
Air Blown Mortar (untroweled)	0.016	Wood:	
Air Blown Mortar (roughened)	0.025	Stave	0.012
Asphalt Concrete	0.018	Laminated, treated	0.017
Sacked Concrete	0.025	Brickwork:	
Pavement and Gutters:		Glazed	0.013
Portland Cement Concrete	0.015	Lined with cement mortar	0.015
Asphault Concrete	0.016		
Depressed Medians:			
Earth (without growth)	0.040		
Earth (with growth)	0.050		
Gravel	0.055		

Recommended Permissible Velocities for Unlined Channels (Source: Caltrans Highway Design Manual, Table 862.2)

Type of Material in Excavation Section	Intermittent Flow (f/s)	Sustained Flow (f/s)
Fine Sand (Noncolloidal)	2.6	2.6
Sandy Loam (Noncolloidal)	2.6	2.6
Silt Loam (Noncolloidal)	3.0	3.0
Fine Loam	3.6	3.6
Volcanic Ash	3.9	3.6
Fine Gravel	3.9	3.6
Stiff Clay (Colloidal)	4.9	3.9
Graded Material (Noncolloidal)		
Loam to Gravel	6.6	4.9
Silt to Gravel	6.9	5.6
Gravel	7.5	5.9

Coarse Gravel	7.9	6.6
Gravel to Cobbles (Under 150mm)	8.8	6.9
Gravel and Cobbles Over 200mm)	9.8	7.9
Flow Estimation cfs	☐ Supercritical flow	☐ Subcritical flow
Channel Cross-Section Schematic		Channel depth = ft
Average Active Channel Width Take at least five channel width measurments to determine the active channel width. The active channel stage or ordinary high water level is the elevation delineating the hightest water level that has been maintained for a sufficient period of time to leave evidence on the landscape.		Average Active Channel Width = ft

1) ft	2) ft	3) ft	4) ft	5) ft

Boundary Conditions The normal depth option (slope area method) can only be used as a downstream boundary condition for an open-ended reach. Is normal depth appropriate? If no, what is the known starting water surface elevation?	Upstream	slope ft/ft
	Downstream	slope ft/ft
	Known starting water surface elevation Source:	ft

General Considerations

Identify Physical Restrictions	☐ Right-of-way	☐ Utility conflict	☐ Vegetation
	☐ Man-made features	☐ Natural features	☐ Other

Cross-Section Sketches Attached ☐ Yes ☐ No

Site Photograph Documentation Attached ☐ Yes ☐ No

Channel / Overbank Manning's n-value Calculation Attached ☐ Yes ☐ No

Field Notes Attached ☐ Yes ☐ No

CROSS-SECTION SKETCH

Upstream face of structure:

Downstream face of structure:

SITE PHOTOGRAPH DOCUMENTATION

Project Information		Computed:	Date:
		Checked:	Date:
Stream Name:	County:	Route:	Postmile:

Crossing Type	☐ Culvert	☐ Bridge	☐ Other Type/Comments

Distance From:	X-sec. 1 to X-sec. 2: ft	X-sec. 2 to DS face of structure ft	US face of structure to X-Sec. 3 ft	X-sec. 3 to X-sec. 4 ft
Distance From:	Photo Sets 1 & 2 to DS face of structure ft	Photo Sets 3 & 4 to DS face of structure ft	Photo Sets 5 & 6 to US face of structure ft	Photo Sets 7 & 8 to US face of structure ft
Length of Culvert/Bridge:	ft			

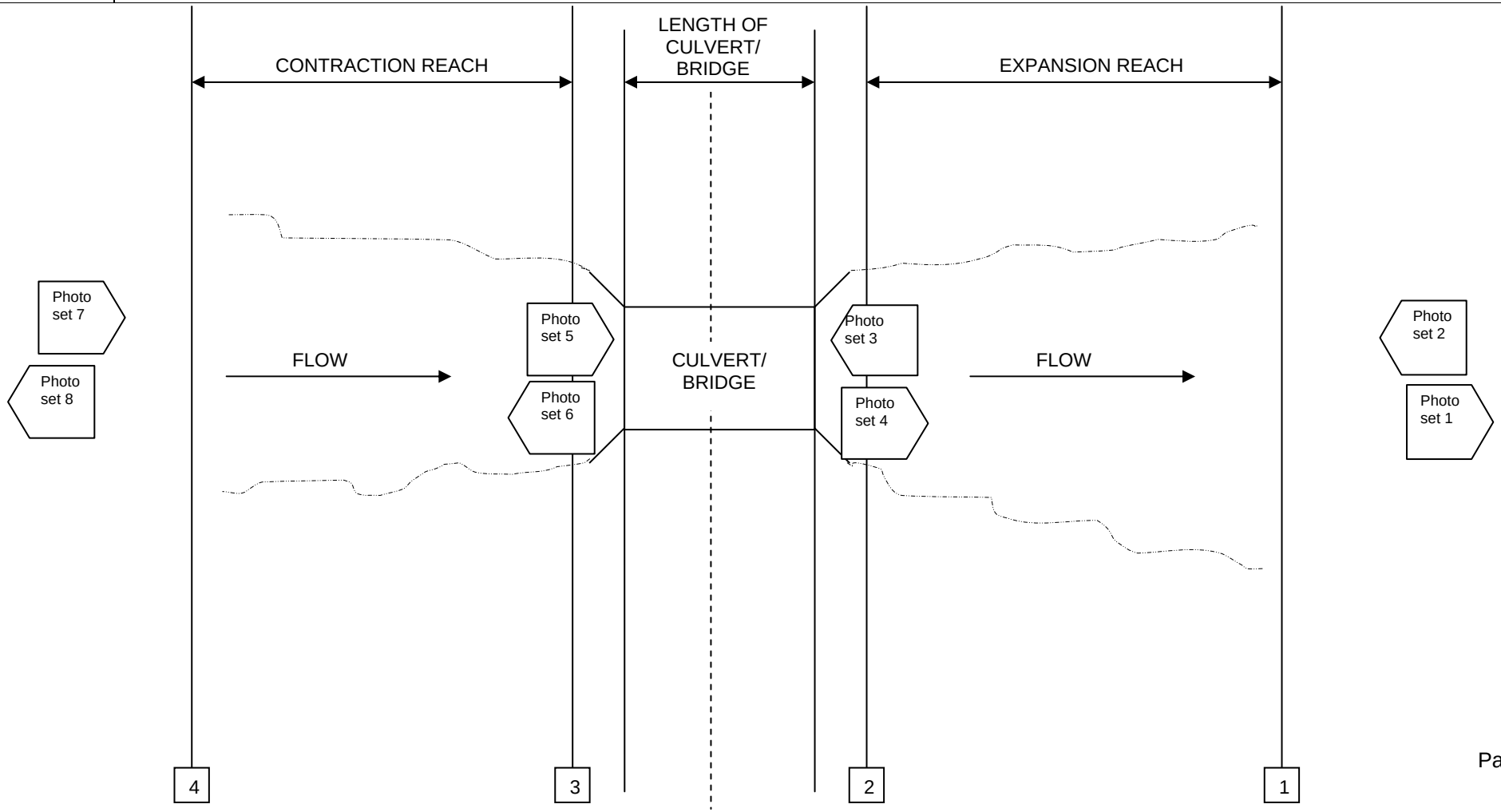

SITE PHOTOGRAPH DOCUMENTATION

Photo Descriptions:

Photo Set 1	
Photo Set 2	
Photo Set 3	
Photo Set 4	
Photo Set 5	
Photo Set 6	
Photo Set 7	
Photo Set 8	

Manning's n Computation - Overbank

Project Information		Computed:	Date:
		Checked:	Date:
Stream Name:	County:	Route:	Postmile:
Aerial Picture Attached:			
Photographs (#'s and locations)			

Is roughness uniform throughout the reach? _____

Note: If not, n-value should be assigned for the AVERAGE condition of the reach

Is roughness uniformly distributed along the cross section? _____

Is a division between the channel and floodplain necessary? _____

Calculation of n-value:

n = (nb + n1 + n2 + n3 + n4)m

where:	Description of Range
nb = base n value for surface	*median size between 1" and 2.5"=0.028 to 0.035, between 2.5" and 10"=0.030 to 0.050*
n1 = surface irregularity factor	*smooth = 0 up to severe at 0.020*
n2 = cross section variation factor	*gradual = 0 up to alternating frequently at 0.015*
n3 = obstructions factor	*assumed to equal 0*
n4 = vegetation factor	*small = 0.002 to very large (average depth of flow is less than 1/2 height of vegetation) at 0.100*
m = sinuosity/meandering factor	*equals 0 for floodplains*

Base n value for surface

nb: Sand channel? _____ if yes, median size of bed material? _____

nb =

median size (in)	nb
0.008	0.012
0.012	0.017
0.016	0.020
0.020	0.022
0.024	0.023
0.031	0.025
0.039	0.026

All other channels:

median size (in)	nb
.04 to .08	0.026 to 0.035
1 to 2.5	0.028 to 0.035
2.5 to 10	0.030 to 0.050
>10	0.040 to 0.070

Notes:

nb = _____

Surface Irregularity

n1:			
	Smooth	Compares to the smoothest, flattest floodplain in a given bed material.	if yes, n1 = 0
	Minor	Is the floodplain slightly irregular in shape. A few rises and dips or sloughs may be more visible on the floodplain.	if yes, n1 = 0.001 - 0.005
	Moderate	Has more rises and dips. Sloughs and hummocks may occur.	if yes, n1 = 0.006 - 0.010
	Severe	Floodplain very irregular in shape. Many rises and dips or sloughs are visible.	if yes, n1 = 0.011 - 0.020

n1 = _____

Notes:

Manning's n Computation - Overbank

Cross Section Variation Factor

n2 = 0.000

Notes: Not applicable to floodplains.

Obstructions factor

n3:			
	Negligible	Does the stream have a few scattered obstructions that occupy < 5% of the cross-sectional area?	if yes, n3 = 0.000 - 0.004
	Minor	Obstructions occupy < 15% of the cross-sectional area and the spacing between obstructions is such that the sphere of influence doesn't extend to other obstructions?	if yes, n3 = 0.005 - 0.015
	Appreciable	Obstructions occupy 15% - 50% of the cross-sectional area and the spacing between obstructions is small enough to be additive?	if yes, n3 = 0.020 - 0.030

n3 = _____

Notes:

Vegetation factor

n4:			
	Small	Does the channel have dense growth of flexible turf grass or weed growth where the flow is at least 2 times the height of the vegetation; tree seedlings of willows, cottonwoods, etc where the average depth of flow is at least three times the height of the vegetation?	if yes, n4 = 0.002 - 0.010
	Medium	Does the channel have turf grass where the average depth of flow is 1-2 times the height of the vegetation; moderately stemmy grass, weeds or tree seedlings growing where the flow is 2-3 times the height of vegetation? Brushy, moderately dense vegetation, similar to 1-2 year old willow trees in dormant season.	if yes, n4 = 0.010 - 0.025
	Large	Does the channel where the average. depth of flow is equal to the height of the vegetation; 8 to 10 year old. willows, cottonwoods intergrown with weeds and brush; where the R = 1.97 ft or bushy willows of 1 year old are in the channel bottom, where R =2.00 ft?	if yes, n4 = 0.025 -0.050
	Very large	Does the channel have turf grass growing where the average depth of flow < 1/2 the height of the vegetation; bushy willows about 1 year old. with weeds intergrown on side slopes; dense cattails in channel bottom; trees intergrown with weeds and brush?	if yes, n4 = 0.050 - 0.100
	Extreme	Does the channel have dense bushy willow, mesquite, and salt cedar (full foliage), or heavy stand of timber, few down trees, depth of reaching branches?	if yes, n4 = 0.100 - 0.200

n4 = _____

Notes:

Sinuosity/meandering factor

m = 1.00

Notes: Not applicable to floodplains.

Manning's n - Overbank n =

FORM 3

GUIDANCE OF SELECTION FISH PASSAGE DESIGN OPTION

GUIDANCE ON SELECTION OF FISH PASSAGE DESIGN OPTION — FORM 3

Project Information		Computed:	Date:
		Checked:	Date:
Stream Name:	County:	Route:	Postmile:

Design Species/ Life Stage		
	☐	All Species
	☐	Adult Anadromous Salmonids
	☐	Adult Non-Anadromous Salmonids
	☐	Juvenile Salmonids
	☐	Native Non-Salmonids
	☐	Non-Native Species

☐ NMFS Active Channel Design Option - The NMFS Active Channel Design Option is a simplified design method that is intended to size a crossing sufficiently large and embedded deep enough into the channel to allow the natural movement of bedload and formation of a stable streambed inside the culvert. Determination of the high and low fish passage design flows, water velocity, and water depth is not required for this option since with stream hydraulic charagcteristics within the culvert are intended to mimic the stream conditions upstream and downstream of the crossing. However, hydraulic analyses for traffic safety, hydraulic impacts, and scour are required.

Criteria for choosing option:

- ☐ New and replacement culvert/bridge installations
- ☐ Passage required for all species
- ☐ Proposed culver/bridge length less than 100 feet
- ☐ Channel slope less than 3%

☐ CA Fish & Game Low-Slope Design Option – The CA Fish & Game Low-Slope Design Option is a modification and replacement of the Active Channel Design Option as presented in Part XII: Fish Passage And Implementation (April 2009) addition to *the California Salmonid Stream Habitat Restoration Manual*. It is a simplified design method that is intended to size a crossing sufficiently large and embedded deep enough into the channel to allow the natural movement of bedload and formation of a stable streambed inside the culvert. Determination of the high and low fish passage design flows, water velocity, and water depth is not required for this option since with stream hydraulic charagcteristics within the culvert are intended to mimic the stream conditions upstream and downstream of the crossing. However, hydraulic analyses for traffic safety, hydraulic impacts, and scour are required.

Criteria for choosing option:

- ☐ New and replacement culvert/bridge installations
- ☐ Passage required for all species
- ☐ Proposed culver/bridge length less than 75 feet
- ☐ Channel slope less than 1%

☐ Hydraulic Design Option - The Hydraulic Design Option is a design process that matches the hydraulic performance of a culvert with the swimming ablitities of a target species and age class of fish. This method targets distinct species of fish and, therefore, does not account for ecosystem requirments of non-target species.

Criteria for choosing option:

GUIDANCE ON SELECTION OF FISH PASSAGE DESIGN OPTION — FORM 3

- ☐ New and replacement culvert/bridge installations (If retrofit installation, see Baffle or Rock Weir Design Options)
- ☐ Target species identified for passage
- ☐ Low to moderate channel slopes (less than 3%)
- ☐ Active channel design or stream simulation design options are not physically feasible

Retrofit Culvert/Bridge Installations

☐ **Baffle Design Option -** The Baffle Design Option is a Hydrualic Design process that is intended to increase flow depth, or to add roughness elements as a measure to reduce flow velocity within the culvert/bridge structure. Determination of the high and low fish passage design flows, water velocity, and water depth is required for this option.

- ☐ Retrofit culvert/bridge installation
- ☐ Little bedload material movement
- ☐ Existing culvert/bridge is structurally sound
- ☐ Target species identified for passage
- ☐ Low to moderate channel slopes
- ☐ Active channel design or stream simulation design options are not physically feasible

☐ **Rock Weir Design Option -** The Rock Weir Design Option is a Hydraulic Design process that is intended to increase flow depth, or add roughness elements as a measure to reduce flow velocity, or to increase the channel slope downstream of the culvert/bridge. Determination of the high and low fish passage design flows, water velocity, and water depth is required for this option.

- ☐ Retrofit culvert/bridge installations
- ☐ Perched condition at outlet
- ☐ Steep slope at inlet
- ☐ Target species identified for passage
- ☐ Active channel design or stream simulation design options are not physically feasible

☐ **Stream Simulation Design Option -** The Stream Simulation Design Option is a design process that is intended to mimic the natural stream processes within a culvert. Fish passage, sediment transport, flood and debris conveyance within the crossing are intended to function as they would in a natural channel. Determination of the high and low fish passage design flows, water velocity, and water depth is not required for this options since the stream hydraulic characteristics within the culvert are designed to mimic the stream conditions upstream and downstream of the crossing.

Criteria for choosing option:

- ☐ New and replacement culvert/bridge installations
- ☐ Passage required for all species
- ☐ Culvert/bridge length greater than 100 feet

GUIDANCE ON SELECTION OF FISH PASSAGE DESIGN OPTION	FORM 3

☐	Channel width should be less than 20 feet
☐	Minimum culvert/bridge width no less than 6 feet
☐	Culvert/bridge slope does not greatly exceed slope of natural channel, slopes of 6 % or less
☐	Narrow stream valleys

Selected Design Option:

Basis for Selection:

Seek Agency Approval: ☐ Yes ☐ No

FORM 4

GUIDANCE ON METHODOLOGY FOR HYDROLOGIC ANALYSIS

GUIDANCE ON METHODOLOGY FOR HYDROLOGIC ANALYSIS [1, 2] FORM 4

Project Information		Computed:	Date:
		Checked:	Date:
Stream Name:	County:	Route:	Postmile:

Summary of Methods for Estimating Peak Design Discharges for Use in Hydraulic Analysis

Ungaged Streams

☐ Regional Regression[3, 4]

Data Requirements	Limitations	Guidance
▪ Drainage area ▪ Mean annual precipitation ▪ Altitude index	▪ Peak discharge value for flow under natural conditions unaffected by urban development and little or no regulation by lakes or reservoirs ▪ Ungaged channel	The most recently published USGS report for estimating peak discharges may be used. The user should exercise caution to ensure that the reports are used only for the conditions and locations for which they are recommended.

Rainfall-Runoff Models

☐ NRCS (TR 55)[5]

Data Requirements	Limitations	Guidance
▪ 24-hour Rainfall ▪ Rainfall distribution ▪ Runoff curve number ▪ Concentration time ▪ Drainage area	▪ Small or midsize catchment (<8 km^2) ▪ Maximum of 10 subwatersheds ▪ Concentration time range from 0.1-10 hour (tabular hydrograph method limit <2 hour) ▪ Runoff is overland and channel flow ▪ Simplified channel routing ▪ Negligible channel storage	TR-55 focuses on small urban and urbanizing watersheds.

☐ HEC-1/HEC-HMS[6, 7] (SCS Dimnesionless, Snyder Unit, Clark Unit Hydrographs)

Data Requirements	Limitations	Guidance
▪ Watershed/subbasin parameters ▪ Precipitation depth, duration, frequency, and distribution ▪ Precipitation losses ▪ Unit hydrograph parameters ▪ Streamflow routing and diversion parameters	▪ Simulations are limited to a single storm event ▪ Streamflow routing is performed by hydrologic routing methods and is therefore not appropriate for unsteady state routing conditions.	Can be used for watersheds which are: small or large, simple or complex, and developed or undeveloped.

[1] Caltrans Highway Design Manual, Chapter 810 Hydrology, Topic 819 Estimating Design Discharge
[2] FEMA Guidelines and Specifications, Appendix C, Section C.1
[3] USGS Water-Resources Investigation 77-21 (Magnitude and Frequency of Floods in California)
[4] USGS Open-File Report 93-419 (Methods for Estimating Magnitude and Frequency of floods in the Southwestern United States)
[5] United States Department of Agriculture, Natural Resources Conservation Service, Urban Hydrology for Small Watersheds Technical Release 55, June 1986. ftp://ftp.wcc.nrcs.usda.gov/downloads/hydrology_hydraulics/tr55/tr55.pdf
[6] HEC-1 User's Manual
[7] HEC-HMS User's Manual
[8] Bulletin 17B

GUIDANCE ON METHODOLOGY FOR HYDROLOGIC ANALYSIS [1, 2] FORM 4

GAGED STREAMS

☐ Statistical Methods[8]

Data Requirements	Limitations	Guidance
▪ 10 or more years of gaged flood records	▪ Gage data is usually only available for midsized and large catchments ▪ Appropriate station and/or generalized skew coefficient relationship applied	For watersheds with less than 50 years of record, compare with results of appropriate USGS regional regression equations. For watersheds with less than 25 years of record, compare with results of appropriate USGS regional regresssion equations and/or HEC-1/HEC-HMS model results.

☐ Basin Transfer of Gage Data

Data Requirements	Limitations	Guidance
▪ Discharge and area for gaged watershed ▪ Area for ungaged watershed	▪ Similar hydrologic characteristics ▪ Channel storage	Must obtain approval of transfer technique from hydraulics engineer prior to use.

☐ Fish Passage Flows

▪ Streamflow hydrograph ▪ Flow duration curve		Lower and upper fish passage flows define the range of flows a culvert should contain suitable conditions for fish passage.

Selected Hydrologic Method:

Basis for Selection:

[1] Caltrans Highway Design Manual, Chapter 810 Hydrology, Topic 819 Estimating Design Discharge
[2] FEMA Guidelines and Specifications, Appendix C, Section C.1
[3] USGS Water-Resources Investigation 77-21 (Magnitude and Frequency of Floods in California)
[4] USGS Open-File Report 93-419 (Methods for Estimating Magnitude and Frequency of floods in the Southwestern United States)
[5] United States Department of Agriculture, Natural Resources Conservation Service, Urban Hydrology for Small Watersheds Technical Release 55, June 1986. ftp://ftp.wcc.nrcs.usda.gov/downloads/hydrology_hydraulics/tr55/tr55.pdf
[6] HEC-1 User's Manual
[7] HEC-HMS User's Manual
[8] Bulletin 17B

GUIDANCE ON METHODOLOGY FOR HYDROLOGIC ANALYSIS [1, 2]	FORM 4

Verify Reasonableness and Recommended Peak Discharges

Source	50% Annual Probability (2-Year Flood Event) (cfs)	10% Annual Probability (10-Year Flood Event) (cfs)	4% Annual Probability (25-Year Flood Event) (cfs)	2% Annual Probability (50-Year Flood Event) (cfs)	1% Annual Probability (100-Year Flood Event) (cfs)	High Fish Passage Design Flow (cfs)	Low Fish Passage Design Flow (cfs)
Effective Study Peak Discharges							
Recommended Peak Discharges							

Hydrologic Analysis Index Attached ☐ Yes ☐ No

Hydrologic Analysis Calculations Attached ☐ Yes ☐ No

[1] Caltrans Highway Design Manual, Chapter 810 Hydrology, Topic 819 Estimating Design Discharge
[2] FEMA Guidelines and Specifications, Appendix C, Section C.1
[3] USGS Water-Resources Investigation 77-21 (Magnitude and Frequency of Floods in California)
[4] USGS Open-File Report 93-419 (Methods for Estimating Magnitude and Frequency of floods in the Southwestern United States)
[5] United States Department of Agriculture, Natural Resources Conservation Service, Urban Hydrology for Small Watersheds Technical Release 55, June 1986. ftp://ftp.wcc.nrcs.usda.gov/downloads/hydrology_hydraulics/tr55/tr55.pdf
[6] HEC-1 User's Manual
[7] HEC-HMS User's Manual
[8] Bulletin 17B

HYDROLOGIC ANALYSES INDEX

FORM 4

Project Information		Computed:	Date:
		Checked:	Date:
Stream Name:	County:	Route:	Postmile:

Flooding Source/Stream Name	Hydrologic Method/Model Used	Method/Model Analysis Date	Exhibit No.	
			Paper Copy	Electronic Copy

FORM 6A

NMFS ACTIVE CHANNEL DESIGN OPTION

FISH PASSAGE: NMFS ACTIVE CHANNEL DESIGN OPTION — FORM 6A

Project Information		Computed:	Date:
		Checked:	Date:
Stream Name:	County:	Route:	Postmile:

Hydrology Results - Peak Discharge Values

2% Annual Probability (50-Year Flood Event)	cfs	1% Annual Probability (100-Year Flood Event)	cfs

Establish Culvert Setting and Dimensions

Culvert Width - The minimum culvert width shall be equal to, or greater than, 1.5 times the average active channel width.

Average Active Channel Width = ft	Average Active Channel Width X 1.5 = ft	Culvert Width = ft

Culvert Length - Must be less than 100 feet.

Culvert Length ft

Culvert Embedment - The bottom of the culvert shall be buried into the streambed 20% to 40% of culvert height at the outlet, and not more than 40% of the culvert height at the inlet.

Upstream Embedment = ft (≤40% of culvert rise)

Downstream Embedment = ft (≥20% to ≤40% of culvert rise)

Culvert Slope - The culvert shall be placed level (0% slope).

Upstream invert elevation = ft	Downstream invert elevation = ft

Summarize Proposed Culvert Physical Characterstics

Inlet Characteristics

Inlet Type	☐ Projecting	☐ Headwall	☐ Wingwall
	☐ Flared end section	☐ Segment connection	☐ Skew Angle: °

Barrel Characteristics

Diameter: in	Fill height above culvert: ft
Height/Rise: - ft	Number of barrels:
Width/Span: - ft	

FISH PASSAGE: NMFS ACTIVE CHANNEL DESIGN OPTION — FORM 6A

Culvert Type	☐ Arch	☐ Box	☐ Circular
	☐ Pipe-Arch	☐ Elliptical	
Culvert Material	☐ HDPE	☐ Steel Plate Pipe	☐ Concrete Pipe
	☐ Spiral Rib / Corrugated Metal Pipe		

Horizontal alignment breaks: - ft	Vertical alignment breaks: - ft

Outlet Characteristics

Outlet Type	☐ Projecting	☐ Headwall	☐ Wingwall
	☐ Flared end section	☐ Segment connection	Skew Angle: °

Develop and run Hydraulic Models to compute water surface elevations, flow depths, and channel velocities for the 50- and 100-year peak or design discharges reflecting existing and project conditions.

Maximum Allowable Inlet Water Surface Elevation

Shall not be greater than 50% of the culvert height or diameter above the top of the culvert inlet for the 100-Year peak flood, and without objectionable backwater.	Allowable (maximum) WSEL: ft

Allowable Hydraulic Impacts

Is the crossing located within a floodplain as designated by the Federal Emergency Management Agency or another responsible state or local agency? ☐ Yes ☐ No

If yes, establish allowable hydraulic impacts and hydraulic design requirements with the appropriate agency. Attach results.

Will the project result in the increase capacity of an existing crossing? ☐ Yes ☐ No

If yes, will it significantly increase downstream peak flows due to the reduced upstream attenuation? ☐ Yes ☐ No

If yes, consult District Hydraulics. Further analysis may be needed.

Velocity Summary – Proposed Conditions maximum culvert velocities at inlet, barrel, and outlet transition for the peak or design discharge:

Culvert Velocity	Design Flow Velocity (ft/s)
Culvert Inlet Velocity (evaluated at x-section immediately located upstream of culvert)	
Culvert Barrel Velocity (evaluated through Culvert Output in HEC-RAS)	
Culvert Outlet Velocity(evaluated at x-section immediately located downstream of culvert)	

Do the velocities exceed the permissible scour velocities? ☐ Yes ☐ No

If yes, revise design to reduce velocities and rerun hydraulic analyses to verfiy, or design erosion protection.

Proposed Plan and Profile Drawing Attached ☐ Yes ☐ No	Hydraulic Analysis Index Sheet Attached ☐ Yes ☐ No

FORM 6A1

CA FISH & GAME LOW-SLOPE DESIGN OPTION

FISH PASSAGE: CA FISH & GAME LOW-SLOPE DESIGN OPTION — FORM 6A1

Project Information		Computed:	Date:
		Checked:	Date:
Stream Name:	County:	Route:	Postmile:

Hydrology Results - Peak Discharge Values

2% Annual Probability (50-Year Flood Event)	cfs	1% Annual Probability (100-Year Flood Event)	cfs

Establish Culvert Setting and Dimensions

Culvert Width - The minimum culvert width shall be equal to, or greater than, 1.25 times the average bankfull width.

Average Bankfull Width = ft	Average Backfill Width X 1.25 = ft	Culvert Width = ft

Culvert Length - Must be less than 75 feet.

Culvert Length ft

Culvert Embedment - The bottom of the culvert shall be buried into the streambed 20% to 40% of culvert rise throughout.

Upstream Embedment = ft

Downstream Embedment = ft

Culvert Slope - The culvert shall be placed at the natural stream slope.

Upstream invert elevation = ft	Downstream invert elevation = ft

Summarize Proposed Culvert Physical Characterstics

Inlet Characteristics

Inlet Type	☐ Projecting	☐ Headwall	☐ Wingwall
	☐ Flared end section	☐ Segment connection	☐ Skew Angle: °

Barrel Characteristics

Diameter: in	Fill height above culvert: ft
Height/Rise: – ft	Number of barrels:
Width/Span: – ft	

FISH PASSAGE: CA FISH & GAME LOW-SLOPE DESIGN OPTION — FORM 6A1

Culvert Type	☐ Arch	☐ Box	☐ Circular
	☐ Pipe-Arch	☐ Elliptical	
Culvert Material	☐ HDPE	☐ Steel Plate Pipe	☐ Concrete Pipe
	☐ Spiral Rib / Corrugated Metal Pipe		

Horizontal alignment breaks: – ft	Vertical alignment breaks: – ft

Outlet Characteristics

Outlet Type	☐ Projecting	☐ Headwall	☐ Wingwall
	☐ Flared end section	☐ Segment connection	Skew Angle: °

Develop and run Hydraulic Models to compute water surface elevations, flow depths, and channel velocities for the 50- and 100-year peak or design discharges reflecting existing and project conditions.

Maximum Allowable Inlet Water Surface Elevation

Shall not be greater than 50% of the culvert height or diameter above the top of the culvert inlet for the 100-Year peak flood, and without objectionable backwater.	Allowable (maximum) WSEL: ft

Allowable Hydraulic Impacts

Is the crossing located within a floodplain as designated by the Federal Emergency Management Agency or another responsible state or local agency? ☐ Yes ☐ No

If yes, establish allowable hydraulic impacts and hydraulic design requirements with the appropriate agency. Attach results.

Will the project result in the increase capacity of an existing crossing? ☐ Yes ☐ No

If yes, will it significantly increase downstream peak flows due to the reduced upstream attenuation? ☐ Yes ☐ No

If yes, consult District Hydraulics. Further analysis may be needed.

Velocity Summary – Proposed Conditions maximum culvert velocities at inlet, barrel, and outlet transition for the peak or design discharge:

Culvert Velocity	Design Flow Velocity (ft/s)
Culvert Inlet Velocity (evaluated at x-section immediately located upstream of culvert)	
Culvert Barrel Velocity (evaluated through Culvert Output in HEC-RAS)	
Culvert Outlet Velocity(evaluated at x-section immediately located downstream of culvert)	

Do the velocities exceed the permissible scour velocities? ☐ Yes ☐ No

If yes, revise design to reduce velocities and rerun hydraulic analyses to verfiy, or design erosion protection.

Proposed Plan and Profile Drawing Attached ☐ Yes ☐ No	**Hydraulic Analysis Index Sheet Attached** ☐ Yes ☐ No

FORM 6B

HYDRAULIC DESIGN OPTION

FISH PASSAGE: HYDRAULIC DESIGN OPTION — FORM 6B

Project Information		Computed:	Date:
		Checked:	Date:
Stream Name:	County:	Route:	Postmile:

General Considerations

Hydraulic controls (e.g. boulders weirs, log sills, etc.) in the channel upstream and/or downstream of a crossing can be used to provide a continuous low flow path through the crossing and stream reach. They can be used to facilitate fish passage by establishing the following desirable conditions: control depth and water velocity within the crossing, concentrate low flows, provide resting pools upstream and downstream of the crossing, and control erosion of the streambed and banks.

Baffles or weirs shall not be used in the design of new or replacement culverts in order to meet the hydraulic design criteria.

The following **Adverse Hydraulic Conditions** are generally considered to be detrimental to efficient fish passage and should be avoided. The degree to which they impede fish passage depends upon the magnitude of the condition. Crossing designed by the Hydraulic Design Option should be evaluated for the following conditions at high design flow for fish passage: Super critical flow, Hydraulic jumps, Highly turbulent conditions, and Abrubt changes in water surface elevation in inlet and outlet.

Hydrology Results - Peak Discharge Values

50% Annual Probability (2-Year Flood Event)	cfs	10% Annual Probability (10-Year Flood Event)	cfs
2% Annual Probability (50-Year Flood Event)	cfs	1% Annual Probability (100-Year Flood Event)	cfs
High Fish Passage Design Flow	cfs	Low Fish Passage Design Flow	cfs

Estabilsh Proposed Culvert Settings and Dimensions

Culvert Width - The minimum culvert width shall be 3 feet.

Proposed Culvert Width: ft

Culvert Embedment - Where physically possible, the bottom of the culvert shall be buried into the streambed a minimum of 20% of the height of the culvert below the elevation of the tailwater control point downstream of the culvert. The minimum embedment should be at least 1 foot. Where physical conditions preclude embedment, the hydraulic drop at the outlet of a culvert shall not exceed the limits specified.

Upstream Embedment: ft (≥ 1 foot)

Downstream Embedment: ft (≥ 20% of culvert rise and ≥ 1 foot)

Culvert Slope - The culvert slope shall not exceed the slope of the stream through the reach in which the crossing is being placed. If embedment of the culvert is not possible, the maximum slope shall not exceed 0.5%.

Upstream invert elevation: ft (NGVD 29 or NAVD 88)	Downstream invert elevation: ft (NGVD 29 or NAVD 88)

Summarize Proposed Culvert Physical Characterstics

Inlet Characteristics

Inlet Type	☐ Projecting	☐ Headwall	☐ Wingwall
	☐ Flared end section	☐ Segment connection	☐ Skew Angle: °

FISH PASSAGE: HYDRAULIC DESIGN OPTION — FORM 6B

Barrel Characteristics

Diameter:	in	Fill height above culvert:	ft
Height/Rise:	ft	Length:	ft
Width/Span:	ft	Number of barrels:	

Culvert Type	☐ Arch	☐ Box	☐ Circular
	☐ Pipe-Arch	☐ Elliptical	
Culvert Material	☐ HDPE	☐ Steel Plate Pipe	☐ Concrete Pipe
	☐ Spiral Rib / Corrugated Metal Pipe		

Horizontal alignment breaks:	ft	Vertical alignment breaks:	ft

Outlet Characteristics

Outlet Type	☐ Projecting	☐ Headwall	☐ Wingwall
	☐ Flared end section	☐ Segment connection	Skew Angle: °

Summarize Proposed Bridge Physical Characterstics

Bridge Physical Characteristics

Elevation of high chord (top of road):	ft	Elevation of low chord:	ft

Channel Lining	☐ No lining	☐ Concrete	☐ Rock	☐ Other

Skew Angle:	°	Bridge width (length):	ft

Pier Characteristics (if applicable) ☐

Number of Piers:	ft	Upstream cross-section starting station:	ft
Pier Width:	ft	Downstream cross-section starting station:	ft
Pier Centerline Spacing:	ft	Skew angle:	°

Pier Shape	☐ Square nose and tail	☐ Semi-circular nose and tail	☐ 90° triangular nose and tail
	☐ Twin-cylinder piers with connecting diaphragm	☐ Twin-cylinder piers without connecting diaphragm	☐ Ten pile trestle bent

Establish High Design Flow for Fish Passage - Depending on species, develop high design flows:

Species/Life Stage	Percent Annual Exceedance Flow	Percentage of 2-Yr Recurrence Interval Flow	Design Flows (cfs)
☐ Adult Anadromous Salmonids	1%	50%	

☐ Adult Non-Anadromous Salmonids	5%	30%	
☐ Juvenile Salmonids	10%	10%	
☐ Native Non-Salmonids	5%	30%	
☐ Non-Native Species	10%	10%	

Establish Low Design Flow for Fish Passage - Depending on species, develop low design flows:

Species/Life Stage	Percent Annual Exceedance Flow	Alternate Minimum Flow (cfs)	Design Flow (cfs)
☐ Adult Anadromous Salmonids	50%	3	
☐ Adult Non-Anadromous Salmonids	90%	2	
☐ Juvenile Salmonids	95%	1	
☐ Native Non-Salmonids	90%	1	
☐ Non-Native Species	90%	1	

Establish Maximum Average Water Velocity and Minimum Flow Depth in Culvert (At high design flow) - Depending on culvert length and/or species, select Maximum Average Water Veolcity and Minimum Flow Depth.

Species/Life Stage	Maximum Average Water Velocity at High Fish Design Flow (ft/sec)	Minimum Flow Depth at Low Fish Design Flow (ft)
☐ Adult Anadromous Salmonids	6 (Culvert length <60 ft)	1.0
	5 (Culvert length 60-100 ft)	
	4 (Culvert length 100-200 ft)	
	3 (Culvert length 200-300 ft)	
	2 (Culvert length >300 ft)	
☐ Adult Non-Anadromous Salmonids	4 (Culvert length <60 ft)	0.67
	4 (Culvert length 60-100 ft)	
	3 (Culvert length 100-200 ft)	
	2 (Culvert length 200-300 ft)	
	2 (Culvert length >300 ft)	
☐ Juvenile Salmonids	1	0.5

☐ Native Non-Salmonids	Species specific swimming performance data is required for the use of the hydraulic design option for non-salmonids. Hydraulic design is not allowed for these species without this data.
☐ Non-Native Species	

Establish Maximum Outlet Drop

Hydraulic drops between the water surface in the culvert to the pool below the culvert should be avoided for all cases. Where fish passage is required and a hydraulic drop is unavoidable, it's magnitude should be evaluated for both high design flow and low design flow and shall not exceed the values shown below. If a hydraulic drop occurs at the culvert outlet, a jump pool of at least 2 feet in depth shall be provided.

Species/Life Stage	Maximum Drop (ft)
☐ Adult Anadromous Salmonids	1
☐ Adult Non-Anadromous Salmonids	1
☐ Juvenile Salmonids	0.5
☐ Native Non-Salmonids	Where fish passage is required for native non-salmonids no hydraulic drop shall be allowed at the culvert outlet unless data is presented which will establish the leaping ability and leaping behavior of the target species of fish.
☐ Non-Native Species	

Maximum Allowable Inlet Water Surface Elevation

Culvert ☐

A culvert is required to pass the 10-year peak discharge without causing pressure flow in the culvert,	Allowable WSEL: ft
And shall not be greater than 50% of the culvert height or diameter above the top of the culvert inlet for the 100-Year peak flood.	Allowable WSEL: ft

Bridge ☐

A bridge is required to pass the 50-year peak discharge with freeboard, vertical clearance between the lowest structural member and the water surface elevation,	Allowable WSEL: ft
While passing the 100-year peak or design discharge under low chord of the bridge.	Allowable WSEL: ft

Establish Allowable Hydraulic Impacts

Is the crossing located within a floodplain as designated by the Federal Emergency Management Agency or another responsible state or local agency?
☐ Yes ☐ No

If yes, establish allowable hydraulic imacts and hydraulic design requirements with the appropriate agency. Attach results.

Will the project result in the increase capacity of an existing crossing? ☐ Yes ☐ No

If yes, will it significantly increase downstream peak flows due to the reduced upstream attenuation? ☐ Yes ☐ No

If yes, consult District Hydraulics. Further analysis may be needed.

Will the project result in a reduction in flow area for the 100-year peak discharge? ☐ Yes ☐ No

If yes, establish the allowable increase in upstream water surface elevation and establish how far upstream the increased water surface may extend.

Develop and run Hydraulic Models to compute water surface elevations, flow depths, and channel velocities fo the low fish passage design flow, the high fish passage design flow and for the 2-, 10-, 50-, and 100-year peak or design discharges reflecting existing and project conditions.
☐ Yes ☐ No

Evaluate computed water surface elevations, flow depths, and channel velocities: ☐ Yes ☐ No

Maximum average velocity in culvert at high fish design flow: ft/s

Does the velocity exceed the maximum allowable for the culvert length and design species? ☐ Yes ☐ No

If yes, modify design to comply and rerun hydraulic anaylses to verify.

Minimum flow depth in culvert at low fish design flow: ft

Does the depth equal or not exceed the mimimum allowable for the culvert length and design species? ☐ Yes ☐ No

If yes, modify design to comply and rerun hydraulic anaylses to verify.

Drop between the water surface elevation in the culvert and the outlet channel for:

High Fish Passage Flow:	ft	Low Fish Passage Flow:	ft

Does the drop between the water surface in the culvert and the outlet channel at high or low design fish flows exceed the maximum allowable for the design species? ☐ Yes ☐ No

If yes, modify design to avoid a drop if possible. If a drop is unavoidable modify design to meet criteria and provide a jump pool at least two feet in depth. Rerun hydraulic analyses to verfiy.

Water Surface elevation at inlet for the 10-year peak discharge:

Does the water surface elevation exceed the allowable? ☐ Yes ☐ No

If yes, modify design to comply and rerun hydraulic analyses to verify.

Maximum Culvert and Channel velocities at inlet and outlet transition for the peak or design discharge:

Range of velocities for Inlet transition:	ft/s	to	ft/s
Range of velocities for Culvert portion:	ft/s	to	ft/s
Range of velocities for Outlet Transition:	ft/s	to	ft/s

Do the velocities exceed the permissible scour velocities? ☐ Yes ☐ No

If yes, revise design to reduce velocities and rerun hydraulic analyses to verify, or design erosion protection.

Comparison between existing and project future condition water surface elevations for the 10-Year and 100-Year peak flow:

Cross-Section	10-Yr WSEL	10-Yr WSEL	WSEL Difference	100-Year WSEL	100-Year WSEL	WSEL Difference
	Existing	Future	(ft)	Existing	Future	(ft)

FISH PASSAGE: HYDRAULIC DESIGN OPTION						FORM 6B
	Conditions (ft)	Conditions (ft)		Conditions (ft)	Conditions (ft)	
1						
2						
3						
4						

If WSELs increase, does the increase exceed the maximum elevation? ☐ Yes ☐ No	Maximum elevation: ft
If yes, revise the design and rerun hydraulic analyses to verify.	
If WSELs decrease, does it appear that the attenuation of peak flow will significally change? ☐ Yes ☐ No	
If yes, evaluate to determine if downstream hydraulic impacts are significant and modify design as appropriate.	
Proposed Plan and Profile Drawing Attached ☐ Yes ☐ No	
Hydraulic Analysis Index Sheet Attached ☐ Yes ☐ No	

FORM 6C

STREAM SIMULATION DESIGN OPTION

FISH PASSAGE: STREAM SIMULATION DESIGN OPTION — FORM 6C

Project Information		Computed:	Date:
		Checked:	Date:
Stream Name:	County:	Route:	Postmile:

General Considerations

The **Stream Simulation** method strives to result in the same passage conditions within the culvert as those seen in the selected reference reach, to the extent practical. The Stream Simulation process includes these four steps: 1) Develop long profile and define the reference reach, 2) Establish proposed structure settings and dimensions, 3) Design bed material and shape, and 4) Check bed stability.

Hydrology Results - Peak Discharge Values

50% Annual Probability (2-Year Flood Event)	cfs	10% Annual Probability (10-Year Flood Event)	cfs
4% Annual Probability (25-Year Flood Event)	cfs	2% Annual Probability (50-Year Flood Event)	cfs
1% Annual Probability (100-Year Flood Event)	cfs		

Develop Long Profile and Define the Reference Reach

Attach channel profile sheet. ☐ Yes ☐ No

Identify reference reach on long profile with characteristics that will be appropriate for the replacement culvert. ☐ Yes ☐ No

Identify channel type and key features that vary depending on the bed mobility. ☐ Yes ☐ No

Identify location of bed material samples on profile. ☐ Yes ☐ No

Identify typical channel cross-sections. ☐ Yes ☐ No

Identify channel characteristics and processes on long profile. ☐ Yes ☐ No

Plot stream/culvert profile or range of profiles for consideration. ☐ Yes ☐ No

Illustrate the typical reference reach cross-section:

Bankfull Channel: The channel defined by the bankfull discharge, which is the discharge that fills a stable alluvial channel up to the elevation of the active floodplain. Identification of the bankfull channel should be based on the determination of the minimum channel width to depth ratio determined from cross sectional measurements of stable channel reaches upstream and downstream of the proposed culvert location.

Bankfull channel width =	ft

Estabilsh Proposed Culvert Settings and Dimensions

Culvert Width: Culvert width is the width needed to span the bankfull channel. If permanent banklines are constructed of rock, adequate culvert width must be provided to span the bed plus the size of the rock on both banks. For an initial estimate of the minimum culvert width, add twice the diameter of the largest material in the bed to the bankfull width. A stability analysis might show that other bed material is needed.

Culvert Width =	ft

Culvert Length: Culvert length must be greater than 100 feet

Culvert Length =	ft

Culvert Embedment: A circular culvert embedded into the streambed no less than 30% but no more than 50% of its rise is a good practical guide.

Upstream embedment = ft	Downstream embedment = ft

Culvert Slope Culvert slope does not greatly exceed slope of natural channel, slopes of 6% or less

Upstream invert elevation = ft (NGVD 29 or NAVD 88)	Downstream invert elevation = ft (NGVD 29 or NAVD 88)

Summarize Proposed Culvert Physical Characterstics

Inlet Characteristics

Inlet Type	☐ Projecting	☐ Headwall	☐ Wingwall
	☐ Flared end section	☐ Segment connection	☐ Skew Angle: °

Barrel Characteristics

Diameter: in	Fill height above culvert: ft
Height/Rise: ft	Length: ft
Width/Span: ft	Number of barrels:

Culvert Type	☐ Arch	☐ Box	☐ Circular
	☐ Pipe-Arch	☐ Elliptical	

Culvert Material	☐ HDPE	☐ Steel Plate Pipe	☐ Concrete Pipe
	☐ Spiral Rib / Corrugated Metal Pipe		

Horizontal alignment breaks: ft	Vertical alignment breaks: ft

Outlet Characteristics

Outlet Type	☐ Projecting	☐ Headwall	☐ Wingwall
	☐ Flared end section	☐ Segment connection	Skew Angle: °

Summarize Proposed Bridge Physical Characterstics

Bridge Physical Characteristics

Elevation of high chord (top of road): ft (NGVD 29 or NAVD 88)	Elevation of low chord: ft (NGVD 29 or NAVD 88)

Channel Lining	☐ No lining	☐ Concrete	☐ Rock	☐ Other

Pier Characteristics (if applicable) ☐

Number of Piers: ft	Upstream cross-section starting station: ft
Pier Width: ft	Downstream cross-section starting station: ft
Pier Centerline Spacing: ft	Skew angle: °

Pier Shape	☐ Square nose and tail	☐ Semi-circular nose and tail	☐ 90° triangular nose and tail
	☐ Twin-cylinder piers with connecting diaphragm	☐ Twin-cylinder piers without connecting diaphragm	☐ Ten pile trestle bent

Define Bed Material and Shape

Create reference grain-size distribution curve from reference reach material.

D_{16} = in. D_{50} = in. D_{84} = in.

Bed Stability/Mobility Analysis

Reference Reach:

FISH PASSAGE: STREAM SIMULATION DESIGN OPTION	FORM 6C

1. Choose bed stability/mobility method.

Modified Shields: ☐ Yes ☐ No	Critical Unit Discharge: ☐ Yes ☐ No
2. Pick a minimum of 5 flows between active channel and bankfull flows (or greater).	Q_a = cfs
	Q_b = cfs
	Q_c = cfs
	Q_d = cfs
	Q_e = cfs
3. Calculate driving force (τ_c or q) for each flow in Step 2.	$\tau_{c(a)}$ = psf OR $q_{(a)}$ = ft^2/s
	$\tau_{c(b)}$ = psf OR $q_{(b)}$ = ft^2/s
	$\tau_{c(c)}$ = psf OR $q_{(c)}$ = ft^2/s
	$\tau_{c(d)}$ = psf OR $q_{(d)}$ = ft^2/s
	$\tau_{c(e)}$ = psf OR $q_{(e)}$ = ft^2/s

4. Calculate critical shear stress or critical unit discharge to entrain D_{84} particle.

$\tau_{c\text{-}D84(a)}$ = psf OR $q_{c\text{-}D84}$ = ft^2/s

Is $\tau_{c\text{-}D84}$ or $q_{c\text{-}D84}$ > tc or q for any of the driving forces in Step 3? ☐ Yes ☐ No

If D_{84} is not mobile for any of the flows picked in Step 2, choose greater flow values. ☐

If all flows in Step 2 cause movement in D_{84} particle, choose lower flows until a flow is found where D_{84} particle is stable. ☐

5. Plot τ_c or q vs Q. From graph, find flow that corresponds to $\tau_{c\text{-}D84}$ or $q_{c\text{-}D84}$. This is the critical flow that will cause initial movement of D_{84} particle.

$Q_{critical}$ = cfs

Design Reach:

6. Choose a D_{84} particle size for the design stream simulation culvert or bridge bed that is within 25% of reference reach D_{84} diameter.

D_{84} = in.

7. Shift reference reach gradation curve to match intial D_{84} particle size. From shifted gradation cuve determine corresponding D_{50} and D_{16}.	D_{50} =			in.
	D_{16} =			in.
8. Repeat Step 2.	Q_a =			cfs
	Q_b =			cfs
	Q_c =			cfs
	Q_d =			cfs
	Q_e =			cfs
9. Repeat Step 3.	$\tau_{c(a)}$ =	psf OR	$q_{(a)}$ =	ft^2/s
	$\tau_{c(b)}$ =	psf OR	$q_{(b)}$ =	ft^2/s
	$\tau_{c(c)}$ =	psf OR	$q_{(c)}$ =	ft^2/s
	$\tau_{c(d)}$ =	psf OR	$q_{(d)}$ =	ft^2/s
	$\tau_{c(e)}$ =	psf OR	$q_{(e)}$ =	ft^2/s

10. Repeat Step 4.

$\tau_{c\text{-}D84(a)}$ = psf OR $q_{c\text{-}D84}$ = ft^2/s

Is $\tau_{c\text{-}D84}$ or $q_{c\text{-}D84}$ > tc or q for any of the driving forces in Step 3? ☐ Yes ☐ No

If D_{84} is not mobile for any of the flows picked in Step 2, choose greater flow values. ☐

If all flows in Step 2 cause movement in D_{84} particle, choose lower flows until a flow is found where D_{84} particle is stable. ☐

11. Repeat Step 5.

$Q_{critical}$ = cfs

12. Compare $Q_{crtical}$ from reference reach and design reach.

Is Qcritical similar between the 2 reaches? ☐ Yes ☐ No

If no, adjust D_{84} particle size and re-shift gradation curve for design reach. ☐

If subsequent D_{84} diameter trial(s) for design reach exceeds D_{84} for reference reach by more than 25%, reevaluate culvert variables (diameter, slope, etc.) or bridge variables (length, height, etc.). ☐

13. Use Fuller-Thompson method to calculate D_8 and D_{16} particle sizes that will promote high density bed mix and low porosity.

D_8 (calculated) =	in.	D_{16} (calculated) =	in.
D_8 (design curve) =	in.	D_{16} (design curve) =	in.

If D_8 and/or D_{16} values from design curve are greater than calculated D_8 and/or D_{16} values, change design reach gradation curve to match calculated values. ☐

14. Determine stream simulation culvert or bridge bed minimum thickness.

Minimum thickness = 4 × D_{84} (design reach) = in.

Creek Feature Stability Analysis (ie. Rock bands, Boulder Clusters, Banklines)

1. Establish bed design flows	25-Year design storm or 50-Year design storm, Q =	cfs
2. Determine average water velocity in culvert	Culvert inlet velocity, V_c =	ft/s
	Culvert outlet velocity, V_c =	ft/s
	Average culvert velocity, V_c =	ft/s
3. Determine average field rock size diameter	Average field rock size diameter, D_{field} =	ft
4. Select minimum stable diameter (D_{50}) corresponding to average culvert velocity	Minimum stable diameter, D_{50} =	ft
5. Calculated Caltrans RSP Class rough diameter	Calculated Caltrans RSP Class rough diameter, D_{rsp} =	ft

If minimum stable diameter is greater than average field rock size diameter, the average field rock size diameter must be increased.
If minimum stable diameter is less than the average field rock size diameter, select the corresponding RSP class rough diameter.

6. Selected Caltrans RSP Class	Selected Caltrans RSP Class =

Maximum Allowable Inlet Water Surface Elevation

Culvert ☐

A culvert is required to pass the 10-year peak discharge without causing pressure flow in the culvert,	Allowable WSEL:	ft
And shall not be greater than 50% of the culvert height or diameter above the top of the culvert inlet for the 100-Year peak flood.	Allowable WSEL:	ft

Bridge ☐

A bridge is required to pass the 50-year peak discharge with freeboard, vertical clearance between the lowest structural member and the water surface elevation,	Allowable WSEL: ft
While passing the 100-year peak or design discharge under low chord of bridge.	Allowable WSEL: ft

Establish Allowable Hydraulic Impacts

Is the crossing located within a floodplain as designated by the Federal Emergency Management Agency or another responsible state or local agency? ☐ Yes ☐ No

If yes, establish allowable hydraulic impacts and hydraulic design requirements with the appropriate agency. Attach results.

Will the project result in increase capacity of an existing crossing? ☐ Yes ☐ No

If yes, will it significantly increase downstream peak flows due to the reduced upstream attenuation? ☐ Yes ☐ No

If yes, consult District Hydraulics. Further analysis may be needed.

Will the project result in a reduction in flow area for the 100-year peak discharge? ☐ Yes ☐ No

If yes, establish the allowable increase in upstream water surface elevation and establish how far upstream the increased water surface may extend.

Develop and run Hydraulic Models to compute water surface elevations, flow depths, and channel velocities for the 2-, 10-, 50-, and 100-year peak or design discharges reflecting existing and project conditions. ☐ Yes ☐ No

Evaluate computed water surface elevations, flow depths, and channel velocities. ☐ Yes ☐ No

Water surface elevation at inlet for the 10-year peak discharge: ft

Does the water surface elevation exceed the allowable elevation? ☐ Yes ☐ No

If yes, modify design to comply and rerun hydraulic analyses to verfiy.

Maximum Culvert and Channel velocities at inlet and outlet transition for the peak or design discharge:

Range of velocities for Inlet transition:	ft/s	to	ft/s
Range of velocities for Culvert portion:	ft/s	to	ft/s
Range of velocities for Outlet Transition:	ft/s	to	ft/s

Do the velocities exceed the permissible scour velocities? ☐ Yes ☐ No

If yes, revise design to reduce velocities and rerun hydraulic analyses to verfiy, or design erosion protection.

Comparison between existing and project future condition water surface elevations for the 10-Year and 100-Year peak flow:

FISH PASSAGE: STREAM SIMULATION DESIGN OPTION — FORM 6C

Cross-Section	10-Yr WSEL	10-Yr WSEL	Difference	100-Year WSEL	100-Year WSEL	Difference
	Existing Conditions (ft)	Future Conditions (ft)	(ft)	Existing Conditions (ft)	Future Conditions (ft)	(ft)
1						
2						
3						
4						

If WSELs increase, does the increase exceed the maximum elevation? ☐ Yes ☐ No | Maximum elevation: ft

If yes, revise the design and rerun hydraulic analyses to verify.

If WSELs decrease, does it appear that the attenuation of peak flow will significally change? ☐ Yes ☐ No

If yes, evaluate to determine if downstream hydraulic impacts are significant and modify design as appropriate.

Proposed Profile Drawing Attached ☐ Yes ☐ No

Hydraulic Analysis Index Sheet Attached ☐ Yes ☐ No

Bed Stability Analysis Calculations Attached ☐ Yes ☐ No

Grain-Size Distribution Curve Attached ☐ Yes ☐ No

FORM 6D

HYDRAULIC BAFFLE DESIGN OPTION

FISH PASSAGE: HYDRAULIC BAFFLE DESIGN OPTION — FORM 6D

Project Information:		Computed:	Date:
		Checked:	Date:
Stream Name:	County:	Route:	Postmile:

General Considerations - Baffles shall be used in the design retrofitted culverts in order to meet the hydraulic design criteria.

Hydrology Results - Peak Discharge Values

2-Year Flood Event (50% Annual Probability)	– cfs	Low Fish Passage Design Flow	cfs
100-Year Flood Event (1% Annual Probability)	cfs	High Fish Passage Design Flow	cfs

Summarize Retrofitted Culvert Physical Characterstics

Inlet Characteristics - Retrofitted design to inlet: ☐ Yes ☐ No

Inlet Type	☐ Projecting	☐ Headwall	☐ Wingwall
	☐ Flared end section	☐ Segment connection	☐ Skew Angle: °

Barrel Characteristics - Retrofitted design to barrel: ☐ Yes ☐ No

Diameter:	in	Fill height above culvert:	ft
Height/Rise:	– ft	Length:	ft
Width/Span:	– ft	Number of barrels:	

Culvert Type	☐ Arch	☐ Box	☐ Circular
	☐ Pipe-Arch	☐ Elliptical	
Culvert Material	☐ HDPE	☐ Steel Plate Pipe	☐ Concrete Pipe
	☐ Spiral Rib / Corrugated Metal Pipe		

Horizontal alignment breaks:	– ft	Vertical alignment breaks:	– ft

Outlet Characteristics - Retrofitted design to outlet: ☐ Yes ☐ No

Outlet Type	☐ Projecting	☐ Headwall	☐ Wingwall
	☐ Flared end section	☐ Segment connection	Skew Angle: °

Proposed Baffle Settings and Dimensions

Baffle height:	ft	Baffle width:	ft
Baffle spacing (along longitudinal axis):	ft		

Selecting Weir Coefficient, C

1) Estimate the highest weir coefficient using the highest head for the previously calculated crest width (breadth of crest of weir) from the HEC-22 Broad Crested Weir Coefficient Table.	C = $ft^{0.5}$/sec
2) Run the proposed HEC-RAS model and find the average head (weir average depth) over a weir for the Low Fish Passage Flow from HEC-RAS results.	Weir Average Depth = ft
3) Given the average head (weir average depth) from the HEC-RAS results and the crest width (breadth of crest of weir), find a second weir coefficient from the HEC-22 Broad Crested Weir Coefficient Table.	C = $ft^{0.5}$/sec
4) Run the proposed HEC-RAS model with the second weir coefficient from Step C and find the average head (weir average depth) over a weir for the Low Fish Passage Flow from HEC-RAS results.	Weir Average Depth = ft
5) Given the average head (weir average depth) from the HEC-RAS results and the crest width (breadth of crest of weir), find a third weir coefficient from the HEC-22 Broad Crested Weir Coefficient Table.	C = $ft^{0.5}$/sec
6) Compare weir coefficient from Step C and Step E. If weir coefficients are close in value, then use Step E weir coefficient for remaining HEC-RAS modeling. If weir coefficients are not close in value, repeat Steps C-F until an appropriate weir coefficient is found.	Modeled broad-crested weir coefficient: $ft^{0.5}$/sec

Verify High Design Flow for Fish Passage - Depending on species, develop high design flows:

Species/Life Stage	Percent Annual Exceedance Flow	Percentage of 2-Yr Recurrence Interval Flow	Design Flows (cfs)
☐ Adult Anadromous Salmonids	1%	50%	
☐ Adult Non-Anadromous Salmonids	5%	30%	
☐ Juvenile Salmonids	10%	10%	
☐ Native Non-Salmonids	5%	30%	
☐ Non-Native Species	10%	10%	

Verify Low Design Flow for Fish Passage - Depending on species, develop low design flows:

Species/Life Stage	Percent Annual Exceedance Flow	Alternate Minimum Flow (cfs)	Design Flow (cfs)
☐ Adult Anadromous Salmonids	50%	3	
☐ Adult Non-Anadromous Salmonids	90%	2	
☐ Juvenile Salmonids	95%	1	
☐ Native Non-Salmonids	90%	1	
☐ Non-Native Species	90%	1	

FISH PASSAGE: HYDRAULIC BAFFLE DESIGN OPTION — FORM 6D

Verify Maximum Average Water Velocity (at High Design Flow) and Minimum Flow Depth in Culvert (at Low Design Flow) Depending on culvert length and/or species, select Maximum Average Water Veolcity and Minimum Flow Depth.

Species/Life Stage	Maximum Average Water Velocity at High Fish Design Flow (ft/sec)	Minimum Flow Depth at Low Fish Design Flow (ft)
☐ Adult Anadromous Salmonids	6 (Culvert length <60 ft)	1.0
	5 (Culvert length 60-100 ft)	
	4 (Culvert length 100-200 ft)	
	3 (Culvert length 200-300 ft)	
	2 (Culvert length >300 ft)	
☐ Adult Non-Anadromous Salmonids	4 (Culvert length <60 ft)	0.67
	4 (Culvert length 60-100 ft)	
	3 (Culvert length 100-200 ft)	
	2 (Culvert length 200-300 ft)	
	2 (Culvert length >300 ft)	
☐ Juvenile Salmonids	1	0.5
☐ Native Non-Salmonids	Species specific swimming performance data is required for the use of the hydraulic design option for non-salmonids. Hydraulic design is not allowed for these species without this data.	
☐ Non-Native Species		

Verify Maximum Outlet Drop - Hydraulic drops between the water surface in the culvert to the pool below the culvert should be avoided for all cases. Where fish passage is required and a hydraulic drop is unavoidable, it's magnitude should be evaluated for both high design flow and low design flow and shall not exceed the values shown below. If a hydraulic drop occurs at the culvert outlet, a jump pool of at least 2 feet in depth shall be provided.

Species/Life Stage	Maximum Drop (ft)
☐ Adult Anadromous Salmonids	1
☐ Adult Non-Anadromous Salmonids	1
☐ Juvenile Salmonids	0.5
☐ Native Non-Salmonids	Where fish passage is required for native non-salmonids no hydraulic drop shall be allowed at the culvert outlet unless data is presented which will establish the leaping ability and leaping behavior of the target species of fish.
☐ Non-Native Species	

Develop and run hydraulic models to compute water surface elevations, flow depths, and velocities for Low Fish Design Flow, High Fish Design Flow, and the 100-Year peak or design discharge reflecting existing and proposed conditions. Evaluate results.

Maximum average velocity in culvert at High Fish Design Flow: ft/s

Does the velocity exceed the maximum allowable for the culvert length and design species? ☐ Yes ☐ No

If yes, modify design to comply and rerun hydraulic anaylses to verify.

FISH PASSAGE: HYDRAULIC BAFFLE DESIGN OPTION — FORM 6D

Minimum flow depth in culvert at Low Fish Design Flow: ft

Does the depth equal or not exceed the mimimum allowable for the culvert length and design species? ☐ Yes ☐ No

If yes, modify design to comply and rerun hydraulic anaylses to verify.

Depth impacts at 100-Year Flood Flow:

If water surface elevations increase, does the increase exceed the maximum elevation? ☐ Yes ☐ No Maximum elevation: HP= ft

If yes, revise the design and rerun hydraulic analyses to verify.

Allowable Hydraulic Impacts:

Is the crossing located within a floodplain as designated by the Federal Emergency Management Agency or another responsible state or local agency? ☐ Yes ☐ No

If yes, establish allowable hydraulic impacts and hydraulic design requirements with the appropriate agency. Attach results.

Will the project result in the decrease capacity of an existing crossing? ☐ Yes ☐ No

If yes, will it significantly increase upstream backwater effects due to the reduced upstream attenuation? ☐ Yes ☐ No

If yes, consult District Hydraulics. Further analysis may be needed.

Drop between the water surface elevation in the culvert and the outlet channel:

Low Fish Design Flow Drop Length: ft

Does the drop between the water surface in the culvert and the outlet channel at high or low design fish flows exceed the maximum allowable for the design species? ☐ Yes ☐ No

If yes, modify design to avoid a drop if possible. If a drop is unavoidable modify design to meet criteria and provide a jump pool at least two feet in depth. Rerun hydraulic analyses to verfiy.

Calculate Energy Dissipation Factor (EDF)

Water Density, γ = 62.4 lbm/ft^3	High Fish Flow, Q: cfs	Culvert Slope, S: ft/ft	X-sectional flow area in between baffles, A: ft^2

EDF = γQS / A : ft-lb/ft^3/s

Velocity Criteria Versus Design (High Fish Passage Flow)

FISH PASSAGE: HYDRAULIC BAFFLE DESIGN OPTION FORM 6D

Culvert Velocity	Design Flow Velocity (ft/s)	Criteria Flow Velocity (ft/s)
Culvert Inlet Velocity (evaluated at x-section immediately located upstream of culvert)		
Culvert Barrel Velocity (evaluated through Culvert Output in HEC-RAS)		
Culvert Outlet Velocity (evaluated at x-section immediately located downstream of culvert)		

Depth Criteria Versus Design (Low Fish Passage Flow)

Cross-Section	Design Flow Depth (ft)	Criteria Flow Depth (ft)

Proposed Plan and Profile Drawing Attached ☐ Yes ☐ No

Hydraulic Analysis Index Sheet Attached ☐ Yes ☐ No

FORM 6E

HYDRAULIC ROCK WEIR DESIGN OPTION

FISH PASSAGE: HYDRAULIC ROCK WEIR DESIGN OPTION — FORM 6E

Project Information		Computed:	Date:
		Checked:	Date:
Stream Name:	County:	Route:	Postmile:

General Considerations - Rock weirs shall be used in the design of retrofitted or new bridges and culverts in order to meet the hydraulic design criteria.

Hydrology Results - Peak Discharge Values

50% Annual Probability (2-Year Flood Event)	cfs	Low Fish Passage Design Flow	cfs
2% Annual Probability (50-Year Flood Event)	cfs	High Fish Passage Design Flow	cfs
1% Annual Probability (100-Year Flood Event)	cfs		

Summarize Retrofitted Culvert Physical Characterstics

Inlet Characteristics - Retrofitted design to inlet: ☐ Yes ☐ No

Inlet Type	☐ Projecting	☐ Headwall	☐ Wingwall
	☐ Flared end section	☐ Segment connection	☐ Skew Angle: °

Barrel Characteristics - Retrofitted design to barrel: ☐ Yes ☐ No

Diameter:	in	Fill height above culvert:	ft
Height/Rise:	ft	Length:	ft
Width/Span:	ft	Number of barrels:	

Culvert Type	☐ Arch	☐ Box	☐ Circular
	☐ Pipe-Arch	☐ Elliptical	
Culvert Material	☐ HDPE	☐ Steel Plate Pipe	☐ Concrete Pipe
	☐ Spiral Rib / Corrugated Metal Pipe		

Horizontal alignment breaks:	ft	Vertical alignment breaks:	ft

Outlet Characteristics - Retrofitted design to outlet: ☐ Yes ☐ No

Outlet Type	☐ Projecting	☐ Headwall	☐ Wingwall
	☐ Flared end section	☐ Segment connection	Skew Angle: °

FISH PASSAGE: HYDRAULIC ROCK WEIR DESIGN OPTION — FORM 6E

Summarize Retrofitted Bridge Physical Characterstics

Bridge Physical Characteristics Retrofitted design to bridge structure: ☐ Yes ☐ No

Elevation of high chord (top of road): ft	Elevation of low chord: ft

Channel Lining	☐ No lining	☐ Concrete	☐ Rock	☐ Other

Skew Angle: – °	Bridge width (length): ft

Pier Characteristics (if applicable) Retrofitted design to piers: ☐ Yes ☐ No

Number of Piers: ft	Upstream cross-section starting station: ft
Pier Width: ft	Downstream cross-section starting station: ft
Pier Centerline Spacing: ft	Skew angle: – °

Pier Shape	☐ Square nose and tail	☐ Semi-circular nose and tail	☐ 90° triangular nose and tail
	☐ Twin-cylinder piers with connecting diaphragm	☐ Twin-cylinder piers without connecting diaphragm	☐ Ten pile trestle bent

Determine Rock Weir Dimensions

Rock weir size (RSP class):	Embedment depth: ft
Crest width: ft	Height: ft
Side slope: 1.5:1	Rock weir plan view radius ft
	Rock weir base width ft

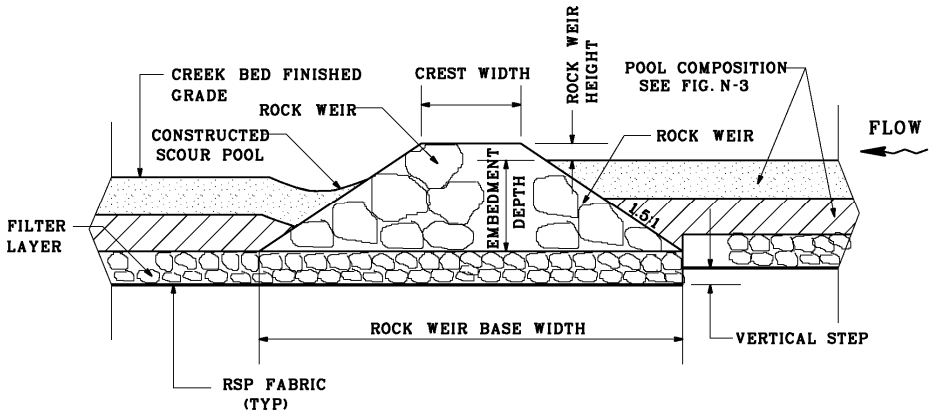

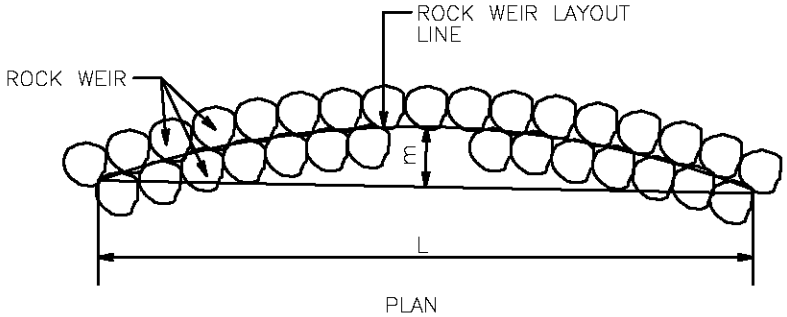

Determine Step-Pool Composition and Thickness

Tsp: ft

Rock weir backfill thickness (1/2 Tsp): ft

Native bed: ☐ Yes ☐ No Thickness (if applicable): ft

Clean sand and gravel: ☐ Yes ☐ No Thickness (if applicable): ft

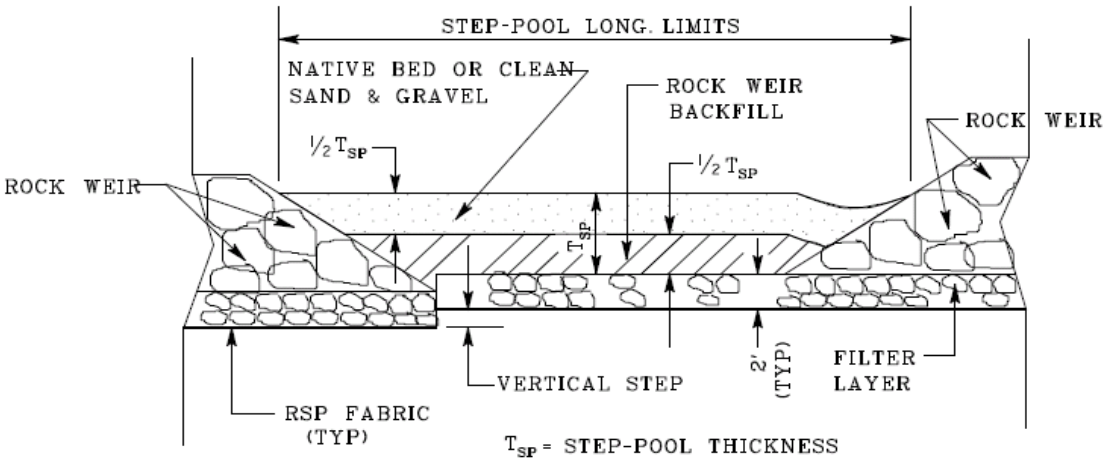

Step Pool Profile

Design Bank and Toe Revetment

RSP revetment: ☐ Yes ☐ No

Combined RSP and vegetative revetment: ☐ Yes ☐ No

If yes, contact District Hydraulics Engineer and District Landscape Architect to coordinate design.

Parallel flow: ☐ Yes ☐ No If parallel flow, apply a 0.67 factor to design velocity.

Impinging flow: ☐ Yes ☐ No If impinging flow, apply 1.33 factor to design velocity.

Bank slope (α): °

Design velocity (Suggested 50-Yr max velocity): ft/s

SG = 2.65	R = 70°	W =

$$W = \frac{0.00002}{(SG - 1)^3} \frac{V^6}{SIN^3 (r - a)} SG$$

Field contributing features (i.e. high water marks):	
Freeboard: ft	
Design height: ft	
RSP class (outside layer):	RSP thickness: ft
RSP class (backing layer):	RSP thickness: ft
RSP class (inner layer):	RSP thickness: ft

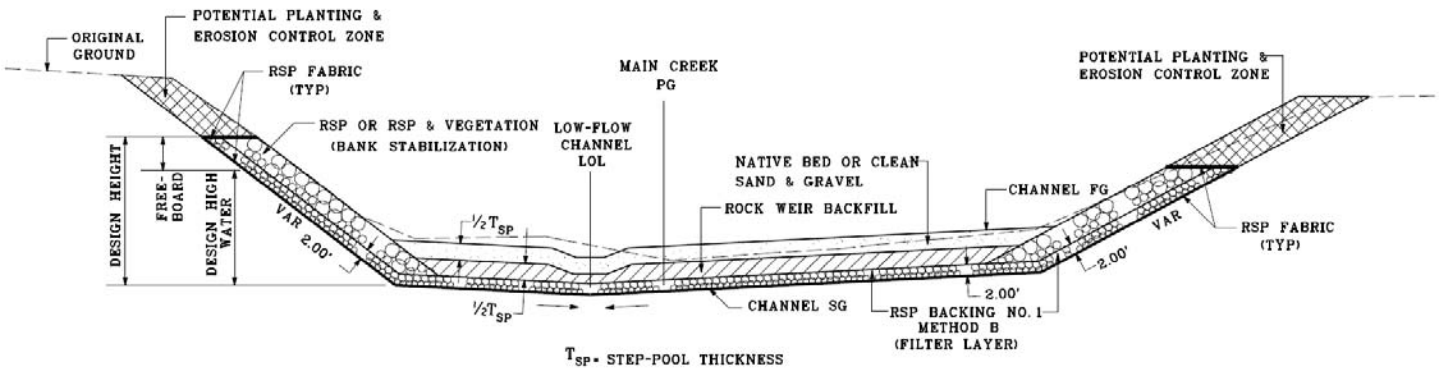

Step Pool Cross Section

Determine Rock Weir Series Dimensions

Number of steps:	Number of step pools:
Number of rock weirs:	Spacing of rock weirs: ft
Height of rock weir: ft	Jump pool depth ft

Selecting Weir Coefficient, C

1) Estimate the highest weir coefficient using the highest head for the previously calculated crest width (breadth of crest of weir) from the HEC-22 Broad Crested Weir Coefficient Table.	C = $ft^{0.5}$/sec
2) Run the proposed HEC-RAS model and find the average head (weir average depth) over a weir for the Low Fish Passage Flow from HEC-RAS results.	Weir Average Depth = ft
3) Given the average head (weir average depth) from the HEC-RAS results and the crest width (breadth of crest of weir), find a second weir coefficient from the HEC-22 Broad Crested Weir Coefficient Table.	C = $ft^{0.5}$/sec
4) Run the proposed HEC-RAS model with the second weir coefficient from Step C and find the average head (weir average depth) over a weir for the Low Fish Passage Flow from HEC-RAS results.	Weir Average Depth = ft

5) Given the average head (weir average depth) from the HEC-RAS results and the crest width (breadth of crest of weir), find a third weir coefficient from the HEC-22 Broad Crested Weir Coefficient Table.	C = $ft^{0.5}$/sec
6) Compare weir coefficient from Step C and Step E. If weir coefficients are close in value, then use Step E weir coefficient for remaining HEC-RAS modeling. If weir coefficients are not close in value, repeat Steps C-F until an appropriate weir coefficient is found.	Modeled broad-crested weir coefficient: $ft^{0.5}$/sec

Determine Rock Weir Low-Flow Notch/Channel Dimensions

Base Width: ft	Top Width: ft
Depth: ft	

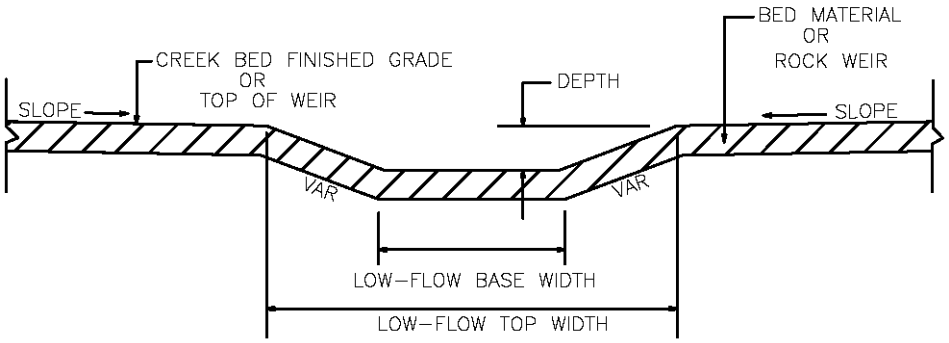

Low Flow Notch / Channel

Verify High Design Flow for Fish Passage - Depending on species, develop high design flows:

Species/Life Stage	Percent Annual Exceedance Flow	Percentage of 2-Yr Recurrence Interval Flow	Design Flows (cfs)
☐ Adult Anadromous Salmonids	1%	50%	
☐ Adult Non-Anadromous	5%	30%	
☐ Juvenile Salmonids	10%	10%	
☐ Native Non-Salmonids	5%	30%	
☐ Non-Native Species	10%	10%	

Verify Low Design Flow for Fish Passage - Depending on species, develop low design flows:

Species/Life Stage	Percent Annual Exceedance Flow	Alternate Minimum Flow (cfs)	Design Flow (cfs)
☐ Adult Anadromous Salmonids	50%	3	
☐ Adult Non-Anadromous	90%	2	
☐ Juvenile Salmonids	95%	1	
☐ Native Non-Salmonids	90%	1	
☐ Non-Native Species	90%	1	

FISH PASSAGE: HYDRAULIC ROCK WEIR DESIGN OPTION FORM 6E

Verify Maximum Average Water Velocity (at High Design Flow) and Minimum Flow Depth in Culvert (at Low Design Flow) Depending on culvert length and/or species, select Maximum Average Water Veolcity and Minimum Flow Depth.

Species/Life Stage	Maximum Average Water Velocity at High Fish Design Flow (ft/sec)	Minimum Flow Depth at Low Fish Design Flow (ft)
☐ Adult Anadromous Salmonids	6 (Culvert length <60 ft)	1.0
	5 (Culvert length 60-100 ft)	
	4 (Culvert length 100-200 ft)	
	3 (Culvert length 200-300 ft)	
	2 (Culvert length >300 ft)	
☐ Adult Non-Anadromous Salmonids	4 (Culvert length <60 ft)	0.67
	4 (Culvert length 60-100 ft)	
	3 (Culvert length 100-200 ft)	
	2 (Culvert length 200-300 ft)	
	2 (Culvert length >300 ft)	
☐ Juvenile Salmonids	1	0.5
☐ Native Non-Salmonids	Species specific swimming performance data is required for the use of the hydraulic design option for non-salmonids. Hydraulic design is not allowed for these species without this data.	
☐ Non-Native Species		

Verify Maximum Outlet Drop - Hydraulic drops between the water surface in the culvert to the pool below the culvert should be avoided for all cases. Where fish passage is required and a hydraulic drop is unavoidable, it's magnitude should be evaluated for both high design flow and low design flow and shall not exceed the values shown below. If a hydraulic drop occurs at the culvert outlet, a jump pool of at least 2 feet in depth shall be provided.

Species/Life Stage	Maximum Drop (ft)
☐ Adult Anadromous Salmonids	1
☐ Adult Non-Anadromous Salmonids	1
☐ Juvenile Salmonids	0.5
☐ Native Non-Salmonids	Where fish passage is required for native non-salmonids no hydraulic drop shall be allowed at the culvert outlet unless data is presented which will establish the leaping ability and leaping behavior of the target species of fish.
☐ Non-Native Species	

Develop and run hydraulic models to compute water surface elevations, flow depths, and velocities for Low Fish Design Flow, High Fish Design Flow, and the 100-Year peak or design discharge reflecting existing and proposed conditions. Evaluate results.

Maximum average velocity in culvert at High Fish Design Flow: ft/s

Does the velocity exceed the maximum allowable for the culvert length and design species? ☐ Yes ☐ No

If yes, modify design to comply and rerun hydraulic anaylses to verify.

FISH PASSAGE: HYDRAULIC ROCK WEIR DESIGN OPTION — FORM 6E

Minimum flow depth in culvert at Low Fish Design Flow: ft

Does the depth equal or not exceed the mimimum allowable for the culvert length and design species? ☐ Yes ☐ No

If yes, modify design to comply and rerun hydraulic anaylses to verify.

Depth impacts at 100-Year Flood Flow:

If water surface elevations increase, does the increase exceed the maximum elevation? ☐ Yes ☐ No Maximum elevation: ft

If maximum elevation is exceeded for bridge, check 50-Year water surface elevation and determine if freeboard exists. Consult Structures Hydraulics for freeboard validation.

Allowable Hydraulic Impacts:

Is the crossing located within a floodplain as designated by the Federal Emergency Management Agency or another responsible state or local agency? ☐ Yes ☐ No

If yes, establish allowable hydraulic impacts and hydraulic design requirements with the appropriate agency. Attach results.

Will the project result in the decrease capacity of an existing crossing? ☐ Yes ☐ No

If yes, will it significantly increase upstream backwater effects due to the reduced upstream attenuation? ☐ Yes ☐ No

If yes, consult District Hydraulics. Further analysis may be needed.

Drop between the water surface elevation in the culvert and the outlet channel:

Low Fish Design Flow Drop Length: ft

Does the drop between the water surface in the culvert and the outlet channel at high or low design fish flows exceed the maximum allowable for the design species? ☐ Yes ☐ No

If yes, modify design to avoid a drop if possible. If a drop is unavoidable modify design to meet criteria and provide a jump pool at least two feet in depth. Rerun hydraulic analyses to verfiy.

Velocity Criteria Versus Design (High Fish Passage Flow)

Bridge / Culvert Velocity	Design Flow Velocity (ft/s)	Criteria Flow Velocity (ft/s)
Culvert Inlet Velocity (evaluated at x-section immediately located upstream of culvert)		
Culvert Barrel Velocity (evaluated through Culvert Output in HEC-RAS)		
Culvert Outlet Velocity (evaluated at x-section immediately located downstream of culvert)		

FISH PASSAGE: HYDRAULIC ROCK WEIR DESIGN OPTION		FORM 6E
Depth Criteria Versus Design (Low Fish Passage Flow)		
Cross-Section	Design Flow Depth (ft)	Criteria Flow Depth (ft)
Proposed Plan and Profile Drawing Attached ☐ Yes ☐ No		
Hydraulic Analysis Index Sheet Attached ☐ Yes ☐ No		