STATE OF CALIFORNIA

DEPARTMENT OF TRANSPORTATION

REQUEST FOR PROPOSALS

FOR DESIGN AND CONSTRUCTION ON STATE HIGHWAY IN

SAN DIEGO ON I-805 FROM JUST NORTH OF SR-52 TO JUST NORTH OF MIRA MESA BOULEVARD

CONTRACT NO. 11-2T2004

PROJECT ID 11000201914

11-SD-805-PM 23.2/26.7

Federal Aid Project

Addendum No. 2 Issued November 9, 2011

The Department issues this Addendum No. 2 to inform Proposers of the following changes and corrections to the RFP.

INSTRUCTIONS TO PROPOSERS

The Instructions to Proposers is modified as indicated by the deletions and additions set forth below.

Form 9 Proposal Price

Form 9 is deleted and replaced with the revised Form 9 Proposal Price adding a line item for "Railroad Costs" attached to this Addendum.

BOOK 1 DESIGN-BUILD CONTRACT

The Book 1, Design-Build Contract, is modified as indicated by the deletions and additions set forth below.

Section 1.5 "Referenced Standards and Specifications" is modified as indicated below:

1.5 Referenced Standards and Specifications

Except as otherwise specified in the Contract Documents or otherwise directed by Department, Work specified by the number, symbol or title of any standard established by reference to a described publication affecting any portion of the Project shall comply with the latest edition or revision thereof and amendments and supplements thereto in effect ~~on~~ as of the Request For Proposals (RFP) issue Date unless modified by Addendum or Change Order~~the Proposal Due Date~~.

Section 10.2.2 "Highway Planting Establishment" is modified as indicated below:

10.2.2 Highway Planting Establishment

Notwithstanding anything to the contrary in Section 10.2, requirements regarding maintenance of trees, shrubs, vines and perennials furnished under the Contract Documents are set forth in Section 20 of the Standard Specifications. After Substantial Completion, there will be a ~~360~~ 365 Calendar Day Type 2 Plant Establishment period.

Section 19.2.2.5 "Unresolved Disputes" is modified as indicated below:

19.2.2.5 Unresolved Disputes

If the Dispute is not resolved by the tenth day by the Department's ~~District~~ Corridor Director and the Design-Builder's equivalent manager, the Parties shall proceed with the provisions of Section 19.2.3.

BOOK 2 PROJECT REQUIREMENTS

The Book 2, Project Requirements, is modified as indicated by the deletions and additions set forth below.

Section 1 General

Section 1.3.3 "General Description" is modified as indicated below:

1.3.3 General Description

The Design-Builder shall not rely on the physical description contained in this Section 1 to identify all Project components. The Design-Builder shall determine the full scope of the Project through thorough examination of the RFP and the Project Site, or as may be reasonably inferred from such examination.

The Project generally consists of designing and constructing one (1) High Occupancy Vehicles (HOV)/Bus Rapid Transit (BRT) lane in each direction from just north of SR-52 to just north of Mira Mesa Boulevard and the south facing Direct Access Ramps at Carroll Canyon Road.. Additional major responsibilities will be environmental management, public relations, railroad and utility coordination, among other things.

The Project features will include but are not limited to~~)~~:

- Median widening of the Governor Drive undercrossing
- Median widening of the Rose Canyon Bridge and Overhead
- Outside widening of both the existing northbound and southbound Carroll Canyon (Soledad Canyon) Bridge and Overhead (BOH)
- Construction of the new south facing Carroll Canyon Direct Access Ramps (DAR)
- Construction of the Carroll Canyon Tie Back Walls
- Outside widening of the northbound Mira Mesa Boulevard undercrossing
- Noise abatement which includes the berm /wall combination along the southbound off-ramp to Governor Drive
- One HOV/BRT lane in each direction from just north of SR-52 which will join, be compatible, and provide continuous HOV/BRT lanes with Contract EA 2T0404
- All I-805 North median improvements including the construction of a concrete median barrier, all median grading, ultimate median drainage, all median signs, any required electrical for lighting and sign illumination, all structural section components including AC and PCC paving for the Ultimate I-805 North facility
- Partial outside widening from La Jolla Village Drive to the Carroll Canyon Bridge and Overhead which includes grading, drainage, retaining walls, any required electrical, signs, all structural section components including AC and PCC paving
- Ultimate outside widening in the northbound direction from the Carroll Canyon BOH to the northern limits of the project including all grading, drainage, retaining walls, electrical, signs, all structural section components including AC and PCC paving

- Fiber optics from the south end of the northbound Carroll Canyon BOH to the fiber optic vault located at approximately station 1490+00.00
- All modifications of existing signalization
- Landscaping and irrigation
- Environmental compliance and mitigation
- Signing and striping
- Lighting
- Public information activities
- Visual quality management
- Erosion control including slope stabilization including temporary and permanent storm water pollution prevention measures.

Section 1.3.4 "Cooperation" is modified as indicated below:

1.3.4 Cooperation

Attention is directed to Section 7-1.14, Cooperation," and Section 8-1.10, "Utility and Non-Highway Facilities," of the Standard Specifications and these special provisions.

~~It is anticipated that work by other contractors may be in progress adjacent to or within the limits of this project during progress of the work on this contract~~.

It is anticipated that work by other contractors may be in progress adjacent to or within the limits of this project during progress of the work on this contract. Should construction be under way by other forces or by other contractors within or adjacent to the limits of the work specified or should work of any other nature be under way by other forces within or adjacent to those limits, the Design-Builder shall cooperate with all the other contractors or other forces to the end that any delay or hindrance to their work will be avoided. The right is reserved to perform other or additional work at or near the site (including material sources) at any time, by the use of other forces.

When 2 or more contractors are employed on related or adjacent work, or obtain materials from the same material source, each shall conduct their operations in such a manner as not to cause any unnecessary delay or hindrance to the other.

Each contractor shall be responsible to the other for all damage to work, to persons or property caused to the other by their operations, and for loss caused the other due to unnecessary delays or failure to finish the work within the time specified for completion.

-A list of ongoing contracts within the Project limits includes but is not limited to:

Section 3 Public Information

Section 3.2.5.1.4 "Commercial Vehicle Access and Restriction Information" is modified as indicated below:

3.2.5.1.4 Commercial Vehicle Access and Restriction Information

A written schedule shall be submitted not less than twenty five (25) Calendar Days and not more than 125 Calendar Days prior to an activity taking place that may restrict or impede the movement of commercial vehicles due to reduced lane widths, reduced height clearances, or lower weight limits, the Design-Builder shall provide to the Department's ~~Construction~~ Contract Manager, California Highway Patrol, Department's Office of Truck Services (Transportation Permits), and Department's Project Manager with notice including:

- Description of the event
- The start of the event
- The end of the event

Section 4 Environmental Compliance

Section 4.2.1 "Standards" is modified as indicated below:

4.2.1 Standards

The Design Builder shall perform work in accordance with the relevant requirements of the standards listed by priority below.

If there is any conflict in standards, adhere to the standard with the highest priority. However, if the Design-Builder's Submittal has a higher standard than any of the listed standards, adhere to the Submittal Proposal standard.

If there is any unresolved ambiguity in standards, it is the Design-Builder's responsibility to obtain clarification from the Department before proceeding with design and/or construction. Use the most current version of each listed standard as of the Request for Proposals (RFP) issue date unless specified herein or modified by Addendum or Change Order.

Environmental Standards and Requirements ~~Priority Agency Title~~

Priority	Agency	Title
1	Caltrans	Exhibit 4-~~-~~C~~A~~, Environmental Commitment Record (ECR)~~MND/*FONSI*~~
~~2~~	~~Caltrans~~	~~Environmental Commitment Record~~
2~~3~~	Caltrans	Exhibit 4-B, Department-Obtained Permits, Agreements and/orApprovals
3	Caltrans	Exhibit 4-A, MND/FONSI
4	Caltrans	Standard Environmental Reference
5	Caltrans	Special Provisions
~~5~~6	Caltrans	Standard Plans May 2006
~~6~~7	Caltrans	Design Build Modifications to the Standard Specifications

~~7~~8	Caltrans	Standard Specifications May 2006
~~8~~9	Caltrans	Construction Site Best Management Practices (BMPs) Manual
~~9~~10	Caltrans	Storm Water Pollution Prevention Plan (SWPPP) and Water Pollution Control Program (WPCP) Preparation Manual
~~10~~11	Various	Technical Memoranda
~~11~~12	RWQCB	SUSMP Requirements
~~12~~13	Caltrans	Volume II, CT Environmental Handbook; Cultural Resources
~~13~~14	Caltrans	Volume III, CT Environmental Handbook; Biological Resources
~~14~~15	Caltrans	Volume IV, CT Environmental Handbook, Community Impact

Section 4.2.2 "Permits" is modified as indicated below:

4.2.2 Permits

Permits provided by the Department that must be amended or renewed as a result of the Design-Builder's Work or due to lapse in time shall be the responsibility of both the Department and the Design Builder. ~~Table 4-1 should be amended accordingly.~~

The Design-Builder shall comply with the requirements of all permits.

Table 4-1: Project Environmental Permit, Agreement, and/or Approval Responsibilities							
REQUIRED PERMITS, AGREEMENTS, & Approvals	**N/A**	**COORDINATE**	**PREPARE APPLICATION**	**OBTAIN**	**IMPLEMENT**	**RENEW**	**AMEND**
404 USACOE		CT	CT	CT	CT/DB	CT/DB	CT/DB
401 RWQCB		CT	CT	CT	CT/DB	CT/DB	CT/DB
NPDES SWRCB							
State Waste Discharge Requirements (Porter Cologne) RWQCB							
FESA Section 7 USFWS		**CT**		**CT**		**CT**	**CT**
Coastal Development Permit		CT	CT	CT	DB	CT	CT
~~BCDC Permit~~							
1602 CDFG		CT	CT	CT	CT/DB	CT/DB	CT/DB
~~Air Quality Permits~~							
Other (specify)							

Should the Design Builder's design necessitate a modification of permits obtained, it is the Department responsibility to obtain all necessary agency approvals for permit modifications. Modifications of permits previously obtained shall be subject approval prior to submission to the agency responsible for the permit approval.

Section 4.4.1 "Mitigation Measures" is modified as indicated below:

4.4.1 Mitigation Measures

The mitigation measures cover all areas of environmental concern impacted by the Project, with a detailed list of actions required and assignment of responsibility for each action. The list shall include environmental requirements, including watershed and local government consent conditions, permit conditions, and include recognition of Project-specific issues, procedural steps for mitigation, and particular actions planned to comply with the governing regulations.

The Design Builder shall be responsible for maintaining mitigation measures during the life of the Project to minimize potential environmental impacts. Design Builder shall ensure the Project design is in compliance with all applicable Governmental Rules and shall prepare plans and procedures to assure and document compliance, where required.

The Design Builder is responsible for the protection of Environmentally Sensitive Areas (ESAs), notwithstanding the oversight role of the Department. The Project may be subject to inspections from the California Department of Fish and Game (CDFG), United States Fish and Wildlife Service (USFWS), United States Army Corps of Engineers, Regional Water Quality Control Board (RWQCB), and the Department.

The Design Builder shall follow the terms and conditions of the Environmental Commitment~~Comments~~ Record (ECR) and all permit(s) pertaining to requirements for the protection or mitigation of impacts on ESAs.

ESAs include cultural and biological resources as defined in the FED, as well as those discovered during the preconstruction survey(s) process. No construction activity shall affect the ESAs without approval of the appropriate permitting agency and the Department.

Identified ESAs are to be included in the Environmental Commitment Record and is to be shown on the project plans. Protection of the ESA shall be facilitated by identification of the Site location using fencing, as appropriate.

Environmental training of all construction workers shall include the importance of ESA protection, visual recognition through fencing, and potential project and personal liabilities resulting from ESA damage/impact. Design Builder shall assure inspection of the ESA in accordance with the ECR and immediately report any damage/impact to the Department.

Section 4.4.1.2 "Contaminated Materials" is modified as indicated below:

4.4.1.2. Contaminated Materials

Asbestos Containing Material (ACM) and Regulated Waste

All Asbestos-related work shall be performed by a properly licensed Asbestos Abatement Design Builder or subcontractor, certified by the Contractors State License Board (CSLB) and registered with the Department of Industrial Relations, Division of Occupational Safety and Health Cal/OSHA. Lead abatement work, if required, shall only be performed by a person certified by the Department of Health Services. All work shall be done in accordance with all Federal, State, and Local regulations..

Asbestos in Bridge Structures

Asbestos was found in all five of the bridges sampled within the project limits. Information can be found in "Limited Asbestos Survey Report" by Kleinfelder dated June 23, 2009.

The Design Builder shall provide complete assessments, oversight, and abatement of asbestos-containing materials, and complete removal of regulated wastes prior to demolition. The Design Builder shall provide notification a minimum of twenty-four (24) hours prior to starting work and twenty-four (24) hours prior to completion of all work.

~~Payment for asbestos and lead containing materials generated from demolition shall be based on quantities and unit prices in Table 1 attached herein.~~

The Design Builder shall abate all hazardous materials to include but not limited to friable and anon-friable asbestos and lead paint, according to all environmental laws and regulations, and provide any necessary Storm Water Pollution Prevention Plan (SWPPP) or Water Pollution Control Program (WPCP) and implementation of such Plan(s).

Prior to starting demolition operations, the Design Builder shall be responsible to ensure utility companies have disconnected and removed meters, service lines, LP tank or natural gas tank.

The Design Builder shall procure all necessary permits and pay all fees related to ACM and Regulated Waste.

NESHAP Asbestos Notification shall be required 14 calendar days prior to start of any demolition if structures will be disturbed during construction. The appropriate special provisions for testing of areas suspected to contain ACM and for handling and disposal of ACM shall be provided for review and approval. The Design Builder shall have access to the "Limited Asbestos Survey Report" by Kleinfelder dated June 23, 2009, and have the appropriate SSP's that describes the results of the assessment and of the abatement and removal activities.

In the event that additional waste materials suspected of containing asbestos or other regulated materials are encountered during construction activities, the Design Builder shall immediately stop work and provide notification. The Design Builder will perform all work necessary to assess, abate, and remove any asbestos or other regulated materials.

~~Payment for asbestos and lead containing materials generated from construction activities shall be based on quantities and unit prices in Table 2 attached herein.~~

Health and Safety Plan

Hazardous Materials may exist on the surface, subsurface, groundwater, or on structures to be demolished, and may be mixed with soil, water, and/or other waste materials.

The Design Builder shall prepare a Hazardous Waste Operations Safety and Health Program for Hazardous Waste Operations, following Federal, State of California and local requirements

including CAL/OSHA, CCR Title 8, 5192 et seq., and Federal OSHA, 29 CFR 1910 et seq, and 1926 et seq. A Certified Industrial Hygienist licensed by American Board of Industrial Hygiene shall approve the Hazardous Waste Operations Safety and Health Program.

The Design Builder shall submit a site specific Health and Safety Plan (HASP) as Part of the Hazardous Waste Operations Safety and Health Program, and as defined in CCR Title 8, 5192(1)(B), within thirty (30) days of receiving Notice to Proceed.

The Design Builder shall distribute the HASP to all employees that could be potentially exposed to Hazardous Materials. Employees shall be required to read the HASP, sign a compliance agreement, and abide by all provisions. The HASP shall be displayed or made available on the Project at all times. The Design Builder shall develop and maintain on site all industrial hygiene information, including "right-to-know" information. It is anticipated and considered as part of the Scope of Work that the Design-Builder will perform Hazardous Waste Operations requiring protective gear up to and including Level C. The Design-Builder shall provide Personal Protective Equipment (PPE) and monitoring equipment to conform to the requirements set forth by CAL/OSHA and Federal/OSHA.

In the event that the Design-Builder encounters or has reason to believe it has encountered Hazardous Materials requiring Hazardous Waste Operations on the Project, the Design-Builder shall provide verbal notification and proceed with the Hazardous Waste Operations work.

The Design-Builder shall then provide written notification by implementing a mitigation plan. If the finding of Hazardous Substances precludes the continuation of work in that work area, the Design-Builder shall continue Working in areas not affected thereby.

The Design Builder shall maintain documentation and provide information, as requested, regarding potential or actual exposure to the public.

The Design Builder shall maintain records of all related incidents and provide notification immediately.

The Design Builder shall be responsible for management of the Hazardous Materials and Hazardous Waste encountered on the Project.

Removal, Handling, and Transportation of Hazardous Materials

The Design Builder shall be responsible for the removal, handling, transportation and disposal, if any, of Hazardous Materials, including but not limited to asbestos, yellow striping, lead paint, and ADL contaminated soil resulting from the Project. Design Builder shall be responsible for filing any information regarding the discovery, handling, removal, transportation and disposal of Hazardous Materials related to this Project with the appropriate Federal, State or local regulatory agencies. Such information includes investigation reports, health and safety plans, transportation and waste tracking documentation, field-testing results and reports, NPDES Permit and DTSC variance records and correspondence, regulatory notifications, and any hazardous waste or contaminated material correspondence. All draft documents for the regulatory agencies are to be provided for review and concurrence.

The Design Builder shall be responsible for obtaining the Environmental Protection Agency Identification (EPA ID) number from DTSC no later than seven (7) calendar days in advance of the excavation and or removal of any Hazardous Material, Hazardous Waste, or contaminated material. The following information shall be required:

• Type of material (physical characteristics)

• Volume (cubic yards or gallons)

• Site address (at a minimum, route, post miles, and cross streets)

• Zip Code (mandatory for tracking purposes)

• Test results or waste profile

Once an EPA ID number has been obtained, the material shall be manifested by a transporter that possesses the credentials required under Title 22 (§66263) of the CCR. Design Builder shall submit copies of the manifests signed by the disposal facility to DTSC.

Bills of lading are needed for tracking and transporting ADL-affected soils to reuse sites. Copies of the bills of lading are to be attached to As-Builts prepared for the Project. After notification in writing, the qualification of ADL material for reuse will be verified.

The Design Builder shall have means for conducting emergency Hazardous Materials Management (i.e., tank removal, lead abatement, asbestos abatement, spills, etc.). The Design Builder shall ~~-~~immediately notify the Department of such conditions.

Removal and Disposal of Yellow Thermoplastic and Paint

Yellow striping removal poses a hazardous waste concern whether the striping is ground off alone or ground off with pavement. The Design Builder shall provide a Lead Compliance Plan (LCP) and shall be submitted for comments and approval at least two (2) weeks before fieldwork begins. Testing on removed material must be conducted for classification purposes. The Design Builder shall remove and dispose of yellow striping per Caltrans Special Provisions.

~~Payment for asbestos and lead containing materials generated from construction activities shall be based on quantities and unit prices in Table 2 attached herein.~~

Soil and Groundwater - General

The Design Builder shall review all Phase I and Phase II Environmental Site Assessment (ESA) reports completed for the Project. The Design Builder shall be responsible for updating the Phase I ESA if the Department or the Design Builder determines the Phase I ESA is inadequate in its coverage of the Project area. The Design Builder shall be responsible for additional drilling investigation and/or Phase II work that may be needed to accommodate the work.

The Design Builder shall sample and test the soils and groundwater that are suspected to be contaminated. The Design Builder shall also monitor soil excavation activities and evaluate planned treatment procedures. When all contaminated soil excavation and corrective action, and all groundwater dewatering has been completed for the Project, the Design Builder shall prepare a Corrective Action Implementation Report for the entire Project. The report shall be completed in accordance with applicable California Pollution Control Program requirements. The Design Builder shall install wheel/undercarriage washing equipment, or a functional equivalent, at excavation locations, as the first method by which to ensure that haul trucks have clean wheels and undercarriages before entering the roadway.

Contaminated Soil Contingency Plan

In the event on-site observations indicate contaminated materials (such as solid waste including demolition debris, containers or free product) or contaminated soil (based on organic vapor detector readings above background, visual staining or olfactory evidence) have been encountered in the Project area, the Design Builder shall be responsible for notifying and for filing any information with the appropriate Federal, State or local regulatory agencies.

No excavation of contaminated materials or soil shall take place without Approval.

The Design Builder shall stockpile all contaminated material or soil encountered within excavation limits as described in these provisions. To expedite the bridge substructure construction, the Design Builder may haul and temporarily stockpile all excavation materials from the bridge substructure construction to the temporary stockpiles sites designated near the Project site as approved by the Department.

The Design Builder may determine that some or all of the contaminated soil and all of the contaminated materials must be disposed at a California-permitted municipal solid waste (MSW) landfill facility or industrial landfill facility. The Design Builder shall select the California permitted MSW landfill facility or industrial landfill facility for disposal of the contaminated soils and materials.

The Design Builder shall be responsible for providing all required information to the landfill (typically waste profile information and soil analytical data) in order to obtain landfill acceptance of the contaminated soil for disposal or for use as daily cover as dictated by landfill acceptance criteria.

The Design Builder shall provide access to in-place and/or stockpiled soil to collect and analyze any additional samples required by the landfill.

The Design Builder shall provide the landfill-required waste profile form(s) for review and signature.

Contaminated material shall not be hauled to the landfill facility until the Design Builder has written approval from the landfill accepting the contaminated material for disposal at the landfill facility.

The Design Builder shall provide copies of shipping papers/manifests and landfill scale tickets daily while material is being hauled to the landfill.

Temporary Stockpile of Contaminated Soil

The stockpile shall be placed at a location near the Project as approved by the Department. The Design Builder shall stockpile the contaminated soil on minimum 10-mil plastic, and cover the stockpile with minimum 10-mil reinforced plastic. Fencing shall surround the stockpile. The stockpile cover shall be securely anchored. The Design Builder shall be responsible for the maintenance of the stockpile cover until all contaminated material is removed. The Design Builder shall inspect the stockpile a minimum of once per week. The Design Builder shall keep records of the weekly stockpile inspection, recording at minimum, the date and time inspected, and the stockpile coverage pre and post-inspection. Contaminated soil from different locations that may contain different contaminants shall be placed and maintained in separate stockpiles.

Contaminated Groundwater Contingency Plan

It is not known if any groundwater within the Project limits is contaminated. Because of the potential for contaminated properties with known or potential PAH, volatile organic compound (VOC), and petroleum-impacted groundwater located in the Project area, all groundwater dewatering necessary to complete the Project must be done under the assumption that the dewatered groundwater is contaminated. The Design Builder is responsible for obtaining the necessary Dewatering Permit. The Design Builder shall provide notification no less than five (5) days prior to beginning any Project dewatering. The Design Builder shall account for the treatment of contaminated groundwater in the Design Builder's Project schedule where construction work will disturb these areas. The Design Builder shall minimize Project dewatering to the greatest extent possible.

The Design Builder shall adhere to the General Waste Discharge Requirements for Discharges from Groundwater Extraction and Similar Discharges to Surface Water Within the San Diego Region Except for San Diego Bay, Order No. R9-2008-0002, NPDES No. CAG919002 (Dewatering Permit). The Dewatering Permit is to be obtained when groundwater is discharged into surface waters.

For all Project dewatering, the requirements of the Dewatering Permit and Construction General Permit (CGP) shall be used. The Design Builder shall provide access to all active discharge points.

Ground Water Quality

If the Design Builder chooses to dewater during construction at any location along the project, ground water samples shall be collected and analyzed for contaminants of concern by the Design Builder in accordance with the Dewatering Permit. The Design Builder shall submit a dewatering work plan for approval.

Aerially Deposited Lead

Aerially deposited lead is lead deposited within unpaved areas or formerly unpaved areas, primarily due to vehicle emissions. ADL is typically found within the top three (3) feet of material in unpaved areas within the highway ROW. ADL is present within the planned ROW limits as indicated in the following reports:

1. Aerially Deposited Lead Study Report -by Kleinfelder -dated January 29, 2009

This report was prepared for the I-805 and represents the sampling taken along I-805 between State Route 52 and the I-5/I-805 merge. For a description of the lead concentrations in the soil refer to Table 2; Summary of 95% UCL's. .

If less than a foot of soil will be removed for the construction of the project then SSP 19-900 shall be used and the soil will be considered type Y1 and the variance will be invoked. If Greater than 1 foot of soil is to be removed for the construction then the soil is considered type X which is non-hazardous, the SSP 15-027 shall be used and the soil can be removed from the site without any restrictions.

If the variance is invoked, the Design Builder shall comply with the Department of Toxic Substances Control's Variance in handling ADL material in the case of Type Y1 and recognizing the purpose of 'SB14 Hazardous Waste Source Reduction', the Design Builder shall reuse all the

ADL contaminated soils that meet the Variance criteria. The Design Builder shall survey the locations where ADL soil is reused according to the DTSC Variance. These locations shall be shown on the as-built plans and the coordinates shall be provided.

If the variance is invoked, the Design Builder shall prepare special provisions identifying the limits, extent of ADL, and handling of ADL in accordance with the Variance for each design submittal. The Design Builder shall prepare an LCP and an Excavation and Transportation Plan (ETP). The LCP and ETP shall be submitted for review and approval 2 weeks prior to excavation activities.

The LCP shall prevent or minimize worker exposure to lead while handling material containing ADL. It shall include perimeter air monitoring incorporating upwind and downwind locations. Daily monitoring shall take place, under the direction of a Certified Industrial Hygienist, while the Design Builder clears, grubs and performs earthwork operations.

If the variance is invoked, the ETP shall include an excavation schedule, temporary locations of stockpiled material, appropriate plastic sheeting to cover the stockpiles, locations of samples and laboratory results, dust control measures, the proposed site for disposal of the hazardous waste and a spill contingency plan for ADL soil.

Excavation, transportation, reuse and disposal of material containing ADL shall be in conformance with the variance and all environmental laws.

If the variance is invoked and the Design Builder has completed the permanent placement of material containing aerially deposited lead in conformance with the requirements of the Contract Documents, the Design Builder shall have no further responsibility for such materials in place. The Design Builder will not be considered a generator of such contaminated materials, except as expressly provided in the Contract. Further cleanup, removal or remedial actions for such materials will not be required if handled or disposed of as specified herein.

Section 4.5.2 “Environmental Documents” is modified as indicated below:

4.5.2 Environmental Documents

The Design Builder shall submit the following documents and must receive Approval prior to construction:

- Storm Water Pollution Prevention Plan and amendments, as required, to reflect Project development and staging
- Completed permit applications and permits as issued
- Environmental Notification Contact List

The Design Builder shall submit the following documents for approval.

Asbestos and Regulated Waste

- Asbestos and Regulated Materials Assessment Report – Shall be submitted for Approval.

- Asbestos and Regulated Materials Abatement and Removal Report – Draft shall be submitted for Approval. The final report of the results of abatement and removal activities shall be submitted no later than 30 Days after all abatement/removal actions are complete.

Contaminated Materials

- Investigation Work Plan – Shall be submitted for Approval.
- Contaminated Soil Cleanup Plan – Shall be submitted for Approval.
- Contaminated Soil Documentation Report – Shall be submitted for Acceptance.
- Non-petroleum Contaminated Soil Voluntary Investigation and Cleanup (VIC) applications – Shall be submitted for Approval and signature.
- Non-Petroleum Contaminated Soil Response Action Plan – The draft Response Action Plan(s) shall be submitted for Approval. The Design Builder shall submit a draft Response Action Implementation Report for Approval no later than 40 Days after the cleanup actions are completed at each VIC site. If requested, the Design Builder shall meet with the Department to review the draft and final Response Action Implementation Report(s). After receiving the Department approval of the final Response Action Implementation Report(s), the Design Builder shall submit the Response Action Implementation Report(s) to the MPCA VIC program for approval.
- Health and Safety Plan - Shall be submitted for approval.
- Lead Compliance Plan - Shall be submitted for approval.
- Evacuation and Transportation Plan - Shall be submitted for approval.

Groundwater

- Groundwater Discharge Report – Shall be submitted weekly.
- Contaminated Groundwater Dewatering Plan – Shall be submitted for approval.
- Contaminated Groundwater Documentation Report – Shall be submitted for Acceptance no later than 60 Days after all contaminated groundwater-dewatering actions are complete.
- Correspondence file
- All final reports for environmental work

Add Exhibit 4-C "Environmental Commitment Record (ECR)" attached to this addendum.

Section 6 Utilities

Section 6.2.1 "Responsibility" is modified as indicated below:

6.2.1 Responsibility

Design-Builder shall take all actions necessary to identify and confirm the existence and exact location, size and type of all utility facilities within the limits of the Project, including all potentially impacted service lines and service laterals. Design-Builder shall provide to the Department the Verification Maps with all known utility information plotted.

The Department will coordinate with utility owners to obtain Utility Verification information for the entire project limits and forward all the data collected to the Design-Builder.

Design-Builder shall plot all utility data onto the project plans and identify all potential utility conflicts according to the Department's ~~Design and~~ Encroachment Permit Manual~~Policy~~ (Chapter~~Section~~ 600 Utilities Permits)~~of Encroachment Manual)~~.

Design-Builder shall provide the Department the conflict maps for each Utility facility in conflict.

The Department shall contact the owners of the Public Utility facilities and request the required Relocation Plan. In the event that the owner cannot perform the design of the Relocation Plan, the Department may request the Design-Builder to perform this activity under a specific Work Order.

Design-Builder shall review the Relocation Plan and certify to the Department in writing that the Relocation Plan resolves the conflict and meets the construction schedule.

If the Relocation Plan is approved by the Design-Builder and the Department, the Department shall determine the cost liability and issue a Notice to Owner to require the owner to perform the physical relocation. In case the Relocation Plan is not approved by the Design-Builder, the Design-Builder shall provide detailed reason, and the Department shall request the owner to revise its plan accordingly.

At the Utility Owner's request, the Department may request the Design-Builder to perform part or all of the physical relocation work. This request would be in writing under a specific Work Order.

A copy of the Notice to Owner shall be forwarded to the Design-Builder. The Design-Builder shall make arrangements with the Utility Owner to schedule the relocation and monitor the physical relocation to ensure the work has been performed as proposed in the Notice to Owner.

Section 6.2.2.1 "Utilities Identified at the Time of the RFP" is modified as indicated below:

6.2.2.1 Utilities Identified at the Time of the RFP

~~The Department has issued Notices and Orders to all Utility Owners f~~For all identified Utilities that will~~may~~ be impacted by the Project, the Department will issue Notice to Owners. ~~There may be Utility Owners that have affected Utilities but that have not entered into a MUA by the Proposal Due Date.~~ The Design-Builder is responsible for all coordination activities with Utility Owners ~~that have not entered into a MUA by the Proposal Due Date~~. The Design-Builder shall contact all such Utility Owners to ascertain the location of all existing utilities, if any, before performing excavation operations. The Design-Builder shall conduct operations in the vicinity of existing Utilities in a manner that will prevent damage to any Utility.

The Design-Builder is responsible for locating and verifying all existing utility facilities within the project limits.

The Design-Builder shall mark the proposed excavation area before contacting Underground Service Alert. The Design-Builder shall call Underground Service Alert at least 48 hours (excluding Saturdays, Sundays, and holidays) before starting excavation operations.

The Design-Builder shall coordinate Work with Utility Owners so that Utility Work may progress in a reasonable manner, duplication of work may be reduced to a minimum, and services rendered by Utility Owners will not be unnecessarily interrupted.

When the Design-Builder works near electrical power lines, the Design-Builder shall work with the lines energized if the Work can be done safely in compliance with the Cal OSHA Regulations or make arrangements with San Diego Gas & Electric~~the power company, at Design-Builder's sole expense,~~ to

- temporarily shut off the power,
- temporarily insulate the line(s),
- bypass the power from the work area, or
- make other arrangements necessary for a safe work place.

For bridge and median work at Rose Canyon Bridge Overhead (Br No. 57-0706) there are two electrical overheads beneath the structure (north and south extremities). Work must be coordinated and in compliance with San Diego Gas & Electric, OSHA Regulations, Railroads and in conjunction with the following power outage windows and San Diego Gas & Electric requirements:

- Allowable long period outages intermittently between October 1 and May 15. Only one overhead outage at a time will be permitted. A minimum of 30 days advance notification is required. The cost for outages during this period will be paid for by the Department.

- Allowable daily outages between May 16 and September 30. Only one overhead outage at a time will be permitted. A minimum of 10 days advance notification is required. The cost for outages during this period will be paid for by the Design-Builder. The Department will withhold this cost from any amounts due to the Design-Builder~~Contractor~~.

- Contact San Diego Gas & Electric Transmission Construction & Maintenance Supervisor John Hota (Phone 858-541-5952) or Construction Supervisor Curtis Fitzgerald (Phone 858-541-5066) for outage coordination availability. If unavailable, contact San Diego Gas & Electric Construction Supervisor Clayton Tong (phone 858-650-4041). Once contact is made, outage coordination will be submitted to San Diego Gas & Electric Grid Operations Department based on the Design-Builders construction schedule(s).

- Protect existing power lines that are both energized and de-energized.

- Under emergency situations, San Diego Gas & Electric will provide a 2 hour notification to the Design-Builder that the lines need to be re-energized. The Design-Builder will clear all work areas in close proximity to de-energized lines.

The Department makes no warranty, guarantee, promise, or representation as to whether the Utility Owner will temporarily shut off power, insulate its line(s), or charge the Design-Builder a fee for preparing a safe work area for the Design-Builder.

The Design-Builder shall not start construction operations adjacent to energized utility facility until arrangements that are satisfactory to the Utility Owner have been made by the Design-Builder for the protection of the Utility and continuation of its service. Should the Design-Builder's equipment come in contact with or damage a Utility in any way, even though there may be no apparent evidence of breakage or harm, the Design-Builder shall promptly notify the proper authorities and cooperate with those authorities in determining damage and restoring interrupted services if needed. Where contact is made with a Utility, the Design-Builder shall suspend operations immediately and vacate the area until it has been determined by the Utility Owner that it is safe to resume operations.

The Design-Builder shall employ special equipment, construction methods, and hand labor, if necessary, to accomplish the planned Work adjacent to Utilities without damaging them. At no time shall the Design-Builder interfere with persons engaged in protecting or moving Utility property or in operating the Utility.

Section 6.2.3.2 "Scheduling (Work Windows)" is added as indicated below:

6.2.3.2 Scheduling (Work Windows)

~~The UISs indicate t~~The Design-Builder is to determine the estimated amount of time required for the Utility Owners to design and/or construct their Utility Work where applicable. ~~The foregoing time frames, and any time frames for design, construction, and/or performance of other tasks or reviews stated in the MUA, shall be considered estimates only and may not be relied upon by the Design-Builder for any purpose.~~ After utilities requiring relocation have been determined, a work window table should be prepared and submitted to the Department and Utility Owners for concurrence. The table should be comprised of locations of impacted utilities (by station), work description, site preparation by the Design-Builder and total working days.

The Design-Builder's attention is directed to the possibility of multiple relocation move-ins which will require coordination between various Utility Owners. Only on Utility Owner at a time can be notified to work in a specific area in a given time. However, on occasion, work overlap at a specific location for different Utility Owners may be permitted with coordination between the Utility Owners through the Department.

Section 6.3.3 "Verification" is added as indicated below:

6.3.3 Verification

The Design-Builder shall take all actions necessary to identify and confirm the existence and exact location, size, and type of all Utility facilities within the R/W or otherwise potentially impacted by the Project construction, whether or not such Utilities are shown in the Utility Information Sheets~~Plan sheets~~, and the Pothole Plan Sheets~~Tables showing Potholing Information if applicable~~.

This shall include all potentially impacted Service Lines. Such actions shall include making diligent inquiry at the offices of the Utility Owners, consulting public records, and conducting field studies (such as potholing), taking into consideration the possibility that Utility Owners may provide inaccurate or inexact information with regard to their facilities. The Design-Builder shall notify the Department~~R/W Acquisition~~ of any service connection that is impacted.

The Design-Builder shall prepare a Conflict Map for each Utility impacted by the Project, identifying the location of the existing Utility and the nature of the conflict. The information shown on the Conflict Map sheets shall include the following:

- Existing and proposed R/W;
- Existing topography;
- Proposed Project elements;
- Existing Utilities

Section 6.4.7 "Damage to Utilities by Design-Builder" is modified as indicated below:

6.4.5~~7~~ Damage to Utilities by Design-Builder

In performing the Work, the Design-Builder shall require its Subcontractors, employees, and agents to exercise due precaution and care to avoid causing damage to the Utility Owner's facilities, persons, and property. The Design-Builder shall be responsible for any and all damage caused by the Design-Builder's Subcontractors, employees or agents to the property, facilities, structures, or persons of the Utility Owner. The Design-Builder shall immediately notify the affected Utility Owners of any Utilities damaged by the Design-Builder during the Design-Builder's performance of the Work. The Design-Builder shall be responsible for all costs and/or schedule impact associated with said damage.

Promptly after the Design-Builder's discovery of such damage or the Design-Builder's receipt of notice of any such damage from the Utility Owner or from any other source: (a) the Design-Builder shall repair the damage to the Utility Owner's satisfaction, or (b) at the Utility Owner's election, the Utility Owner may make such repairs at the Design-Builder's expense. If the Design-Builder fails to make any required payment to a Utility Owner 60 Days after receiving the Utility Owner's invoice, the Department may make such payment if required ~~pursuant to the applicable MUA or otherwise~~ at the Department's sole discretion. If the Design-Builder's failure to pay is due to a reasonable dispute, then the Department may not make such payment until at least 60 Days after the final resolution of such dispute has occurred without payment by the Design-Builder. If the Department makes any payment, the Design-Builder shall reimburse the Department for such payment within 10 Days after receipt of the Department's invoice, or, in the Department's discretion, the Department may deduct the amount of reimbursement due from the next payment (or payments, if necessary) due to Design-Builder under the Contract.

Section 6.5 "Deliverables" is modified as indicated below:

6.5 Deliverables

Deliverables shall be submitted to the Department in hard copy and electronic versions.

- ~~Exhibit 6-A, MUA: The Design-Builder shall sign four originals and return all to the Department.~~

~~Exhibit 6-B, Department Utility Permit Application: The Design-Builder shall submit one original with seven sketches to the Department for Approval on all Utilities that are designed by the Design-Builder. Submittal shall be within two Days of the Design-~~

~~Builder's receipt of the Utility's Design Approval Letter. The Department will respond within 60 Working Days of receipt.~~

~~Exhibit 6-C, Utility Tracking Report (blank form): One information copy of the Utility Tracking Report shall be submitted to the Department weekly or as otherwise directed by the Department. A preliminary Utility Tracking Report shall be submitted to the Department for Acceptance prior to NTP 2.~~

~~Utility Design Sheet (UDS): The Design-Builder shall submit a copy to the Department and the Utility two Days before the initial Work Order meeting.~~

~~Work Order: Design-Builder shall submit three originals of the Work Order (including any exhibits) to the Department for Approval upon execution by the Utility and Design-Builder. The Department will respond with comments within 10 Working Days of receipt.~~

~~Design approval letters: The Design-Builder shall submit a copy of each design approval letter to the Department as an exhibit to each Work Order.~~

~~The Design-Builder shall submit a construction inspection approval letter to the Department within seven Days of Utility Work completion for each Utility Work Order.~~

~~The Design-Builder shall submit a construction inspection approval letter to the Department within seven Days of Utility Work completion for each segment of work accomplished by a Utility Owner.~~

- Utility Tracking Report (Blank Form provided as Exhibit 6-C). One information copy of the Utility Tracking Report shall be submitted to the Department weekly or as otherwise directed by the Department. A preliminary Utility Tracking Report shall be submitted to the Department for Acceptance prior to NTP2.
- Utility Design Sheets (UDS). The Design-Builder shall submit a copy to the Department and the Utility Owner two days before the initial Work Order meeting.
- Work Order. Design Builder shall submit three originals of the Work Order (including any exhibits) to the Department for Approval upon execution by the Utility Owner and Design-Builder. The Department will respond with comments within 10 Working Days of receipt.
- Design approval letters. The Design-Builder shall submit a copy of each design approval letter to the Department as an exhibit to each Work Order.
- The Design-Builder shall submit a construction inspection approval letter to the Department within seven Days of Utility Work completion for each Utility Work Order.

"Exhibits" is modified as indicated below:

Exhibit 6-A	~~Master Utility Agreement~~	Reserved
~~Exhibit 6-B~~	~~Department Utility Permit~~	Reserved
Exhibit 6-C	~~Utility~~ Utilities Tracking Report	
Exhibit 6-D	Existing Utility Information	

Replace Exhibit 6-C with the "Utilities Tracking Report" attached to this addendum.

Section 7 Right of Way

Section 7.2.3 "Structure Plan Submittals" is modified as indicated below:

7.2.3 Software Requirements

The Design-Builder shall prepare all electronic drawings in MicroStation Version 8 and supporting electronic data in CaiCE Version 10SP8 with conversion to .pdf available. All reports and documents shall be prepared in Microsoft Word format.

Section 7.3.3 "Identification of Additional R/W" is modified as indicated below:

7.3.3 *Identification of Additional R/W*

If the Design-Builder determines that additional R/W is necessary or required as a result of a Design Change or Construction Change Order, the Design-Builder shall prepare and submit a written request to the Department for consideration. This request shall identify the additional R/W sought, along with a justification for its need, and shall include drawings depicting proposed construction limits and cross-sections. The Department will review the request and will determine whether the acquisition is reasonable, necessary and within the scope of the Environmental Document:

The Department will notify the Design-Builder in writing regarding the schedule and processes required to complete the acquisition. Depending on parcel complexity, the Department may require up to 16 calendar months from the date the right of way requirements are received from the Design-Builder to certify the parcel(s) for access. Schedule implications shall be incorporated into the Design-Builder's schedule and the Department shall not be responsible for any construction delays resulting from the acquisition and clearance of such Additional R/W. Access to the Additional R/W will not be allowed until the Department has notified the Design-Builder in writing that it is available for use.

A separate request to acquire Additional Property shall be prepared by the Design Builder for each property. The request shall include:

- A drawing depicting the additional acquisition needed. The drawing shall be tied to the project datum with sufficient information and accuracy necessary for mapping (e.g. stationing and offset or coordinates). The best available mapping shall be utilized for the drawing. The drawing shall be color coded to indicate the type of title needed (red for fee, green for easement)
- Name of owner
- Duration of need for property (permanent or length of temporary use);
- Any additional rights required (abutter's rights, the right to remove improvements, etc.)
- Type of property rights needed (fee, easement, etc.);

- Analysis regarding need to acquire the parcel (including analysis regarding alternatives to the acquisition);
- Value engineering analysis, if applicable; and
- Desired date for provision of access.

Department is responsible for obtaining any required California Transportation Commission (CTC) resolution, if necessary, due to the additional R/W acquisition.

Section 7.5.3 "Eminent Domain – Condemnation" is modified as indicated below:

7.5.3 Eminent Domain – Condemnation

Design-Builder shall provide support for eminent domain acquisition activities, if necessary, including but not limited to depositions, testifying in court, and preparation of exhibits.

It is anticipated that parcels acquired through Condemnation will take an additional nine (9) months after California Transportation Commission (CTC) resolution when the parcel does not require relocation. It is anticipated that parcels acquired through Condemnation will take an additional eighteen (18) months after California Transportation Commission (CTC) resolution when the parcel requires relocation.

Section 7.6 "Deliverables" is added as indicated below:

7.6 Deliverables

7.6.1 Acquisition Activities Deliverables Summary

For acquisition of additional R/W and/or construction easements, Department will provide a R/W authorization map for the Design Builder.

The Design Builder shall provide the following items related to Eminent Domain – Condemnation:

- All items necessary for the justification of the eminent domain actions
- Materials and exhibits for hearings or trails as required
- Expert witness for hearings or trials as required

For acquisition of additional R/W and/or construction easements, the Design Builder shall submit a written request to the Department.

Section 11 Roadways

Section 11.2.5 "Software" is modified as indicated below:

11.2.5 Software

The Design-Builder shall prepare all electronic drawings in MicroStation Version 8 ~~using~~ and supporting electronic data in CAiCE ~~by AutoDesk~~Version 10SP8 ~~on the same version in use by the Department on the date of the Final RFP~~.

The Design-Builder shall use AutoTurn by Transoft Solutions.

Section 13 Structures

Add Exhibit 13-B "Structural Performance Criteria of Carroll Canyon DAR BOH" attached to this addendum.

Section 14 Landscape

Section 14.2.5 "Software" is modified as indicated below:

14.2.5 Software

The Design-Builder shall prepare all electronic drawings in MicroStation Version 8 and supporting electronic data in CAiCE Version 10SP8 ~~The Design-Builder shall prepare drawings in MicroStation and CAiCE by AutoDesk on the same version the Department is using on the date of Final RFP.~~

Section 14.4.4 "Plant Establishment" is modified as indicated below:

14.4.4 Plant Establishment

The Design-Builder shall follow 'Plant Establishment' as defined in *Caltrans Standards Specifications* and Standard Special Provisions. Plant Establishment shall be Type 2 for a period of ~~250 working~~365 calendar days. Weeds within plant basins, native sod and groundcover areas shall be controlled by pulling. Weeds within mulch areas and outside of basins, sod and groundcover areas shall be controlled by killing. Weeds within pavement, curbs, sidewalks, textured paving, and other surfaced areas shall be controlled by killing. Additional plant establishment work required by the Environmental Document shall be accomplished by a separate Department contract.

Section 15 Visual Quality Management

Replace Exhibit 15-A "I-805 North Phase 1 Visual Quality Manual" with the attached revised Exhibit 15-A.

Section 24 Railroad

Section 24.9 "California Public Utilities Commission" is modified as indicated below:

24.9 California Public Utilities Commission

The Design-Builder shall be fully responsible for the coordination and the preparation of all deliverables to complete all appropriate applications with the California Public Utilities Commission (CPUC). The Department shall be responsible for the filing the applications, as required by the CPUC. As~~S~~ part of the application process, the Design-Builder shall be responsible for obtaining Letters of Concurrence from the users of the tracks, BNSF and Amtrak, before the formal application is submitted to the CPUC. Without Letters of Concurrence, the users could protest the formal application and cause delays in getting the application approved.

The authority to construct a new crossing is granted by an Order from the CPUC through a "formal application" process, which will result in a Decision signed by the Commission. The Design-Builder shall contact and work with the Commission's Rail Crossings Engineering Section prior to making any formal application for new crossing. CPUC staff will be able to advise and assist in assuring the application is complete and minimize the chances of other parties protesting the application, or it being rejected by the CPUC Docket Office. The Design-Builder must have ~~final approved project environmental document and preliminary structure plans~~100% plans showing all railroad impacts before a "formal application" can be filed and accepted by CPUC. The Design-Builder is cautioned the process with the CPUC and the execution of C&M Agreements with the railroad is very time extensive. This shall be fully taken into consideration in the project schedule and cost~~ and be acknowledged by all stakeholders~~.

REFERENCE INFORMATION DOCUMENTS (RID)

See revised RID Index for a list of provided Reference Information Documents in the Data Room.

FORM 9

PROPOSAL PRICE

Proposer Name: _____

Item/Line No.	Description	Unit	Item Total
PART A	**PROJECT MANAGEMENT**		
1	Contract Management	Lump Sum	$
2	Quality Management	Lump Sum	$
3	Safety Management	Lump Sum	$
4	Public Information Management	Lump Sum	$
5	Mobilization	Lump Sum	$
6	Time Related Overhead	Lump Sum	$
7	Bonds and Insurance (sum of 7a, 7b, and 7c).	Lump Sum	$
	7a Warranty Bond	$	
	7b Payment and Performance Bond	$	
	7c Insurance	$	
8	**Project Management Subtotal** *(Sum of Lines 1 through 7)*	**Lump Sum**	$
PART B	**ENGINEERING & CONSTRUCTION**		
9	Design Services	Lump Sum	$
10	Environmental Management	Lump Sum	$
11	Clearing and Grubbing	Lump Sum	$
12	Utilities	Lump Sum	$
13	Geotechnical	Lump Sum	$
14	Surveys	Lump Sum	$
15	Concrete Pavement	Lump Sum	$
16	Hot Mix Asphalt Pavement	Lump Sum	$
17	Grading and Roadways	Lump Sum	$
18	Drainage	Lump Sum	$
19	Bridges *(must equal summation of all Form 14s)*	Lump Sum	$
20	Retaining Walls	Lump Sum	$
21	Sound Walls	Lump Sum	$

22	Highway Planting and Irrigation	Lump Sum	$
23	Signing, Striping, Signals, Lighting	Lump Sum	$
24	ITS	Lump Sum	$
25	Maintenance of Traffic	Lump Sum	$
26	Maintenance During Construction	Lump Sum	$
27	Asphalt Price Index Fluctuation Allowance	Lump Sum	$200,000
28	Railroad Costs	Lump Sum	$
29	Final Acceptance	Lump Sum	$
30	**Engineering and Construction Subtotal** *(Sum of Lines 9 through 29)*	**Lump Sum**	$
31	**PROPOSAL PRICE (A+B)** (Sum of Lines 8 and 30)	**Lump Sum**	$

EXHIBIT 4-C

Environmental Commitment Record

This exhibit is provided as an electronic file.

Task and Brief Description	Ref.	Design/Builder Responsible for Compliance?	Caltrans Construction Responsible Branch / Staff	Timing / Phase	NSSP, SSP, Std Spec, Permit	Action Taken to Comply/Remarks	Construction Task Completed	
							Initial	Date
Design Kick-Off								
Environmental PS&E Review								
Preconstruction Meeting								
Transfer Resident Engineer Book								
Prejob Meeting								
Environmental Compliance Review								
PERMITS								
Section 7 Threatened and Endangered Species	BO	Yes	R.E., Constr. Liaison, Biology, Stewardship	PS&E, Pre-Const, Const, Post-Const		Comply with Biological Opinion Reference # FWS-SDG-09B0274-10F0485		
Section 404 Permit for filling or dredging waters of the United States.	404 Permit	Yes	R.E., Constr. Liaison, Biology, NPDES, Stewardship	PS&E, Pre-Const, Const, Post-Const				
1602 Agreement for Streambed Alteration	1602 Agreement	Yes	R.E., Constr. Liaison, Biology, NPDES, Stewardship	PS&E, Pre-Const, Const, Post-Const		Comply with Streambed Alteration Agreement Notification No 1600-2011-0179-R5		
Section 401 Water Quality Certification	401 Permit	Yes	R.E., Constr. Liaison, Biology, NPDES, Stewardship	PS&E, Pre-Const, Const, Post-Const				
Coastal Development Permit	CDP Permit	Yes	R.E., Constr. Liaison, Biology, Stewardship	PS&E, Pre-Const, Const, Post-Const		Comply with Coastal Development Permit # 631853		
AIR QUALITY								
Minimize land disturbance.		Yes	R.E., Constr. Liaison, Air					

Task and Brief Description	Ref.	Design/Builder Responsible for Compliance?	Caltrans Construction Responsible Branch / Staff	Timing / Phase	NSSP, SSP, Std Spec, Permit	Action Taken to Comply/Remarks	Construction Task Completed	
							Initial	Date
Use watering trucks to minimize dust; watering should be sufficient to confine dust plumes to the project work areas.		Yes	R.E., Constr. Liaison, Air					
Suspend grading and earth moving when wind gusts exceed 25 miles per hour unless the soil is wet enough to prevent dust plumes.		Yes	R.E., Constr. Liaison, Air					
Cover all trucks hauling dirt when traveling at speeds greater than 15 miles per hour.		Yes	R.E., Constr. Liaison, Air					
Stabilize the surface of dirt piles if not removed within 2 days.		Yes	R.E., Constr. Liaison, Air					
Limit vehicular paths on unpaved surfaces and stabilize any temporary roads.		Yes	R.E., Constr. Liaison, Air					
Minimize unnecessary vehicular and machinery activities.		Yes	R.E., Constr. Liaison, Air					
Sweep paved streets at least once per day where there is evidence of dirt that has been carried on to the roadway.		Yes	R.E., Constr. Liaison, Air					
Revegetate disturbed land, including vehicular paths created during construction to avoid future off-road vehicular activities.		Yes	R.E., Constr. Liaison, Air					
Remove unused material.		Yes	R.E., Constr. Liaison, Air					

Task and Brief Description	Ref.	Design/Builder Responsible for Compliance?	Caltrans Construction Responsible Branch / Staff	Timing / Phase	NSSP, SSP, Std Spec, Permit	Action Taken to Comply/Remarks	Construction Task Completed	
							Initial	Date
BIOLOGY								
Seeds from sensitive plant species removed during construction will be collected prior to brushing activities for use in revegetation efforts		Yes	R.E., Constr. Liaison, Biology					
All native or sensitive habitats outside the permanent and temporary construction limits should be designated as Environmentally Sensitive Areas (ESA) on project maps. Environmentally Sensitive Areas should be temporarily fenced during construction with orange plastic snow fence. No personnel, equipment, or debris will be allowed within the Environmentally Sensitive Areas.		Yes	R.E., Constr. Liaison, Biology					
All native vegetation and non-native shrubs and trees within the impact areas will be removed outside of the breeding season (February 15 to September 15) to avoid impacts to nesting birds. Otherwise, a qualified biologist will thoroughly survey all vegetation prior to removal during the breeding season to ensure there are no nesting birds onsite. If nesting birds are identified onsite, vegetation removal will be delayed until the nest no longer supports eggs or chicks.		Yes	R.E., Constr. Liaison, Biology					

Task and Brief Description	Ref.	Design/Builder Responsible for Compliance?	Caltrans Construction Responsible Branch / Staff	Timing / Phase	NSSP, SSP, Std Spec, Permit	Action Taken to Comply/Remarks	Construction Task Completed	
							Initial	Date
All pile driving near the creeks that support Federally and State listed bird species will be completed outside the bird breeding season (February 15 to September 15) to minimize construction noise impacts to sensitive riparian-nesting bird species.		Yes	R.E., Constr. Liaison, Biology					
Clearing and grubbing of native habitats will occur from September 1 to February 14 to avoid impacts to gnatcatchers.		Yes	R.E., Constr. Liaison, Biology					
An approved project biologist must be onsite during: intial clearing and grubbing, weekly during project construction within 500 feet of gnatcatcher habitat, vernal pool habitat, or navarretia critical habitat.		Yes	R.E., Constr. Liaison, Biology					
All debris from the expansion of bridges will be contained so that it does not fall into rivers and creeks.		Yes	R.E., Constr. Liaison, Biology					
An approved project biologist must be notified 30 days prior to clearing and grubbing to conduct surveys for gnatcatchers, one survey will be conducted the day immediately prior to the intitiation of work. The project biologist will direct construction personnel to begin clearing and grubbing in areas away from gnatcatchers. Caltrans must notify fish and wildlife 7 days prior to clearing and grubbing		Yes	R.E., Constr. Liaison, Biology					

Task and Brief Description	Ref.	Design/Builder Responsible for Compliance?	Caltrans Construction Responsible Branch / Staff	Timing / Phase	NSSP, SSP, Std Spec, Permit	Action Taken to Comply/Remarks	Construction Task Completed	
							Initial	Date
A project biologist must inspect ESA fencing and erosion control measures within or up-slope of native habitat areas once per week to ensure that any breaks in the fencing or erosion control measures are repaired immediately.		Yes	R.E., Constr. Liaison, Biology					
The project biologist may halt work if necessary to ensure proper implementation of species and habitat proection measures. Any violations to species and habitat protection measures must be submitted to fish and wildlife within 24 hours of occurance.		Yes	R.E., Constr. Liaison, Biology					
Wildlife fencing must be places around bridges to direct wildlife to the crossings, fencingp lans must be submitted to fish and wildlife 5 days prior to initiating project impacts.		Yes	R.E., Constr. Liaison, Biology					
Monthly email reports must be submitted to Caltrans and fish and wildlife during clearing of gnatcatcher habitiat and project construction.		Yes	R.E., Constr. Liaison, Biology					
A final report will be submitted with 120 days of project completion to fish and wildlife that documents that authorized impacts were not exceeded and that compliance with conservation measures included in the Biological Opinion were followed.		Yes	R.E., Constr. Liaison, Biology					

Task and Brief Description	Ref.	Design/Builder Responsible for Compliance?	Caltrans Construction Responsible Branch / Staff	Timing / Phase	NSSP, SSP, Std Spec, Permit	Action Taken to Comply/Remarks	Construction Task Completed	
							Initial	Date
All construction personnel must be trained on the biological resources associated with the construction work.		Yes	R.E., Constr. Liaison, Biology					
Special care will be taken when transporting, use, and disposing of soils containing invasive weed seeds. All heavy equipment will be washed and cleaned of debris prior to entering a new area, to minimize spread of invasive weeds.		Yes	R.E., Constr. Liaison, Biology					
A qualified biologist will be available for both the pre-construction and construction phases to review grading plans, address protection of special status biological resources, and monitor ongoing work. The biologist should be familiar with the habitats, plants, and wildlife of the Project area, and maintain communications with the resident engineer, to ensure that issues relating to biological resources are appropriately and lawfully managed.		Yes	R.E., Constr. Liaison, Biology					
Detention basins will be placed in many of the loop ramps, and bioswales will be placed on many of the slopes to treat runoff from the freeway.		Yes	R.E., Constr. Liaison, Biology					

Task and Brief Description	Ref.	Design/Builder Responsible for Compliance?	Caltrans Construction Responsible Branch / Staff	Timing / Phase	NSSP, SSP, Std Spec, Permit	Action Taken to Comply/Remarks	Construction Task Completed	
							Initial	Date
Appropriate best management practices (BMPs) will be used to control erosion and sedimentation. No sediment or debris will be allowed to enter the vernal pools, creeks, rivers, or other drainages.		Yes	R.E., Constr. Liaison, Biology					
Exclusion devices will be installed on bridge drain holes and ledges during the non-breeding season (September 1 through February 15) to prevent swallows, swifts, and any other birds or bats from nesting on or within bridges to be demolished or expanded.		Yes	R.E., Constr. Liaison, Biology					
Cut slopes will be revegetated with native upland habitats with similar composition to those within the Project study area. Fill slopes and areas adjacent to wetlands and drainages will be revegetated with appropriate native upland and wetland non-invasive species. The revegetated areas will have temporary irrigation and be planted with native container plants and seeds selected by the district biologist. There will be at least three years of plant establishment/maintenance on these slopes to control invasive weeds.		Yes	R.E., Constr. Liaison, Biology					

Task and Brief Description	Ref.	Design/Builder Responsible for Compliance?	Caltrans Construction Responsible Branch / Staff	Timing / Phase	NSSP, SSP, Std Spec, Permit	Action Taken to Comply/Remarks	Construction Task Completed	
							Initial	Date
Bioswales and detention basins will be planted with appropriate native species as determined by the biologist and storm water pollution prevention professional. Slopes adjacent to developed urban areas will be vegetated with native and drought tolerant non-invasive species selected by the biologist and landscape architect. Interchanges located in urban areas will be landscaped with native or ornamental non-invasive species.		Yes	R.E., Constr. Liaison, Biology					
Duff (top soil) from areas with coastal sage scrub and chaparral will be saved to aid in revegetating slopes with native species.		Yes	R.E., Constr. Liaison, Biology					
Salvaging of rare plants and/or soil supporting San Diego fairy shrimp prior to grading is recommended where practicable.		Yes	R.E., Constr. Liaison, Biology					
All temporary impact areas will be revegetated and restored to pre-existing conditions. Plants salvaged from construction areas will be placed on created slopes or in an offsite mitigation area.		Yes	R.E., Constr. Liaison, Biology					
Fueling of construction equipment should only occur at a designated area at a distance greater than 100 feet from drainages, and associated plant communities to preclude adverse water quality impacts. Fuel cans and fueling of tools will not occur within drainages.		Yes	R.E., Constr. Liaison, Biology					
Lighting used at night for construction will be shielded away from environmentally sensitive areas and wildlife corridors.		Yes	R.E., Constr. Liaison, Biology					

Task and Brief Description	Ref.	Design/Builder Responsible for Compliance?	Caltrans Construction Responsible Branch / Staff	Timing / Phase	NSSP, SSP, Std Spec, Permit	Action Taken to Comply/Remarks	Construction Task Completed	
							Initial	Date
Landscaping should not use plants that require intensive irrigation, fertilizers or pesticides adjacent to preserved areas, and water runoff from landscaped reas should be directed away from native habitats and/or treated within the project footprint.		Yes	R.E., Constr. Liaison, Biology					
A draft list of species to be used in the landscaping must be submitted to fish and wildlife for approval. A final ilst of species must be submitted to Fish and Wildlife within 30 days of receiving approval of the draft list of species.		Yes	R.E., Constr. Liaison, Biology					
No plants listed on the California Invasive Plant Councils, Invasive Plant Inventory list are allowed to be used on the project.		Yes	R.E., Constr. Liaison, Biology					
Dust generated by construction will be controlled as necessary.		Yes	R.E., Constr. Liaison, Biology					
Permanent impacts to sensitive upland vegetation will be mitigated by preservation offsite at Sage Hill Mitigation Site. As stated in the Biological Opinion			R.E., Constr. Liaison, Biology					
Permanent and temporary impacts to wetland/riparian habitats will be mitigated offsite at Deer Canyon Mitigation Site (Pardee). As stated in the Biological Opinion			R.E., Constr. Liaison, Biology					

Task and Brief Description	Ref.	Design/Builder Responsible for Compliance?	Caltrans Construction Responsible Branch / Staff	Timing / Phase	NSSP, SSP, Std Spec, Permit	Action Taken to Comply/Remarks	Construction Task Completed	
							Initial	Date
Impacts to occupied California gnatcatcher coastal sage scrub and coastal sage scrub chaparral will be mitigated at a 1:1 ratio at the Sage Hill mitigation site. As stated in the Biological Opinion			R.E., Constr. Liaison, Biology					
Permanent and temporary impacts to "rut" pools and species will be mitigated at a 30-acre site on Del Mar Mesa (Zamudio). As stated in the Biological Opinion			R.E., Constr. Liaison, Biology					
WATER QUALITY/NPDES			R.E., Constr. Liaison, Biology					
Best Management Practices will be implemented to address potential water quality impacts during the planning and design, construction, and operational (maintenance) stages.		Yes	R.E., Constr. Liaison, Biology					
Comply with the State Wide Storm Water Management Plan. Short-term potential impacts to water quality during the construction phase are prevented/minimized with Construction Site BMPs while the long-term potential impacts during the facility operation and maintenance are prevented/minimized through the implementation of Design Pollution Prevention BMPs, Treatment BMPs and Maintenance BMPs.		Yes	R.E., Constr. Liaison, Biology					

Task and Brief Description	Ref.	Design/Builder Responsible for Compliance?	Caltrans Construction Responsible Branch / Staff	Timing / Phase	NSSP, SSP, Std Spec, Permit	Action Taken to Comply/Remarks	Construction Task Completed	
							Initial	Date
PALEONTOLOGY								
A Paleontological Mitigation Plan (PMP) must be developed.		Yes	R.E., Constr. Liaison, Cultural					
A qualified paleontologist will be at the pre-construction meeting to consult with the grading and excavation contractors concerning excavation schedules, paleontological field techniques, and safety issues.		Yes	R.E., Constr. Liaison, Cultural					
Grading plans will be provided to the paleontologist at least one week prior to the initiation of earth-moving activities.		Yes	R.E., Constr. Liaison, Cultural					
A paleontological monitor will be on-site on a full-time basis during the original cutting of previously undisturbed deposits of high or moderate paleontological resource potential, and on-site on a part-time basis during the original cutting of previously undisturbed deposits of low paleontological resource potential (sedimentary deposits of younger alluvium), to inspect exposures for contained fossils.		Yes	R.E., Constr. Liaison, Cultural					
As grading progresses, the qualified paleontologist and paleontological monitor will have the authority to reduce the scope of the monitoring program to an appropriate level if it is determined that the potential for impact to paleontological resources is lower than anticipated.		Yes	R.E., Constr. Liaison, Cultural					

Task and Brief Description	Ref.	Design/Builder Responsible for Compliance?	Caltrans Construction Responsible Branch / Staff	Timing / Phase	NSSP, SSP, Std Spec, Permit	Action Taken to Comply/Remarks	Construction Task Completed	
							Initial	Date
When fossils are discovered, the paleontologist (or paleontological monitor) will recover them. In most cases, this fossil salvage can be completed in a short period of time. If necessary, the paleontologist (or paleontological monitor) will be allowed to briefly redirect, divert, or halt grading. However, some fossil specimens (such as a complete large mammal skeleton) may require an extended salvage period. In these instances, the paleontologist (or paleontological monitor) will be allowed to redirect, divert, or halt grading to allow recovery of fossil remains in a timely manner. Because of the potential for the recovery of small fossil remains, such as isolated mammal teeth, it may be necessary to set up a screen-washing operation on the site.		Yes	R.E., Constr. Liaison, Cultural					
During the monitoring and recovery phases of the PMP, the qualified paleontologist and/or the paleontological monitor will also routinely collect stratigraphic data (e.g., lithology, vertical thickness, lateral extent of strata, nature of upper and lower contacts, and taphonomic character of exposed strata.) Collection of such data is critical for providing a stratigraphic context for any recovered fossils.		Yes	R.E., Constr. Liaison, Cultural					

Task and Brief Description	Ref.	Design/Builder Responsible for Compliance?	Caltrans Construction Responsible Branch / Staff	Timing / Phase	NSSP, SSP, Std Spec, Permit	Action Taken to Comply/Remarks	Construction Task Completed	
							Initial	Date
Fossil remains collected during monitoring and salvage will be cleaned (removal of extraneous enclosing sedimentary rock material), repaired (consolidation of fragile fossils and gluing together of broken pieces), sorted (separating fossils of the different species), and cataloged (scientific identification of species, assignment of inventory tracking numbers, and recording of these numbers in a computerized collection database) as part of the mitigation program.		Yes	R.E., Constr. Liaison, Cultural					
Prepared fossils, along with copies of all pertinent field notes, photos, and maps, will be deposited (as a donation) in an accredited scientific institution with permanent paleontological collections, such as the San Diego Natural History Museum. Donation of the fossils will be accompanied by financial support for preparation, curation, and initial specimen storage, if this work has not already been completed.		Yes	R.E., Constr. Liaison, Cultural					
A final summary report will be completed. It will outline the results of the mitigation program. This report will include discussion of the methods used, stratigraphic section(s) exposed and documented, fossils collected, and significance of recovered fossils.		Yes	R.E., Constr. Liaison, Cultural					
Hazardous Waste								
Treated Wood Waste		Yes	R.E., Constr. Liaison, Haz. Waste		Std Spec 2006	Comply with Standard Special Specification (SSP) 14-010		
Earth Material containing lead		Yes	R.E., Constr. Liaison, Haz. Waste		Std Spec 2006	Comply with SSP 15-027		

Task and Brief Description	Ref.	Design/Builder Responsible for Compliance?	Caltrans Construction Responsible Branch / Staff	Timing / Phase	NSSP, SSP, Std Spec, Permit	Action Taken to Comply/Remarks	Construction Task Completed	
							Initial	Date
Yellow paint stripe removal		Yes	R.E., Constr. Liaison, Haz. Waste		Std Spec 2006	Comply with SSP14-001		
Paint stripe removal other than yellow		Yes	R.E., Constr. Liaison, Haz. Waste		Std Spec 2006	Comply with SSP 15-301		
Demolition, renovation, or removal of Asbestos Containing Materials (ACMs)		Yes	R.E., Constr. Liaison, Haz. Waste		NSSP#	Sampling and Removal of Asbestos Containing Materials - Bridges and Open Structures		
CULTURAL								
If cultural materials should be discovered during construction, all earth-moving activity within and around the immediate discovery area will be diverted until qualified personnel could assess their nature and significance.		Yes	R.E., Constr. Liaison, Cultural					
Consultation with the City Archaeologist and Caltrans Archaeologist will ensure that if anything is discovered during construction that Section 106, CEQA, and City Guidelines will be followed.		Yes	R.E., Constr. Liaison, Cultural					
Should remains be discovered and further evaluation be necessary, construction will be diverted away from the find and sufficient time will be allowed for the proper professional recovery of the remains. Remains will be cleaned, catalogued, analyzed, reported, and curated in accordance with all appropriate professional archaeological standards.		Yes	R.E., Constr. Liaison, Cultural					
If human remains should be discovered, State Health and Safety Code §7050.5 states that further disturbances and activities will cease in any area or nearby area suspected to overlie remains, and the County Coroner contacted.		Yes	R.E., Constr. Liaison, Cultural					

Task and Brief Description	Ref.	Design/Builder Responsible for Compliance?	Caltrans Construction Responsible Branch / Staff	Timing / Phase	NSSP, SSP, Std Spec, Permit	Action Taken to Comply/Remarks	Construction Task Completed	
							Initial	Date
Pursuant to PRC §5097.98, if remains are thought to be Native American, the coroner will notify the NAHC who will then notify the Most Likely Descendent (MLD). The party discovering the remains will contact the District Archaeologist, so that consultation may take place with the MLD to provide for the respectful treatment and disposition of the remains. Further provisions of PRC §5097.98 will be followed, as applicable.		Yes	R.E., Constr. Liaison, Cultural					
NOISE								
All equipment should have sound-control devices no less effective than those provided on the original equipment. No equipment should have an unmuffled exhaust.		Yes	R.E., Constr. Liaison, Noise					
Implement appropriate additional noise abatement measures including, but not limited to, changing the location of stationary construction equipment, turning off idling equipment, rescheduling construction activity, notifying adjacent residents in advance of construction work, or installing acoustic barriers around stationary construction noise sources.		Yes	R.E., Constr. Liaison, Noise					

Task and Brief Description	Ref.	Design/Builder Responsible for Compliance?	Caltrans Construction Responsible Branch / Staff	Timing / Phase	NSSP, SSP, Std Spec, Permit	Action Taken to Comply/Remarks	Construction Task Completed	
							Initial	Date
VISUAL								
Native California trees such as oaks and pines will be planted near the middle of cut slopes (at least 30' from traveled way) in grouped clusters. Trees will not be placed near the tops of cut slopes where vertical forms will diminish easterly views from neighborhoods and commercial properties.		Yes	R.E., Constr. Liaison, Landscape					
Native shrubs will be used on all disturbed slopes adjacent to natural areas.		Yes	R.E., Constr. Liaison, Landscape					
Open views to the east will be preserved by minimal tree planting at the base of fill slopes. Native shrub plantings will be used in these locations.		Yes	R.E., Constr. Liaison, Landscape					
Wildflower groundcover will be planted intermittently along the edges of the freeway corridor to add seasonal accent color and for compliance with Federal funding requirements.		Yes	R.E., Constr. Liaison, Landscape					

Task and Brief Description	Ref.	Design/Builder Responsible for Compliance?	Caltrans Construction Responsible Branch / Staff	Timing / Phase	NSSP, SSP, Std Spec, Permit	Action Taken to Comply/Remarks	Construction Task Completed	
							Initial	Date
Drought tolerant ornamental trees, such as eucalyptus, will be planted at the vicinity of the structures to help visually diminish the scale.		Yes	R.E., Constr. Liaison, Landscape					
Riparian tree species, such as sycamores, will be planted where possible in the lowest areas to enhance the low valleys that cross the project and provide for a greater diversity of native tree species.		Yes	R.E., Constr. Liaison, Landscape					
Native landscape plantings will be provided on short slopes and at the base of walls at either side of wall structures. Native plantings may include shrubs, groundcover, and trees. Trees will be planted at mid slope (at least 30' from traveled way) or at lower levels to avoid blocking views to the east from the residential neighborhoods.		Yes	R.E., Constr. Liaison, Landscape					
Berms will be used in place of sound walls wherever possible, such as along the west side of the freeway approaching Governor Drive. The existing berm at this location will be relocated further to the west where space allows.		Yes	R.E., Constr. Liaison, Landscape					

Task and Brief Description	Ref.	Design/Builder Responsible for Compliance?	Caltrans Construction Responsible Branch / Staff	Timing / Phase	NSSP, SSP, Std Spec, Permit	Action Taken to Comply/Remarks	Construction Task Completed	
							Initial	Date
Texture and color of walls will blend with surrounding landscape and indigenous soils.		Yes	R.E., Constr. Liaison, Landscape					
Provide screening of walls with tree, shrub, and vine plantings.		Yes	R.E., Constr. Liaison, Landscape					
Employ measures to minimize graffiti, such as tree, shrub and vine plantings on walls.		Yes	R.E., Constr. Liaison, Landscape					
Architectural treatment of Design Build Noise Walls will be designed with the cooperation of the District Landscape Architect (DLA) and incorporate the conceptual block layout design in the RFP.		Yes	R.E., Constr. Liaison, Landscape					
Walls shall be constructed of split face concrete masonry units and colored an earth tone (tan/brown) to closely resemble RCP Block and Brick manufacturer color "Mission". Grout joints will match color of the block. Walls shall have evenly$_S$ paced 16"x8"x32" pilasters. Pilasters shall be constructed of split face block with a mortar cap. Field wall between pilasters shall be mixed 10" and 8" wide block to create shadows. The 10" width block will have the same core size as the 8" block. The wall shall include 10"x8"x8" smooth (precision) face accent blocks. Wall cap shall be 10" x 4"x16" precision blocks with a mortar cap. Wall shall begin and end with a pilaster except where the wall end dies into a berm.		Yes	R.E., Constr. Liaison, Landscape					

Task and Brief Description	Ref.	Design/Builder Responsible for Compliance?	Caltrans Construction Responsible Branch / Staff	Timing / Phase	NSSP, SSP, Std Spec, Permit	Action Taken to Comply/Remarks	Construction Task Completed	
							Initial	Date
Use transparent barriers when possible to preserve views from homes immediately adjacent to or that overlook the freeway at several locations near the I-805 / SR-52 interchange.		Yes	R.E., Constr. Liaison, Landscape					
Retaining walls that follow the contours of the topography and maintain a constant elevation at the top of wall will be used where appropriate. Wall layouts and profiles will be composed of long radius curves, with no tangents or points of intersection. This type of wall will be visually compatible with surrounding terrain and provide room at the base for a slope that will contain landscape screening.		Yes	R.E., Constr. Liaison, Landscape					
In areas too narrow to place a planting pocket, retaining walls will be recessed behind the face of safety barriers at a sufficient distance to allow architectural features to be included on the face of the retaining walls.		Yes	R.E., Constr. Liaison, Landscape					
In areas where space for architectural detailing will not exist, vertical concrete safety barriers will be considered. Vertical barriers add 12in (301mm) of additional width in which architectural elements such as mechanically stabilized earth (MSE) wall panel relief, pilasters, and wall caps can be included.		Yes	R.E., Constr. Liaison, Landscape					

Task and Brief Description	Ref.	Design/Builder Responsible for Compliance?	Caltrans Construction Responsible Branch / Staff	Timing / Phase	NSSP, SSP, Std Spec, Permit	Action Taken to Comply/Remarks	Construction Task Completed	
							Initial	Date
Architectural features, textures and integral concrete colors will be used to mitigate the appearance of retaining wall surfaces. Walls will incorporate architectural features such as pilasters and caps to provide shadow lines, provide relief from monolithic appearance, and reduce their apparent scale. Enhanced materials such as mosaic tile and weathering steel will also be used where appropriate to meet community context and design goals.		Yes	R.E., Constr. Liaison, Landscape					
Mechanically stabilized earth (MSE) walls will have custom designed panels that include integral color, and an enhanced surface texture.		Yes	R.E., Constr. Liaison, Landscape					
Retaining walls will be located at the top of slope wherever possible in road fill sections to provide a buffer area for landscape screening between the wall and the community.		Yes	R.E., Constr. Liaison, Landscape					
Grading will be designed using the techniques of contour grading that promote smooth transitions to existing landforms, eliminate appearance of engineered slopes and visually soften the contours. Stepped slopes in areas of cut will be considered. Stepped slopes in areas of cut are recommended where soils are highly erodible.		Yes	R.E., Constr. Liaison, Landscape					
Placement of landscape slopes, noise walls, barriers, drainage conveyances, and other roadway features can require special design. MSE walls will have custom designed panels that include enhanced surface texture, and a 4” minimum pattern reveal on each panel.		Yes	R.E., Constr. Liaison, Landscape					

Task and Brief Description	Ref.	Design/Builder Responsible for Compliance?	Caltrans Construction Responsible Branch / Staff	Timing / Phase	NSSP, SSP, Std Spec, Permit	Action Taken to Comply/Remarks	Construction Task Completed	
							Initial	Date
All visual mitigation features will be designed with the cooperation of the District Landscape Architect (DLA). The DLA will perform all visual mitigation monitoring.		Yes	R.E., Constr. Liaison, Landscape					
All park-n-ride facilities will be designed in coordination with the DLA.		Yes	R.E., Constr. Liaison, Landscape					
Landscape design guidelines will be implemented in consultation with the DLA.		Yes	R.E., Constr. Liaison, Landscape					
DAR structure columns will match existing bridge columns supports when present. New DAR structures will feature smooth curved forms in profile and section to minimize stark shadow lines where possible. Retaining walls will have a maximum height of 10 feet to minimize the structure height and retain views from adjacent neighborhoods.		Yes	R.E., Constr. Liaison, Landscape					
Landscaping will be provided within the Nobel Drive transit station and on all slopes and transitions to roadways and streets. Landscaping will be compatible with local landscape standards, including guidelines for screening and shade. Parking will be compatible with local development standards.		Yes	R.E., Constr. Liaison, Landscape					

Task and Brief Description	Ref.	Design/Builder Responsible for Compliance?	Caltrans Construction Responsible Branch / Staff	Timing / Phase	NSSP, SSP, Std Spec, Permit	Action Taken to Comply/Remarks	Construction Task Completed	
							Initial	Date
New bridge columns will match the existing bridge columns. Undercrossing widening will use cast-in-place box girder construction to match existing structures wherever possible. Stain shall be applied to the exterior surface of isolation casings at new and existing columns to produce a dark brown color with a matte finish		Yes	R.E., Constr. Liaison, Landscape					
If seismic retrofit work is required for existing columns, then the exposed column surface will be colored to match new columns. Column shape shall be visually compatible with existing column shape.		Yes	R.E., Constr. Liaison, Landscape					
The wall architectural treatment and detailing for the Carroll Canyon (DAR) Retaining Walls (Bridge No. 57 (NEW) (Design Build) shall be consistent with those being constructed by the Carroll Canyon (DAR) Retaining Walls (Bridge No. 57E0075/76) under Contract No. 11-2T0404.		Yes	R.E., Constr. Liaison, Landscape					
Retaining walls shall be enhanced with architectural detailing including wall pylons, concrete bracket, concrete shelf, grooves, corner transitions, pilasters, architectural caps, wall caps, weathering steel plates and random flute texture texture to reduce their apparent scale.		Yes						

Task and Brief Description	Ref.	Design/Builder Responsible for Compliance?	Caltrans Construction Responsible Branch / Staff	Timing / Phase	NSSP, SSP, Std Spec, Permit	Action Taken to Comply/Remarks	Construction Task Completed	
							Initial	Date
If struts are required, then architectural treatment shall be similar to Contract No.11-2T0404. Similar architectural detailing would include architectural shelf, strut corbel, weathering steel sconces, concrete brackets on shelf, wall caps, pilasters, and other architectural treatment shown on the Elevations.		Yes						
The exposed face of cast-in-place retaining wall concrete shall be integrally colored with a variable sand blast finish ranging from medium to heavy. Vertical barriers shall be integrally colored. Concrete cap between safety barrier and wall shall be integrally colored with a variable sand blast finish. The color shall closely conform to Davis color No. 5447 "Mesa Buff".		Yes						
Access control fencing will be placed in visually unobtrusive locations at interchanges and bridges, if possible. Retaining walls and noise walls near right-of-way boundaries will be designed in such a way that access control fencing will not be needed. The 'dead' spaces that occur between walls and fences will be avoided if at all possible. Fencing will abut proposed noise walls at ends of or at changes in direction of walls, if possible.		Yes	R.E., Constr. Liaison, Landscape					

Task and Brief Description	Ref.	Design/Builder Responsible for Compliance?	Caltrans Construction Responsible Branch / Staff	Timing / Phase	NSSP, SSP, Std Spec, Permit	Action Taken to Comply/Remarks	Construction Task Completed	
							Initial	Date
Concrete lighting and signage pedestals will be designed in such a way that vertical barrier transitions are not required. Vertical concrete safety barriers will be considered for locations where space for pedestals is limited or to avoid potential snag issues. A barrier transition from the shorter barrier to the taller barrier is recommended at these locations. A continuous tall median barrier is to be avoided. Electrical and signal equipment at ramp termini will be placed in visually unobtrusive locations. Gore pavings will incorporate an enhanced architectural color and textural finish.		Yes	R.E., Constr. Liaison, Landscape					
Concrete interceptor ditches will not be placed at the toe of slopes adjacent to residential property or pedestrian use areas. Alternatives such as subterranean drainage placed below finish grade or a planted geo-reinforced drainage surface will be used.		Yes	R.E., Constr. Liaison, Landscape					

Task and Brief Description	Ref.	Design/Builder Responsible for Compliance?	Caltrans Construction Responsible Branch / Staff	Timing / Phase	NSSP, SSP, Std Spec, Permit	Action Taken to Comply/Remarks	Construction Task Completed	
							Initial	Date
Landscape areas beyond the gore will be paved with Minor Concrete "Textured Paving" (MCTP) up to the point where the horizontal distance between edge of paved surface to edge of paved surface measures 30'. MCTP will be integrally colored to closely resemble "Ginger," Solomon manufacturer Color No.288. and have an exposed aggregate texture. If high side super ditches encroach into the MCTP area, then they shall be colored and textured to match the MCTP.		Yes	R.E., Constr. Liaison, Landscape					
If raised median islands are constructed in the vicinity of Carroll Canyon Road than medians shall be paved with rock blanket to match paving installed by Contract No. 11-2T0404.		Yes	R.E., Constr. Liaison, Landscape					
Linear ditches or bio-swales will be designed for dual use as maintenance vehicle access facilities, wherever possible. Where possible, bio-swales will be located in non-obtrusive areas, be designed to appear as natural features, and incorporate applicable measures listed above for detention basins. Where possible, they should be shaped in an informal, curvilinear manner, incorporate slope rounding, variable gradients and be similar to the surrounding topography to deemphasize a defined outer edge.		Yes	R.E., Constr. Liaison, Landscape					
Maintenance access drives should be located in unobtrusive areas away from local streets and will consist of drivable inert materials with or without herbaceous groundcover that is visually compatible with the surrounding landscape.		Yes	R.E., Constr. Liaison, Landscape					

Task and Brief Description	Ref.	Design/Builder Responsible for Compliance?	Caltrans Construction Responsible Branch / Staff	Timing / Phase	NSSP, SSP, Std Spec, Permit	Action Taken to Comply/Remarks	Construction Task Completed	
							Initial	Date
Existing trees and rock outcroppings should be preserved to the greatest extent possible. A Vegetation Inventory Plan shall note trees within the construction limits and 200' beyond the limit. A Vegetation Protection and Removal Plan shall show the location of all trees greater than #" 4" (caliper) to be removed. The plans shall clearly show trees to remain by identifying each tree or group of trees by quantity and species. Trees to remain shall be protected with temporary fencing. Removed trees and shrubs (except removed exotic plant materials) may be reduced to chips.		Yes	R.E., Constr. Liaison, Landscape					
Avoid placement of construction use areas such as staging, material storage, construction office and access roads in landscape areas. When roadside staging areas are vacated, the soil shall be ripped and hydroseeded with a mix approved by the District Biologist and Landscape Architect. Staging area locations are subject to approval by District Environmental Division		Yes	R.E., Constr. Liaison, Landscape					
Soft surface alternatives to concrete ditches and rock slope protections will be utilized wherever possible.		Yes	R.E., Constr. Liaison, Landscape					
All visible concrete structures and surfaces will be of special design and adhere to the corridor design guidelines. Rock slope protection will consider use of aesthetically pleasing whole material of various sizes. Rock slope protection will be placed in a slurry bed that is integrally colored to match surrounding soils.		Yes	R.E., Constr. Liaison, Landscape					

Task and Brief Description	Ref.	Design/Builder Responsible for Compliance?	Caltrans Construction Responsible Branch / Staff	Timing / Phase	NSSP, SSP, Std Spec, Permit	Action Taken to Comply/Remarks	Construction Task Completed	
							Initial	Date
Concrete drainage devices located in highly visible areas in the roadside such as interceptor ditches, ditch lining, inlet aprons, gutters, head walls and channels will be colored to match the surrounding soil.• Concrete headwalls and wing walls shall be integrally colored or stained to match existing soils.		Yes	R.E., Constr. Liaison, Landscape					
Detention basins located at freeway interchanges or in areas of high visibility will incorporate the following design features. Basins will be located at least 10ft from clear recovery zones whenever possible to allow landscape screening to be installed. Basins will appear to be natural landscape features, such as, dry streambeds or riparian areas. Where possible they should be shaped in an informal, curvilinear manner, incorporate slope rounding, variable gradients, and be similar to the surrounding topography to deemphasize a defined outer edge.		Yes	R.E., Constr. Liaison, Landscape					
Whenever feasible, standpipes and other vertical appurtenances will be placed in unobtrusive locations and be painted an unobtrusive color.		Yes	R.E., Constr. Liaison, Landscape					
AC overside drains to biofiltration swales will be avoided wherever possible. Water shall be piped by a subsurface system from an inlet to the biofiltration swale.		Yes	R.E., Constr. Liaison, Landscape					
Concrete aprons at bio filtration swales shall be integrally colored with an exposed aggregate texture.		Yes	R.E., Constr. Liaison, Landscape					

Task and Brief Description	Ref.	Design/Builder Responsible for Compliance?	Caltrans Construction Responsible Branch / Staff	Timing / Phase	NSSP, SSP, Std Spec, Permit	Action Taken to Comply/Remarks	Construction Task Completed	
							Initial	Date
Bioswales and detention basin locations are to be coordinated with District Design, Hydraulics, Storm Water Pollution Control Specialist and Landscape Architect. Avoid placement of bioswales, in landscape areas wherever possible.		Yes	R.E., Constr. Liaison, Landscape					
All above grade temporary and permanent erosion control materials such as fiber rolls, netting, rope, jute mesh and blankets shall be biodegradable. Photodegradable plastics shall not be used. Wood stakes to be used for fiber rolls. Metal stakes shall not be used.		Yes	R.E., Constr. Liaison, Landscape					
Proposed bioswale treatment shallconsist of native turf sod; container plantings from liners or flats; or native grasses from liners or flats overseeded with native plants. Plant species and application rate (density per SQ FT) to be approved by the District Landscape Architect, Biologist, and Storm Water Pollution Control Specialist. Bioswales shall be irrigated. Bioswale planting areas shall be prepared before installing fiber rolls and gravel bags by adding soil ammendments, cultivation, irrigation installation, weed germination and weed killing.		Yes	R.E., Constr. Liaison, Landscape					
Bioswales and detention basins located near ESA's will be planted with appropriate native species. Bioswales and detention basins located adjacent to developed urban areas will be planted with native and drought tolerant non-invasive species.		Yes	R.E., Constr. Liaison, Landscape					

Task and Brief Description	Ref.	Design/Builder Responsible for Compliance?	Caltrans Construction Responsible Branch / Staff	Timing / Phase	NSSP, SSP, Std Spec, Permit	Action Taken to Comply/Remarks	Construction Task Completed	
							Initial	Date
At Rose Canyon and Sorrento Canyon, cut slopes shall be revegetated with native upland habitats with similar composition to those within the project area.		Yes	R.E., Constr. Liaison, Landscape					
At Rose Canyon and Sorrento Canyon Fill slopes and areas adjacent to wetlands and drainages shall be revegetated with appropriate native upland and wetland non-invasive species. The revegetated areas will be temporarily irrigated with an automatic, below grade system. Trees shall be on a separate bubbler system. Slopes 4:1 or greater will be planted with native container plants (trees and shrubs) and seed selected by the District Biologist and Landscape Architect. Trees and shrubs (minimum 1 gal size shrubs, and 5 gal size trees) to be planted at a minimum of one plant per 100 square feet of disturbed area. Plantings shall be 40% trees and 60% shrubs.		Yes	R.E., Constr. Liaison, Landscape					
There will be at least three years of plant establishment/maintenance on these slopes to control invasive weeds. All disturbed areas less than 4:1 will stabilized by Erosion Control Hydraulic Mulch (Polymer Stabilized Fiber Matrix) containing appropriate native upland or wetland non-invasive species.		Yes	R.E., Constr. Liaison, Landscape					

Task and Brief Description	Ref.	Design/Builder Responsible for Compliance?	Caltrans Construction Responsible Branch / Staff	Timing / Phase	NSSP, SSP, Std Spec, Permit	Action Taken to Comply/Remarks	Construction Task Completed	
							Initial	Date
At Governor Drive, disturbed areas shall be treated with Erosion Control (PSFM) with a seed mix consisting of native species produced in southern California. Total Pure Live Seed shall be from 20-35 lbs/acre dependent on the slope ratio, slope aspect, soil fertility and soil erodability. Seed Mixes shall contain a minimum of 8 species. Mixes are subject to the approval of District Biologist, District Landscape Architect and District Erosion Control Specialist.		Yes	R.E., Constr. Liaison, Landscape					
Seed Mix species include: Castilleia exserta (Owl's Clover), Encelia californica(Bush Sunflower), Eriogonum fasciculatum var. fasciculatum (Flat-topped Buckwheat), Eriophyllum confertiflorum (Golden Yarrow), Eschscholzia californica (California Poppy), Lasthenia californica (Dwarf Goldfields), Leymus triticoides (Creeping Wildrye), Lotus scoparius (Deerweed), Nasella pulchra (Purple Needlegrass), Sisyrinchium bellum (Blue-eyed Grass) and Viguirea laciniata (San Diego Sunflower).		Yes	R.E., Constr. Liaison, Landscape					
The use of pervious concrete for storm water pollution prevention will be considered to avoid adverse visual impacts. Project features such as interceptor ditches, inlet aprons, gutters, maintenance access road, maintenance vehicle pullouts, and parking lots could consist of pervious concrete and perhaps serve a dual purpose.		Yes	R.E., Constr. Liaison, Landscape					
TRAFFIC								

Task and Brief Description	Ref.	Design/Builder Responsible for Compliance?	Caltrans Construction Responsible Branch / Staff	Timing / Phase	NSSP, SSP, Std Spec, Permit	Action Taken to Comply/Remarks	Construction Task Completed	
							Initial	Date
A Transportation Management Plan (TMP) will be prepared to minimize the impact of construction activities on highway users. Preceding roadway design, a final TMP, will be prepared to reduce potential construction-related traffic conflicts, detours, and delays.		Yes	R.E., Community					
GeoTech Drillings								
Remove and properly dispose of any waste discharge resulting from drilling operations.		Yes	Constr. Liaison					
Utilize Construction Entrance or Street Sweeping to reduce tracking of dirt onto the roadways.		Yes	Constr. Liaison					

EXHIBIT 6-C

Utility Tracking Report

SR-805-EA 2T2001-Utilities Tracking Report

Date of last revision _____

this document was prepared by _____

Route:

P.M:

Project Description:

Conflict No.	Utility Sheet No.	Pothole No. *(On U-sheets)*	Owner	Utility Description	Pothole/Manhole/Vault..etc Location	Conflict Location	Utility Conflict/ Work Description	Investigation			Depth	Impact?		**Utility Relocation Action**						***Resp. Party***	***Required Completion Date***	Comments
								Pothole	Manhole	Markout	**(ft)**	Y	N	Remove	Relocate ***RB-*** Reloc.Before ***RD-*** Reloc.During	Abandon	Protect in Place	No Conflict	Other	***U-*** Utility Co ***C-*** Contractor		

EXHIBIT 13-B

Structural Performance Criteria of Carroll Canyon DAR BOH

This exhibit is provided as an electronic file.

EXHIBIT 13-B
Structural Performance Criteria of Carroll Canyon DAR BOH

13-B.1 General

The Carroll Canyon DAR BOH shall meet the structural performance criteria as in this technical provision. When there is a conflict between these technical provisions and other requirements in the RFP and/or Caltrans Standards, the more conservative requirements shall govern.

13-B.2 As-Built Bridge Response

The following are the structural performance of the Platform structure of the Carroll Canyon Road (CCR) Bridge (Bridge No. 57C0786):

Structural Free-Vibration Period:

1st Primary Mode: T = 1.35 seconds in the North-South direction

2nd Primary Mode: T= 1.3 seconds in the East-West direction

Seismic Response Spectrum Analysis:

Maximum seismic demand displacements at the hinge between the CCR Bridge Platform and the Carroll Canyon DAR BOH:

Case 1 (1.0xEast-West Direction + 0.3x North-South Direction):

Displacement (North-East Direction)	Displacement (South-West Direction)
12 inch (East) and 3.5 inch (North)	12 inch (West) and 3.5 inch (South)

Case 2 (0.3xEast-West Direction + 1.0x North-South Direction):

Displacement (North-East Direction)	Displacement (South-West Direction)
2.5 inch (East) and 10.7 inch (North)	2.5 inch (West) and 10.7 inch (South)

The Design-Build shall verify the free-vibration and seismic displacement demands and other seismic response results from independent dynamic analysis using 3-Dimensional grillage or shell-element models.

13-B.3 Allowable Loads

The maximum applied loads allowed to be transmitted from the Carroll Canyon DAR BOH to the seat hinge for the Platform structure of the Carroll Canyon Road (CCR) Bridge are listed as follows:

i. Vertical Dead Loads (unfactored)- distributed thru 4 bearing pads
   DL = 833 kips including hinge diaphragm total
   ADL = 191 kips total

ii. Vertical Live Loads (unfactored)- distributed thru 4 bearing pads
   LL (H) = 313 kips total
   LL (Permit) = 414 kips total

iii. Longitudinal force (factored)- distributed thru 4 bearing pads
   Nu = 412 kips total

iv. Transverse Force (factored)
Vu= 1024 kips total
Vu= 512 kips per shear key for a total of 2 shear keys

13-B.4 Structure Performance

The structural performance of the Carroll Canyon DAR BOH shall meet the following criteria:

i. Balanced Frame- The Carroll Canyon DAR BOH and the Platform of the CCR Bridge shall meet the following revised Equation (7.3R) in Section 7.1.2 of the Caltrans Seismic Design Criteria(SDC):

(7.3R)

All references to Equation (7.3) in the SDC shall use the above revised Equation (7.3R)

ii. The structural displacement and seismic performance of the Carroll Canyon DAR BOH shall be determined by using a combined model of the Carroll Canyon DAR BOH and the CCR Bridge Platform using 3-Dimensional grillage or shell-elements. The analysis shall account for the interaction between the Carroll Canyon DAR BOH and the CCR Bridge Platform.

iii. Hinge restrainers should be provided as secondary members to prevent unseating of the DAR BOH span.

iv. The Movement Rating of the hinge joint between the CCR Bridge Platform structure and the Carroll Canyon DAR BOH shall be equal or less than 4 inches.

v. Joint seal assembly shall be used at the joint.

EXHIBIT 15-A

I-805 North Phase I Visual Quality Manual

Exhibit 15-A: I-805 North Phase 1 Visual Quality Manual

ARCHITECTURAL TREATMENT REQUIREMENTS

BRIDGE STRUCTURES

General Architectural treatment

The following architectural treatment shall apply to all visual surfaces of bridge structure work:

- Column pier surface will be concrete and the shape and finish will be consistent with the existing column design.
- If isolation casings are required, stain shall be applied to the exterior surface of isolation casings to produce a dark brown color with a matte finish. (See Stain Galvanized Surfaces below)
- If seismic retrofit work is required for existing columns, the exposed column casing surface will be colored to match new columns. Column shape shall be visually compatible with new column shape.

Stain Galvanized Surfaces

- Stain shall be applied to the exterior surface of isolation casings at columns to produce a dark brown color with a matte finish. The stain is to be a clear solution of soft buffered organic acids that accelerates the oxidization process without compromising the protective qualities of the galvanized surfacing. No pigment based colorants should be added to achieve the desired color. The stain must react with the galvanized surface over a period of 5-10 days to produce a dark brown color with a matte finish. The stain must be resistant to fading in the sun.
- Mock ups: A test panel at least 4’ x 4’ in size shall be successfully completed at a location approved by the Department before beginning work on staining galvanized surfaces to demonstrate the color, including curing time and shall be submitted to the Department for written approval. The test panel approved by the Department shall be used as the standard of comparison in determining acceptability of galvanized surface stain.

CARROLL CANYON DAR BRIDGE OVERHEAD, Bridge No. 57-(NEW)

Architectural treatment:

- Bridge columns to be concrete and the shape and finish shall match the existing column design of the Carroll Canyon Road Bridge (Bridge No. 57C0786) currently under construction by project Contract No. 11-2T0404
- Avoid impacts to existing special-design tubular pipe hand railing

CARROLL CANYON DIRECT ACCESS WALLS, Bridge No. 57-NEW

Design Builder shall design the roadway cross-section to provide adequate room to incorporate the following architectural treatment:

Architectural treatment:

- Architectural treatment and detailing will be consistent with those being constructed for the Carroll Canyon (DAR) Retaining Walls (Bridge No. 57E0075/76) for project Contract No. 11-2T0404 and the proposed features of the Environmental Document. See attached Carroll Canyon (DAR) Retaining Wall Architectural Study Details & Architectural Elevation Studies and Carroll Canyon (DAR) Visual Simulations.

- Architectural treatment and detailing constructed by the Carroll Canyon DAR Contract No. 11-2T0404 shall serve as a referee sample.
- The wall terminus between the Carroll Canyon Road Bridge and the Soledad Canyon Bridge shall resemble the design of the wall profile and architectural treatment and detailing of the Carroll Canyon (DAR) Retaining Walls (Bridge No. 57E0075/76). See attached Carroll Canyon (DAR) Retaining Wall Architectural Study Details & Architectural Elevation Studies.
- Retaining walls shall be enhanced with architectural detailing including wall pylons, concrete bracket, concrete shelf, grooves, corner transitions, pilasters, architectural caps, wall caps, weathering steel plates and colored surface textures to reduce their apparent scale. Walls and barriers at base of wall shall be integrally colored. Retaining walls shall have a variable sand blast texture, random flute texture, wall cap, and grooves.
- The scale dimensions, thickness, battered surfaces, finishes and placement of architectural detailing shall be consistent with the architectural features in the contract plans for Contract No. 11-2T0404. If a barrier slab is required by the engineering design, the overhang above the retaining wall shall be dimensioned to match the size shown on the contract plans.
- If struts are required by the engineering design, the architectural treatment shall be similar to Contract No. 11-2T0404. Similar architectural detailing would include architectural shelf, strut corbel, weathering steel sconces, concrete brackets on shelf, wall caps, pilasters, grooves, textures and other architectural treatment shown on attached Architectural Elevation Studies and Visual Simulations. If struts are not required by the engineering design, the architectural treatment shall be adjusted to delete the struts and weathering steel sconce.
- All cast-in-place retaining wall concrete shall be integrally colored with a variable sand blast finish.
- A modified concrete safety barrier shall be considered for locations where space for architectural detailing is limited. Modified barriers will add additional width in which architectural features such as pilasters and wall cap can be implemented. Barriers at the base of retaining wall shall be integrally colored.
- If a cap is required between a safety barrier and wall, it shall be integrally colored concrete with a variable sand blast finish.
- All concrete surfaces except concrete barrier at base of wall shall receive a variable sandblast finish ranging from medium to heavy. Variable sandblast texture shall be accomplished by abrasive blasting of the concrete to produce a generally random, non-uniform finish. Minor blemishes, rock pockets, and tie holes shall be left in place at the discretion of the Department in order to achieve a rough, unfinished appearance. Medium sandblast finish shall generate a sandy texture with air and water bubbles in the concrete partially exposed. Heavy sandblast finish shall expose the concrete aggregate. At least half of each wall surface shall be comprised of heavy blast finish. The variable sandblast finish shall closely match the retaining walls constructed by Contract No. 11-2T0404 which shall serve as a referee sample.
- The random flute texture shall be a formed relief constructed to the dimensions and shapes shown on the plans for Contract No. 2T0404. Random flute texture shall receive a variable sandblast finish.
- The exposed faces of retaining walls and wall barriers shall be integrally pigmented concrete. The color shall closely conform to Davis color No. 5447 “Mesa Buff”. The colored concrete shall closely match the retaining walls constructed by Contract No. 11-2T0404 which shall serve as a referee sample.
- Mock Ups: A test panel at least 4’ x 4’ in size shall be successfully completed at a location approved by the Department, for each architectural texture, before beginning work on architectural textures. The test panel shall be constructed and finished with the materials, tools, equipment and methods to be used in

constructing the architectural texture, including colored concrete. If ordered by the Department, additional test panels shall be constructed and finished until the specified finish, texture and color are obtained, as determined by the Department. The test panel approved by the Department shall be used as the standard of comparison in determining acceptability of architectural texture for concrete surfaces.

- Weathering steel plates on retaining walls shall conform to the requirements in ASTM Designation: A588/A588M, the details shown on the plans, and these provisions. Headed studs shall conform to the details shown on the plans and the provisions for stud connectors in Section 55, "Steel Structures," of the Standard Specifications. Weathering steel plates shall be embedded in concrete and construction to the dimensions and shapes as shown on the plans. Surrounding wall texture shall receive a variable sandblast finish. Embedded steel plates shall be protected from the effects of sandblasting. Portions of weathering steel plates in contact with concrete, including headed studs, shall be cleaned and painted in conformance with "Clean and Paint Weathering Steel, " of the Special Provisions for Contract No. 11-2T0404.
- Weathering steel sconces shall conform to the requirements in ASTM Designation:A588/A588M, and this section. Welded steel mesh shall conform to the provisions in Section 75-1.02, "Miscellaneous Iron and Steel," of the Standard Specifications. Bolts, nuts and washers shall conform to the provisions for high-strength steel fastener assemblies in Section 75-1.02 "Miscellaneous Iron and Steel," of the Standard Specifications. Weathering steel sconces shall be anchored to concrete and constructed to the dimensions and shapes as shown on the plans. Surrounding wall texture shall receive a variable sandblast finish. Anchored sconces shall be protected from the effects of sandblasting. Portions of weathering steel sconces in contact with concrete shall be cleaned and painted in conformance with "Clean and Paint Weathering Steel," of the Special Provisions for Contract No. 11-2T0404.

Plan Requirements:

- Visual Quality Plans: Sketches depicting Architectural Elevations, Typical Cross Sections and special details showing true proportions of elements are required for review and approval by the District Landscape Architect prior to commencing work on construction plans.
- Release for Construction Plans depicting Architectural Elevations at a 1:1 Vertical/Horizontal scale and Architectural Details are required.

Mira Mesa Blvd UC - Widen, Bridge No. 57-0785R

- The outer girder shall have a sloped face to match the existing bridge design.
- Slope paving shall be integrally pigmented concrete to closely match the existing adjacent slope paving concrete. New slope paving shall be installed next to a clean, sawcut edge – preferably at a joint in the existing slope paving.
- Existing tieback retaining wall: If architectural treatment is damaged by construction activities or tagging, Design Builder shall patch and stain damaged areas to conform to existing wall cobble texture and colors. (See Prepare and Stain Concrete below). Apply anti-graffiti coating to the finished architectural treatment. Mock Ups: A test panel at least 4' x4' in size shall be successfully completed at a location approved by the Department before beginning work on slope to demonstrate the color and texture, including curing time and shall be submitted to the Department for written approval. The test panel approved by the Department shall be used as the standard of comparison in determining acceptability of concrete slope paving.

Prepare and Stain Concrete

- The work shall consist of preparing and staining the cobblestone texture of concrete surfaces as directed by the Department.

- After completion of the class concrete finish required in Section 51, "Concrete Structures," of the Standard Specifications, the surfaces of the concrete to be stained shall be prepared by a light water blasting of the surface as necessary to remove any remaining form oil or other contaminants. The concrete surface shall be thoroughly dry at the time stain is applied.
- The stain shall be a water based, styrene-acrylic coating which has been commercially manufactured for use as an exterior concrete stain. The stain shall be formulated an applied so that the color of the stained concrete closely conforms to the Referee Sample.
- Each coat shall be thoroughly cured before the succeeding coat is applied. Areas not to be stained shall be protected so that they remain stain free.

Retaining Walls

Retaining wall design shall incorporate the following measures unless otherwise specified:

Architectural treatment:

- All retaining walls shall have a cast in place concrete surface.
- Architectural treatment and detailing for retaining walls shall be consistent with those being constructed for the Carroll Canyon Retaining Walls for project Contract No. 11-2T0404. See attached Soledad Canyon Bridge Overhead Retaining Wall Architectural Study Details.
- Architectural treatment and detailing constructed by Contract No. 11-2T0404 shall serve as a referee sample.
- Retaining walls shall have a variable sand blast texture, random flute texture, pilasters, wall cap, and grooves.
- The scale dimensions, thickness, battered surfaces, finishes and placement of architectural detailing shall be consistent with the architectural features in the contract plans for Contract No. 11-2T0404. If the wall is designed with a barrier slab, the barrier slab overhang shall be dimensioned to match the size shown on the contract plans.
- All cast-in-place retaining wall concrete shall be integrally colored with a variable sand blast finish. Barriers at base of wall shall be integrally colored with a Class 1 finish. Random flute texture shall receive a variable sandblast finish. Color shall closely conform to Davis color No. 5447 "Mesa Buff".
- Retaining walls if required between SR 805 and Vista Sorrento Pkwy shall be located at the top of slope near Caltrans right-of-way and be consistent with retaining walls at I-5 and Lomas Santa Fe Drive in Solana Beach. The wall design shall include variable sand blast texture, random flute texture, pilasters, wall cap, grooves, integral color listed above and the following additional features: wall cap texture detail with weathering steel plates and tubular railing (modified). See attached Retaining Wall Study Architectural Details and Retaining Wall Study Tubular Railing Details. Architectural treatment and detailing constructed by the Carroll Canyon DAR Contract No. 11-2T0404 shall serve as a referee sample for textures and color. Architectural treatment and detailing at existing retaining walls at I-5 and Lomas Santa Fe Drive shall serve as a referee sample for wall cap texture detail with weathering steel plates and tubular railing (modified).
- Tubular Railing shall conform to the provisions in Section 83-1, "Railings," of the Standard Specifications and these special provisions. Weathering steel material used for rolled and welded structural steel sections of railing shall conform to the requirements in ASTM Designation: A 588/A 588M. Portions of tubular railing (modified) in contact with concrete shall be cleaned and painted in conformance with "Clean and Paint Weathering Steel" of the special provisions for Contract No. 11-2T0404.

- Mock Ups: A test panel for each architectural feature at least 4' x 4' in size shall be successfully completed at a location approved by the Department, for each architectural texture, before beginning work on architectural textures. The test panel shall be constructed and finished with the materials, tools, equipment and methods to be used in constructing the architectural texture, including colored concrete. If ordered by the Department, additional test panels shall be constructed and finished until the specified finish, texture and color are obtained, as determined by the Department. The test panel approved by the Department shall be used as the standard of comparison in determining acceptability of architectural texture for concrete surfaces.

Plan Requirements:

- Visual Quality Plans: Sketches depicting Architectural Elevations, Typical Cross Sections and special details showing true proportions of elements are required for review and approval by the District Landscape Architect prior to commencing work on construction plans.
- Release for Construction Plans depicting Architectural Elevations for all walls showing true proportion of elements drawn to a 1:1 Vertical/Horizontal scale and Architectural Details are required.

NOISE BARRIERS

Proposed scope:

Approaching the Governor Drive southbound off-ramp, the project would construct a noise berm/wall combination along the westerly side of the roadway. A noise wall would be constructed at the south end, transitioning to a noise berm/wall combination, and end with a planted noise berm at the north end.

Noise berm grading:

Where conditions permit, grading would be designed using the techniques of contour grading that promote smooth transitions to existing landforms, eliminate the appearance of engineered slopes and visually soften the contours.

Noise System design:

- All sound walls should be simplified in their design, and to the greatest extent possible kept small in size, bulk and mass.
- Minimize the visual impacts of walls by utilizing wall profiles and alignments that blend with the natural terrain; and customize the grading to reduce the need for walls.

Sound wall architectural treatment:

Architectural treatment and architectural detailing shall be consistent with attached "Masonry Sound Walls Architectural Study Details No. 1".

- Walls will be constructed of split face concrete masonry units and colored an earth tone (tan/brown) to closely resemble RCP Block and Brick manufacturer color "Mission". Grout joints will match color of the block. Walls shall have evenly spaced pilasters a maximum of 48' on center. Pilasters shall be constructed of 16" x8" x16" split face block. Split face texture shall be on all exposed sides except where block face meets field wall. Pilaster shall be capped with a smooth 16" x4" x16" block and mortar cap. The wall shall be constructed with all single (16" wide) or all double (32") wide pilasters. If the average wall ht above finish grade is 12' or higher, the wall shall have all double pilasters. All pilasters shall be plumb. Field wall between pilasters shall be mixed 10" and 8" wide split face block. The 10" wide block will have the same core side as the 8" wide block and will project 1" on both sides of wall. The wall shall have 10"x8"x8" smooth (precision) face accent blocks that will project 1" on both sides of wall. Wall cap shall be 10"x4"x16" smooth blocks with a mortar cap. Wall shall begin and end with a

pilaster except where the wall dies into a berm. Top of wall steps should occur at a pilaster wherever possible. Mid-wall steps between pilasters should be evenly spaced.

- Samples: Block and grout samples shall be submitted and approved by the Department, for each texture and color before beginning work on masonry block walls.

Plan Requirements:

Visual Quality Plans: Architectural Elevations, Typical Cross Sections, and Special Details showing true proportions of elements are required for review and approval by the District Landscape Architect prior to commencing work on construction plans. Conceptual Plans to include proposed berm grading with existing topography. Noise Wall elevation to show berm grading, noise line, wall steps, block pattern, wall cap, finish grade in front and behind wall. Typical section to show block pattern with block size called out, wall cap, footing, and finished grade.

Release for Construction Plans depicting Architectural Elevations showing true proportions of elements drawn to a 1:1 Vertical/Horizontal scale and Architectural Details are required.

Grading and Drainage

Drainage Facilities

- Concrete interceptor ditches will not be placed at the toe of slopes adjacent to residential property or pedestrian use areas. Alternatives such as subterranean drainage placed below finish grade or a planted geo-reinforced drainage surface will be used.
- Concrete drainage features such as interceptor ditches, ditch lining, inlet aprons, gutters, head walls and channels located in roadside areas will be colored to match the surrounding soil. Soft surface alternatives to concrete ditches and rock slope protection will be used whenever possible.
- Rock slope protection will be placed in a slurry bed that is integrally colored to match surrounding soils.
- Concrete headwalls and wing walls shall be integrally colored or stained to match existing soils.
- Project features such as interceptor ditches, inlet aprons, gutters, and maintenance vehicles pullouts could consist of pervious concrete. Pervious concrete shall be integrally colored to match the surrounding soil.

Grading

- Where conditions permit, grading will be designed using the techniques of contour grading that promote smooth transitions to existing landforms, eliminate the appearance of engineered slopes and visually soften the contours.
- Stepped slopes in areas of cut are recommended where soils are highly erodible. Slope rounding will be used to blend slopes with existing topography. Stepped slopes are recommended for cut slopes adjacent to Vista Sorrento Parkway.
- Existing trees and rock outcroppings should be preserved to the greatest extent possible.
- Slopes shall be in accordance with the requirements of the Highway Design Manual.
- Slopes flatter than 4:1 outside the clear recovery zone are desirable, and the Design Builder shall use them where they contribute to the quality of the existing topography, such as “daylighting” small cut areas.
- Adjust grading in order to minimize disturbance to the existing native vegetation.
- Where possible, design the side slopes and embankments to avoid the use of metal guardrails and end treatments. Terminate barriers into slopes wherever possible to avoid end treatments wherever possible.

Stormwater BMP Facilities

- AC overside drains to bio filtration swales will be avoided wherever possible. Water shall be piped by a subsurface system from an inlet to the bioswale
- Concrete aprons at bio filtration swales shall be integrally colored with an exposed aggregate texture. (See Minor Concrete Textured Paving below)
- Whenever feasible, standpipes, headwalls and other vertical appurtenances shall be located in unobtrusive locations and be stained an unobtrusive color.
- Where hydraulically feasible, bioswales will be located in non-obtrusive areas and be designed to appear as natural features. Where possible, they should be shaped in an informal, curvilinear manner, incorporate slope rounding, variable gradients and be similar to the surrounding topography to deemphasize a defined outer edge.
- Maintenance access drives should be located in unobtrusive areas away from local streets and will consist of drivable inert materials with or without herbaceous groundcover that is visually compatible with the surrounding landscape.

Contractor Use Areas

- Avoid placement of contactor use areas such as staging, material storage, contactor office and access or haul roads in landscape areas. When contractor use areas in non-irrigated brush areas are vacated, the soil shall be ripped and hydroseeded with a mix approved by the Department. Staging areas are subject to approval by the Department. If contractor use areas are approved by Department in landscaped areas, the area shall be ripped, irrigation systems shall be repaired and impacted plantings shall be replaced after the area is vacated. The preservation of property specification shall be enforced. Existing trees shall be protected whenever possible.

Lighting, Signage and Miscellaneous Freeway Appurtenances

Lighting and Sign Pedestals

- Concrete lighting and signage pedestals will be designed in such a way that vertical barrier transitions are not required. Vertical concrete safety barriers will be considered for locations where space for pedestals is limited or to avoid potential snag issues. A barrier transition from the shorter barrier to the taller barrier is recommended at these locations. A continuous tall median barrier is to be avoided.
- Electrical and signal equipment at ramp termini will be placed in visually unobtrusive locations.

Textured Paving

- Landscape areas beyond the gore will be paved with Minor Concrete Textured Paving (MCTP) up to the point where the horizontal distance between edge of paved surface to the edge paved surface measures 35'. MCTP will be integrally colored and textured to match the colored and textures paving constructed beyond the gores for theI-805 HOV/ Carroll Canyon Road Project Contract No. 11-2T0404. If high side super ditches encroach into the MCTP area, then they shall be colored and textured to match the MCTP.
- The following gore areas shall be paved with MCTP. NB offramp to Mira Mesa Blvd; NB offramp and onramp from Mira Sorrento Pl to 805 (3 total); additional areas to be paved with MCTP may be recommended by the Visual Quality Team.
- Minor Concrete Textured Paving shall consist of concrete with an exposed aggregate finish. The concrete shall have a color closely resembling "Ginger," Solomon manufacturer Color No. 288. Color shall be integral, chemically inert, fade resistant mineral oxide or synthetic type. See Contract No. 11-2T0404 Construction Details for paving section design and expansion joint layouts.

- Rock Blanket: If raised median islands are constructed, medians shall be paved with rock blanket to match paving installed by Contract No. 11-2T0404. Samples of rock (color and size) and mortar color shall be provided to the Department for review and approval. Rock for the rock blanket shall be clean, smooth rock obtained from a single source. Rock shall closely resemble "Arizona Cobble" by Southwest Boulder and Stone or "Arizona River Rock" by KRC Rock.

  Rock shall conform to the following grading:

Screen Size (Inches)	Percentage Passing (By Mass)
8	4
6	2-3.5
3	0-2

  Rock shall be secured in place with Class 2 concrete conforming to the provisions in Section 90, "Portland Cement Concrete," of the Standard Specifications and these special provisions. Concrete aggregate size shall be 19 mm maximum.

  Concrete shall have a color closely resembling "Lava", Solomon Colors No. 385. Color shall be integral, chemically inert, fade resistant mineral oxide or synthetic type.

  Prior to beginning rock blanket work, areas to receive the rock blanket shall be cleared in conformance with the provisions in "Roadside Clearing" of these special provisions.

  Concrete shall have an even, smooth surface before the rocks are placed.

  Rock shall be placed while concrete is still plastic, and spaced a maximum of 20 mm apart. The Contractor shall remove concrete adhering to the exposed surfaces of the rock. Loose rocks, or rock with a gap greater than 15 mm, measured from the edge of the rock to the surrounding concrete bedding shall be reset at the Design Builder by methods determined by the Department.

- Rubber Weed Control Mat shall be installed beneath roadside signs in textured paving areas. See Contract No. 11-2T0404 Sign Details for Weed Control Mat details.

  Weed control mat shall conform to the following:

  A. Mat shall be made from 100% California derived recycled tire rubber. Mat shall not include metal, but may include polyester based tire fiber.
  B. Mat shall be near black in color. Mat shall be a uniform color without variation between tiles or lots. Variations in color may be submitted for review and approval by the Engineer.
  C. Mat shall prevent sunlight and water from reaching the soil. Mat shall contain no hole or gap openings within the mat surface. Mat shall be flame resistant.
  D. Mat shall have overall dimensions as shown on the plans with a minimum thickness of 12.5. Mat shall have a minimum weight of 20 kilograms per square meter of material.
  E. Mat shall be pre-cut for a snug fit around post, as shown on the plans. Mat may contain scribe lines to serve as cutting guide of mat at posts, or have cut-out in-place before delivery.

  Openings for sign posts may be either prefabricated or fabricated in the field. Cuts shall be made in the mat and joined as recommended by the manufacturer. No cuts other than those required to install mat around signpost will be permitted for mat placed under signs.

  Mats shall be joined in accordance with the manufacturer's recommendations and as directed by the Department. Joints between mats and adjacent posts shall be sealed with adhesive caulkingAfter sealing, there shall be no openings between the mat and adjacent post. Following completion of mat placement

and sealing, the mat surface shall be flat, smooth, and in uniform contact with the soil surface, without bulges or wrinkles.

- Mock Ups: A test panel at least 4' x4' in size shall be successfully completed at a location approved by the Department before beginning work on paved areas for each textured paving to demonstrate the textured paving, including color, curing and finishing compounds, rock, mortar color, etc. and shall be submitted to the Department for written approval. The test panel approved by the Engineer shall be used as the standard of comparison in determining acceptability of color and texture for textured paving.

Access Control Fencing and Gates

- Access control fencing will be placed in visually unobtrusive locations at interchanges and bridges if possible. Fencing that butts up to an abutment wing wall shall not be taller than the bridge rail.
- Retaining walls and noise walls near right of way boundaries will be designed in such a way that access control fencing will not be needed. The "dead "space that occurs between walls and fences will be avoided if possible. Fencing will abut noise walls at a pilaster; end of wall or at changes in direction of wall if possible.

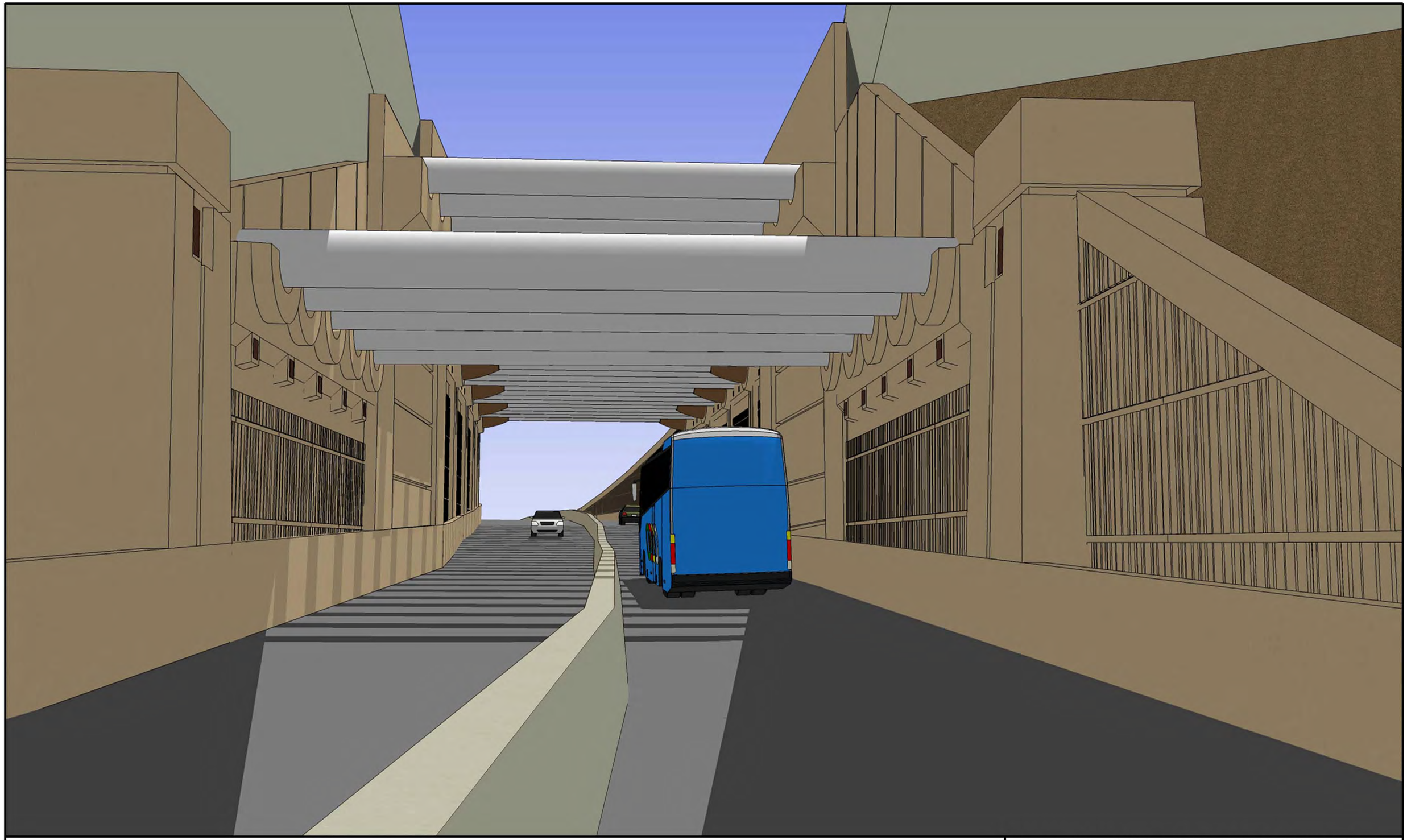

CARROLL CANYON (DAR) VISUAL SIMULATION

SOUTHBOUND VIEW AT ENTRY PYLON

SOURCE: ENVIRONMENTAL DOCUMENT

CARROLL CANYON (DAR) VISUAL SIMULATION

NORTHBOUND VIEW

SOURCE: ENVIRONMENTAL DOCUMENT

GENERAL NOTE

These "STUDY" details are schematic and incomplete and are intended to identify architectural treatment elements and detailing for this project.

See drawings for the Carroll Canyon (DAR) Retaining Walls Bridge No. 57E0075/76)for project Contract No. 11-2T0404 for more information on Details.

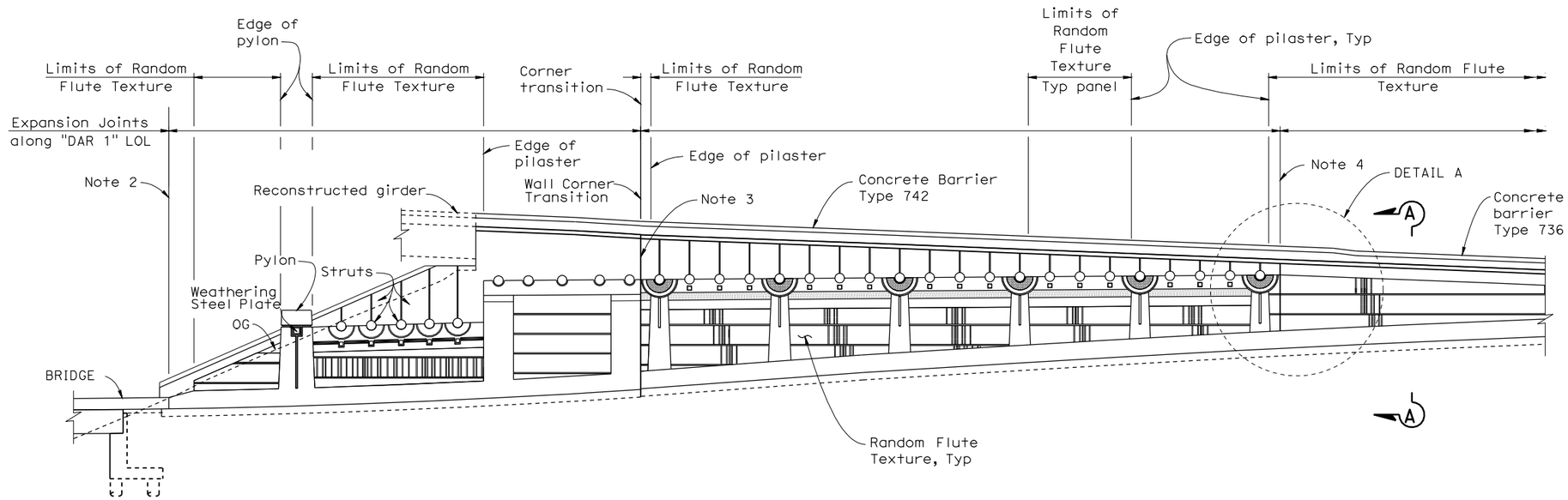

NOTES

1. Expansion Joint shall not extend into barrier slab, Type 736, or Type 742 barriers.
2. For "DETAIL A" and "DETAIL B" see "DAR 1 ARCHITECTURAL ELEVATION STUDY" sheet.
3. Smooth finish on face of corner transition.
4. Wall Expansion Joint
5. All cast in place retaining wall concrete shall be integrally colored with variable sand blast finish.
6. Type A barrier shall be integrally colored. Barrier cap shall be integrally colored with variable sand blast finish.
7. Extend expansion joint through Type A barrier.

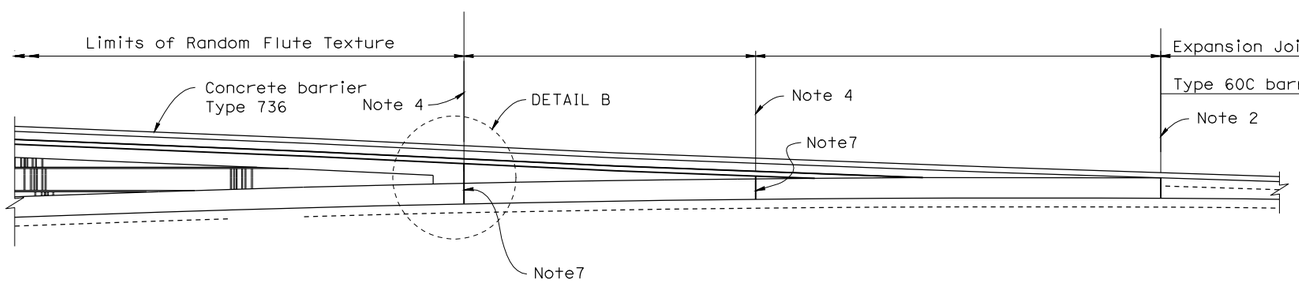

MIRROR ELEVATION ("DAR 1" WALL)(STUDY)
1:200

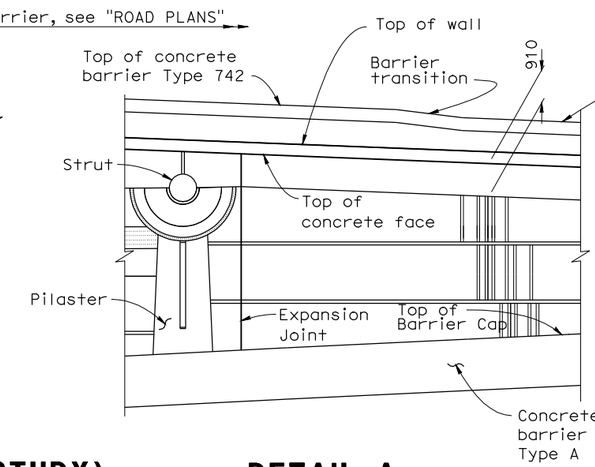

DETAIL A
1:80

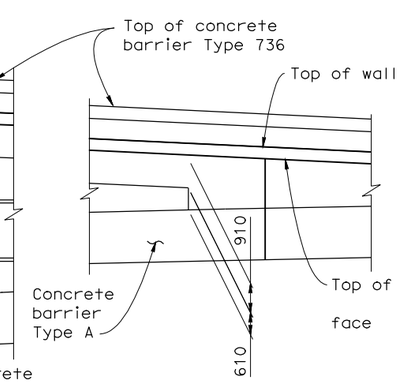

DETAIL B
1:80

ALL DIMENSIONS ARE IN MILLIMETERS UNLESS OTHERWISE SHOWN

FOR INFORMATION ONLY

CARROLL CANYON (DAR) RETAINING WALLS

DAR 1 ARCHITECTURAL ELEVATION STUDY

ORIGINAL SCALE IN MILLIMETERS FOR REDUCED PLANS 0 10 20 30 40 50 60 70 80 90 100

FILE => DAR-Arch DetElevSections-new.dgn

s115810 DATE PLOTTED => 14-JUL-2011 TIME PLOTTED => 12:34

GENERAL NOTE

These "STUDY" details are schematic and incomplete and are intended to identify architectural treatment elements and detailing for this project.

See drawings for the Carroll Canyon (DAR) Retaining Walls Bridge No. 57E0075/76)for project Contract No. 11-2T0404 for more information on Details.

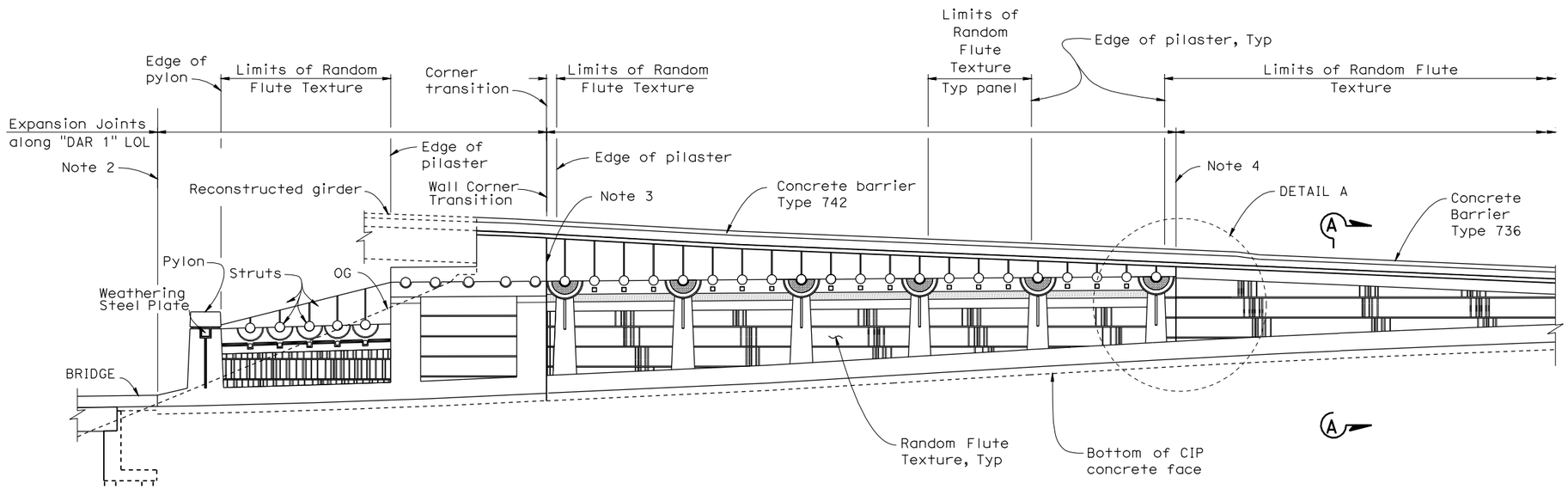

NOTES

1. Expansion Joint shall not extend into barrier slab, Type 736, or Type 742 barriers.
2. For "DETAIL A" and "DETAIL B" see "DAR 1 ARCHITECTURAL ELEVATION STUDY" sheet.
3. Smooth finish on face of corner transition.
4. Wall Expansion Joint
5. All cast in place retaining wall concrete shall be integrally colored with variable sand blast finish.
6. Type A barrier shall be integrally colored. Barrier cap shall be integrally colored with variable sand blast finish.
7. Extend expansion joint through Type A barrier.

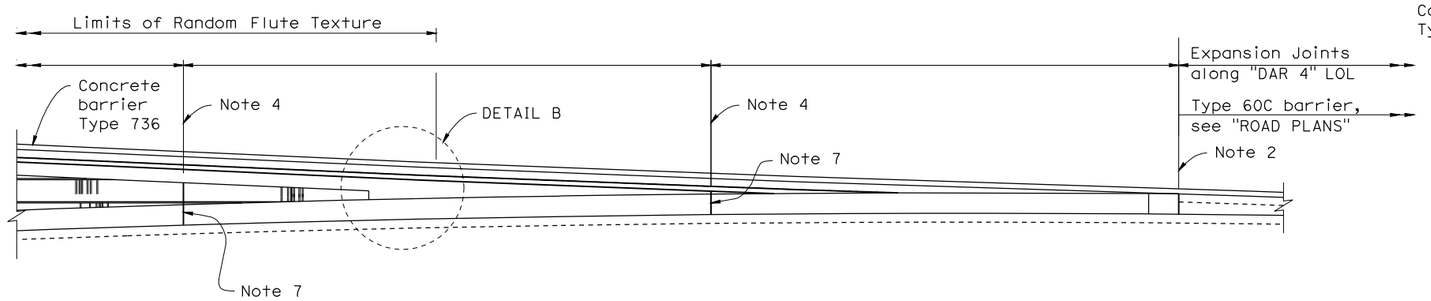

ELEVATION ("DAR 4" WALL)

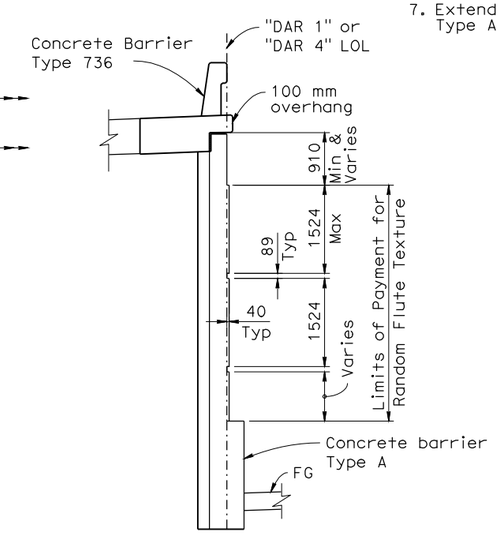

SECTION A-A

1:50

ALL DIMENSIONS ARE IN MILLIMETERS UNLESS OTHERWISE SHOWN

FOR INFORMATION ONLY

CARROLL CANYON (DAR) RETAINING WALLS

DAR 4 ARCHITECTURAL ELEVATION STUDY

ORIGINAL SCALE IN MILLIMETERS FOR REDUCED PLANS 0 10 20 30 40 50 60 70 80 90 100

FILE => DAR-Arch DetElevSections-new.dgn

s115810 DATE PLOTTED => 14-JUL-2011 TIME PLOTTED => 12:34

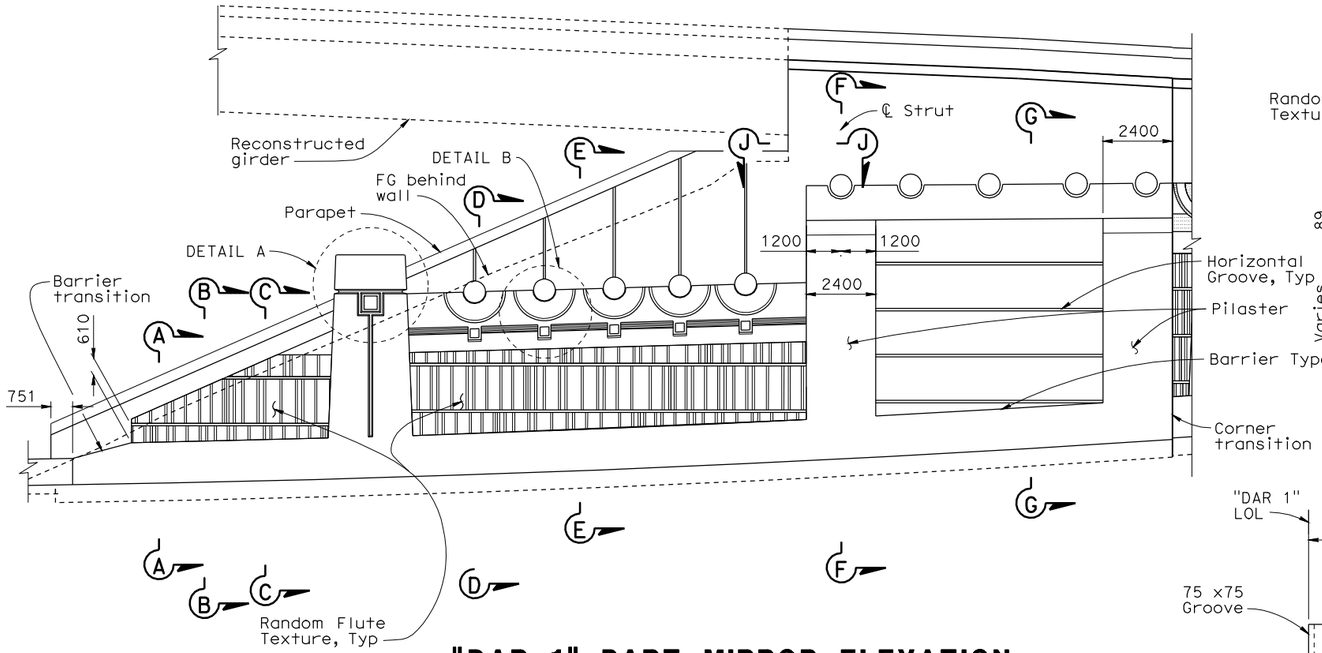

"DAR 1" PART MIRROR ELEVATION

1:100

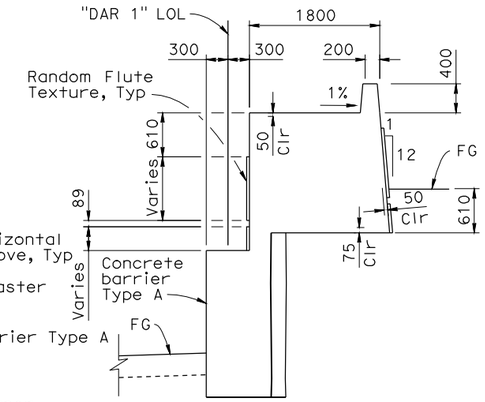

SECTION A-A

1:40

GENERAL NOTE

These "STUDY" details are schematic and incomplete and are intended to identify architectural treatment elements and detailing for this project.

See drawings for the Carroll Canyon (DAR) Retaining Walls Bridge No. 57E0075/76)for project Contract No. 11-2T0404 for more information on Details.

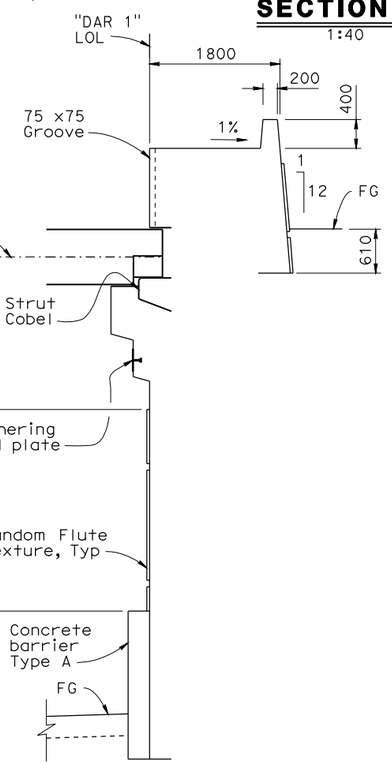

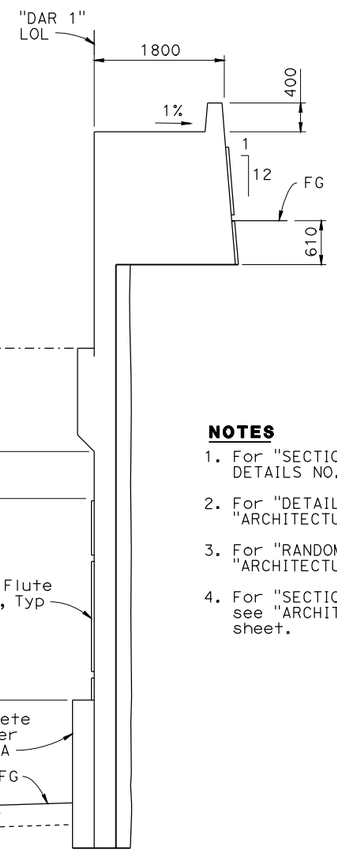

NOTES

1. For "SECTION J-J" see "ARCHITECTURAL DETAILS NO. 7" sheet similar detail.
2. For "DETAIL A" and "DETAIL B" see "ARCHITECTURAL DETAILS NO. 4" sheet.
3. For "RANDOM FLUTE TEXTURE" see "ARCHITECTURAL DETAILS NO. 6" sheet.
4. For "SECTION F-F" and "SECTION G-G" see "ARCHITECTURAL DETAILS NO. 2" sheet.

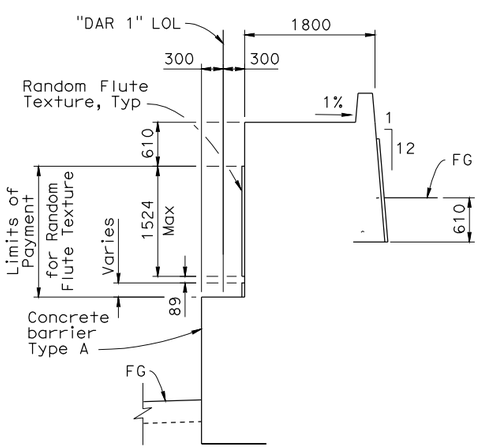

SECTION B-B

1:40

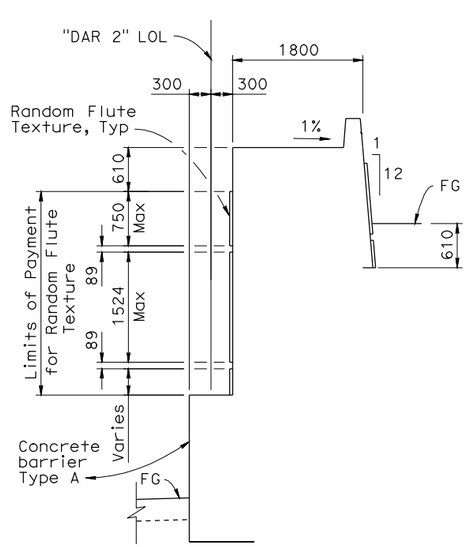

SECTION C-C

1:40

Note: See "SECTION B-B" on "ARCHITECTURAL DETAILS NO. 4" sheet for bracket, shelf and texture dimensions.

SECTION D-D

1:40

SECTION E-E

1:40

ALL DIMENSIONS ARE IN MILLIMETERS UNLESS OTHERWISE SHOWN

FOR INFORMATION ONLY

BRIDGE NO.	CARROLL CANYON (DAR) RETAINING WALLS
	ARCHITECTURAL STUDY DETAILS NO. 1

ORIGINAL SCALE IN MILLIMETERS FOR REDUCED PLANS 0 10 20 30 40 50 60 70 80 90 100

FILE => DAR-Arch DetElevSections-new.dgn

s115810 DATE PLOTTED => 14-JUL-2011 TIME PLOTTED => 12:34

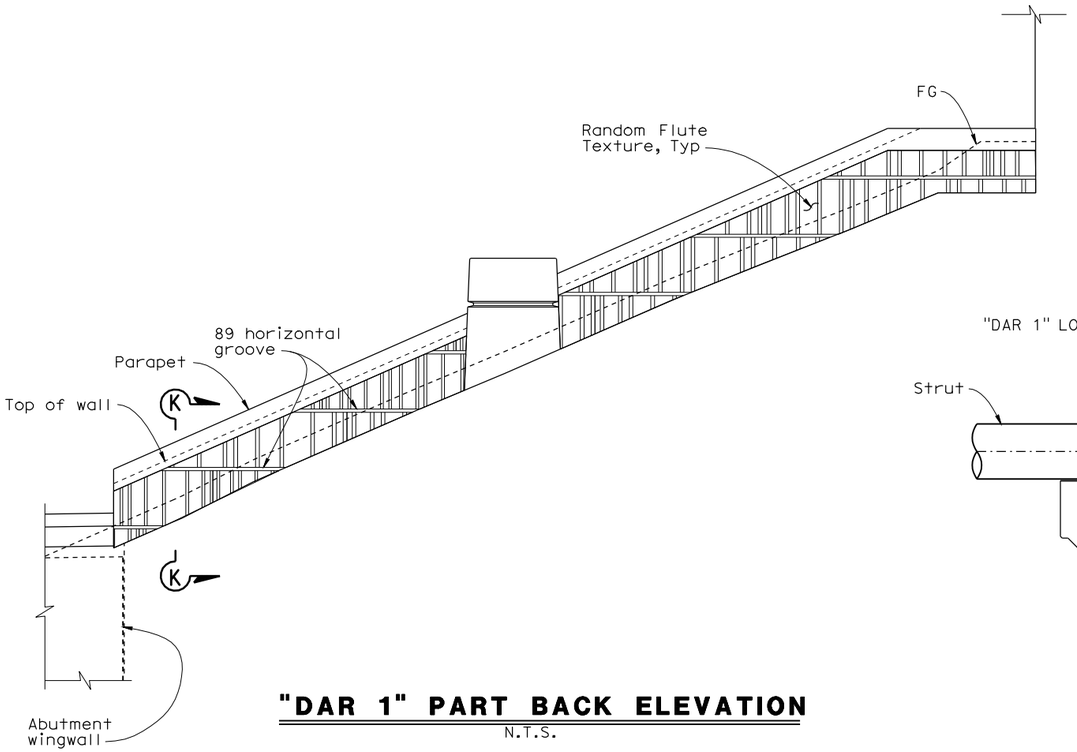

"DAR 1" PART BACK ELEVATION

N.T.S.

NOTES

1. For location of "SECTION F-F" and "SECTION G-G", see "ARCHITECTURAL DETAILS NO. 1" sheet.

GENERAL NOTE

These "STUDY" details are schematic and incomplete and are intended to identify architectural treatment elements and detailing for this project.

See drawings for the Carroll Canyon (DAR) Retaining Walls Bridge No. 57E0075/76)for project Contract No. 11-2T0404 for more information on Details.

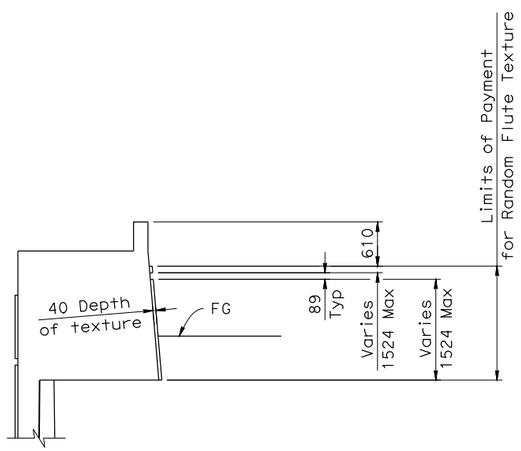

SECTION K-K

1:40

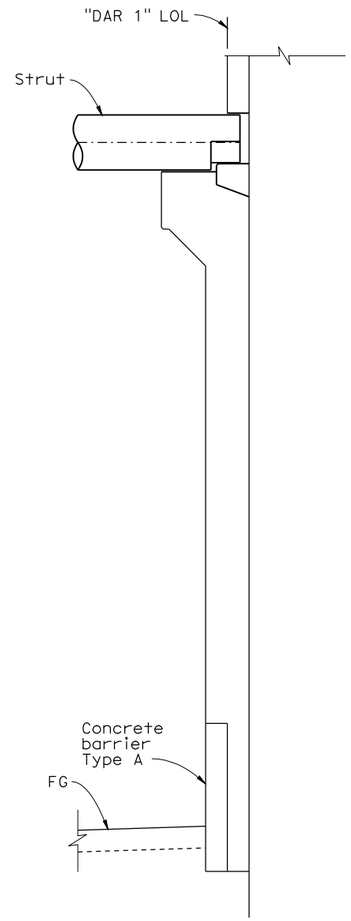

Note: See "SECTION C-C" on "ARCHITECTURAL DETAILS NO. 4" sheet for concrete shelf dimensions.

SECTION F-F

1:40

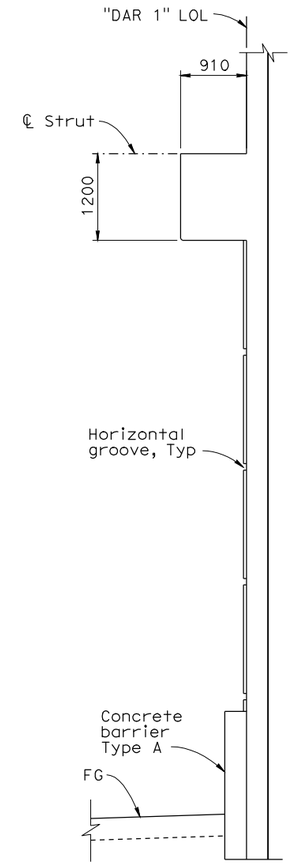

Note: See "SECTION D-D" on "ARCHITECTURAL DETAILS NO. 4" sheet for groove details.

SECTION G-G

1:40

ALL DIMENSIONS ARE IN MILLIMETERS UNLESS OTHERWISE SHOWN

FOR INFORMATION ONLY

CARROLL CANYON (DAR) RETAINING WALLS

ARCHITECTURAL STUDY DETAILS NO. 2

ORIGINAL SCALE IN MILLIMETERS FOR REDUCED PLANS 0 10 20 30 40 50 60 70 80 90 100

FILE => DAR-Arch DetElevSections-new.dgn

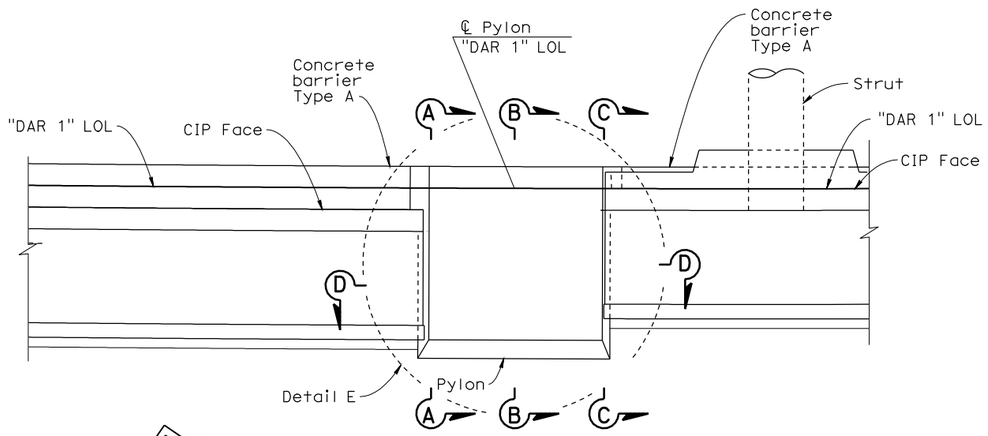

"DAR 1" PYLON PLAN
1:40

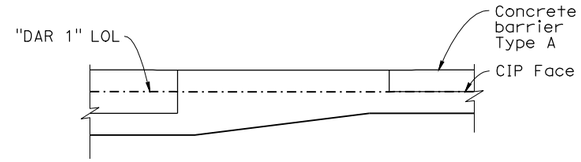

DETAIL E
1:40

GENERAL NOTE

These "STUDY" details are schematic and incomplete and are intended to identify architectural treatment elements and detailing for this project.

See drawings for the Carroll Canyon (DAR) Retaining Walls Bridge No. 57E0075/76)for project Contract No. 11-2T0404 for more information on Details.

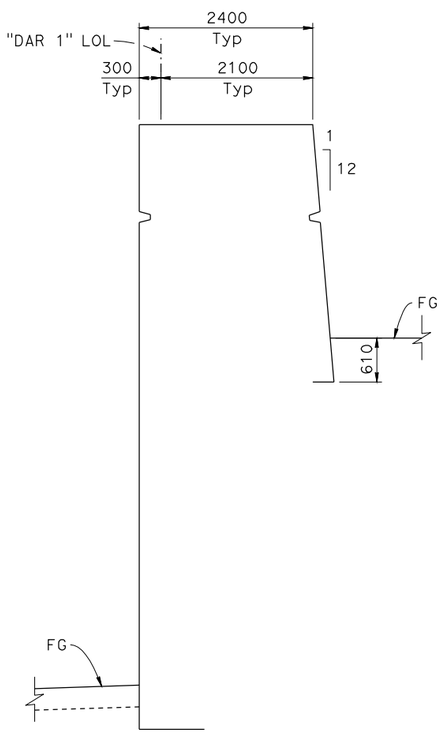

SECTION A-A
1:40

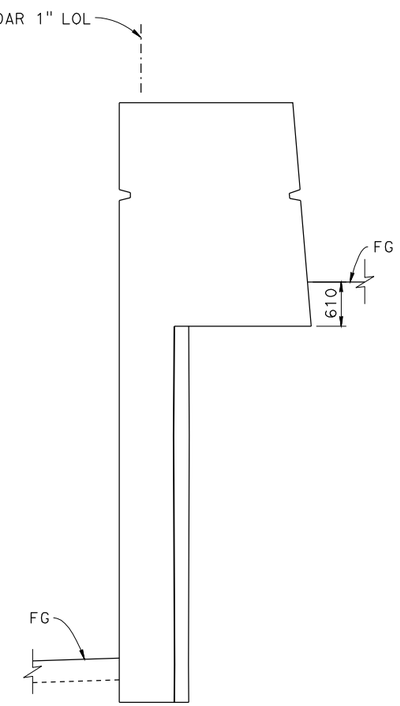

SECTION B-B
1:40

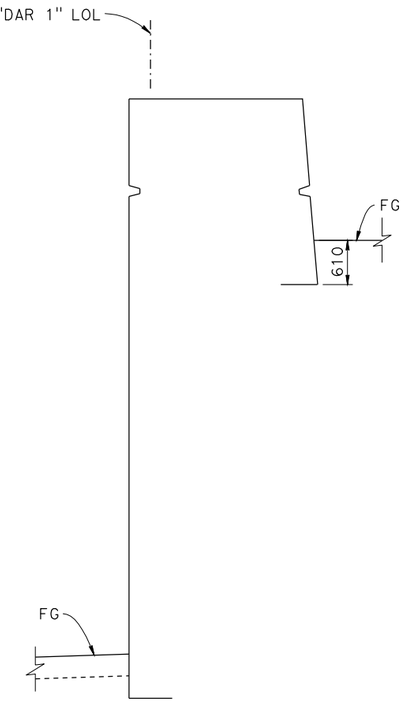

SECTION C-C
1:40

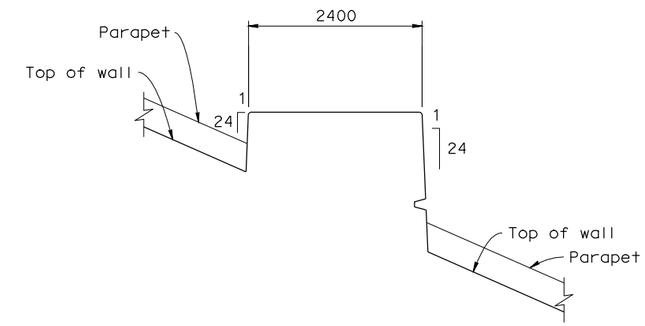

SECTION D-D
1:40

ALL DIMENSIONS ARE IN MILLIMETERS UNLESS OTHERWISE SHOWN

FOR INFORMATION ONLY

BRIDGE NO.

CARROLL CANYON (DAR) RETAINING WALLS

ARCHITECTURAL STUDY DETAILS NO. 3

ORIGINAL SCALE IN MILLIMETERS FOR REDUCED PLANS 0 10 20 30 40 50 60 70 80 90 100

FILE => DAR-Arch DetElevSections-new.dgn

s115810 DATE PLOTTED => 14-JUL-2011 TIME PLOTTED => 12:34

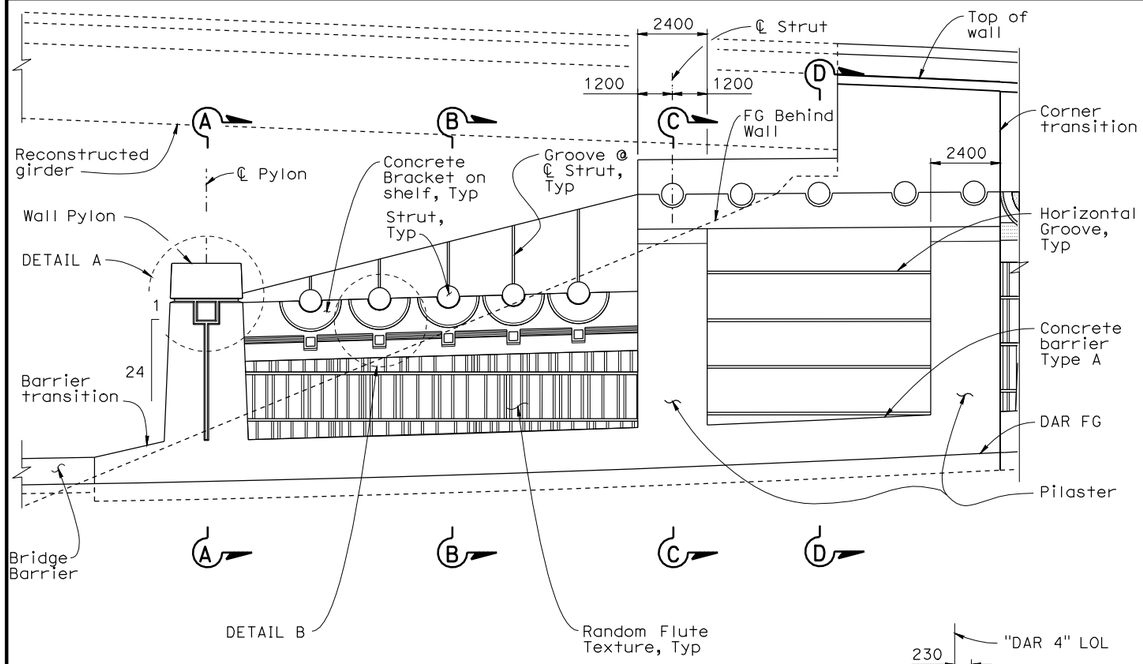

"DAR 4" PART FRONT ELEVATION

1:100

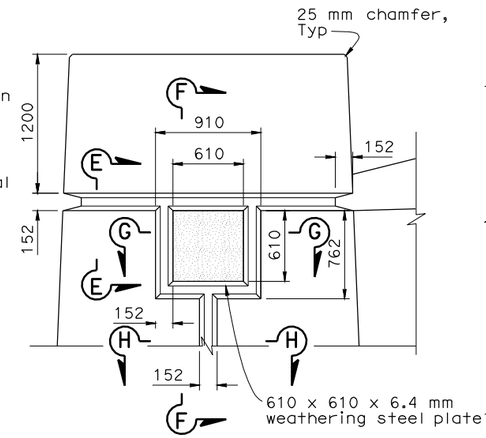

DETAIL A

1:24

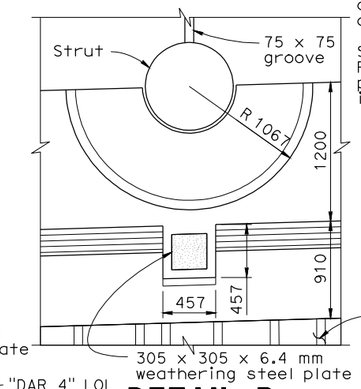

DETAIL B

1:24

GENERAL NOTE

These "STUDY" details are schematic and incomplete and are intended to identify architectural treatment elements and detailing for this project.

See drawings for the Carroll Canyon (DAR) Retaining Walls Bridge No. 57E0075/76)for project Contract No. 11-2T0404 for more information on Details.

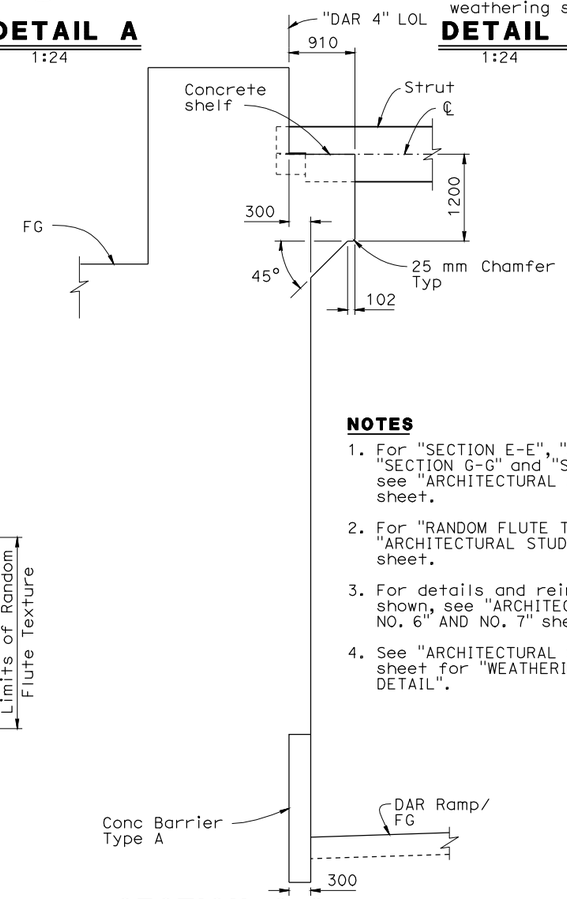

SECTION C-C

1:40

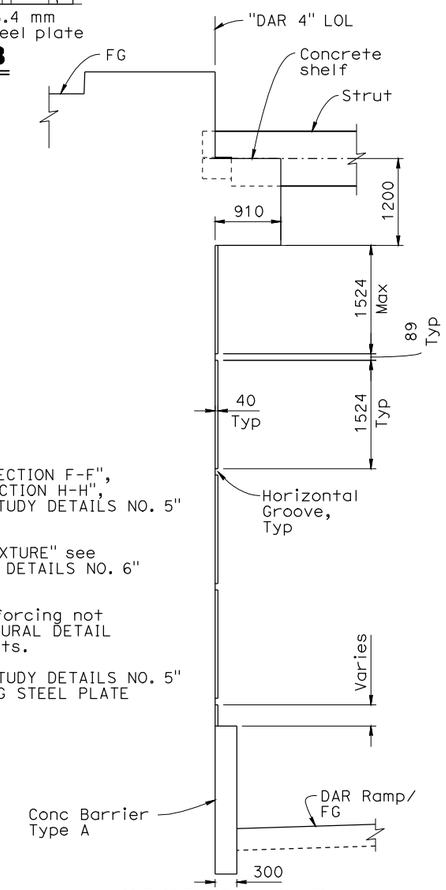

SECTION D-D

1:40

ALL DIMENSIONS ARE IN MILLIMETERS UNLESS OTHERWISE SHOWN

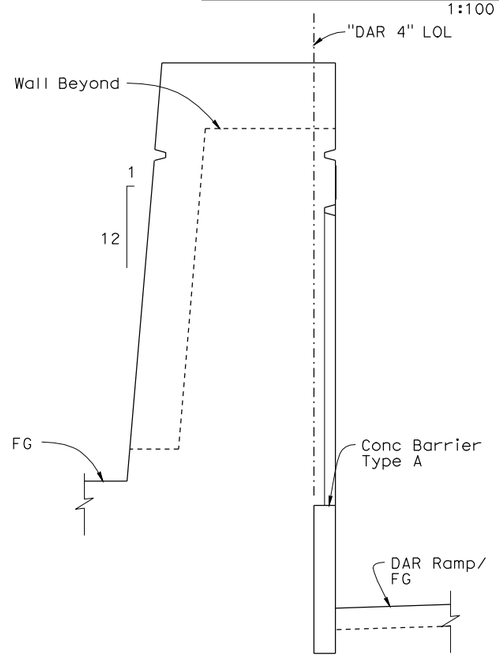

SECTION A-A

1:40

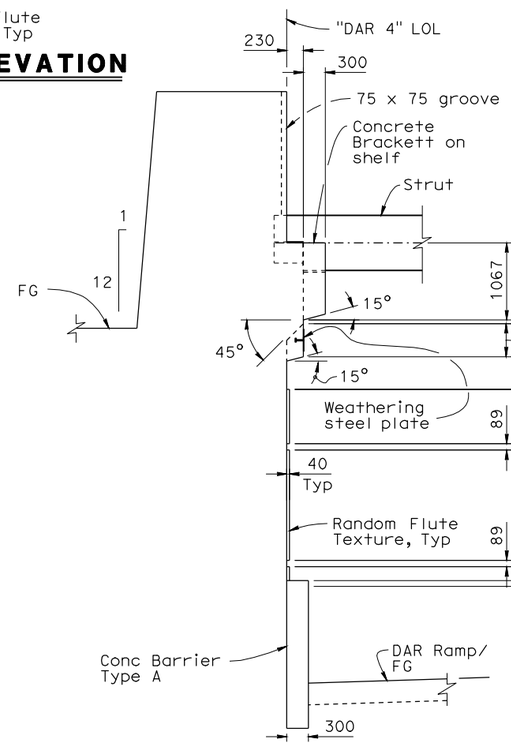

SECTION B-B

1:40

NOTES

1. For "SECTION E-E", "SECTION F-F", "SECTION G-G" and "SECTION H-H", see "ARCHITECTURAL STUDY DETAILS NO. 5" sheet.
2. For "RANDOM FLUTE TEXTURE" see "ARCHITECTURAL STUDY DETAILS NO. 6" sheet.
3. For details and reinforcing not shown, see "ARCHITECTURAL DETAIL NO. 6" AND NO. 7" sheets.
4. See "ARCHITECTURAL STUDY DETAILS NO. 5" sheet for "WEATHERING STEEL PLATE DETAIL".

FOR INFORMATION ONLY

CARROLL CANYON (DAR) RETAINING WALLS

ARCHITECTURAL STUDY DETAILS NO. 4

ORIGINAL SCALE IN MILLIMETERS FOR REDUCED PLANS 0 10 20 30 40 50 60 70 80 90 100

FILE => DAR-Arch DetElevSections-new.dgn

s115810 DATE PLOTTED => 14-JUL-2011 TIME PLOTTED => 12:34

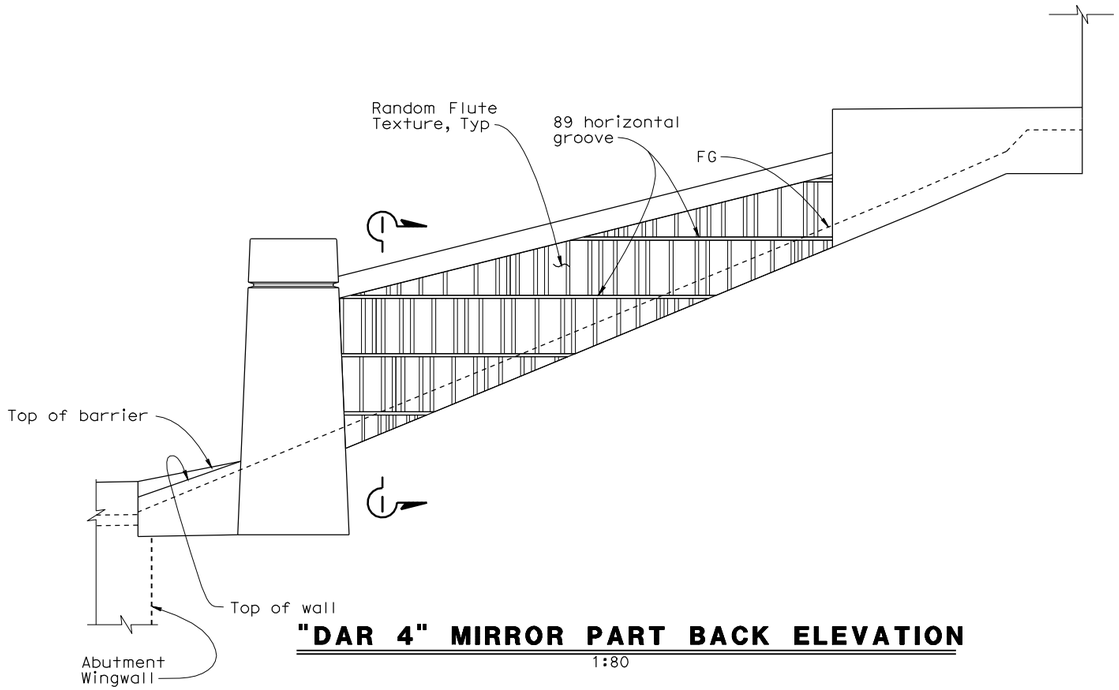

"DAR 4" MIRROR PART BACK ELEVATION
1:80

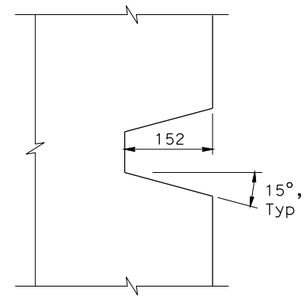

SECTION E-E
1:5

GENERAL NOTE

These "STUDY" details are schematic and incomplete and are intended to identify architectural treatment elements and detailing for this project.

See drawings for the Carroll Canyon (DAR) Retaining Walls Bridge No. 57E0075/76)for project Contract No. 11-2T0404 for more information on Details.

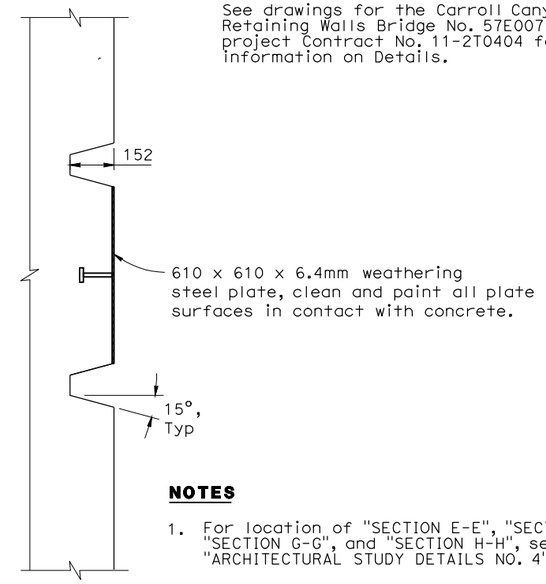

NOTES

1. For location of "SECTION E-E", "SECTION F-F", "SECTION G-G", and "SECTION H-H", see "ARCHITECTURAL STUDY DETAILS NO. 4" sheet.

SECTION F-F
1:10

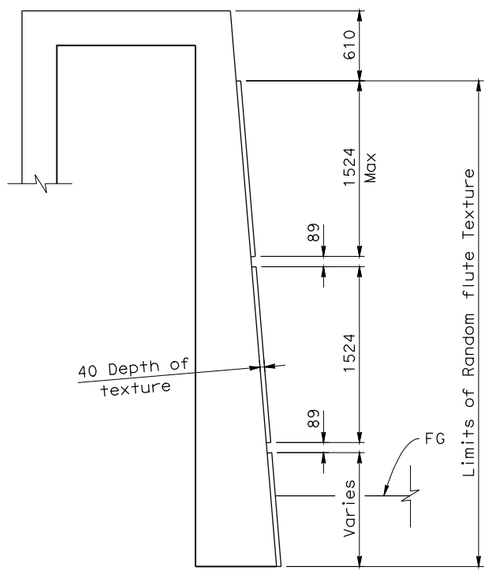

SECTION I-I
1:25

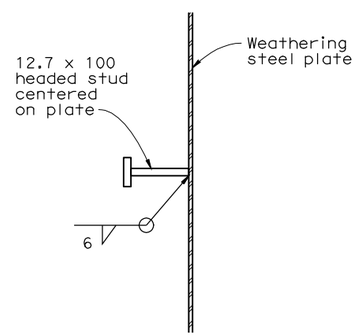

WEATHERING STEEL PLATE DETAIL
No Scale

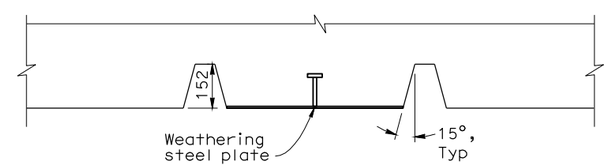

SECTION G-G
1:10

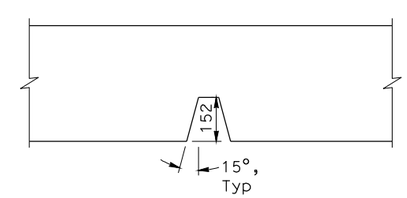

SECTION H-H
1:10

ALL DIMENSIONS ARE IN MILLIMETERS UNLESS OTHERWISE SHOWN

FOR INFORMATION ONLY

CARROLL CANYON (DAR) RETAINING WALLS

ARCHITECTURAL STUDY DETAILS NO. 5

ORIGINAL SCALE IN MILLIMETERS FOR REDUCED PLANS 0 10 20 30 40 50 60 70 80 90 100

FILE => DAR-Arch DetElevSections-new.dgn

s115810 DATE PLOTTED => 14-JUL-2011 TIME PLOTTED => 12:34

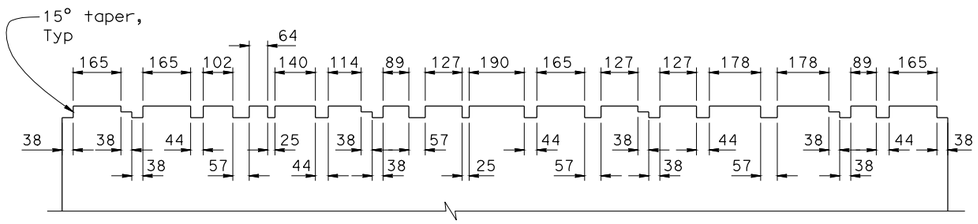

RANDOM FLUTE TEXTURE DETAIL

1:10

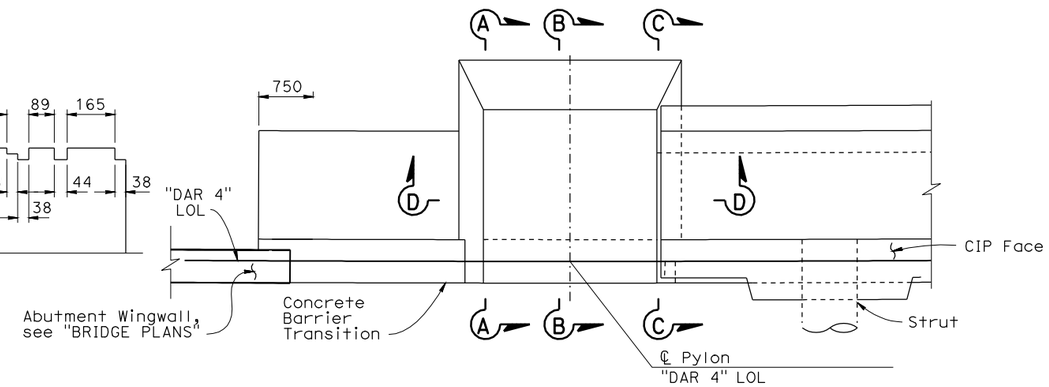

"DAR 4" PYLON PLAN

1:40

GENERAL NOTE

These "STUDY" details are schematic and incomplete and are intended to identify architectural treatment elements and detailing for this project.

See drawings for the Carroll Canyon (DAR) Retaining Walls Bridge No. 57E0075/76)for project Contract No. 11-2T0404 for more information on Details.

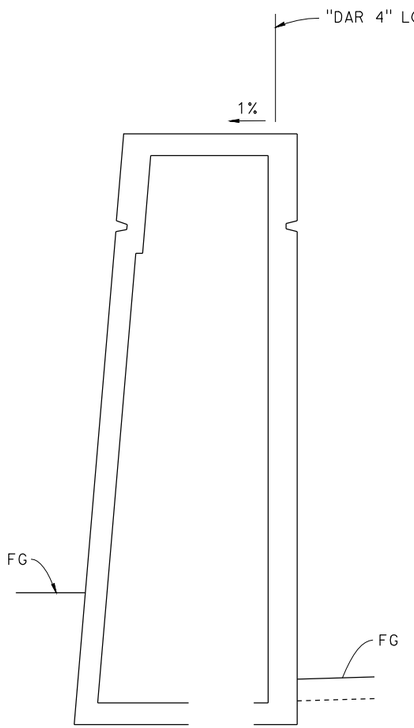

SECTION A-A

1:40

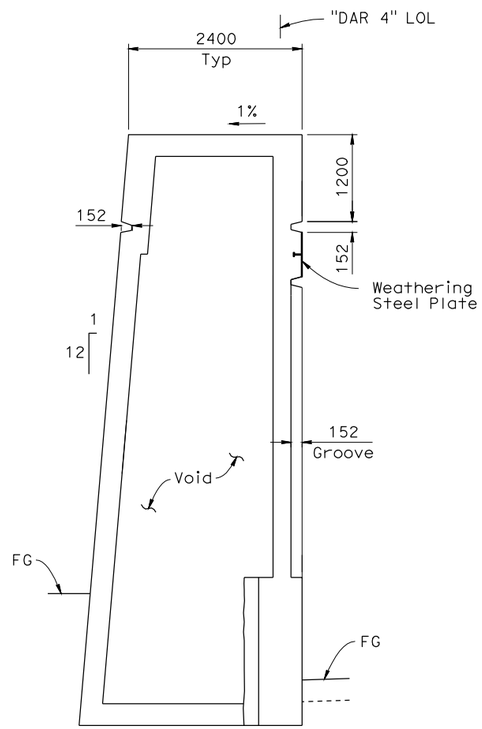

SECTION B-B

1:40

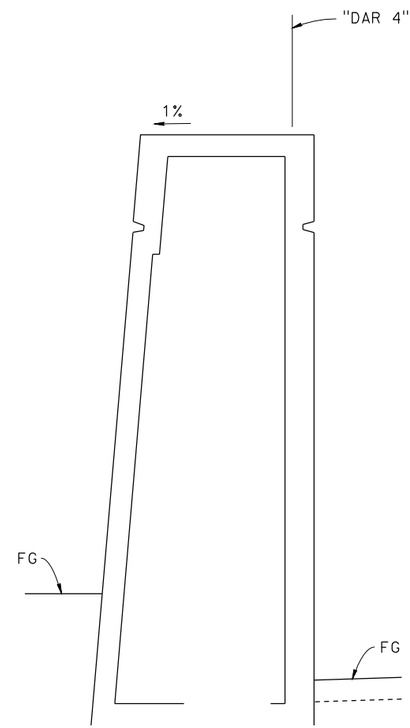

SECTION C-C

1:40

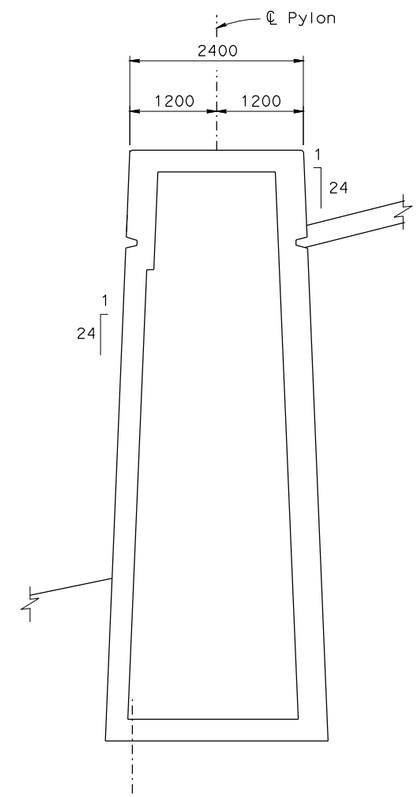

SECTION D-D

1:40

ALL DIMENSIONS ARE IN
MILLIMETERS UNLESS OTHERWISE SHOWN

FOR INFORMATION ONLY

CARROLL CANYON (DAR) RETAINING WALLS

ARCHITECTURAL STUDY DETAILS NO. 6

ORIGINAL SCALE IN MILLIMETERS FOR REDUCED PLANS 0 10 20 30 40 50 60 70 80 90 100

FILE => DAR-Arch DetElevSections-new.dgn

s115810 DATE PLOTTED => 14-JUL-2011 TIME PLOTTED => 12:34

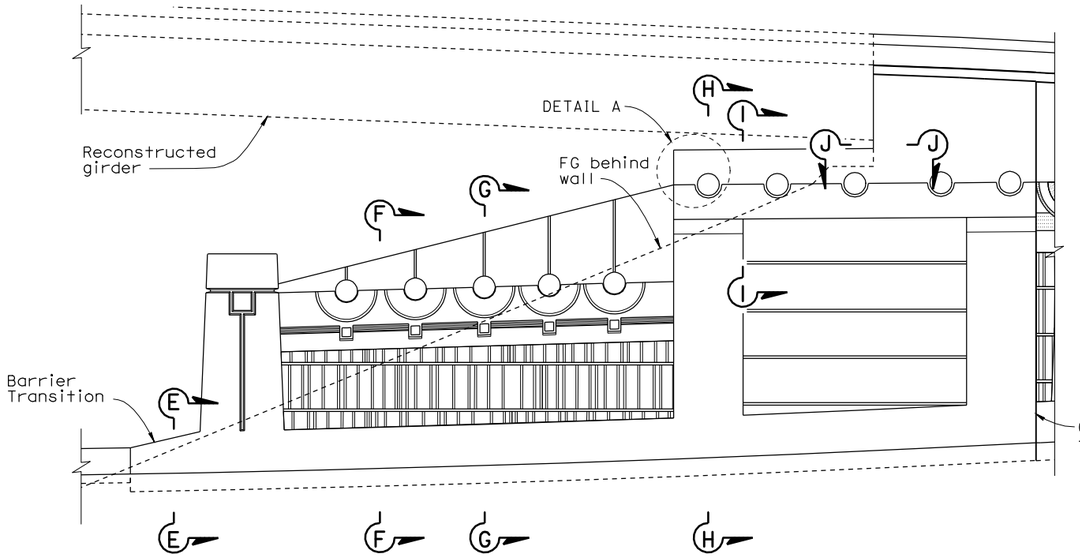

"DAR 4" PART ELEVATION
1:100

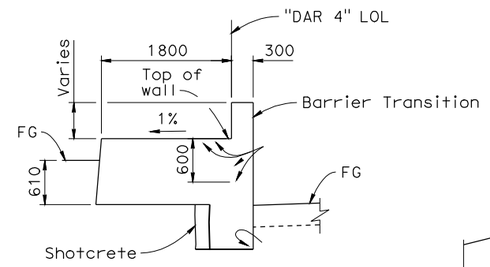

SECTION E-E
1:40

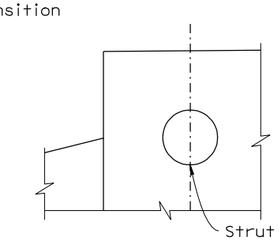

DETAIL A
1:40

GENERAL NOTE

These "STUDY" details are schematic and incomplete and are intended to identify architectural treatment elements and detailing for this project.

See drawings for the Carroll Canyon (DAR) Retaining Walls Bridge No. 57E0075/76)for project Contract No. 11-2T0404 for more information on Details.

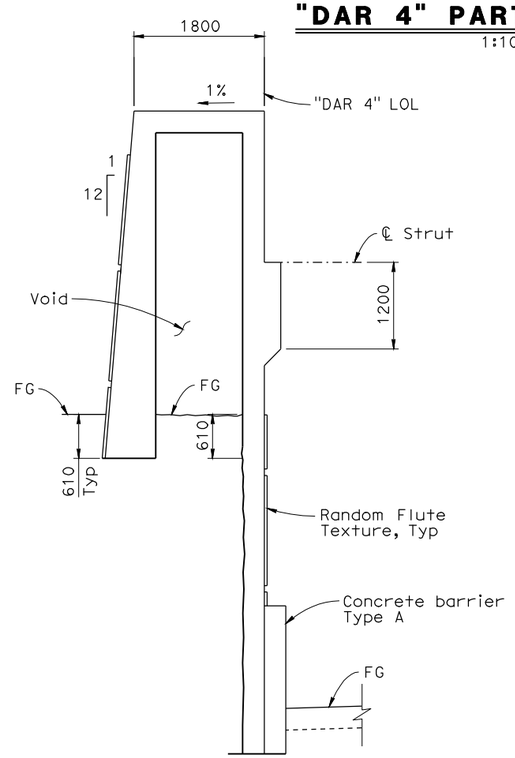

SECTION F-F
1:40

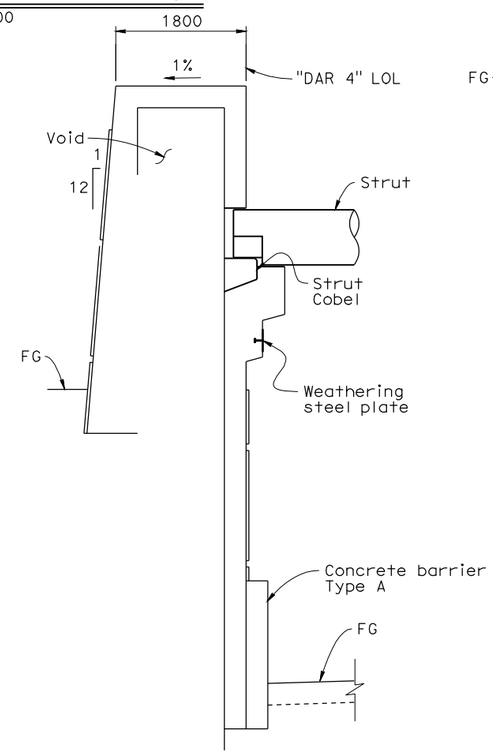

SECTION G-G
1:40

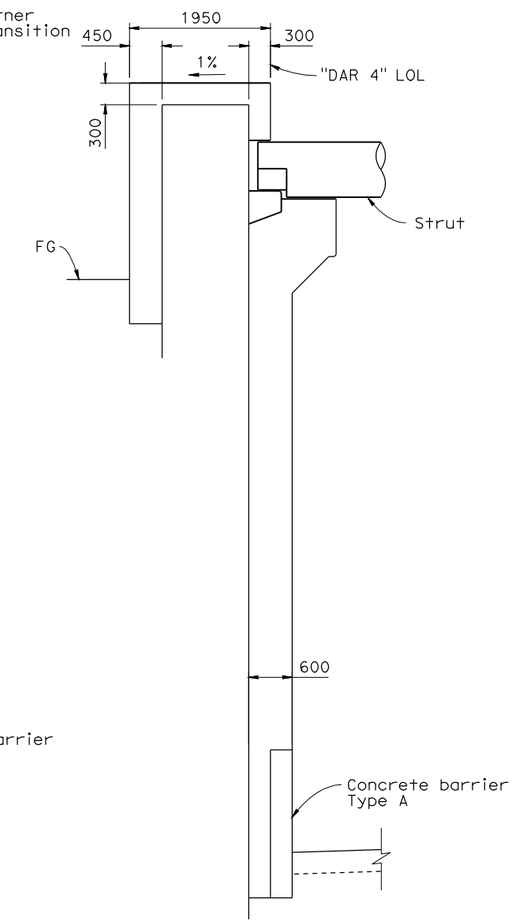

SECTION H-H
1:40

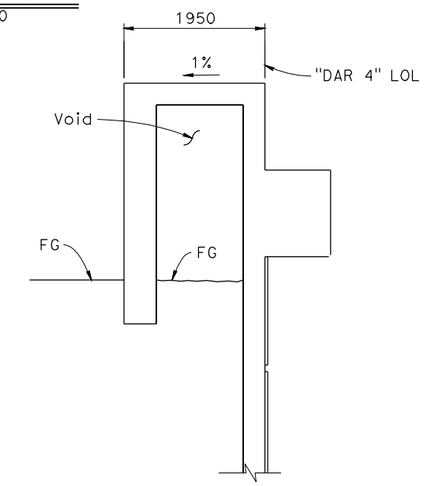

SECTION I-I
1:40

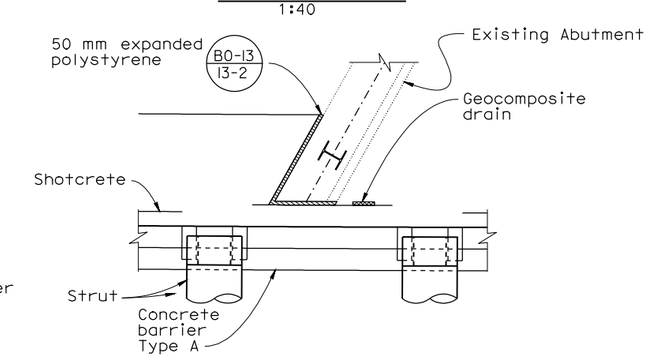

INCOMPLETE SECTION J-J
1:40

ALL DIMENSIONS ARE IN MILLIMETERS UNLESS OTHERWISE SHOWN

FOR INFORMATION ONLY

CARROLL CANYON (DAR) RETAINING WALLS

ARCHITECTURAL STUDY DETAILS NO. 7

ORIGINAL SCALE IN MILLIMETERS FOR REDUCED PLANS 0 10 20 30 40 50 60 70 80 90 100

s115810 DATE PLOTTED => 14-JUL-2011 TIME PLOTTED => 12:35

FILE => DAR-Arch DetElevSections-new.dgn

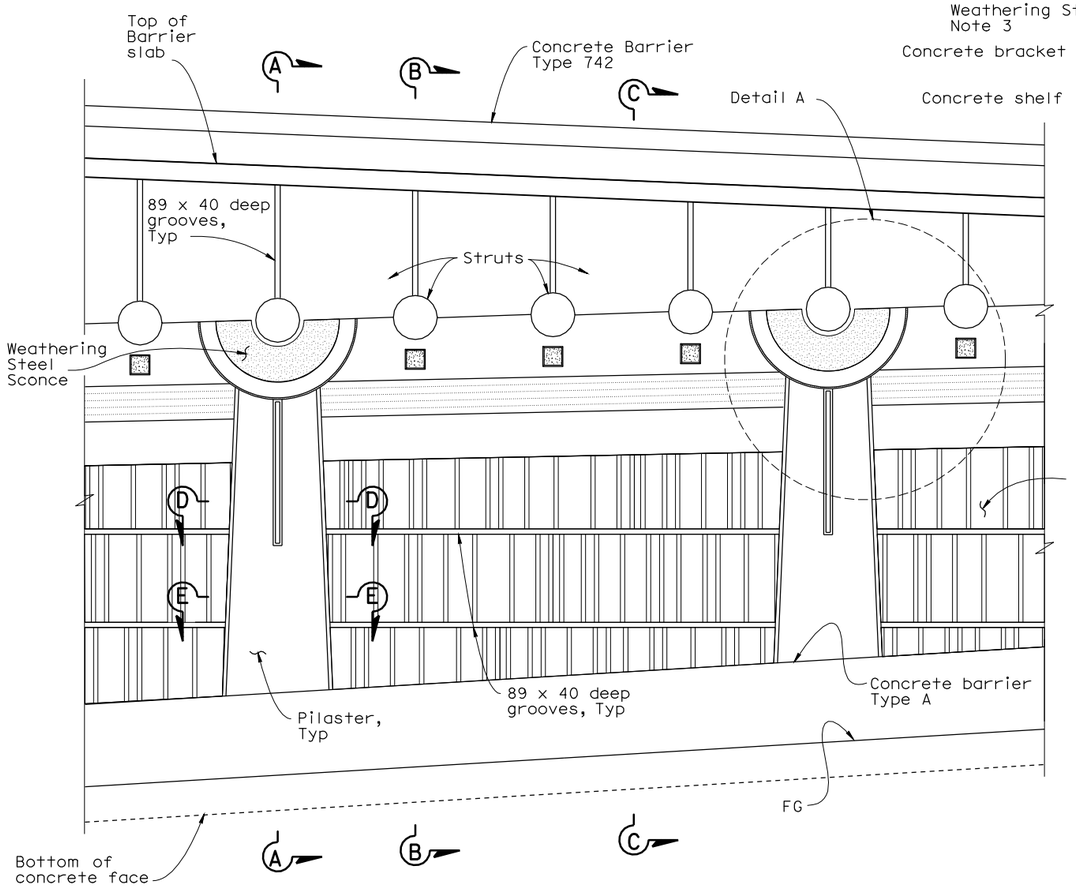

"DAR 4" WALL PART ELEVATION

1:50

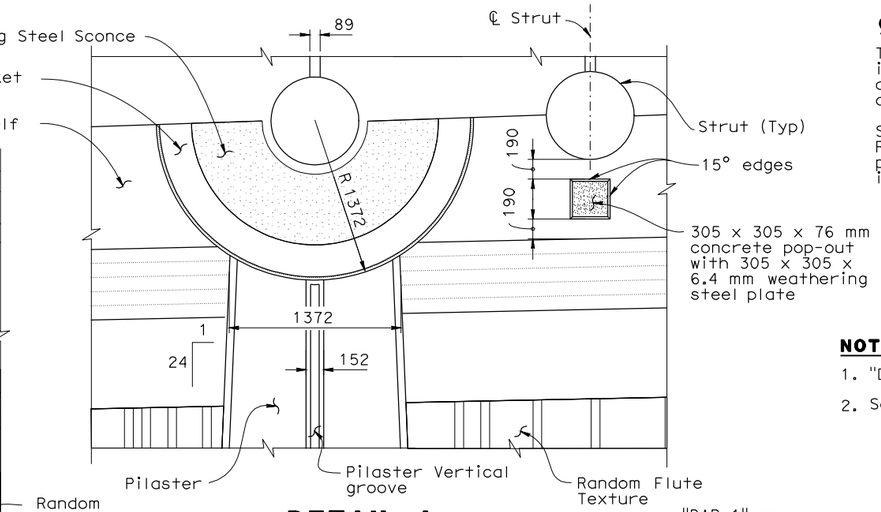

DETAIL A

1:25

GENERAL NOTE

These "STUDY" details are schematic and incomplete and are intended to identify architectural treatment elements and detailing for this project.

See drawings for the Carroll Canyon (DAR) Retaining Walls Bridge No. 57E0075/76)for project Contract No. 11-2T0404 for more information on Details.

NOTES

1. "DAR 4" wall shown, "DAR 1" wall similar
2. See "WEATHERING STEEL SCONCE" sheet

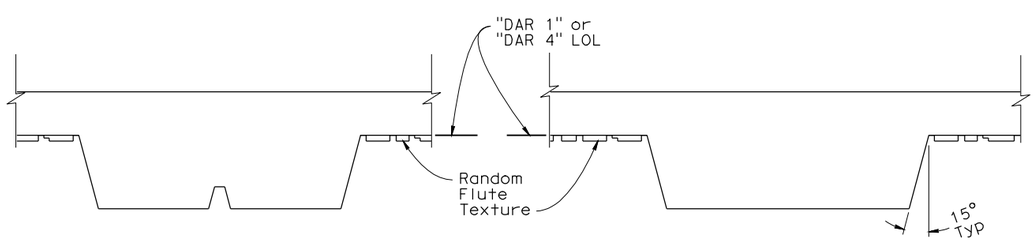

SECTION D-D

1:20

SECTION E-E

1:20

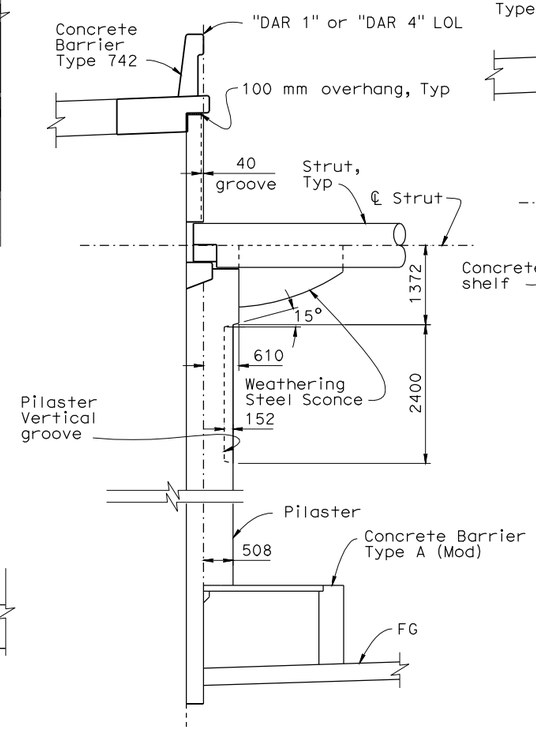

SECTION A-A

1:50

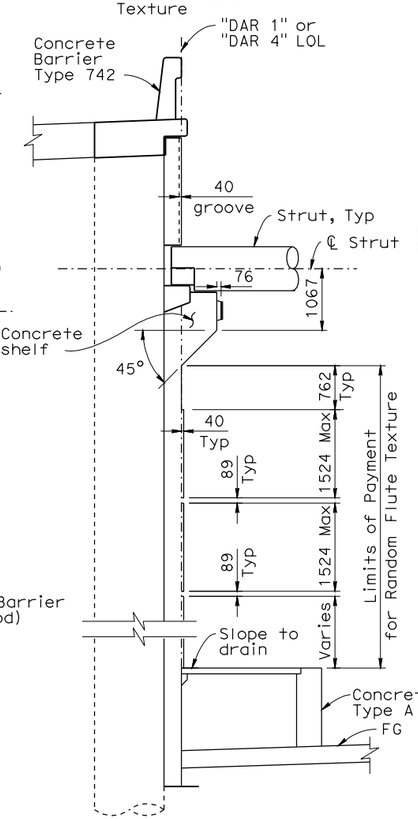

SECTION B-B

1:50

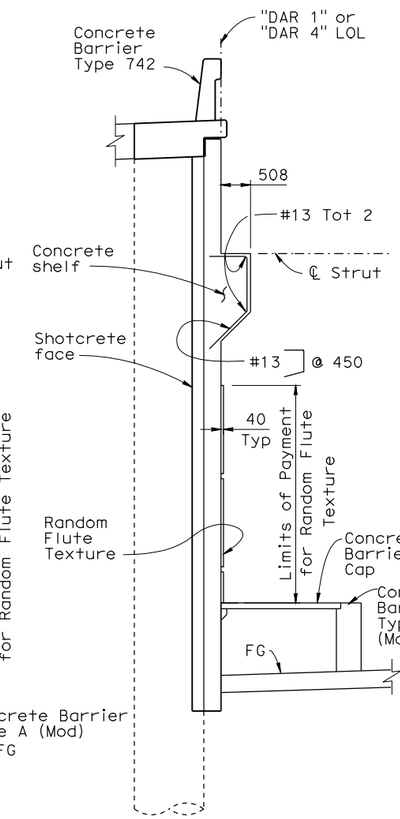

SECTION C-C

1:50

ALL DIMENSIONS ARE IN MILLIMETERS UNLESS OTHERWISE SHOWN

FOR INFORMATION ONLY

CARROLL CANYON (DAR) RETAINING WALLS

ARCHITECTURAL STUDY DETAILS NO. 8

ORIGINAL SCALE IN MILLIMETERS FOR REDUCED PLANS 0 10 20 30 40 50 60 70 80 90 100

FILE => DAR-Arch DetElevSections-new.dgn

s115810 DATE PLOTTED => 14-JUL-2011 TIME PLOTTED => 12:35

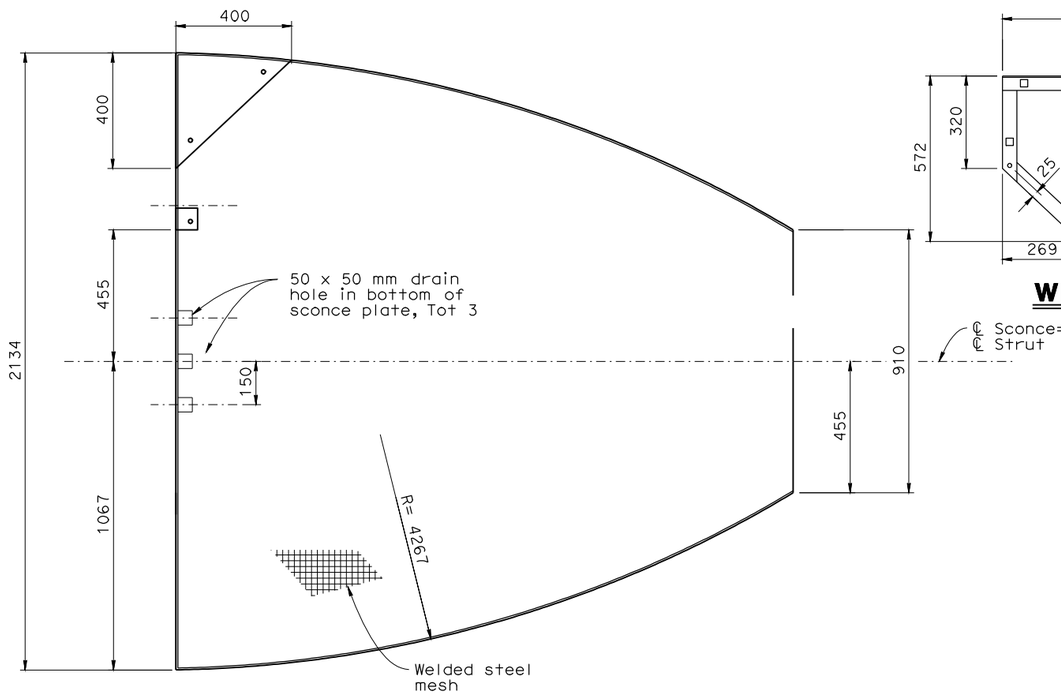

PLAN

1:10 (Note 3)

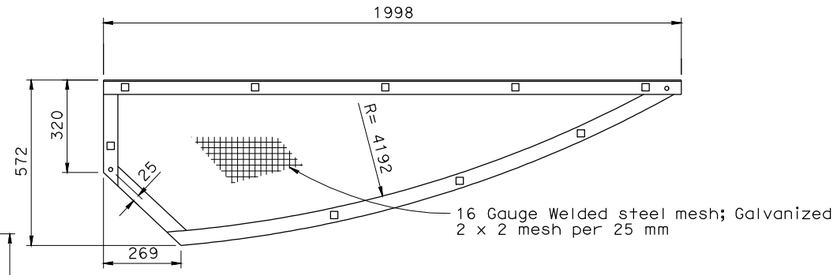

WELDED STEEL MESH COVER

1:10

GENERAL NOTE

These "STUDY" details are schematic. See contract drawings for the Carroll Canyon (DAR) Retaining Walls Bridge No. 57E0075/76)for project Contract No. 11-2T0404 for more information on Weathering Steel Sconce Details.

NOTES

1. All steel plates shall be weathering steel.
2. All bolts, nuts, washers and screws shall be galvanized.
3. One cover shown for clarity, two covers per sconce. Install cover on sconce after sconce is attached to concrete bracket.

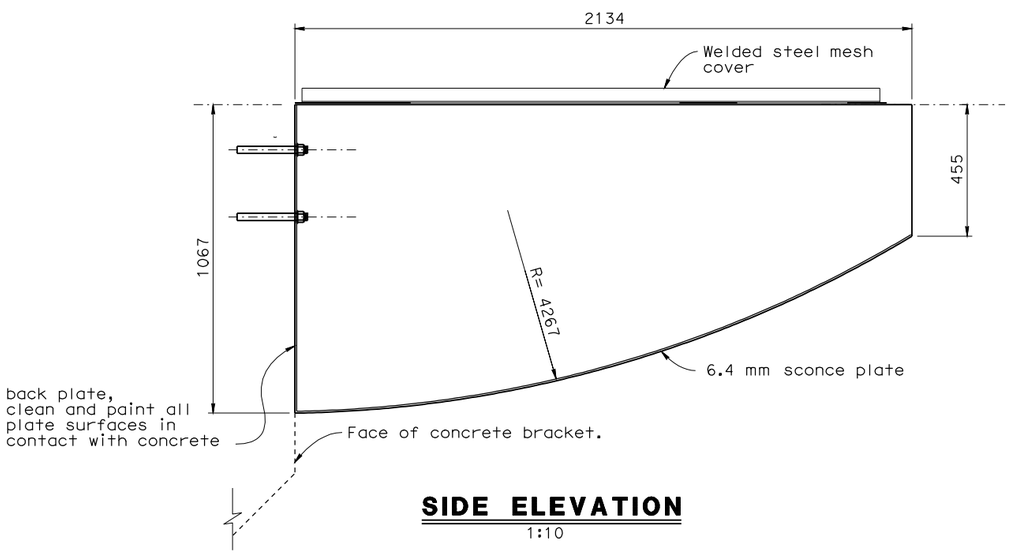

SIDE ELEVATION

1:10

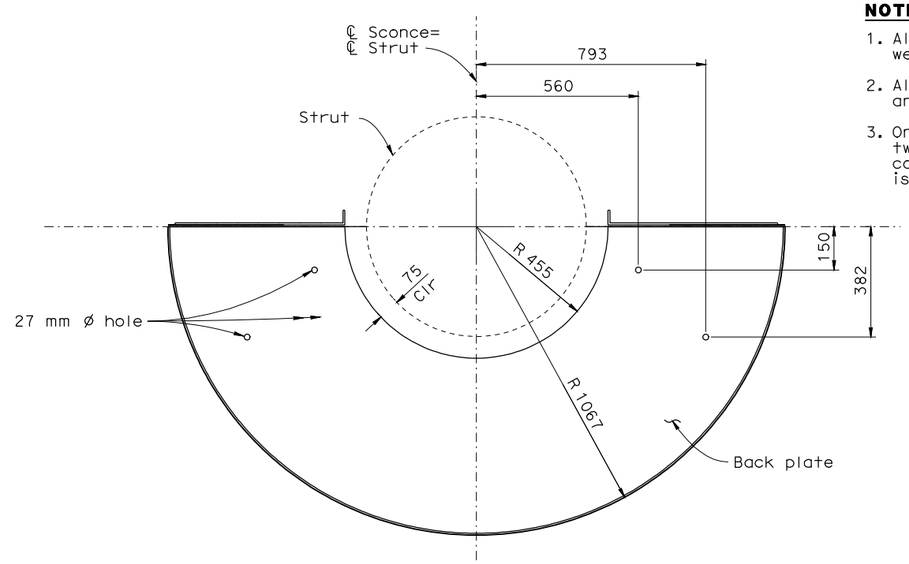

FRONT ELEVATION

1:10

N.T.S.

BRIDGE NO.

ALL DIMENSIONS ARE IN MILLIMETERS UNLESS OTHERWISE SHOWN

FOR INFORMATION ONLY

CARROLL CANYON (DAR) RETAINING WALLS

WEATHERING STEEL SCONCE

ORIGINAL SCALE IN MILLIMETERS FOR REDUCED PLANS 0 10 20 30 40 50 60 70 80 90 100

FILE => DAR-Arch DetElevSections-new.dgn

DATE PLOTTED => 01-NOV-2011 TIME PLOTTED => 12:12

NOTES

1. For SECTION "A-A", "B-B" and "C-C", see "TYPE A BARRIER DETAILS NO. 2" sheet.
2. Barrier cap support, see "DETAIL A" on "TYPE A BARRIER DETAIL NO. 2" sheet.

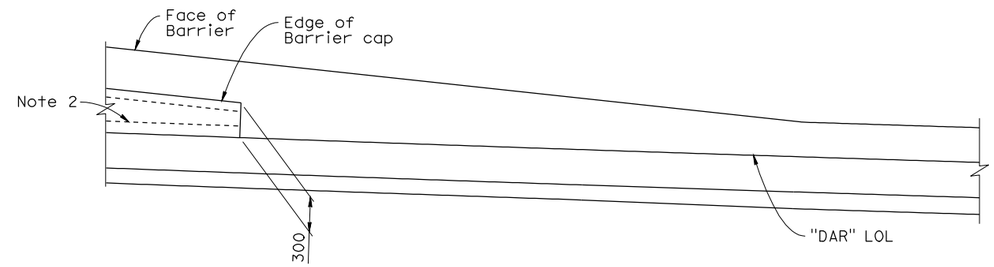

DETAIL A
N.T.S.

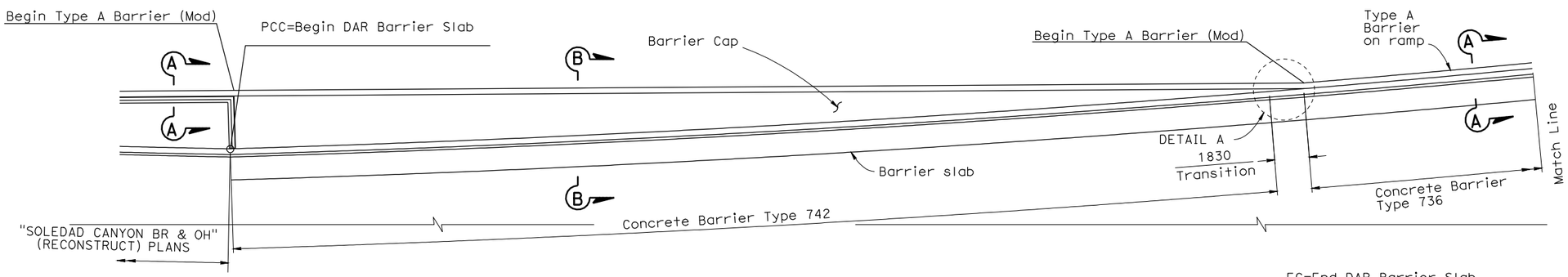

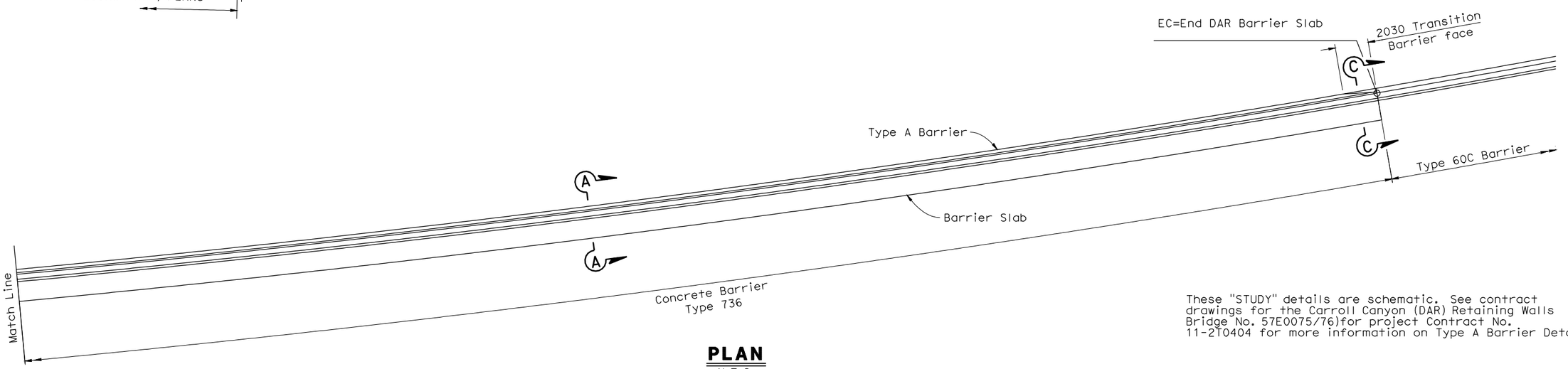

PLAN
N.T.S.

These "STUDY" details are schematic. See contract drawings for the Carroll Canyon (DAR) Retaining Walls Bridge No. 57E0075/76)for project Contract No. 11-2T0404 for more information on Type A Barrier Details.

BRIDGE NO.

ALL DIMENSIONS ARE IN MILLIMETERS UNLESS OTHERWISE SHOWN

FOR INFORMATION ONLY

CARROLL CANYON (DAR) RETAINING WALLS

TYPE A BARRIER DETAILS NO. 1

ORIGINAL SCALE IN MILLIMETERS FOR REDUCED PLANS 0 10 20 30 40 50 60 70 80 90 100

FILE => DAR-Arch DetElevSections-new.dgn

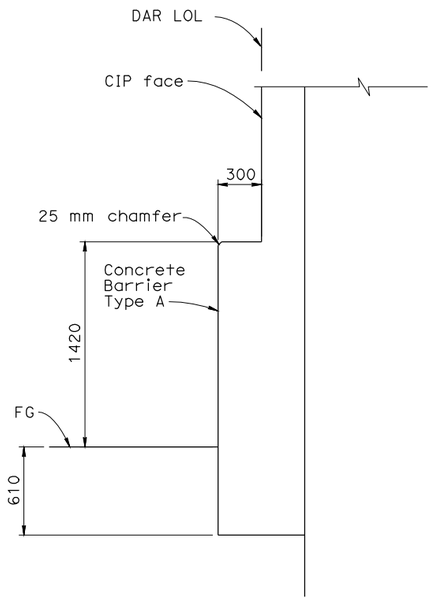

(Note 1)

SECTION A-A

1:20

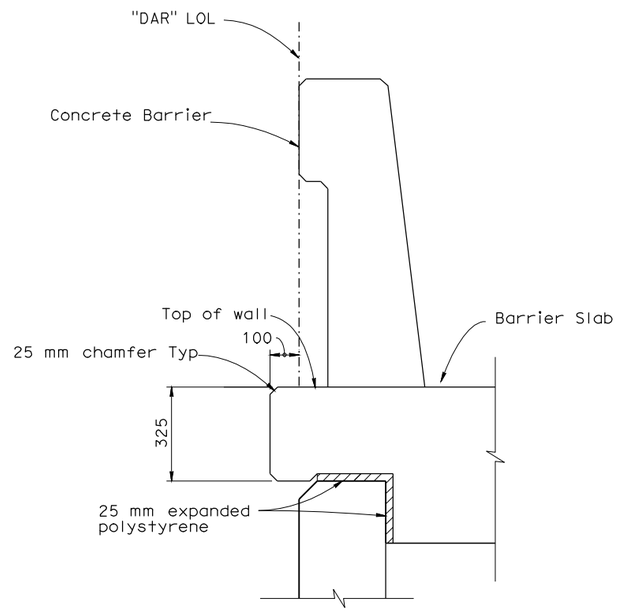

BARRIER SLAB OVERHANG

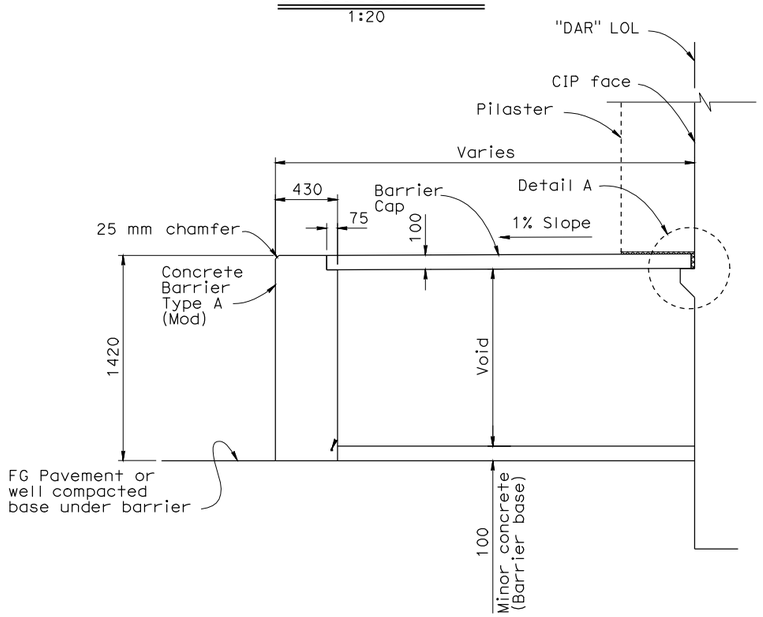

SECTION B-B

1:20

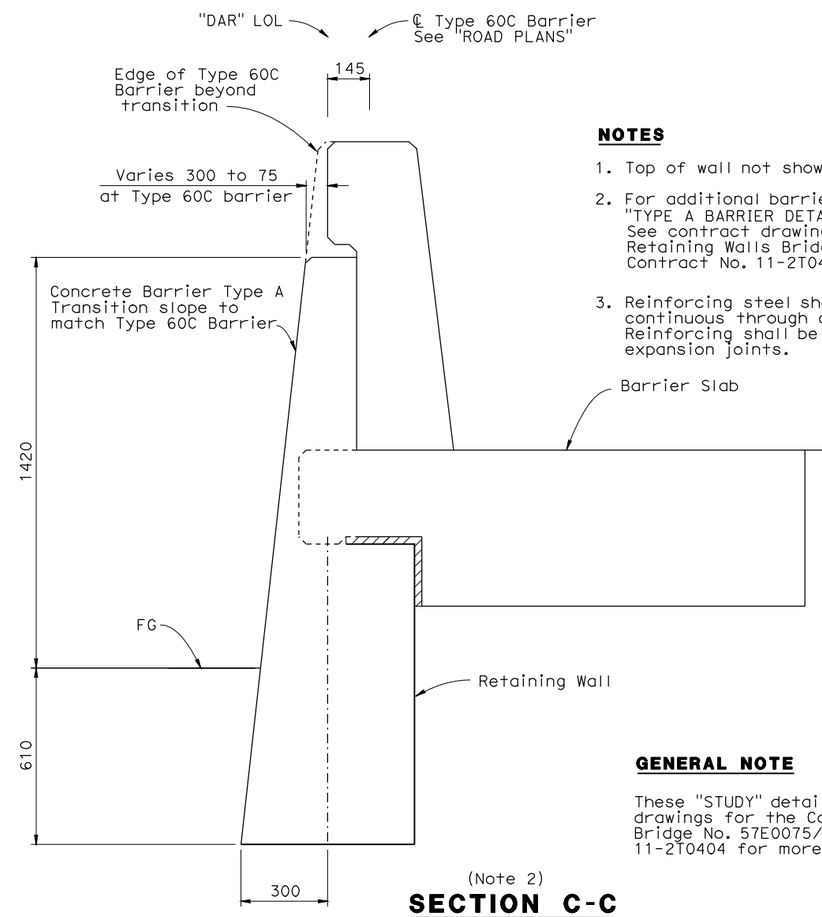

(Note 2)

SECTION C-C

1:10

BRIDGE NO.

NOTES

1. Top of wall not shown.
2. For additional barrier transition details, see "TYPE A BARRIER DETAILS NO. 3" sheet. See contract drawings for the Carroll Canyon (DAR) Retaining Walls Bridge No. 57E0075/76)for project Contract No. 11-2T0404.
3. Reinforcing steel shall extend continuous through construction joints. Reinforcing shall be discontinuous at expansion joints.

GENERAL NOTE

These "STUDY" details are schematic. See contract drawings for the Carroll Canyon (DAR) Retaining Walls Bridge No. 57E0075/76)for project Contract No. 11-2T0404 for more information on Type A Barrier Details.

ALL DIMENSIONS ARE IN
MILLIMETERS UNLESS OTHERWISE SHOWN

FOR INFORMATION ONLY

CARROLL CANYON (DAR) RETAINING WALLS

TYPE A BARRIER DETAILS NO. 2

ORIGINAL SCALE IN MILLIMETERS
FOR REDUCED PLANS 0 10 20 30 40 50 60 70 80 90 100

FILE => DAR-Arch DetElevSections-new.dgn

GENERAL NOTE

These "STUDY" details are schematic and incomplete and are intended to identify architectural treatment elements and detailing for this project.

See drawings for Retaining Wall No.438L for project Contract No. 11-2t0404 for more information on Details.

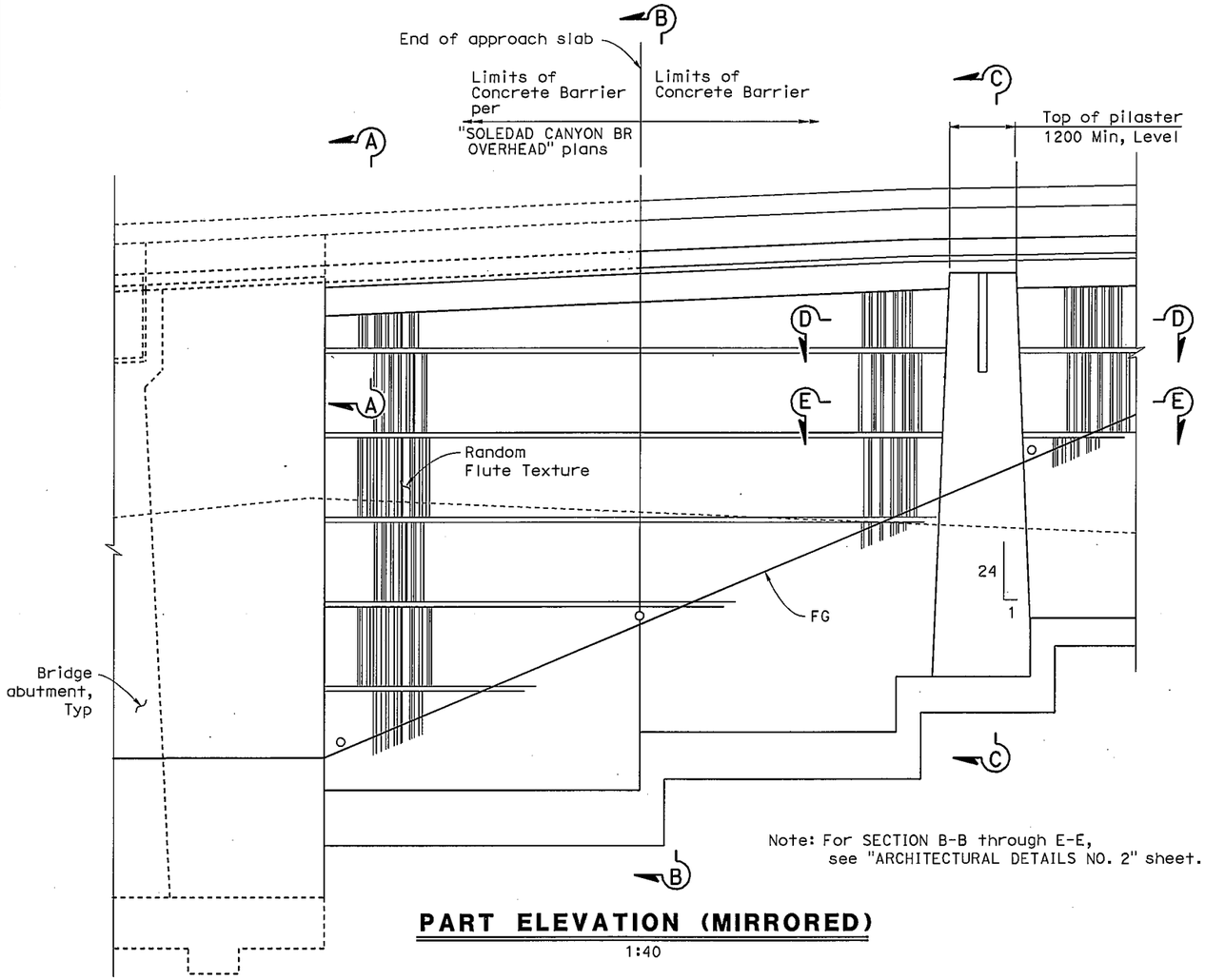

PART ELEVATION (MIRRORED)

1:40

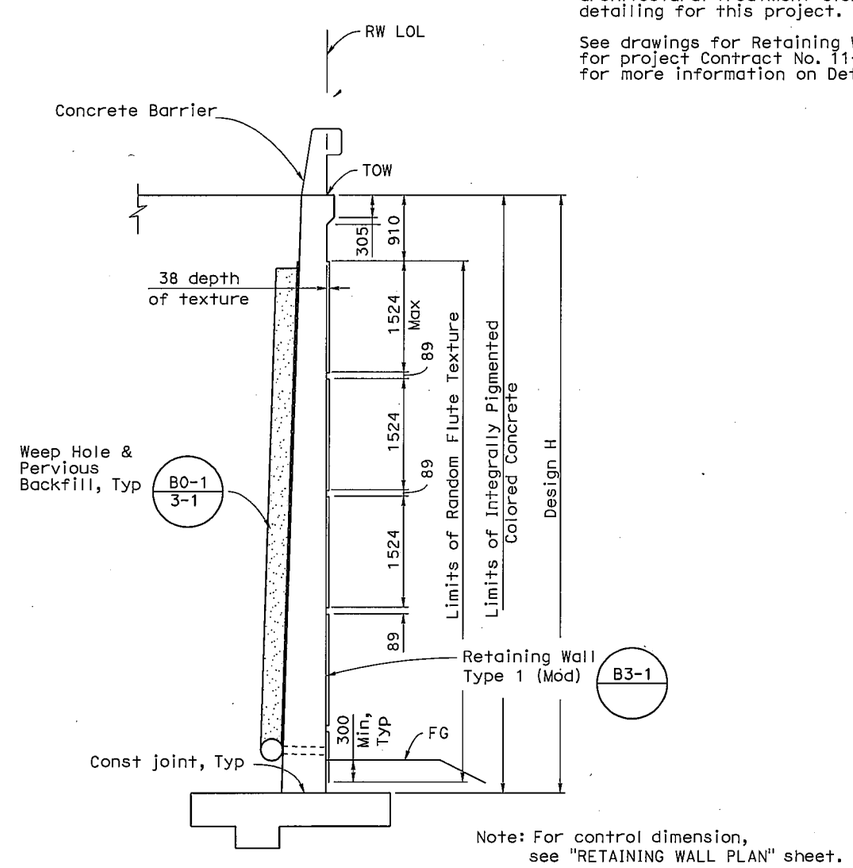

TYPICAL SECTION

N.T.S

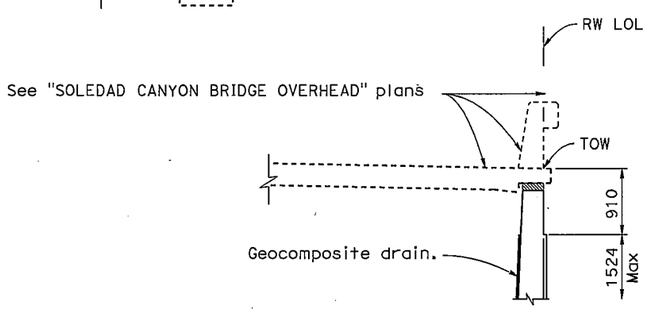

SECTION A-A

1:40

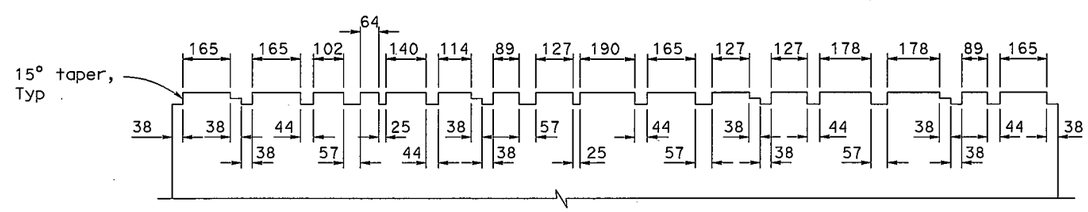

RANDOM FLUTE TEXTURE DETAIL

1:10

ALL DIMENSIONS ARE IN MILLIMETERS UNLESS OTHERWISE SHOWN

FOR INFORMATION ONLY

SOLEDAD CANYON BRIDGE OH RETAINING WALLS

ARCHITECTURAL STUDY DETAILS No. 1

ORIGINAL SCALE IN MILLIMETERS FOR REDUCED PLANS 0 10 20 30 40 50 60 70 80 90 100

FILE => DAR-Arch DetElevSections-new.dgn

s115810 DATE PLOTTED => 28-JUL-2011 TIME PLOTTED => 12:41

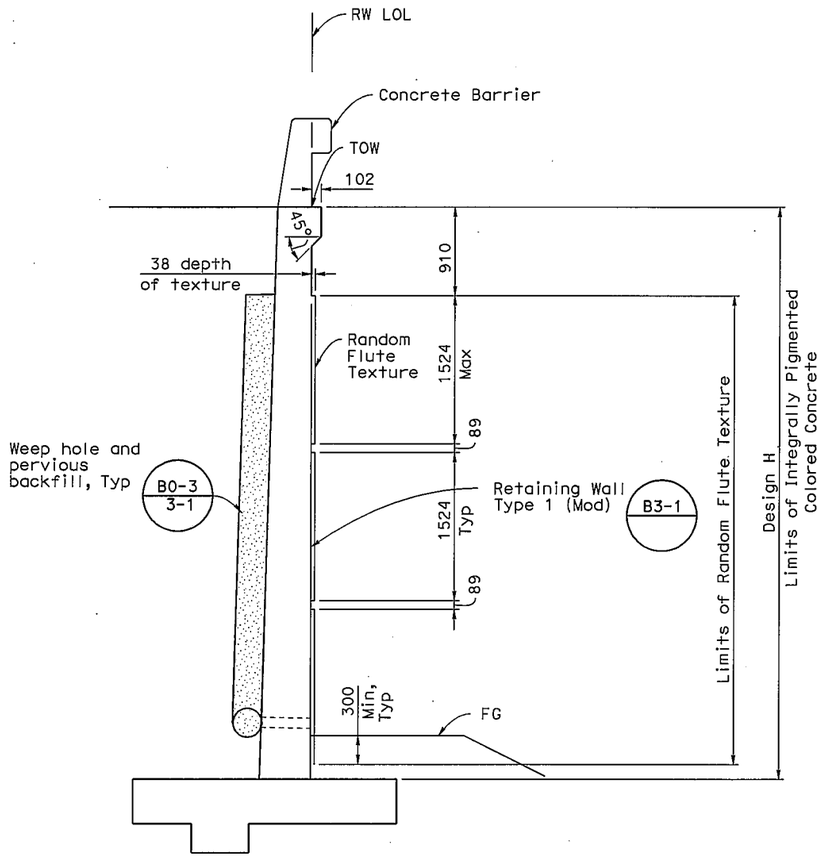

SECTION B-B

1:30

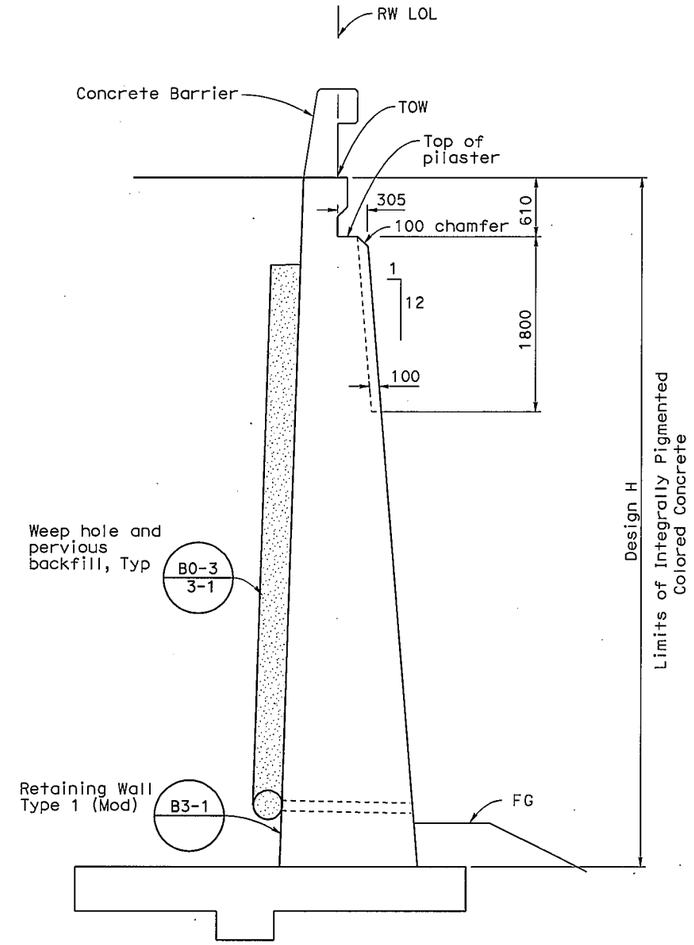

SECTION C-C

1:30

GENERAL NOTE

These "STUDY" details are schematic and incomplete and are intended to identify architectural treatment elements and detailing for this project.

See drawings for Retaining Wall No.438L for project Contract No. 11-2t0404 for more information on Details.

NOTES:

1. Expansion joint to follow edge of pilaster.
2. For details not shown, see B3-1.

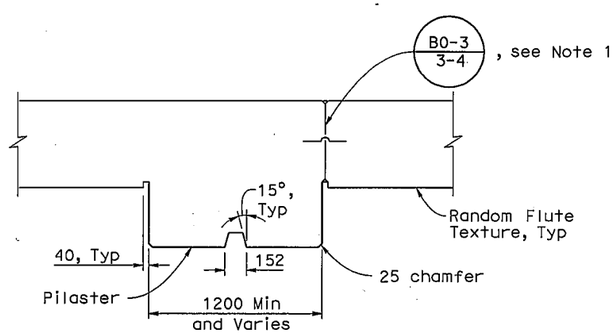

SECTION D-D

1:20

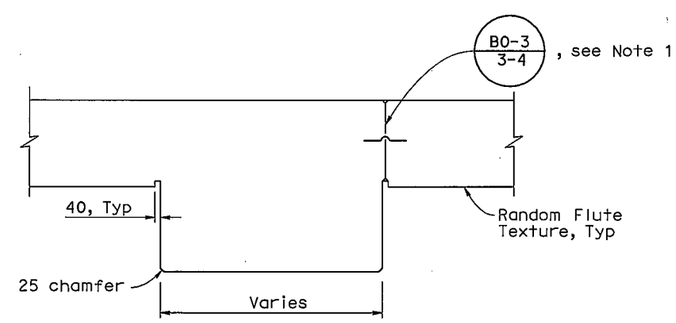

SECTION E-E

1:20

ALL DIMENSIONS ARE IN
MILLIMETERS UNLESS OTHERWISE SHOWN

FOR INFORMATION ONLY

SOLEDAD CANYON BRIDGE OH RETAINING WALLS

ARCHITECTURAL STUDY DETAILS No. 2

ORIGINAL SCALE IN MILLIMETERS FOR REDUCED PLANS 0 10 20 30 40 50 60 70 80 90 100

FILE => DAR-Arch DetElevSections-new.dgn

s115810 DATE PLOTTED => 28-JUL-2011 TIME PLOTTED => 12:41

GENERAL NOTE

These "STUDY" details are schematic and incomplete and are intended to identify architectural treatment elements and detailing for this project.

See drawings for Retaining Wall No.606 Lomas Santa Fe Drive (Widen) for project Contract No. 11-2358U4 for more information on Details.

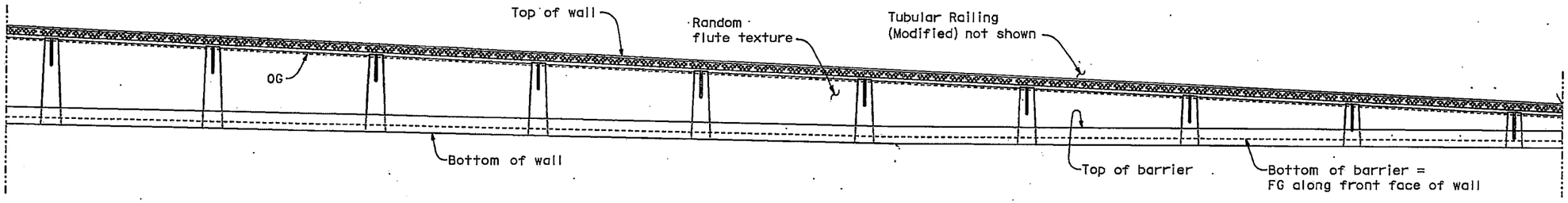

ELEVATION

ALL DIMENSIONS ARE IN MILLIMETERS UNLESS OTHERWISE SHOWN

FOR INFORMATION ONLY

BRIDGE NO.	RETAINING WALL STUDY
	ARCHITECTURAL DETAILS No.1

ORIGINAL SCALE IN MILLIMETERS FOR REDUCED PLANS 0 10 20 30 40 50 60 70 80 90 100

FILE => DAR-Arch DetElevSections-new.dgn

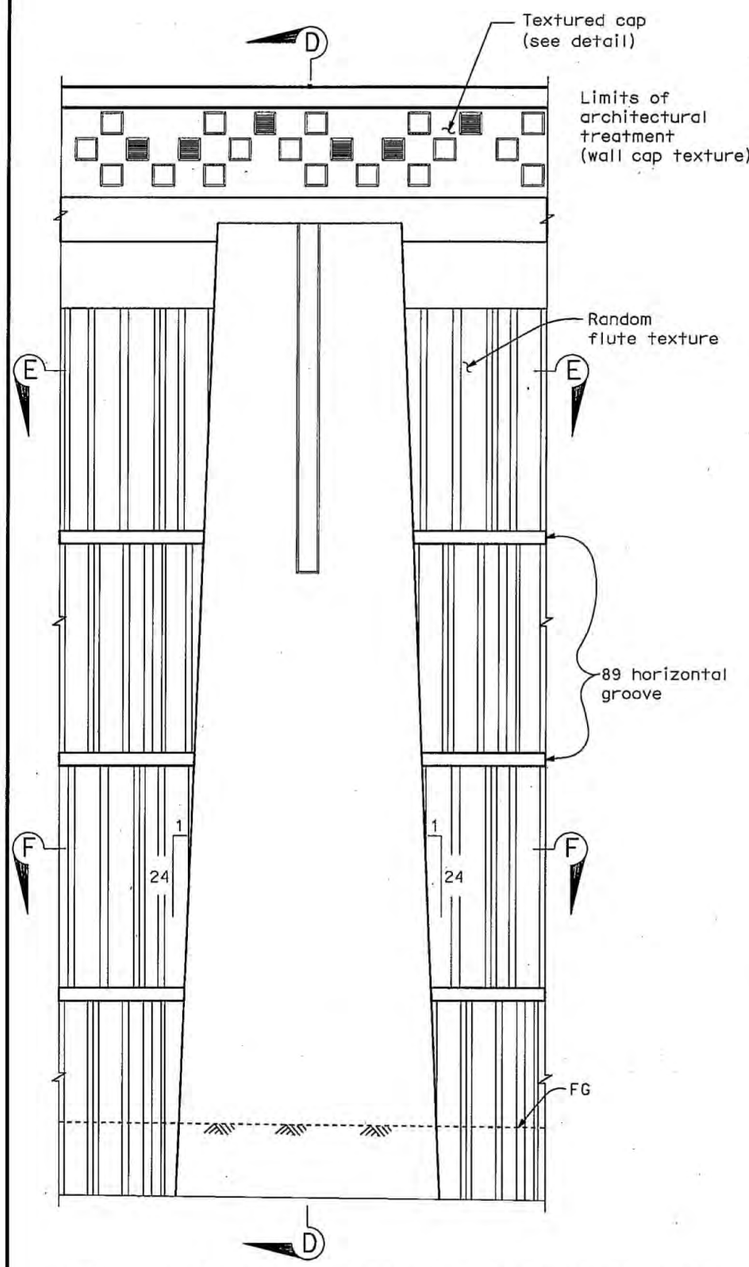

ARCHITECTURAL DETAILS - SOIL NAIL WALL

No Scale

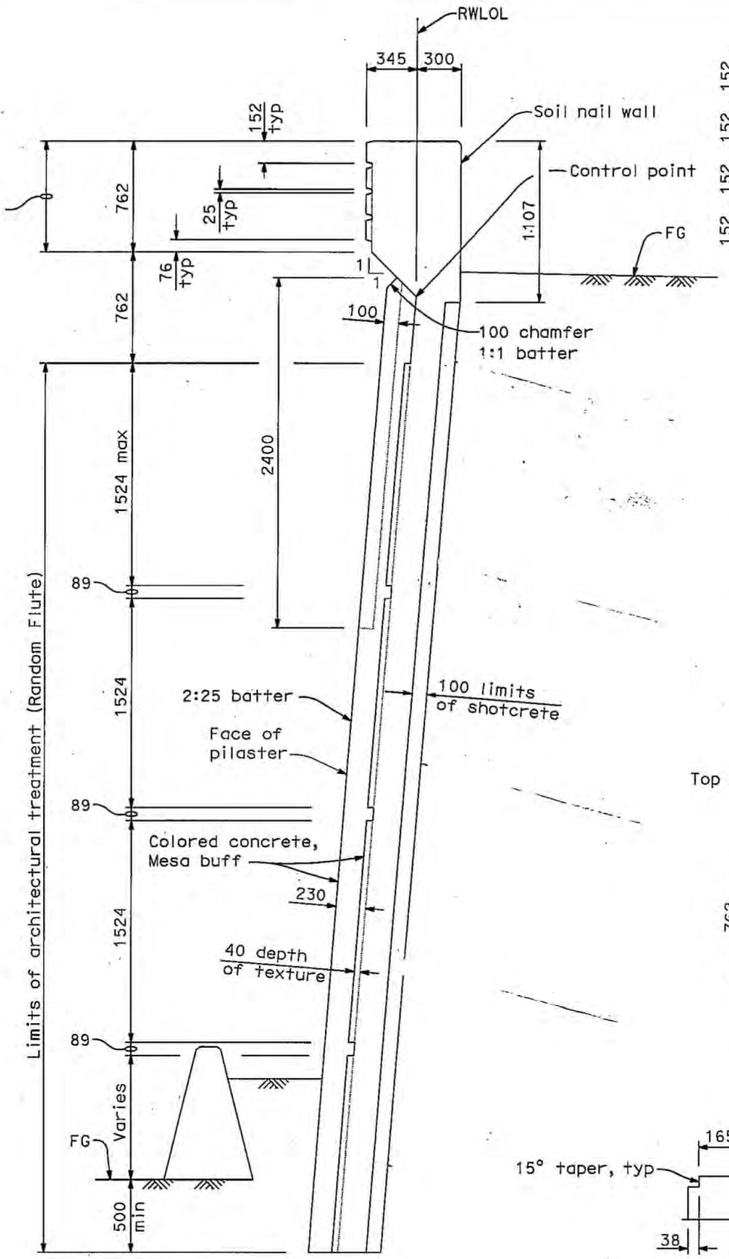

SECTION D-D

No Scale

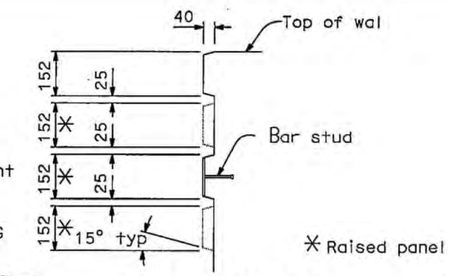

SECTION C-C

No Scale

GENERAL NOTE

These "STUDY" details are schematic and incomplete and are intended to identify architectural treatment elements and detailing for this project.

See drawings for Retaining Wall No.606 Lomas Santa Fe Drive (Widen) for project Contract No. 11-2358U4 for more information on Details.

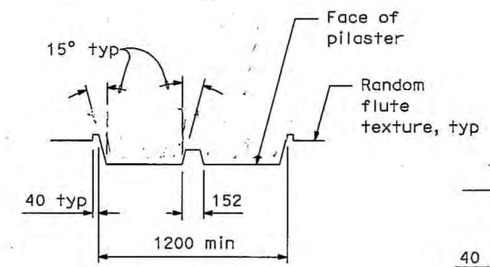

SECTION E-E

No Scale

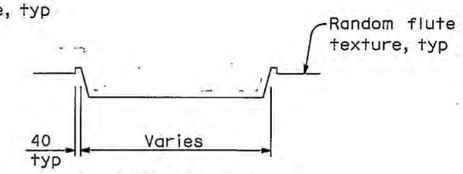

SECTION F-F

No Scale

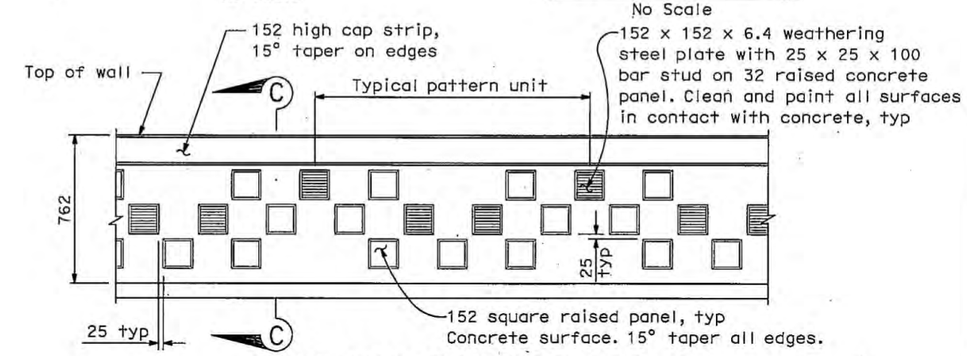

WALL CAP TEXTURE DETAIL

No Scale

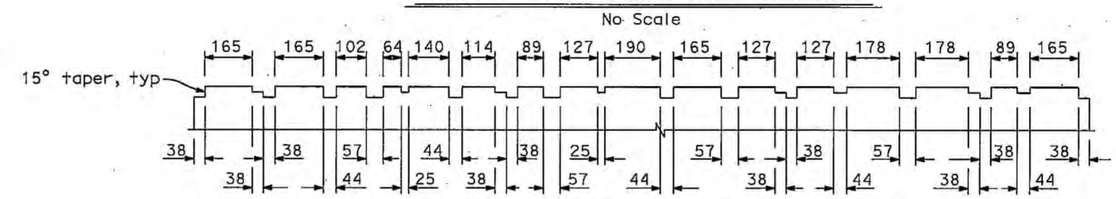

RANDOM FLUTE TEXTURE DETAIL

No Scale

Note:
For reinforcement and details not shown, see "Soil Nail Retaining Wall Details"sheets.

ALL DIMENSIONS ARE IN MILLIMETERS UNLESS OTHERWISE SHOWN

FOR INFORMATION ONLY

BRIDGE NO.	RETAINING WALL STUDY
	ARCHITECTURAL DETAILS No.2

ORIGINAL SCALE IN MILLIMETERS FOR REDUCED PLANS 0 10 20 30 40 50 60 70 80 90 100

FILE => DAR-Arch DetElevSections-new.dgn

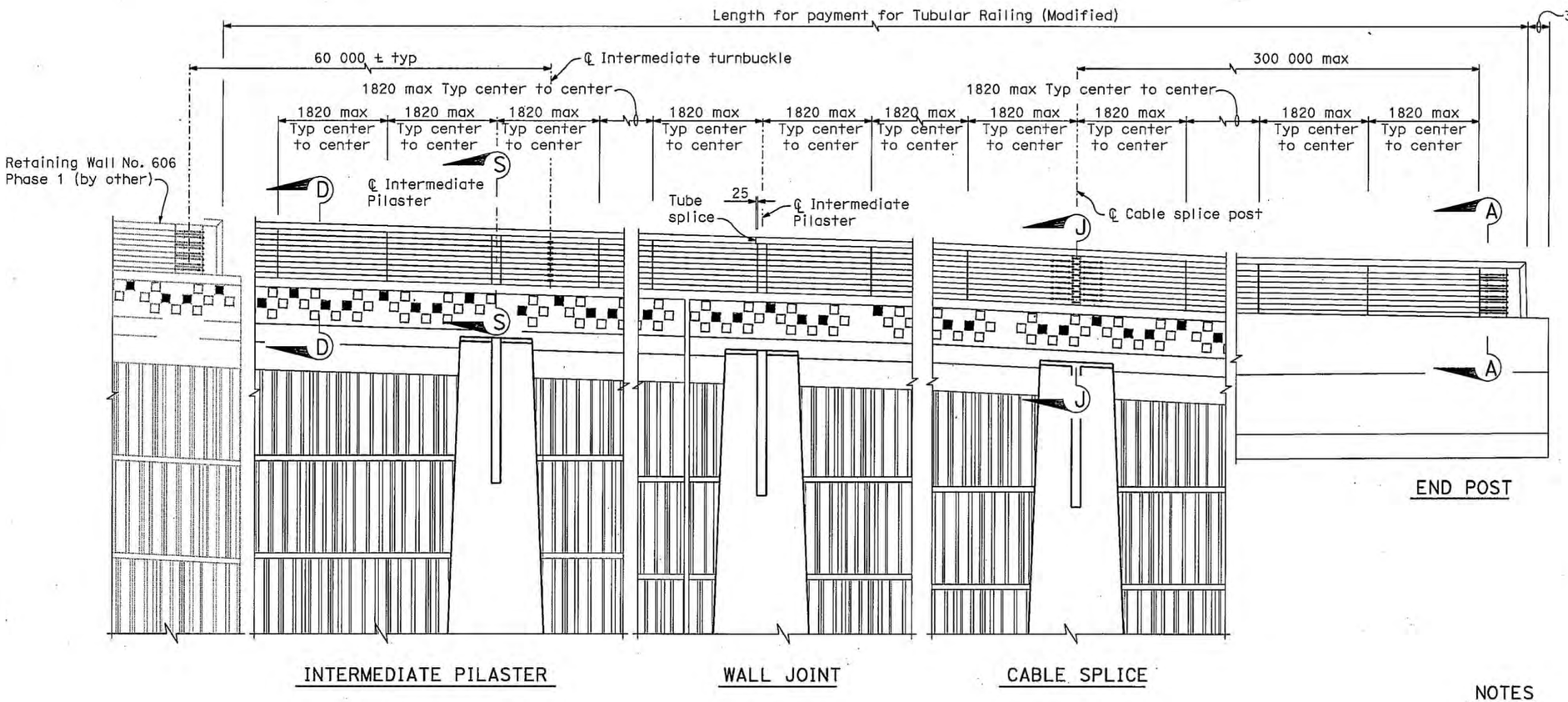

GENERAL NOTE

These "STUDY" details are schematic and incomplete and are intended to identify architectural treatment elements and detailing for this project.

See drawings for Retaining Wall No.606 Lomas Santa Fe Drive (Widen) for project Contract No. 11-2358U4 for more information on Details.

NOTES

1. All steel plates to be ASTM A588.
   All steel tubing to be ASTM A847.
2. Post shall be vertical.
3. Rail tubes shall be shop bent or fabricated to fit horizontal and vertical curves when radius is less than 300 m.
4. Tube splices shall be located in the tubes spanning wall joints. Increase joint width in tubes to match expansion joint width and increase sleeve length correspondingly.
5. Top rail tube shall be continuous over not less than two posts except a short post spacing is permitted near deck or wall joints, electroliers, or other rail discontinuities as noted.
6. For Section A-A, see "Tubular Railing No. 2" sheet.
7. For Sections D-D and J-J, see "Tubular Railing No. 3" sheet.
8. For Section S-S, see "Tubular Railing No. 4" sheet.

ALL DIMENSIONS ARE IN MILLIMETERS UNLESS OTHERWISE SHOWN

FOR INFORMATION ONLY

BRIDGE NO.

RETAINING WALL STUDY

TUBULAR RAILING No.1

ORIGINAL SCALE IN MILLIMETERS FOR REDUCED PLANS 0 10 20 30 40 50 60 70 80 90 100

FILE => DAR-Arch DetElevSections-new.dgn

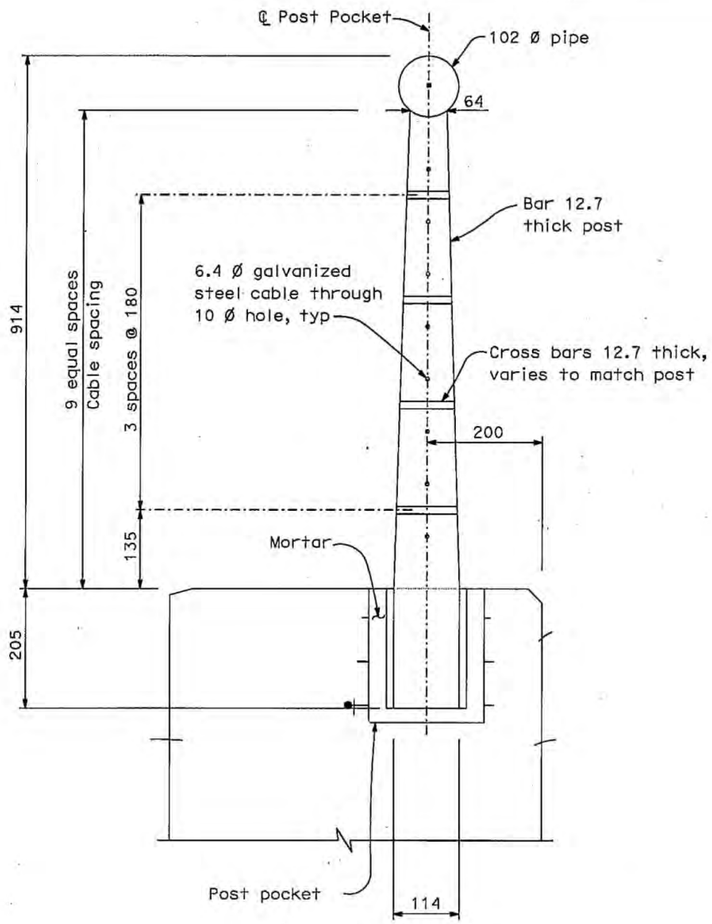

SECTION A-A

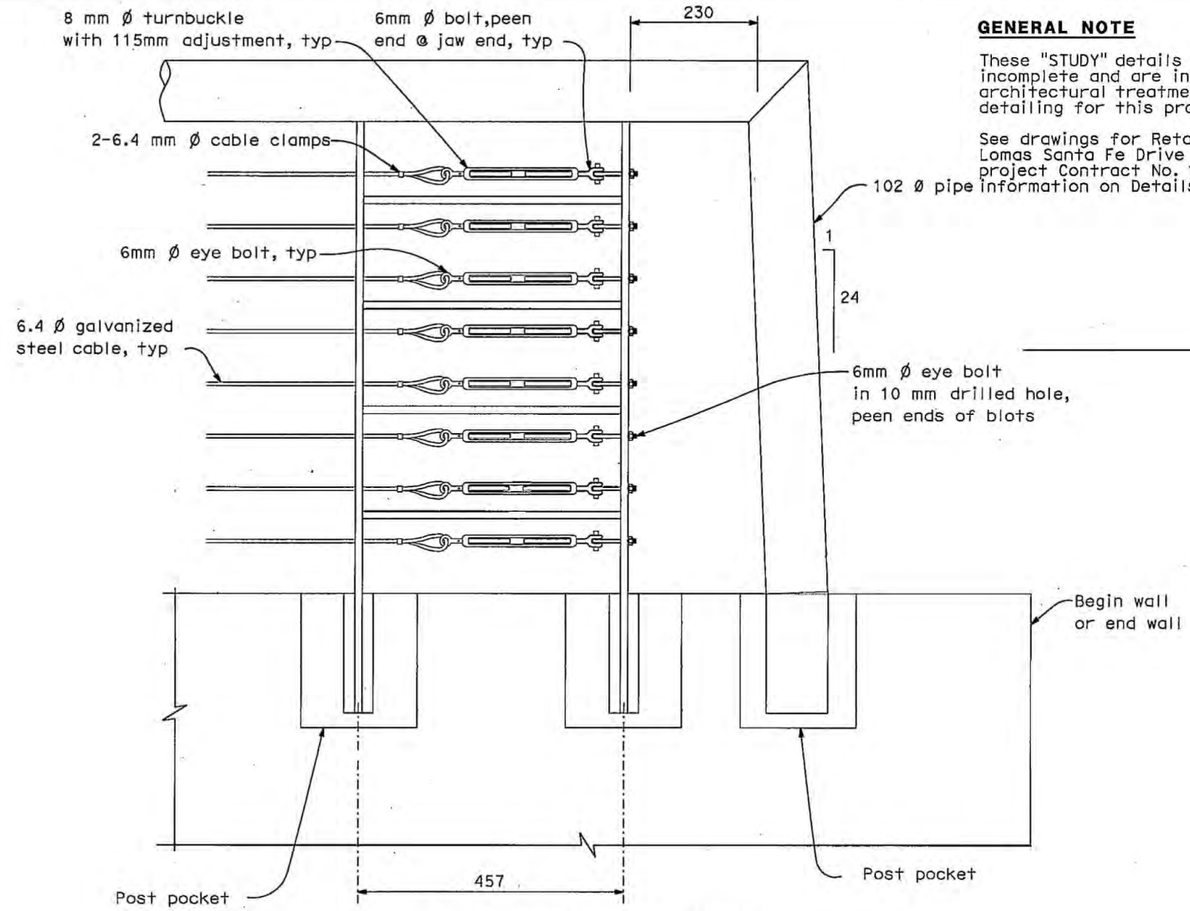

PART END POST ELEVATION

GENERAL NOTE

These "STUDY" details are schematic and incomplete and are intended to identify architectural treatment elements and detailing for this project.

See drawings for Retaining Wall No.606 Lomas Santa Fe Drive (Widen) for project Contract No. 11-2358U4 for more information on Details.

ALL DIMENSIONS ARE IN
MILLIMETERS UNLESS OTHERWISE SHOWN

FOR INFORMATION ONLY

BRIDGE NO.	RETAINING WALL STUDY
	TUBULAR RAILING No.2

ORIGINAL SCALE IN MILLIMETERS FOR REDUCED PLANS 0 10 20 30 40 50 60 70 80 90 100

FILE => DAR-Arch DetElevSections-new.dgn

GENERAL NOTE

These "STUDY" details are schematic and incomplete and are intended to identify architectural treatment elements and detailing for this project.

See drawings for Retaining Wall No.606 Lomas Santa Fe Drive (Widen) for project Contract No. 11-2358U4 for more information on Details.

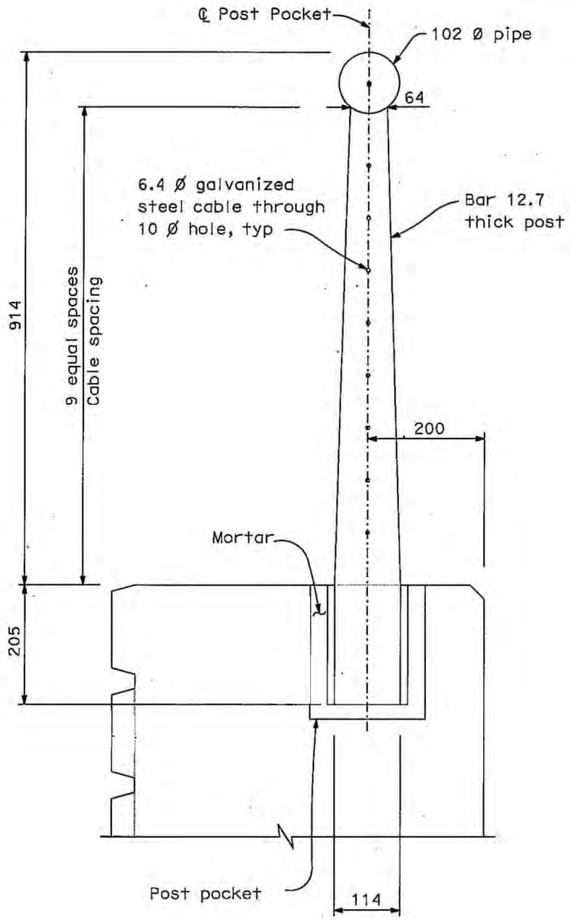

SECTION D-D

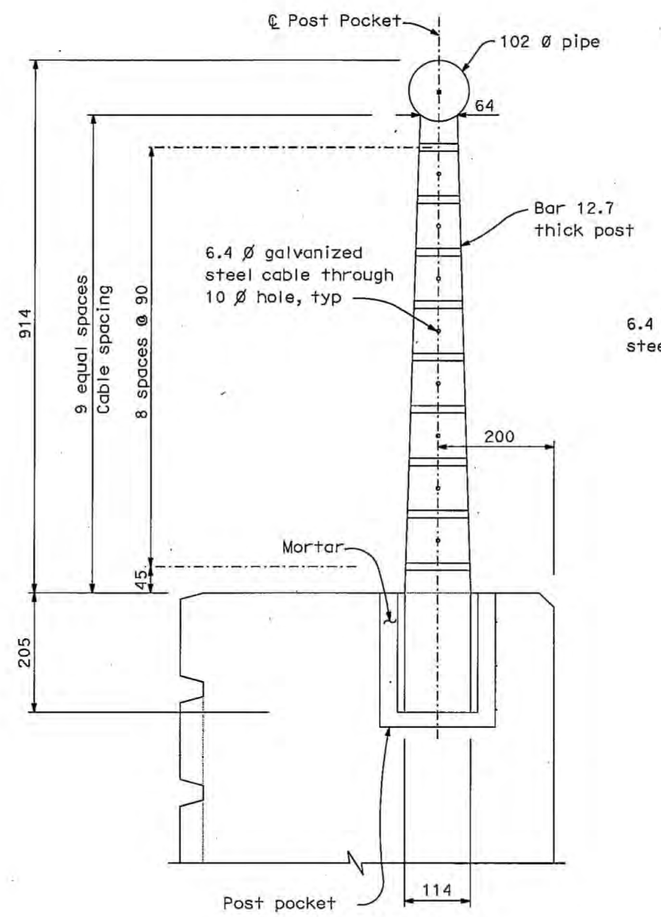

SECTION J-J

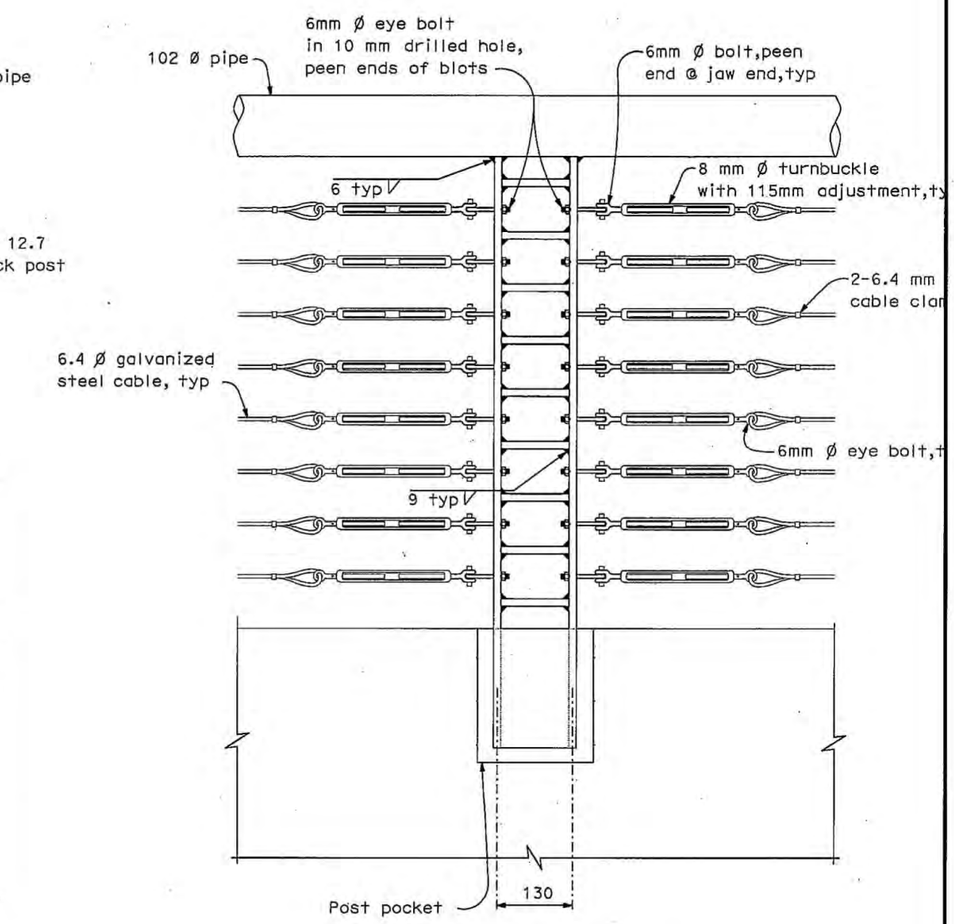

PART ELEVATION

CABLE SPLICE POST ANCHORAGE DETAILS

No Scale

ALL DIMENSIONS ARE IN MILLIMETERS UNLESS OTHERWISE SHOWN

FOR INFORMATION ONLY

BRIDGE NO.	RETAINING WALL STUDY
	TUBULAR RAILING No.3

ORIGINAL SCALE IN MILLIMETERS FOR REDUCED PLANS 0 10 20 30 40 50 60 70 80 90 100

FILE => DAR-Arch DetElevSections-new.dgn

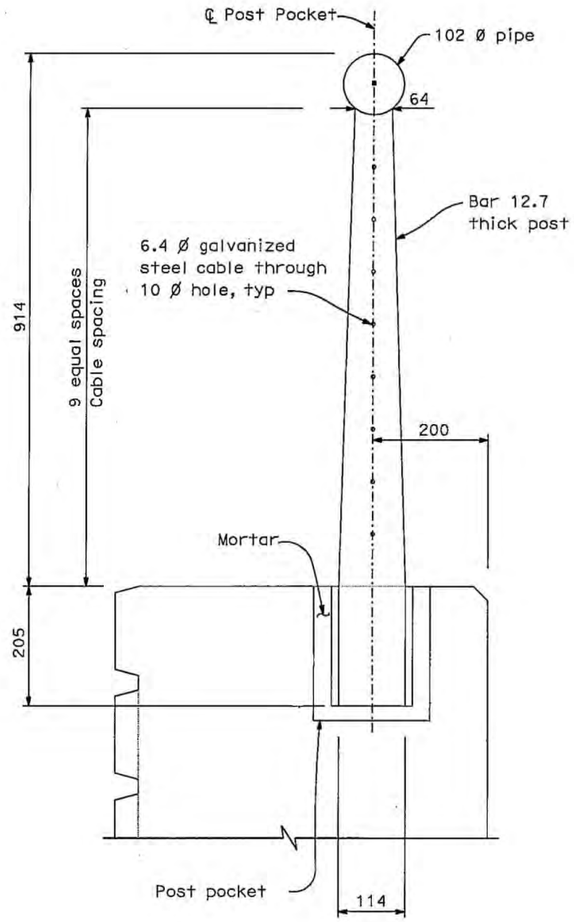

SECTION S-S

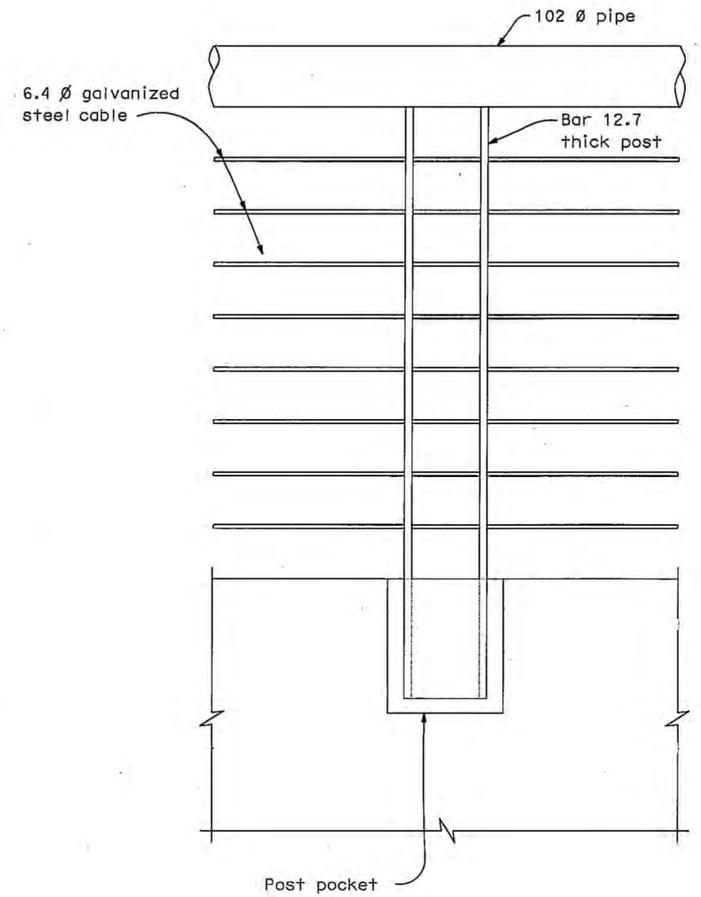

PART ELEVATION

GENERAL NOTE

These "STUDY" details are schematic and incomplete and are intended to identify architectural treatment elements and detailing for this project.

See drawings for Retaining Wall No.606 Lomas Santa Fe Drive (Widen) for project Contract No. 11-2358U4 for more information on Details.

INTERMEDIATE POST AT ℄ PILASTER ANCHORAGE DETAILS

No Scale

ALL DIMENSIONS ARE IN MILLIMETERS UNLESS OTHERWISE SHOWN

FOR INFORMATION ONLY

BRIDGE NO.

RETAINING WALL STUDY

TUBULAR RAILING No.4

ORIGINAL SCALE IN MILLIMETERS FOR REDUCED PLANS 0 10 20 30 40 50 60 70 80 90 100

FILE => DAR-Arch DetElevSections-new.dgn

GENERAL NOTES

1. These "STUDY" details are schematic,incomplete and are intended to identify architectural treatment elements required for this project. The wall design for this project should incorporate similar pilasters, cap, block pattern, block sizes and block textures.

WALL NOTES:

1. CORE SIZE FOR 10" WIDE BLOCK SHALL MATCH THE CORE SIZE FOR 8" WIDE BLOCKS.
2. ALL PILASTERS SHALL BE PLUMB.
3. FOR DETAILS NOT SHOWN, SEE STANDARD PLAN, B15-1.
4. PROVIDE 16" X4" X 16" PILASTER BLOCK NEAR BOTTOM OF WALL AS REQ'D FOR TOP OF PILASTER TO BE FLUSH WITH ADJACENT WALL.
5. BLOCK 'A' SHOULD BE IN THE COURSE BELOW THE BLOCK CAP WHEREVER POSSIBLE.

MASONRY BLOCK LEGEND:

- BLOCK 'A': 10" x 8" x 16" SMOOTH FACE ALL EXPOSED SIDES. BLOCK WILL PROJECT 1" ON BOTH SIDES OF WALL.
- BLOCK 'B' : 8" x 8" x 8" SPLIT FACE ALL EXPOSED SIDES.
- BLOCK 'D': 8" x 8" x 16" SPLIT FACE ALL EXPOSED SIDES.
- BLOCK 'C': 10" x 4" x 16" SPLIT FACE ALL EXPOSED SIDES. BLOCK WILL PROJECT 1" ON BOTH SIDES OF WALL.
- BLOCK 'E' : 16" x 8" x 16" SPLIT FACE ALL EXPOSED SIDES EXCEPT WHERE FACE MEETS FIELD WALL.
- CAP BLOCK: 10" x 4" x 16" SMOOTH FACE AT FIELD WALL
  CAP BLOCK: 16" x 4" x 16" SMOOTH FACE AT PILASTER

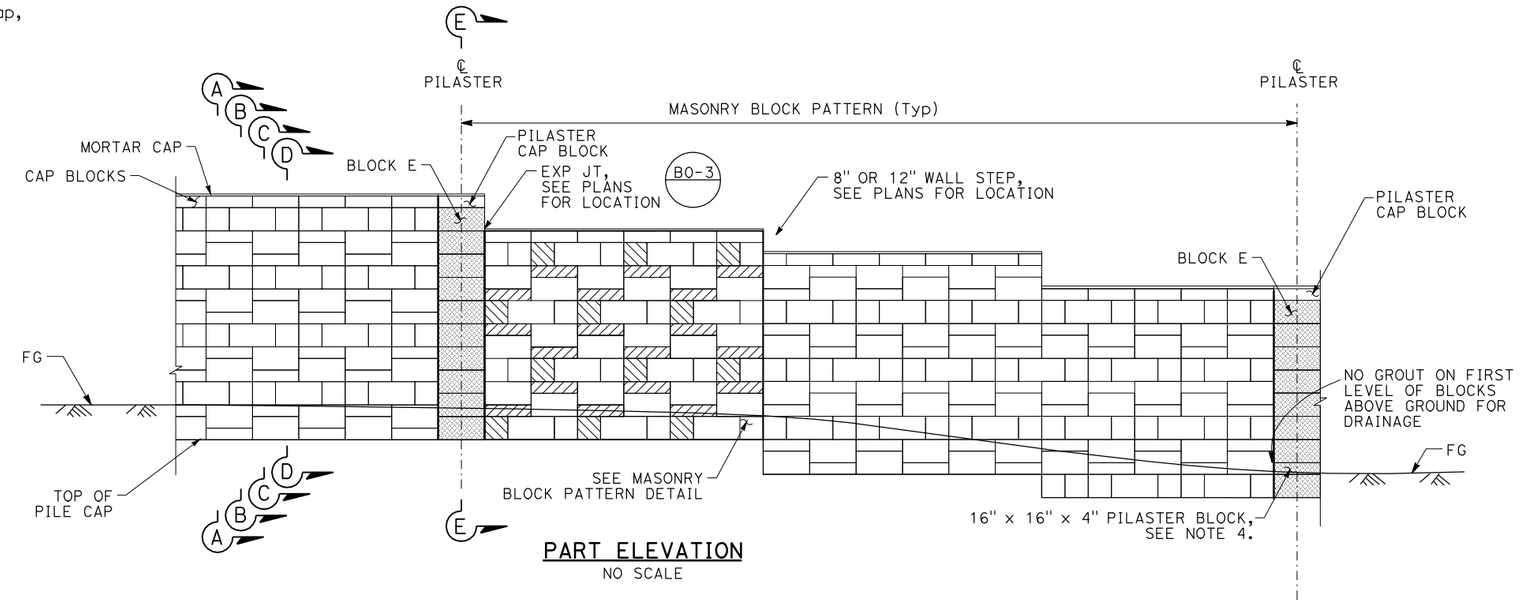

PART ELEVATION
NO SCALE

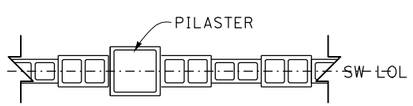

PLAN DETAIL (SINGLE BLOCK PILASTER)
No Scale

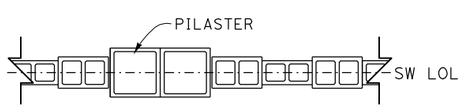

PLAN DETAIL (DOUBLE BLOCK PILASTER)
No Scale

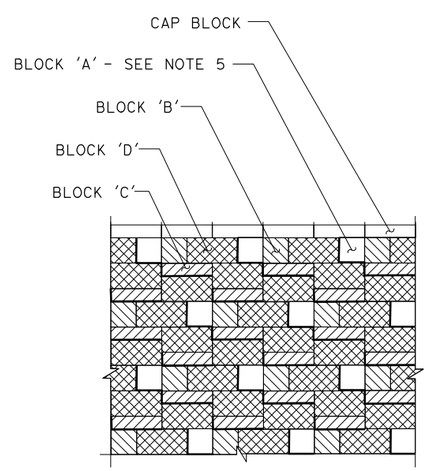

MASONRY BLOCK PATTERN
NO SCALE

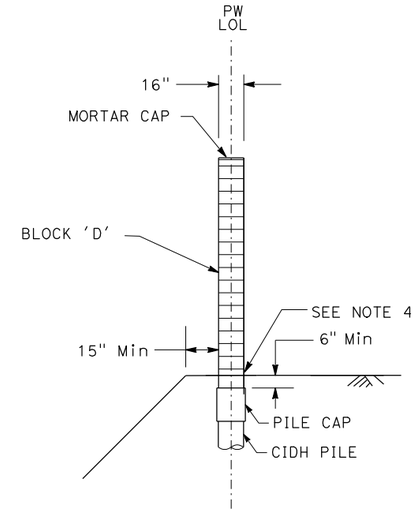

SECTION E-E
NO SCALE

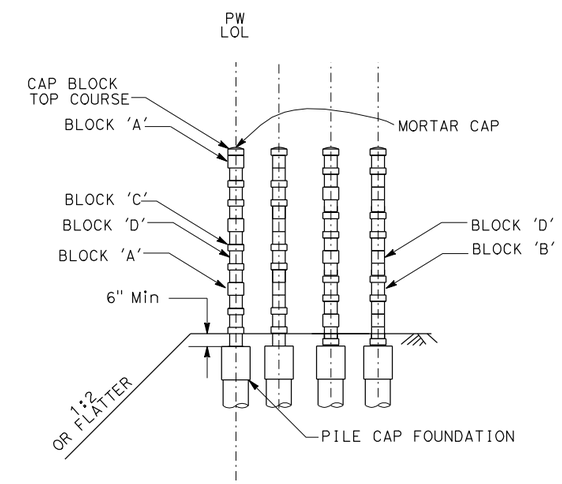

SECTIONS A-A, B-B, C-C, & D-D
NO SCALE

FOR INFORMATION ONLY

BRIDGE NO.	
57E0075/76	**MASONRY SOUND WALLS**
	ARCHITECTURAL STUDY DETAILS NO. 1

ORIGINAL SCALE IN MILLIMETERS FOR REDUCED PLANS 0 10 20 30 40 50 60 70 80 90 100

FILE => DAR-Arch DetElevSections-new.dgn

Index of Reference Information Documents

A "**W**" under available column indicates documents that can be found on the Internet, an "**E**" indicates the document will be provided electronically, and "**CO**" indicates the Contractor shall obtain the document. Web sites are not guaranteed but are supplied for information. It is ultimately the Contractor's responsibility to locate the documents.

Title	Available
EXISTING INFORMATION	
Bridge_Log_Dist 11_Route 805.pdf	E
As-Built Plans	
11-045874.pdf -- 0.4 mile north of Route 163 to 0.6 mile north of Route 52 with connection to Route 52, PM 21.0/24.3, Year Complete: 1/25/1972	E
11-045884.pdf – 0.6 mile north of Route 52 to 0.1 mile north of Old Miramar Road, PM 24.2/26.7, Year Complete: 8/9/1971	E
11-045894.pdf – 0.1 mile north of Miramar Road to Route 5, PM 26.4/28.9 Year Complete: 10/12/1972	E
11-089714.pdf – 0.1 km south of Governor Drive Undercrossing to 0.8 km north of Rose Canyon Bridge Overhead, PM 24.2/25.5 Year Complete: 06/30/2003	E
57-0787 LR Soledad Canyon BOH asbuilt.pdf	E
57-0757S Soledad Canyon Offramp BOH asbuilt.pdf	E
57-0759_LR_governor bridge asbuilt.pdf	E
57-0760_LR_rose canyon BOH asbuilt.pdf	E
57-0761_la jolla village drive oc asbuilt.pdf	E
57-0762_eastgate mall road oc asbuilt.pdf	E
57-0785 LR_mira mesa blvd uc asbuilt.pdf	E

Title	Available
57-0786L_Sorrento valley blvd uc asbuilt.pdf	E
11-045894_rd.pdf – Added roadway plans to As-built plans posted previously	E
11-046164.pdf – As-built plans for project within the project limits	E
11-108484.pdf – As-built plans for project within the project limits	E
11-164434.pdf – As-built plans for project within the project limits	E
57-0785S_Mira Mesa_Blvd.pdf – Structures As-built plans for Mira Mesa Boulevard Off-Ramp Bridge	E
CAiCE and Survey Files	
S0717ABC surface smaller.zip – existing DTM	E
805_Exist Align.kcm --- existing Route 805 alignments and Mira Mesa Off –Ramp (CAiCE format)	E
805 existing alignments– existing Route 805 main lane and ramps traverses	E
805_Proposed Align.kcm --- proposed ramp alignments (CAiCE format)	E
805 new alignments.pdf--- proposed ramp traverses	E
805_2T0404 Align_Metric.kcm --- contract 2T0404 ramps alignments (CAiCE Metric format)	E
2T0404 ramp alignments.pdf – contract 2T0404 ramps traverses	E
805_089754_Align_Metric.kcm --- contract 089754 ramps alignments (CAiCE Metric format)	E
089754 ramp alignments.pdf – contract 089754 ramps traverses	E
2t200db_110711.zip – Zipped file containing the CAiCE and Survey files in English unit	E

Title	Available
Topography	
E0501_E0512_2d.dgn --- Existing Topo from south of Clairemont Mesa Blvd to north of Governor Dr., PM 22.6 /24.9	E
E0513_E0520_2d.dgn --- Existing Topo from north of Governor Dr. to north of Eastgate Mall Blvd, PM 24.9/ 26.3	E
E0521_E0525_2d.dgn --- Existing Topo from north of Eastgate Mall Blvd to north of Mira Mesa Blvd, PM 26.3/ 27.1	E
E0525_E0533_2d.dgn --- Existing Topo from north of north Mira Mesa Blvd to north of Sorrento Valley Blvd, PM 27.1/28.3	E
Aerial Images.zip	E
Topography_CP.zip – Zipped folder containing Topography files containing other Control Points within the project limits	E
PROJECT STUDIES AND REPORTS	
2011_01_11_Final_Project_Report_link.pdf	E
I805N Final Environmental Document.pdf	E
2011_07_20 Signed MAR Approval Ltr I-805N.pdf	E
2011_07_26_structure_section_recommendation_2t2001.pdf	E
Technical Reports	
ADL Study	
2009_01_29_Aerially Deposited Lead Study Report.pdf	E
Air Quality Report	
2009_07_23_Final Air Quality Study.pdf	E
Community Impact Report	
2008_08_29_I-805 North.pdf	E

Title	Available
CSMP	
2009_08_04_Final_CSMP805_Conprehensive_Perf_Assessment.pdf	E
Foundation Loading and Deformation due to Liquefaction Induced Lateral Spreading	
Guidelines on Foundation Loading-Feb 2011.pdf – Guidelines on Foundation Loading and Deformation Due to Liquefaction Induced Lateral Spreading	E
Foundation Reports (FR) For Carroll Canyon Road Bridge	
FR-Carroll-Canyon-Rd.zip – Zipped folder containing the following reports for the Carroll Canyon Road Bridge: • Preliminary Seismic Report • Final Seismic Design Letter • Foundation Report dated 04-13-09 • Revised Foundation Report - Bent 10 dated 06-23-11	E
Geotechnical Reports	
2007_12_18_Structures_Preliminary_Geo.pdf	E
2008_03_28_District_Preliminary_Geotech.pdf	E
Carroll Canyon DAR BOH & RET walls PFR.pdf	E
Governor Drive UC 57-059RL PFR.pdf	E
Rose Canyon BOH 57-760RL PFR.pdf	E
Soledad Canyon BOH 57-787LR Widen PFR.pdf	E
PFR_Mira_Mesa_blvd_UC.pdf – Preliminary Foundation Report for the Mira Mesa Blvd UC (Br. No. 57-0785R)	E

Title	Available
Hazardous Waste ISA	
2008_06_19 final isa.pdf	E
Limited Asbestos Survey Report.pdf	E
NADR	
2010_09_28_I-805_Final_NADR.pdf	E
Natural Environmental Study	
2008_10_30_Natural Env Study.doc	E
Noise Studies	
2003_03_17_I805 NSR Combined Figures.pdf	E
2008_05_13_805N Noise Analysis Final Report.pdf	E
2009_03_11_NSR addendum.pdf	E
2009_03_18_NSR addendum_tables.pdf	E
2010_09_27_Memo_Governor Dr_Noise.pdf	E

Title	Available
Preliminary Seismic Design Recommendation (PSDR)	
PSDR-Reports.zip – Zipped folder containing the following PSDR reports for: • Governor Dr. UC • Rose Canyon Bridge & OH • Soledad / Carroll Canyon Bridge & OH • DAR Bridge over Carroll Canyon Road Bridge • Construction of DAR Retaining Walls • Mira Mesa Blvd UC	E
SWDR	
2010_01_29_805N Final SWDR PA&ED.pdf	E
11_089751_SWDR.pdf – SWDR for an adjacent project in PS&E phase	E
Traffic Reports	
2009_03_Final 805 N Traffic Forecast Appdx.pdf	E
2009_03 Final 805 North Traffic Forecast Report.pdf	E
2009_05_12 Carroll Canyon and Nobel DAR loc.pdf	E
2009_11_03_Final I-805 N Traffic Operations.pdf	E
TI_Calculations.pdf – Traffic Index Calculations	E
Visual Impact Assessment	
2009_03_27_Final I805 VIA.pdf	E

Title	Available
Water Quality	
2009_10 805 North WQ Report.pdf	E
ONGOING CONTRACTS	
11-089754 contract plan --- La Jolla Village Drive Interchange (Metric) http://www.dot.ca.gov/hq/esc/oe/project_ads_addenda/11/11-089754/	W
11-2T0404 contract plan --- Carroll Canyon North DAR (Metric) http://www.dot.ca.gov/hq/esc/oe/project_ads_addenda/11/11-2T0404/	W
Hinge Design Memo_06-28-11.pdf	E
Hinge CCO Plans_6-28-11.pdf	E
CONCEPTUAL PLANS	
Project Feature Map.pdf	E
11-2T2004-Conceptual- Plans.pdf	E
b2T200AA1.dgn – Updated Microstation master file updated with ESA areas (Provided to Proposers)	E
alt5.dgn – Microstation file showing the ultimate design showing all the planning phases (Provided to Proposers)	E
Bridge Site	
57_0760RL_Rose_Cyn_Bridge.zip --- Bridge Site Submittal for Rose Canyon BOH (Provided to Proposers)	E
57_0787_Carroll Canyon_Bridge.zip --- Bridge Site Submittal for Carroll Canyon BOH (Provided to Proposers)	E
57_DAR2 Carroll Canyon DAR.zip --- Bridge Site Submittal for Carroll Canyon DAR (Provided to Proposers)	E
57_0759 Governor Drive Bridge.zip --- Bridge Site Submittal for Governor Drive Bridge (Provided to Proposers)	E