Dist	COUNTY	ROUTE	POST MILES TOTAL PROJECT	SHEET No.	TOTAL SHEETS

REGISTERED CIVIL ENGINEER DATE

PLANS APPROVAL DATE

REGISTERED PROFESSIONAL ENGINEER No. Exp. CIVIL STATE OF CALIFORNIA

THE STATE OF CALIFORNIA OR ITS OFFICERS OR AGENTS SHALL NOT BE RESPONSIBLE FOR THE ACCURACY OR COMPLETENESS OF ELECTRONIC COPIES OF THIS PLAN SHEET.

NOTES:

1. ALL DIMENSIONS ARE IN FEET UNLESS OTHERWISE SHOWN.
2. DIMENSIONS OF THE STRUCTURAL SECTIONS ARE SUBJECT TO TOLERANCES SPECIFIED IN THE STANDARD SPECIFICATIONS.
3. SUPERELEVATION AS SHOWN OR AS DIRECTED BY THE ENGINEER.
4. CORRECT THE CROSS SLOPE TO 2% BY PROFILED COLD PLANING (SEE CONSTRUCTION DETAIL).
5. FOR DIKE LIMITS AND TYPE SEE SUMMARY OF QUANTITIES.

DESIGN DESIGNATION

2008 ADT = 63,200	T=17%
2030 ADT = 112,700	T=19%
2008 DHV = 6,100	DS=66/33
2030 DHV = 10,800	DS=65/33

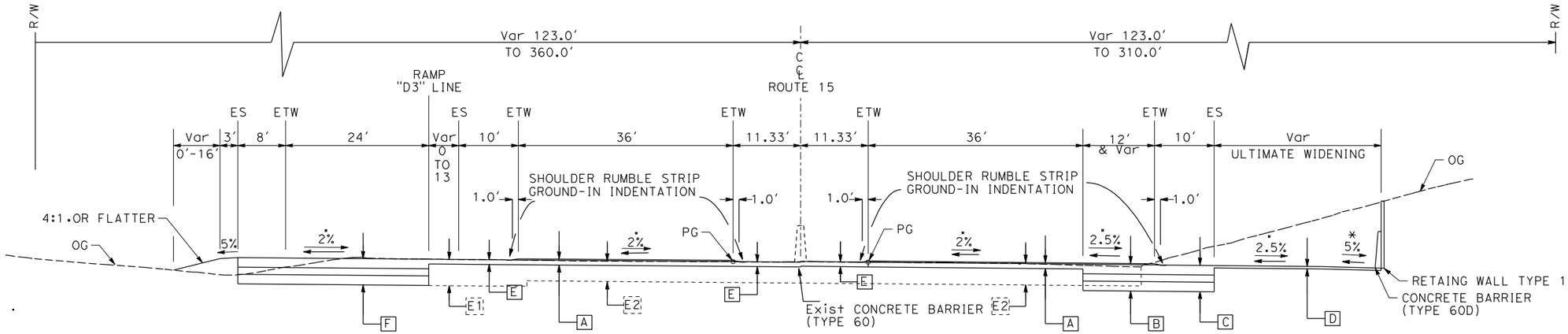

STA 139+14.63 TO 143+27.45

ROUTE 15

STA 139+14.63 TO 152+60.95

* EXCEPT FOR SUPER

STA 139+14.63 TO 145+07.

A — 0.1′ OGFC; 0.3′ HMA; COLD PLANE HMA (0.3′ MAX)

B — 0.1′ OGFC; 0.8′ HMA; 0.6′ LCB; 0.8′ CLASS 2 AS

C — 0.8′ HMA; 0.6′ LCB; 0.8′ CLASS 2 AS

D — 0.2′ HMA

E — 0.3′ HMA; COLD PLANE HMA (0.3′ MAX)

F — 1.0′ HMA; 0.6′ LCB; 0.8′ CLASS 2 AS

EXISTING STRUCTURAL SECTION

E1 — 1.0′ AC (TYPE C); 0.6′ LCB; 0.8′ CLASS 2 AS

E2 — 0.8′AC; 0.6′ LCB; 0.8′ CLASS 2 AS

**
VARIES LINEARLY
0′-10′ STA 126+81.87 TO 129+36.83
10′-12′ STA 129+36.83 TO 139+14.63

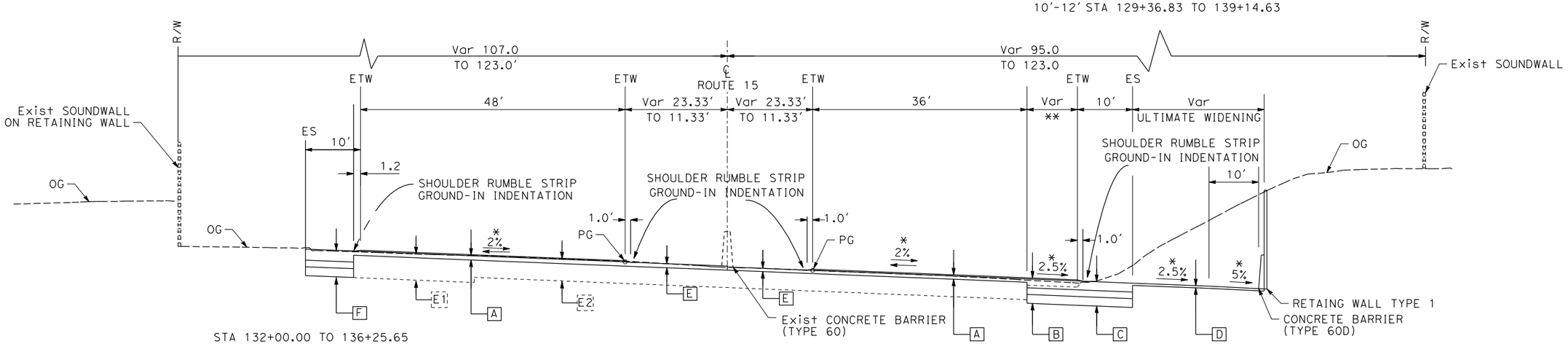

STA 132+00.00 TO 136+25.65

ROUTE 15

STA 123+22.32 TO 139+14.63

* EXCEPT FOR SUPER

ALL DIMENSIONS ARE IN FEET
UNLESS OTHERWISE SHOWN

TYPICAL CROSS SECTIONS

X- 001

NO SCALE

STATE OF CALIFORNIA - DEPARTMENT OF TRANSPORTATION

Caltrans **DESIGN DIVISION**

SUPERVISING ENGINEER

CALCULATED-DESIGNED BY

CHECKED BY

REVISED BY

DATE REVISED

LAST REVISION 00-00-00

DATE PLOTTED => $DATE
TIME PLOTTED => $TIME