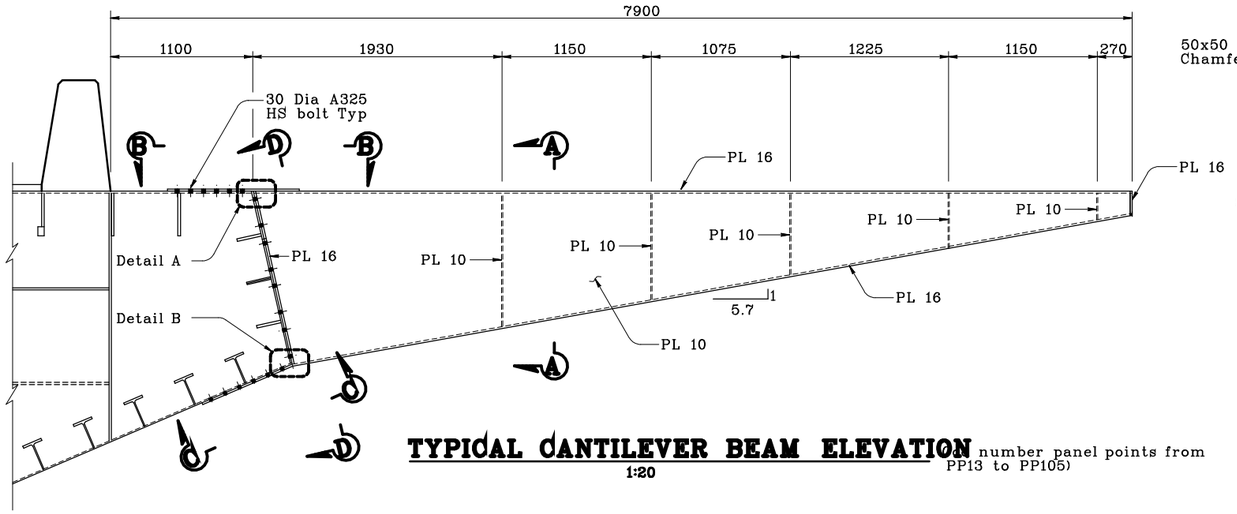

TYPICAL CANTILEVER BEAM ELEVATION
1:20
(number panel points from PP13 to PP105)

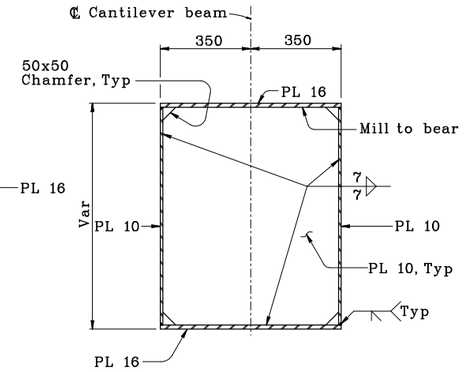

SECTION A-A
1:10

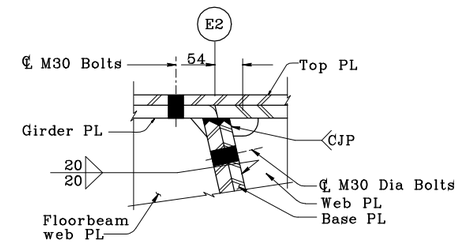

DETAIL A
1:5

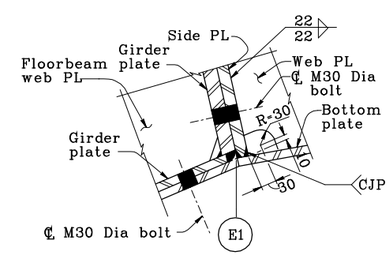

DETAIL B
1:5

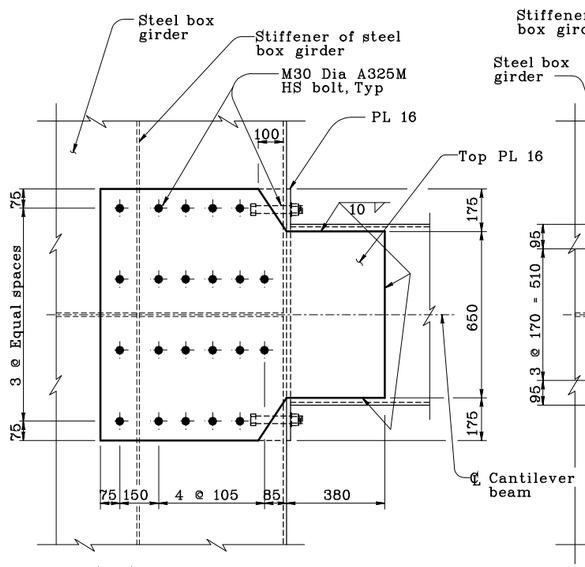

SECTION B-B
1:10

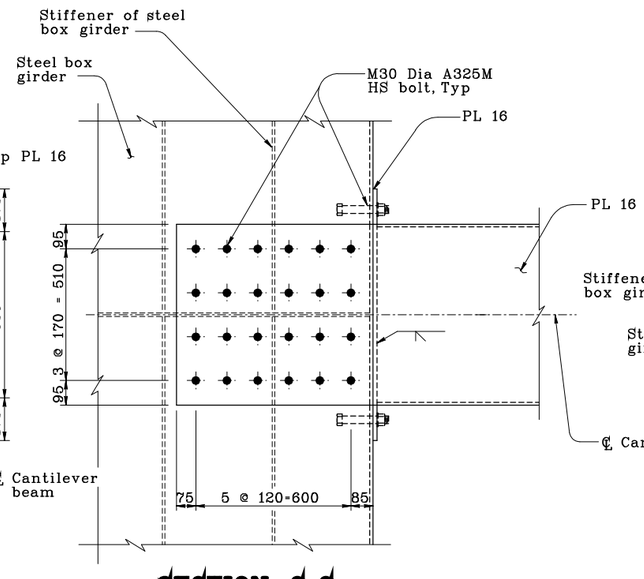

SECTION C-C
1:10

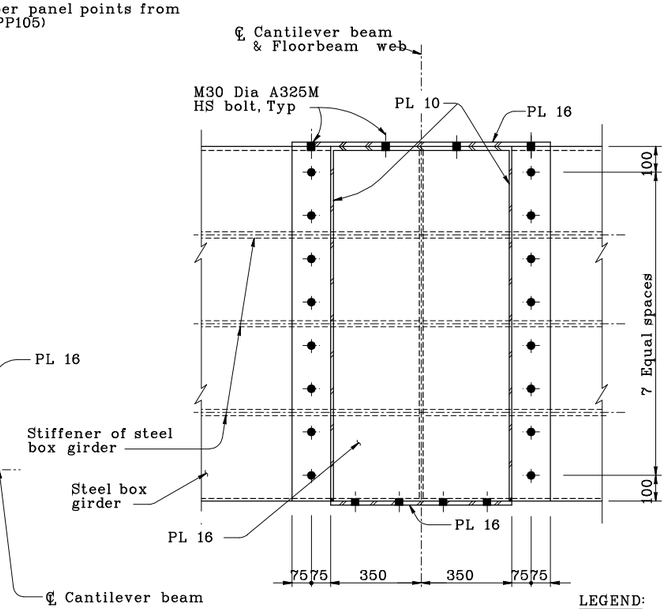

SECTION D-D
1:10

LEGEND:

PP - Panel point

NOTES:

1. For location of typical cantilever beam, see "Bikepath Layout No.1" through "Bikepath Layout No3" sheets

Tien Hung Ho
C 43990
6/03/01

T. Ho
R. Xu
C. Bernardo
T. McMeans
P. Ritchie
S. Shi

Main Span Suspension Bridge
Preliminary Plans - Not for construction. Subject to changes.

BIKEPATH DETAILS NO.1

T333

05/15/99 08/02/99 05/31/01 06/25/01