Marwan N. Nader
C 054426
12/31/03

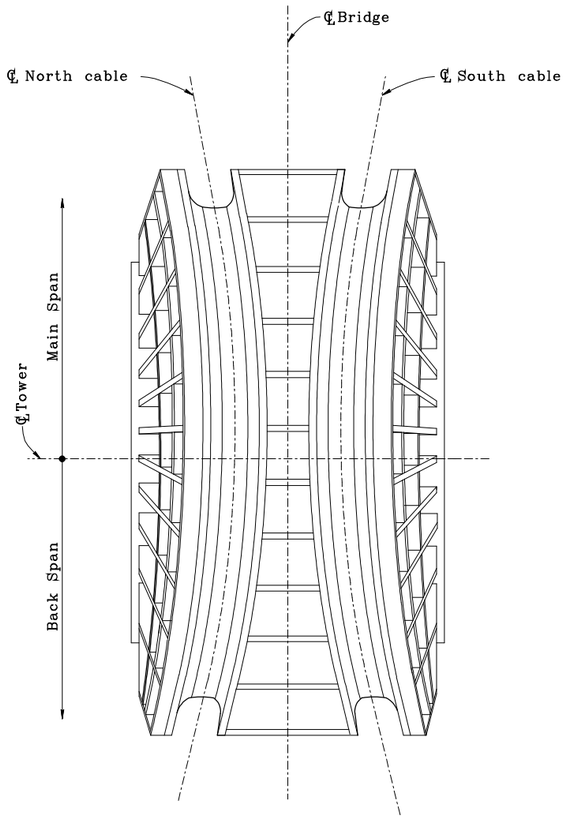

PLAN VIEW
1:50

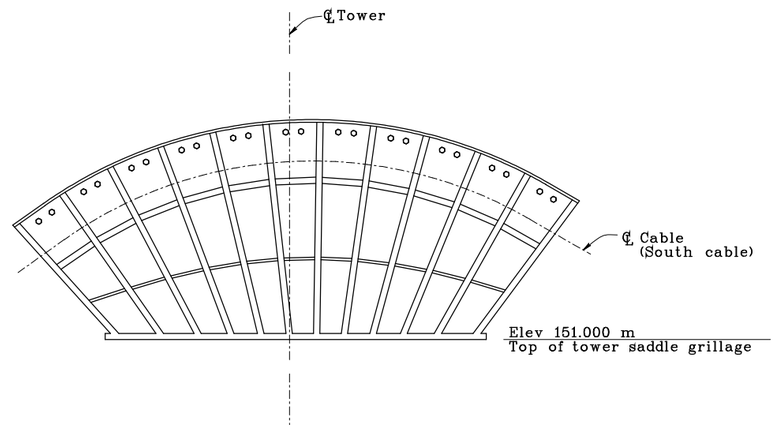

ELEVATION VIEW (looking North)
1:50

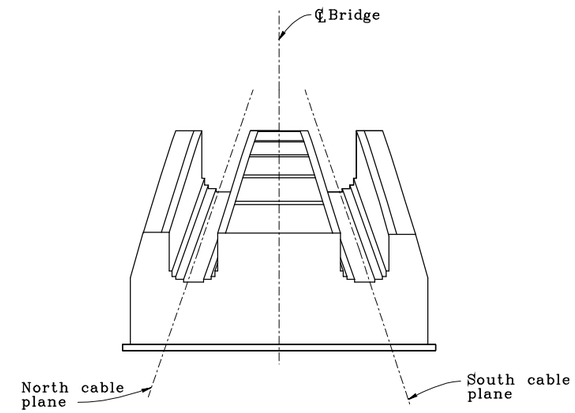

ELEVATION VIEW (looking East)
1:50

Main Span Suspension Bridge
Preliminary Plans - Not for construction. Subject to changes.

T287

M. Nader
L. Rus
L. Rus

J. Kuliki
T. McMeans
D. Harrison

MAIN SPAN SUSPENSION BRIDGE
TOWER SADDLE DETAILS NO.8

01/16/99 08/30/99 06/25/01