SAMPLE – DRAWING OF FOOTING

SAN FRANCISCO-OAKLAND BAY BRIDGE
EAST SPAN SEISMIC SAFETY PROJECT

APRIL 2001

FOOTING CONSTRUCTION NOTES:

1. A schematic concept to construct footing is assumed and shown for informational purpose only.
   Not all details or required temporary support system are shown.
   Other methods of construction and variations of the concept are possible.

1

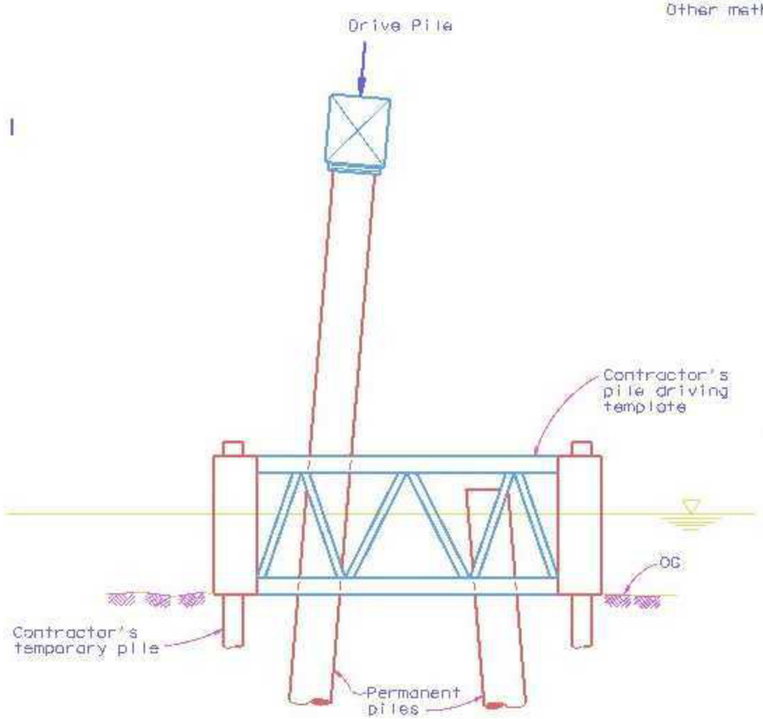

1. Drive piles complete in place.

2

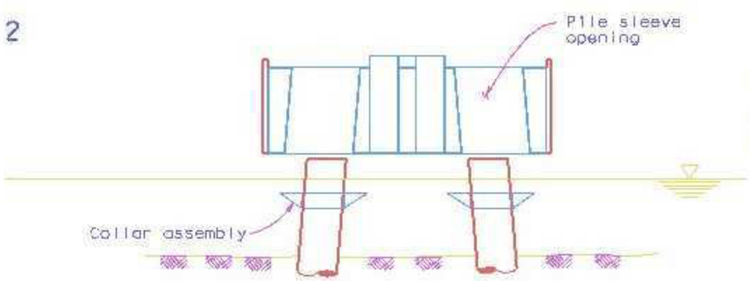

2. Transport fabricated steel footing frame to site.
3. Install and support pile head collar assemblies.
4. Lower steel footing frame.

3

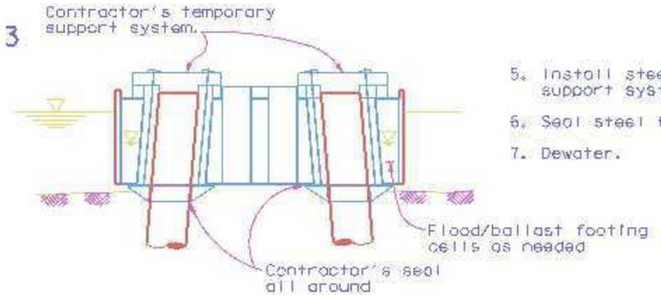

5. Install steel footing frame temporary support system.
6. Seal steel footing frame.
7. Dewater.

4

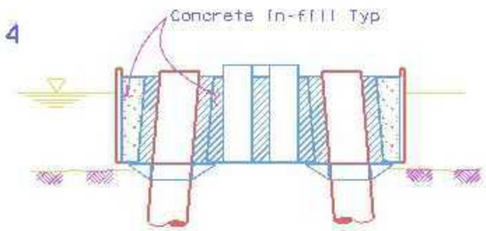

8. Complete pile to footing connections.
9. Remove temporary support system.
10. Place footing concrete.

5

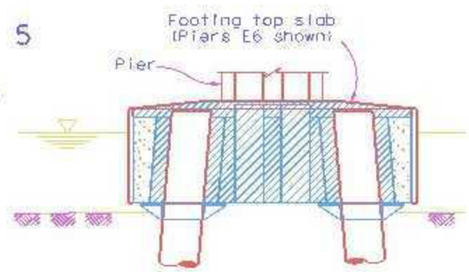

11. Complete footing construction.
12. Construct pier.

LEGEND:

- Approximate Water level
- Lightweight Concrete Fill
- Structural Concrete
- OG - Approximate Original Ground

FOR INFORMATION ONLY, NOT A CONTRACT DRAWING

FOOTING CONSTRUCTION NOTES:

1. A schematic concept to construct footing is assumed and shown for informational purposes only. Not all details or required temporary support system are shown. Other methods of construction and variations of the concept are possible.

1

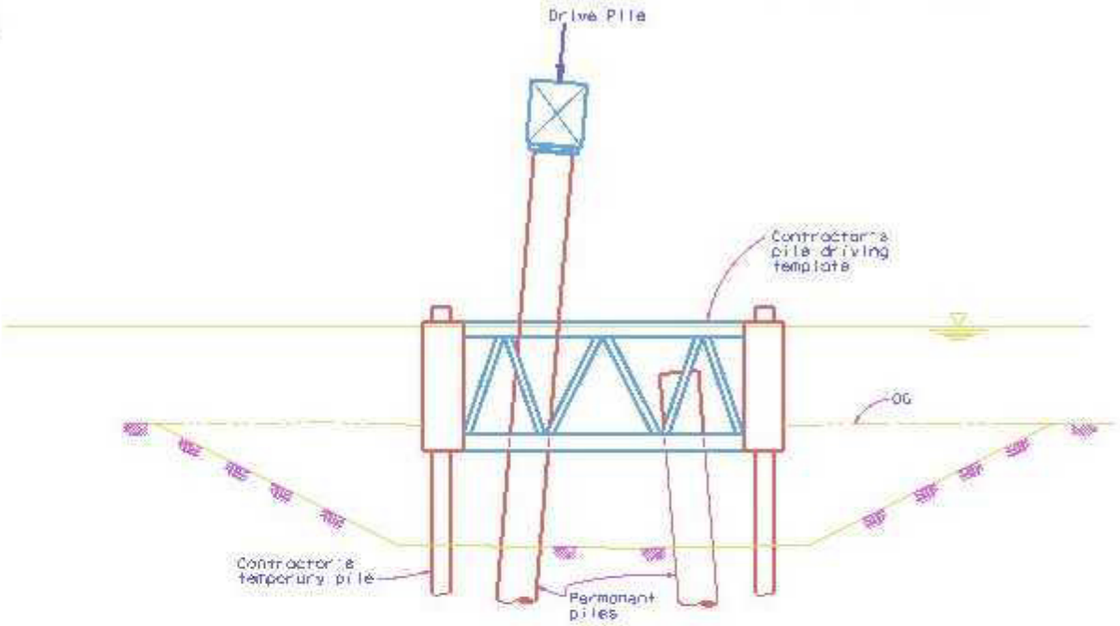

1. Perform structural excavation.
2. Drive piles complete in place.

2

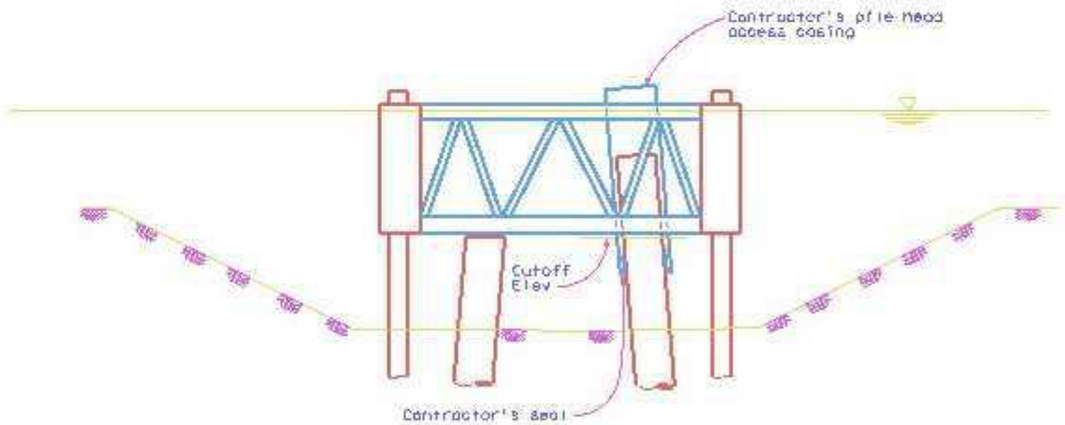

3. Install access casing around pile head.
4. Dewater and cutoff pile

LEGEND:

- Approximate Water level
- Lightweight Concrete Fill
- Structural Concrete

OG - Approximate Original Ground

FOR INFORMATION ONLY, NOT A CONTRACT DRAWING

3

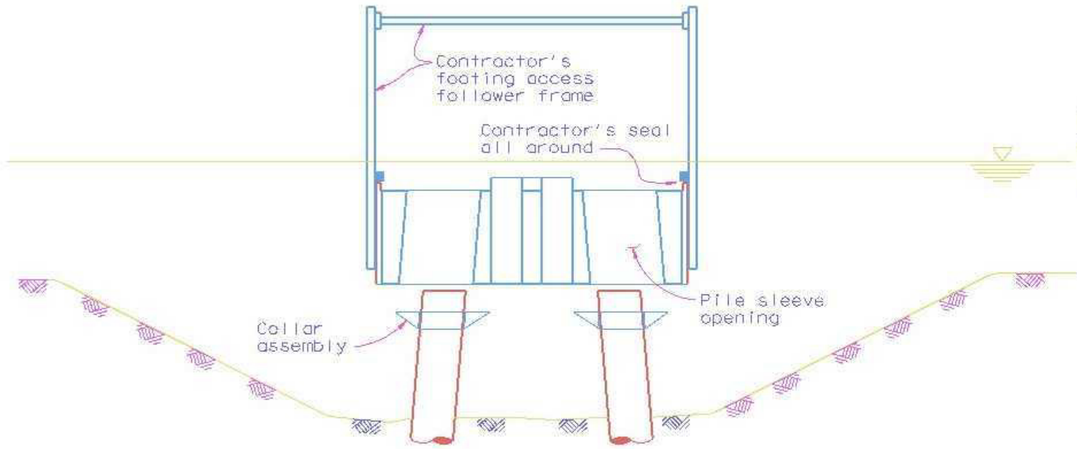

5. Transport fabricated steel footing frame to site.
6. Install and support footing access follower frame and pile head collar assemblies.
7. Install steel footing frame.

4

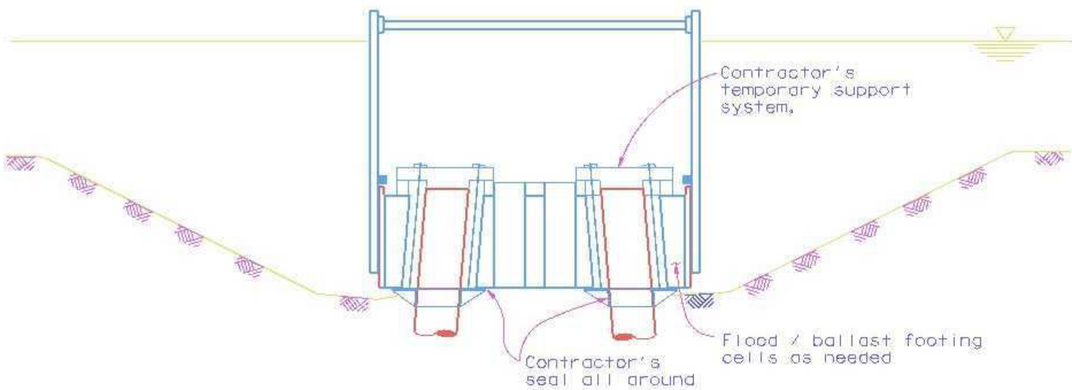

8. Install steel footing frame temporary support system.
9. Seal steel footing frame.
10. Dewater.

5

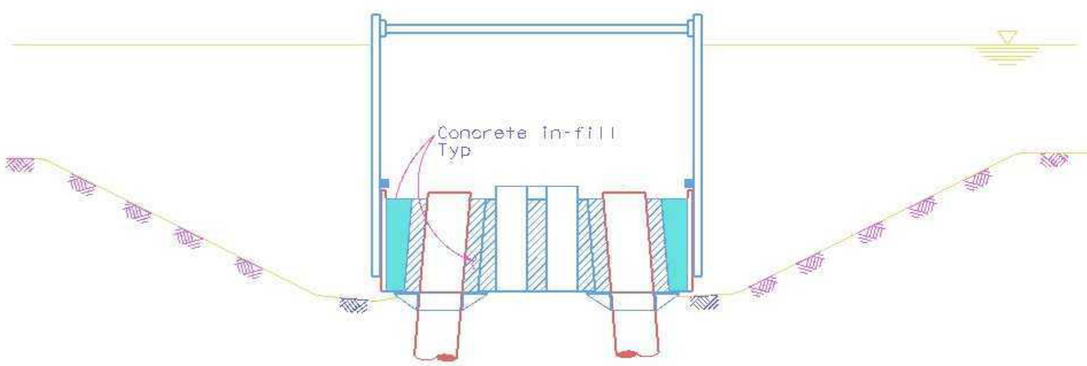

11. Complete pile to footing connections.
12. Remove temporary support system.
13. Place footing concrete.

6

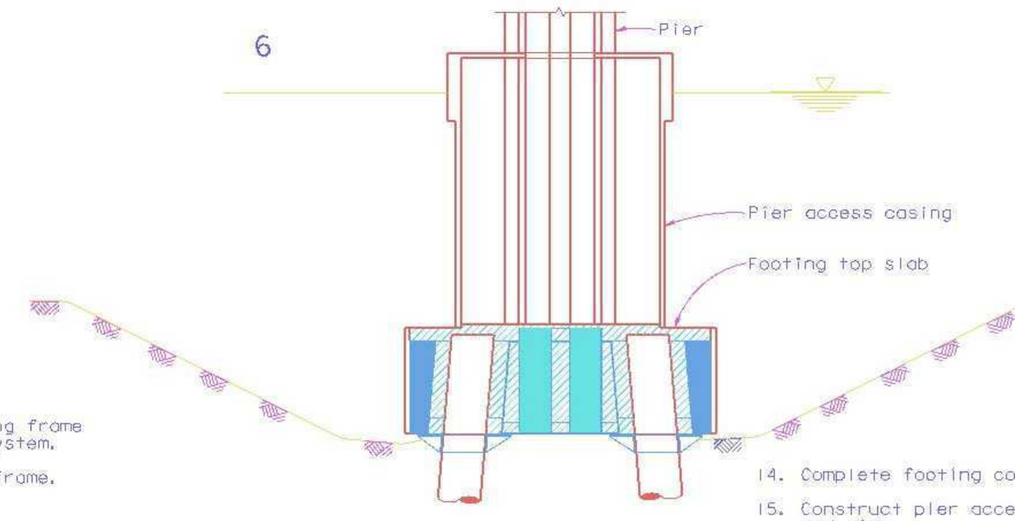

14. Complete footing co
15. Construct pier acce and pier.

LEGEND:

- Approximate Water level
- Lightweight Concrete Fill
- Structural Concrete

OG - Approximate Original Ground

FOR INFORMATION ONLY, NOT A CONTRACT DRAWING