South Railing Repair - Span E10 (Contract No. 04-04154)

The as-built drawings, which are contained in these CDs, are scanned from drawings of the existing structure for the convenience of the contractor and as a means to convey to the contractor the available information regarding the existing structure. It is to be understood that no claim is being made as to the accuracy or completeness of the said information and that the State of California or its officers or agents shall not be responsible for the manner in which the contractor interprets and uses this information or for the accuracy, currency or completeness of these scanned as-built drawings. The contractor shall be responsible to obtain, at the contractor's expense, any additional information that the contractor deems necessary for completely and accurately assessing the existing conditions of the structure. The contractor shall not be entitled to any compensation for any claim arising from inaccuracy or insufficiency of these as-built drawings or in anyway related to these drawings.

1. Project Plan and Elevation
2. Lower Deck Railing Elevation
3. Details and Sections

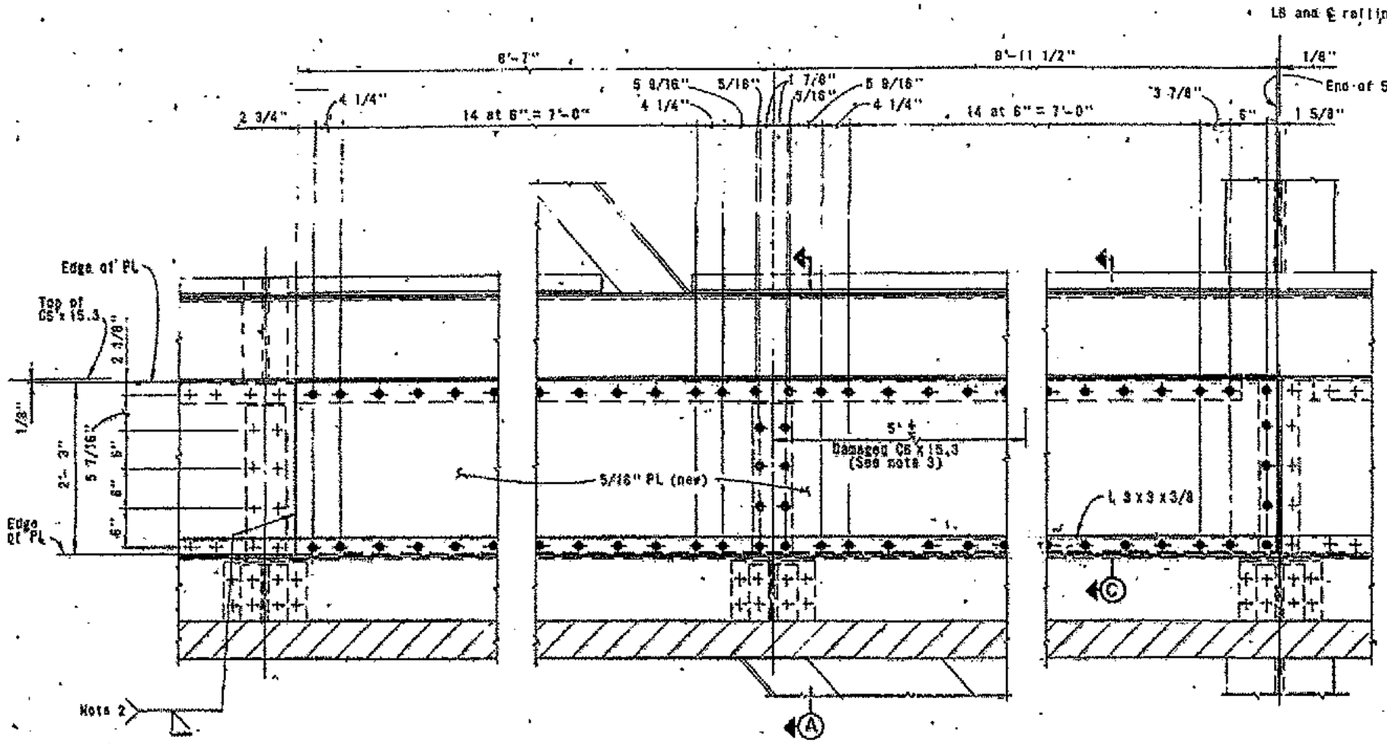

DETAIL 1
Sheet 2

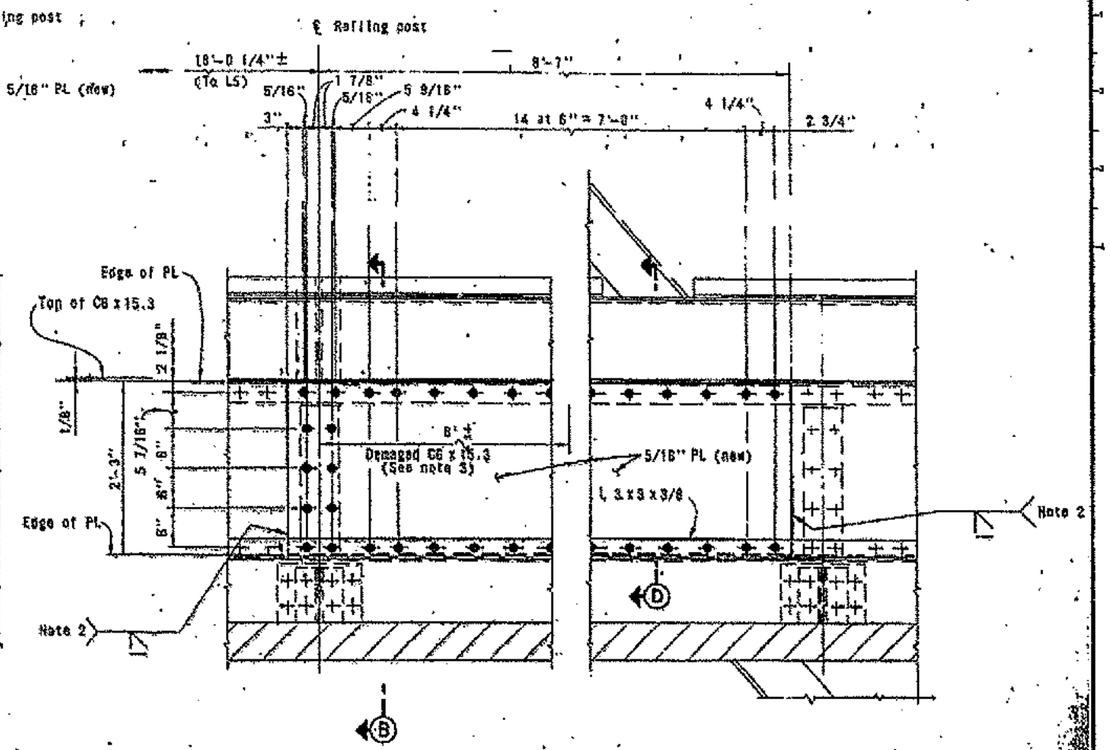

DETAIL 2
Sheet 2

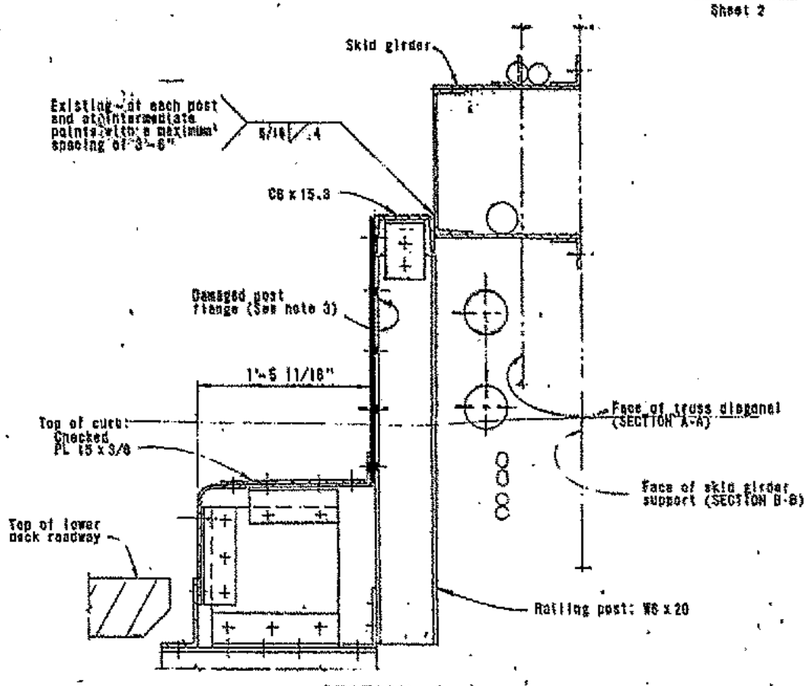

SECTION A-A
SECTION B-B
1 1/2" = 1'-0"

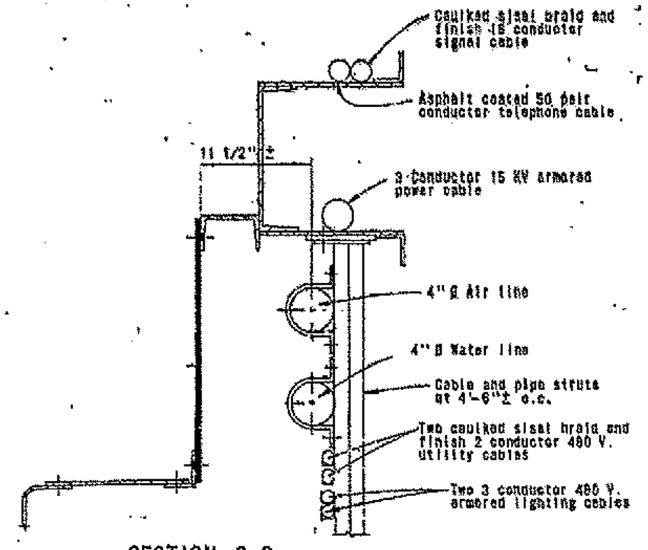

SECTION C-C
SECTION D-D
1 1/2" = 1'-0"

NOTES

1. For GENERAL NOTES, see sheet 1.
2. Cut existing PL 27 x 5/16 at this line. Remove damaged section as shown and replace with new section to restore railing to original configuration. If outstanding flange of C8 x 15.3 or outstanding leg of L 3 x 3 x 3/8 is cut during operation, cut shall be butt welded and ground smooth.
3. Replace members or straighten flange and portion of web of C8 x 15.3 and flange of W6 x 20 to original configuration in location of damaged area.
4. Remove 3/4" ø rivets and install H.S. bolts as indicated by the symbol ✚.

0 1 2 3 4 IN THS
SCALE IN INCHES ON ORIGINAL

STATE OF CALIFORNIA — BUSINESS AND TRANSPORTATION AGENCY — DEPARTMENT OF TRANSPORTATION — TOLL BRIDGE ADMINISTRATION

DESIGN BY K. Lerchman DATE
DRAWN BY B. Kuykendall DATE
SPECIFICATION V. Cadey REVIEWED O. Ramos
IN CHARGE OF DESIGN: Gilbert A. Bickwell
APPROVAL RECOMMENDED: S. Larsen
APPROVED NOVEMBER 19, 1975
Charles Seim
ASSISTANT STATE ENGINEER - BRIDGE ENGINEER

MARK	DATE	REVISION	BY	CHK.
1	4-18-75	As Built without Revision	ART	RAR

SAN FRANCISCO - OAKLAND BAY BRIDGE
SOUTH RAILING REPAIR - SPAN E10

DETAILS AND SECTIONS

SCALE UNLESS NOTED 1"=1'-0" | SHEET NO. 3 | DRAWING NO. C-U4157-33

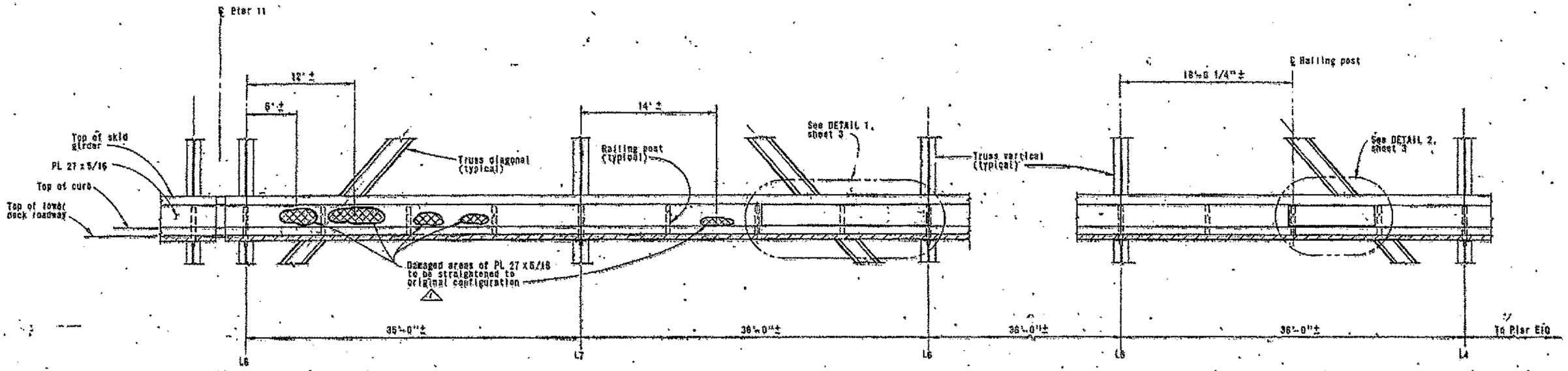

ELEVATION
(Looking South)

NOTES

1.—For GENERAL NOTES, see sheet 1.

8 THS 10 THS
0 1 2 3 4
SCALE IN INCHES ON ORIGINAL

STATE OF CALIFORNIA — BUSINESS AND TRANSPORTATION AGENCY — DEPARTMENT OF TRANSPORTATION — TOLL BRIDGE ADMINISTRATION

DESIGN BY | CHK.
DRAWN BY | CHK.
SPECIFICATIONS | ESTIMATES
IN CHARGE OF DESIGN

APPROVED NOVEMBER 19, 1973

APPROVAL RECOMMENDED

1	4-18-75	As Built with Revisions	ART

SAN FRANCISCO - OAKLAND BAY BRIDGE
SOUTH RAILING REPAIR - SPAN E10

LOWER DECK RAILING ELEVATION

SCALE NO-SCALE | SHEET NO. 2 | DRAWING NO.

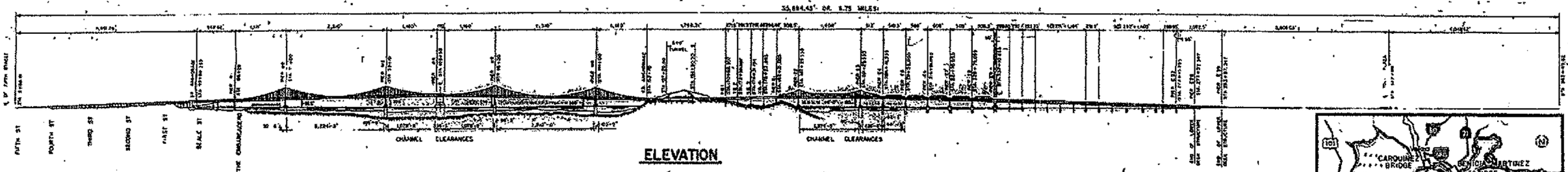

ELEVATION

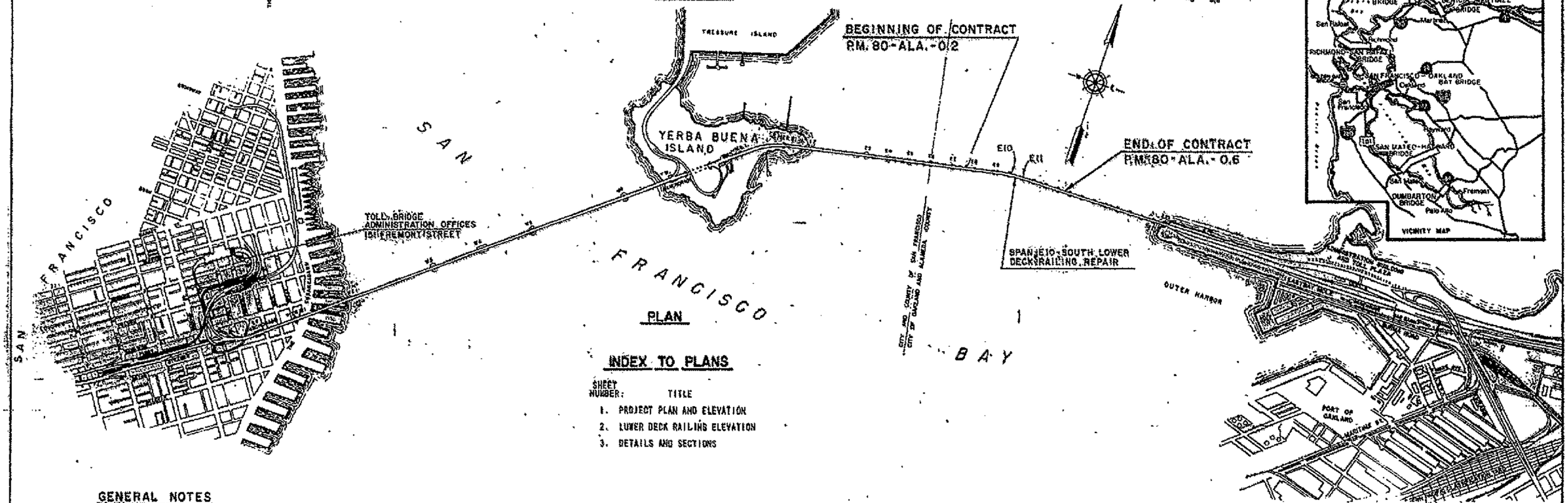

PLAN

INDEX TO PLANS

SHEET NUMBER:	TITLE
1.	PROJECT PLAN AND ELEVATION
2.	LOWER DECK RAILING ELEVATION
3.	DETAILS AND SECTIONS

GENERAL NOTES

1. When a rail section is removed and not replaced before the curb lane is open to traffic, the Contractor shall provide a temporary barrier. Temporary barrier shall provide protection for the full length of each area which has the rail section removed.
2. Dimensions shown for existing members are taken from construction drawings. The Contractor shall field verify and adjust all dimensions to fit existing conditions since minor variations are to be anticipated. (Refer to Article 2.1 of the SPECIAL PROVISIONS).
3. Contract plans show existing conditions and new materials to be used. New materials are designated by the words "new" or "install".
4. Connections shall be made with 3/4" Ø high strength (H.S.) bolts and shall include H.S. bolt, nut and washer. Beveled washers shall be furnished for connections to members with tapered flanges.

1	4-18-75	As Built without Revision	ART / FLP

STATE OF CALIFORNIA — BUSINESS AND TRANSPORTATION AGENCY — DEPARTMENT OF TRANSPORTATION — TOLL BRIDGE ADMINISTRATION

DESIGN BY: [signature]
SPECIFICATIONS BY: [signature]
ESTIMATES BY: [signature]
APPROVAL RECOMMENDED: [signature] MEMBER CHIEF ENGINEER

APPROVED NOVEMBER 19, 1973

SAN FRANCISCO-OAKLAND BAY BRIDGE
SOUTH RAILING REPAIR - SPAN E10
PROJECT PLAN AND ELEVATION

SCALE: [illegible] | SHEET NO. | DRAWING NO. [illegible]