# East Bay 288 Ft Span Truss Web Scaffold (Contract No. 04-026704)

The as-built drawings, which are contained in these CDs, are scanned from drawings of the existing structure for the convenience of the contractor and as a means to convey to the contractor the available information regarding the existing structure. It is to be understood that no claim is being made as to the accuracy or completeness of the said information and that the State of California or its officers or agents shall not be responsible for the manner in which the contractor interprets and uses this information or for the accuracy, currency or completeness of these scanned as-built drawings. The contractor shall be responsible to obtain, at the contractor's expense, any additional information that the contractor deems necessary for completely and accurately assessing the existing conditions of the structure. The contractor shall not be entitled to any compensation for any claim arising from inaccuracy or insufficiency of these as-built drawings or in anyway related to these drawings.


1. General Plan
2. Scaffold Details
3. Scaffold Details
4. Scaffold Details
5. Support and Brake Details
6. Utility Air Distribution Piping
7. Miscellaneous Details

| DIST. | COUNTY | ROUTE | POST MILES—TOTAL PROJECT | SHEET NO. | TOTAL SHEETS |
|---|---|---|---|---|---|
| 04 | Ala | 80 | 0.3/1.1 | 1 | 7 |

C 8066
CHIEF, OFFICE OF BRIDGE MAINTENANCE — REGISTERED CIVIL ENGINEER NUMBER

Russell O. Lightfoot
CHIEF, OFFICE OF OFFICE ENGINEER
REGISTERED CIVIL ENGINEER NO. 8854

DATE APPROVED July 5, 1983

INDEX OF SHEETS


Sheet No. 1 Title and Location Map
" " 2-4 Scaffold Details
" " 5 Support and Brake Details
" " 6 Utility Air Distribution Piping
" " 7 Miscellaneous Details


STATE OF CALIFORNIA

# DEPARTMENT OF TRANSPORTATION

# PROJECT PLANS FOR CONSTRUCTION ON STATE HIGHWAY

# IN ALAMEDA COUNTY IN OAKLAND

# AT THE SAN FRANCISCO-OAKLAND BAY BRIDGE

To Be Supplemented by Standard Plans Dated January, 1981

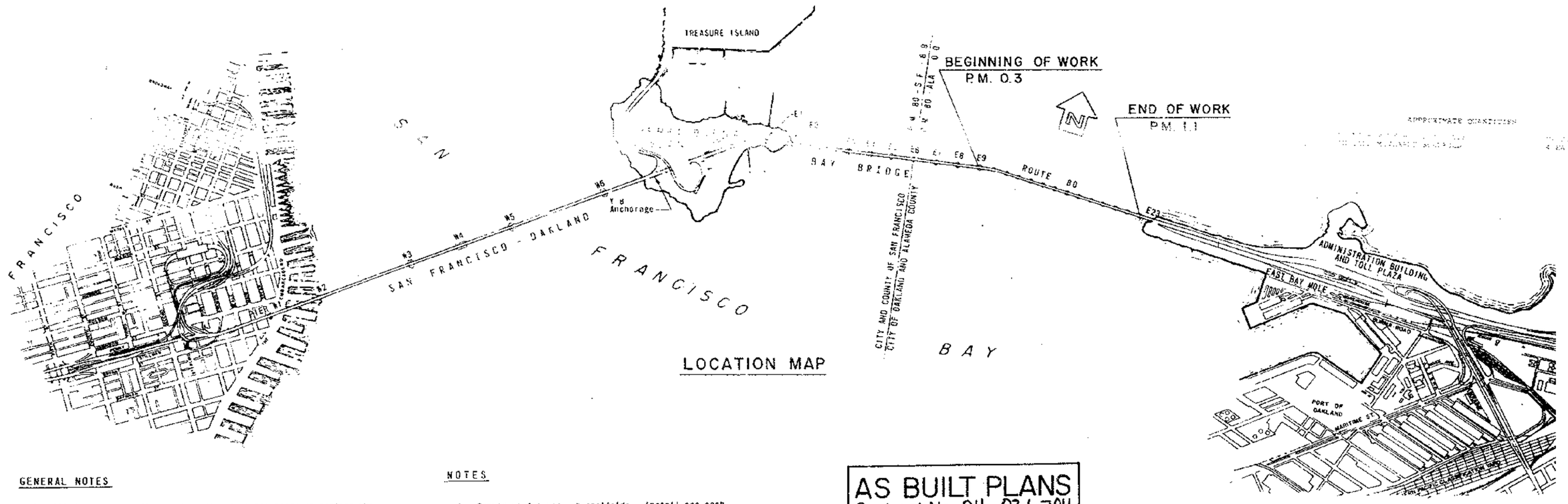


LOCATION MAP

## GENERAL NOTES

1. All dimensions of the existing structure necessary to perform the work shown on these sheets shall be verified by the Contractor in the field. Dimensions shown for the existing structure are taken from construction drawings. The Contractor shall verify field dimensions and shall be responsible for finished structures fitting existing conditions since minor variations are to be anticipated.

## NOTES

1. Construct 4 truss web scaffolds. Install one each at north and south sides of bridge at Piers E9 and E16.

AS BUILT PLANS
Contract No. 04-026704
Date Completed 5-24-85
Document No.

04-026704
5-24-85
Without revision
J. Vallas
[illegible] 10-9-85

Contract No. 04-026704

| | | | | | |
|---|---|---|---|---|---|
| S. Lorca C12732 | DESIGN | J. Yee | R. W. Mitchell | LOAD FACTOR DESIGN | LIVE LOADING HS20-44 AND ALTERNATIVE AND PERMIT DESIGN LOAD |
| R. W. Mitchell C 8695 | DETAILS | J. Yee | R. W. Mitchell | LAYOUT | |
| | QUANTITIES | R. W. Mitchell | | SPECIFICATIONS | U.E. Smith 3941 |

State of CALIFORNIA DEPARTMENT OF TRANSPORTATION

STRUCTURES - DESIGN
J.V. C 21176
PROJECT ENGINEER — REGISTERED CIVIL ENGINEER NO.

BRIDGE NO. 33-25
POST MILE 1.15

SAN FRANCISCO - OAKLAND BAY BRIDGE
EAST BAY 288 FT. SPAN TRUSS WEB SCAFFOLD
GENERAL PLAN

ORIGINAL SCALE IN INCHES FOR REDUCED PLANS 0 1 2 3

CU 04 265
WO 026701

Shaded print bearing earlier revision dates

REVISION DATES (PRELIMINARY STAGE ONLY)

SHEET 1 OF 7

| DIST. | COUNTY | ROUTE | POST MILES—TOTAL PROJECT | Sheet No. | Total Sheets |
|---|---|---|---|---|---|
| 04 | ALA | 80 | 0.57/1.1 | 2 | 7 |

S. Larsen C12732
DESIGN ENGINEER — REGISTERED CIVIL ENGINEER NUMBER
DATE APPROVED July 5, 1983

| | |
|---|---|
| Contract No. | 04-026704 |
| Date Accepted | 5-24-85 |
| Job Book | Without revision |
| Resident Engineer | J. Vallas |
| Revised By | U. Juurma Date 10-7-85 |

For modifications to landing for top platform on north side scaffolds, see sheet 7.

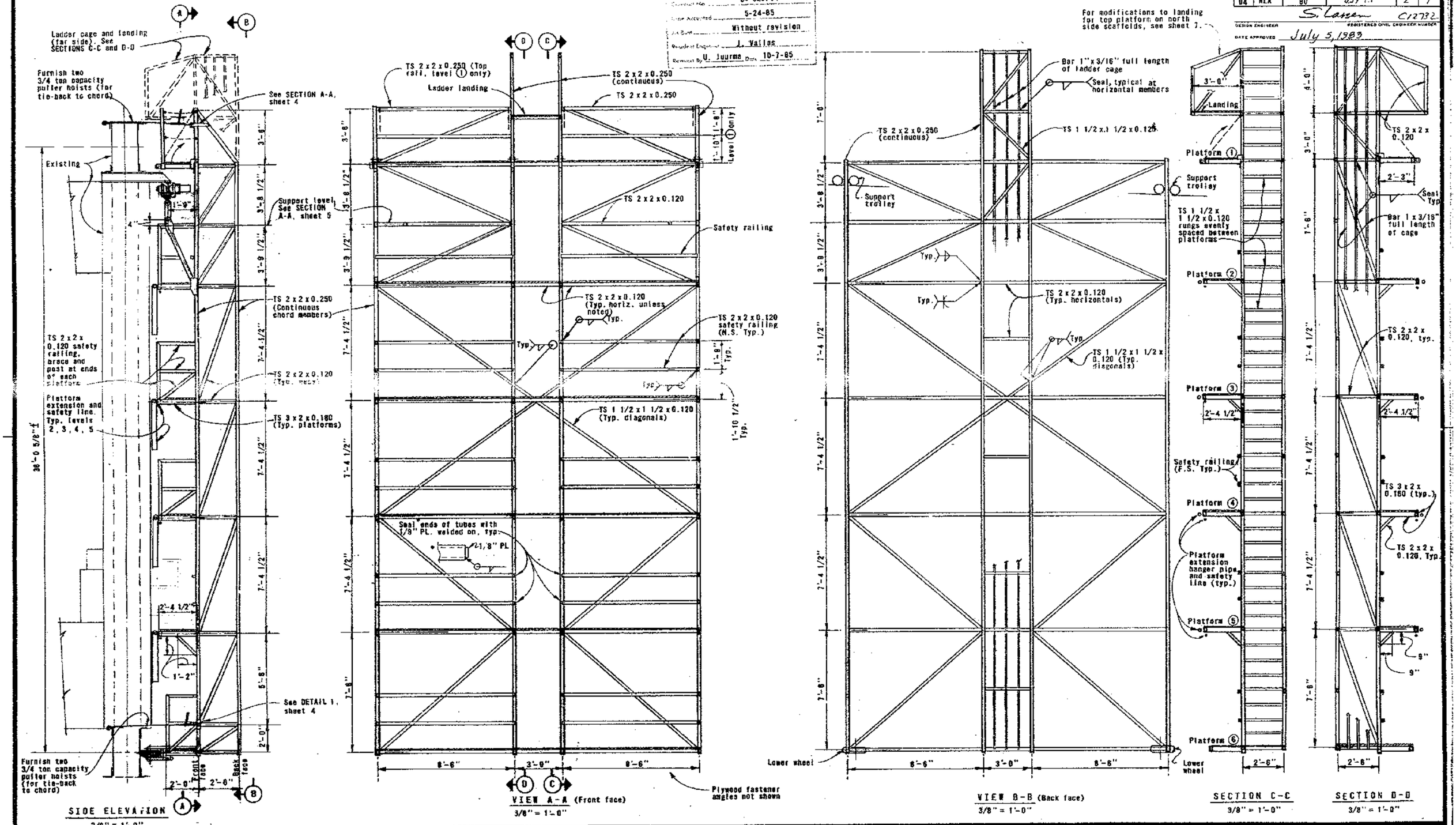


| | | | |
|---|---|---|---|
| DESIGN | By Jack on. Yee | Checked R. W. Wilcox | |
| DETAILS | By J. Yee | Checked R. W. Wilcox | |
| QUANTITIES | By R. W. Wilcox | Checked | |

State of CALIFORNIA DEPARTMENT OF TRANSPORTATION

STRUCTURES - DESIGN
J. Y. — PROJECT ENGINEER
C21176 — REGISTERED CIVIL ENGINEER NO.

BRIDGE NO. 33-25
POST MILE 1.15

SAN FRANCISCO - OAKLAND BAY BRIDGE
EAST BAY 288 FT. SPAN TRUSS WEB SCAFFOLD
SCAFFOLD DETAILS

ORIGINAL SCALE IN INCHES FOR REDUCED PLANS 0 1 2 3

CU 04 205
WO 926761

Disregard prints bearing earlier revision dates

REVISION DATES (PRELIMINARY STAGE ONLY)

SHEET 2 OF 7

| DIST. | COUNTY | ROUTE | POST MILES—TOTAL PROJECT | SHEET NO. | TOTAL SHEETS |
|---|---|---|---|---|---|
| 04 | ALA | 80 | 0.9/1.1 | 3 | 7 |

DESIGN ENGINEER S. Lamen REGISTERED CIVIL ENGINEER NUMBER C12732

DATE APPROVED July 5, 1983

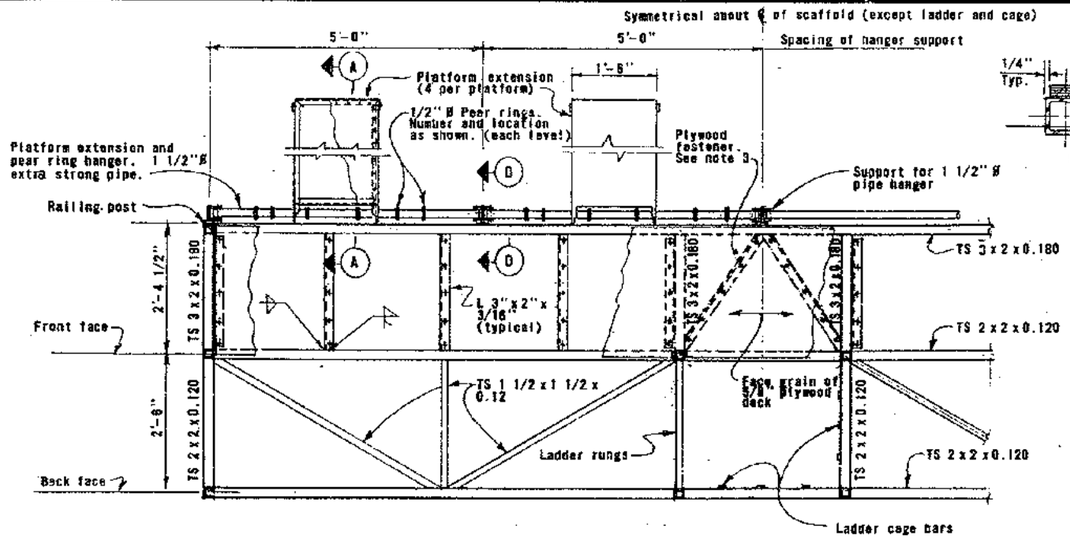


PLAN - AT PLATFORMS ②, ③, ④ AND ⑤

3/4" = 1'-0"

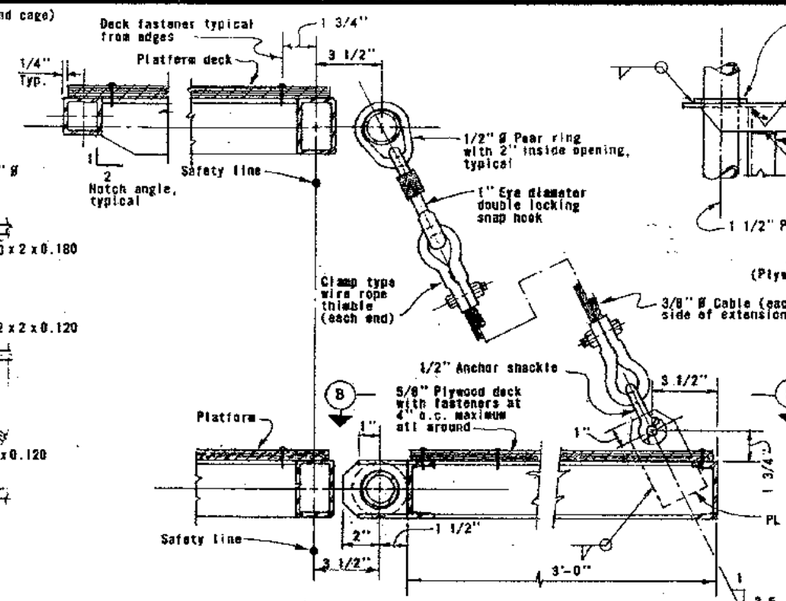


SECTION A-A

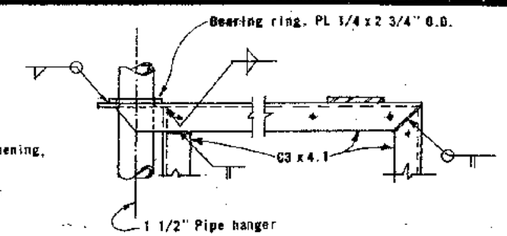


VIEW B-B

(Plywood deck not shown)

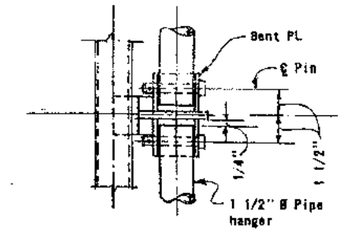


VIEW C-C

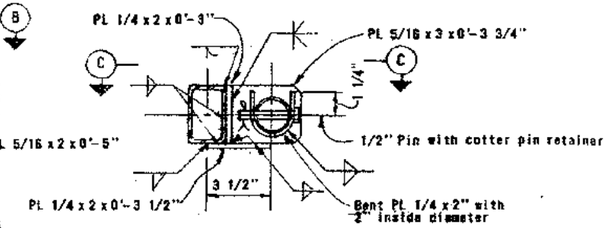


SECTION D-D

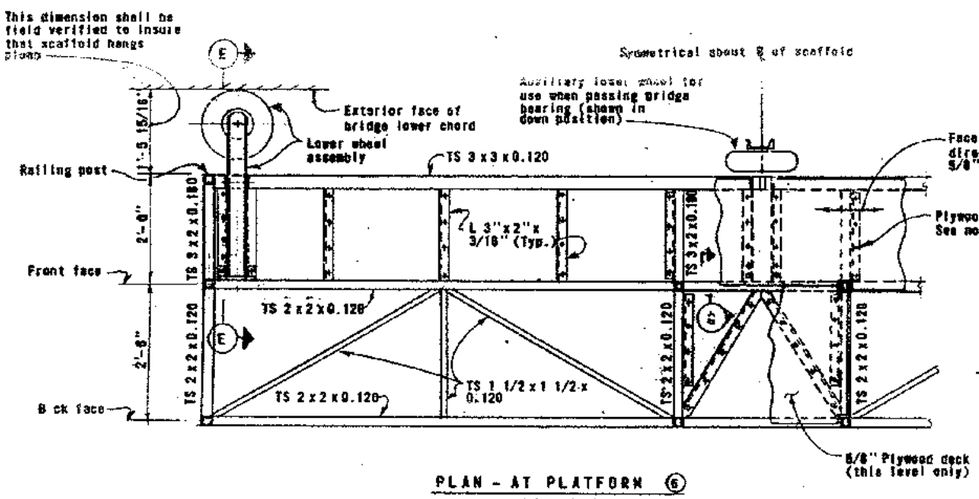


PLAN - AT PLATFORM ⑥

3/4" = 1'-0"

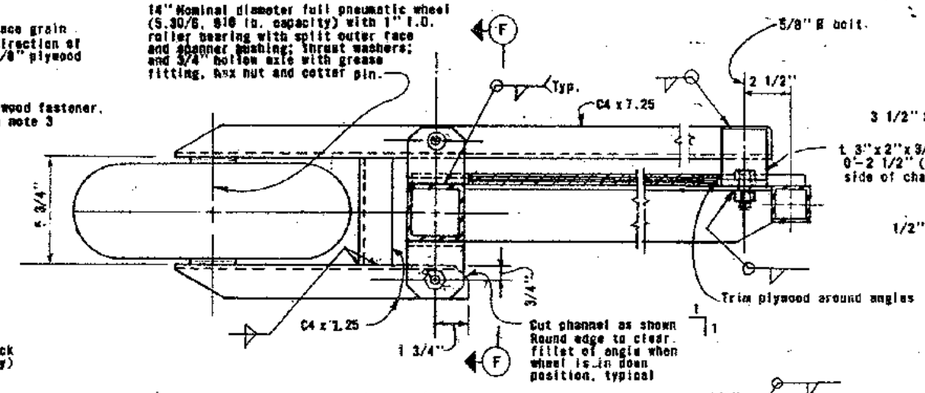


SECTION E-E

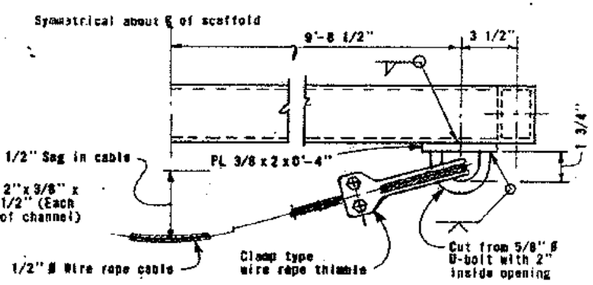


SAFETY LINE DETAILS

(Front view at platforms ②, ③, ④ and ⑤)

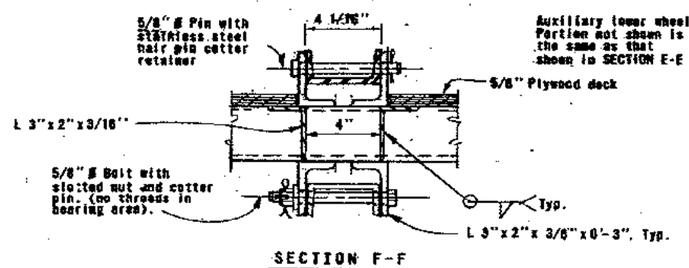


SECTION F-F

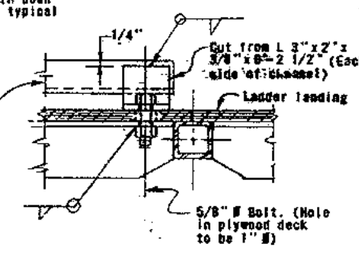


SECTION G-G

(When lower auxiliary wheel is in an up position)

## NOTES

1. Unless noted, all details shown are on 3 inch equal to one foot scale.
2. Unless otherwise shown, all connections are continuously welded with 3/16" weld.
3. 5/8" plywood decking shall be fastened to 3 x 2 angles at places indicated with #10 - 24 Type F pan head self-tapping screws.

| | |
|---|---|
| Contract No. | 04-028704 |
| Date Accepted | 5-24-85 |
| As Built | Without revision |
| Resident Engineer | J. Vallas |
| Revision by | U. Juurma Date 10-7-85 |

| | By | Checked |
|---|---|---|
| DESIGN | Jack M. Yee | R. W. Whitt |
| DETAILS | J. Yee | R. W. Whitt |
| QUANTITIES | R. W. Whitt | |

State of CALIFORNIA DEPARTMENT OF TRANSPORTATION

STRUCTURES - DESIGN

J. Y. C21176

PROJECT ENGINEER REGISTERED CIVIL ENGINEER NO.

BRIDGE NO. 33-25

POST MILE 1.15

SAN FRANCISCO - OAKLAND BAY BRIDGE
EAST BAY 288 FT. SPAN TRUSS WEB SCAFFOLD

SCAFFOLD DETAILS

ORIGINAL SCALE IN INCHES FOR REDUCED PLANS 0 1 2 3

CU 04 205
WO 028701

Disregard prints bearing earlier revision dates

REVISION DATES (PRELIMINARY STAGE ONLY)

SHEET 9 OF 7

| DIST. | COUNTY | ROUTE | POST MILES—TOTAL PROJECT | SHEET NO. | TOTAL SHEETS |
|---|---|---|---|---|---|
| 04 | ALA | 80 | 0.3/1.1 | 4 | 7 |

DESIGN ENGINEER S. Larsen REGISTERED CIVIL ENGINEER NUMBER C12732

DATE APPROVED July 5, 1983

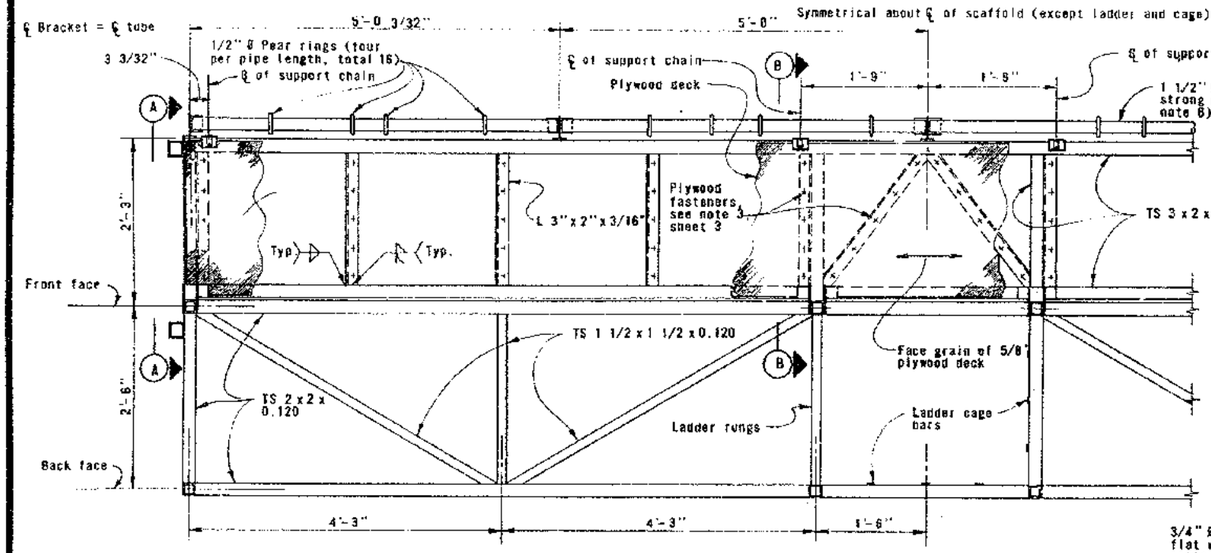


PLAN - AT PLATFORM 1

Scale: 1" = 1'-0"

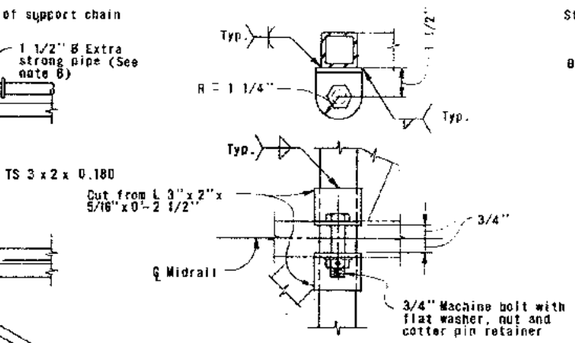


DETAIL 1 - LOWER TIE-OFF

Total 2 per scaffold
See sheet 2 for location

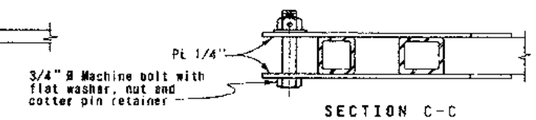


SECTION C-C

(Upper tie-off)

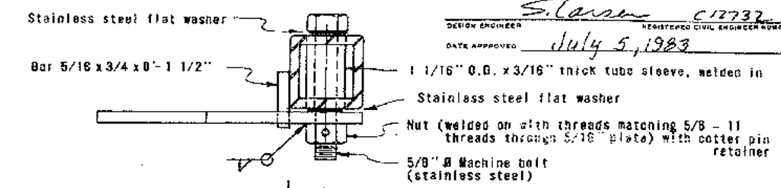


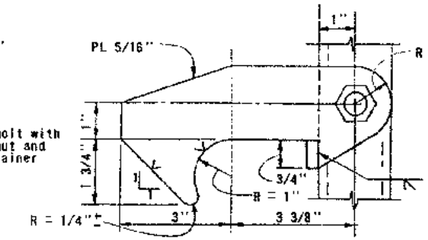


DETAIL 2 - LOCKING DEVICE

One as shown; one opposite hand
Scale: 6" = 1'-0"

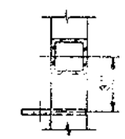

SECTION D-D

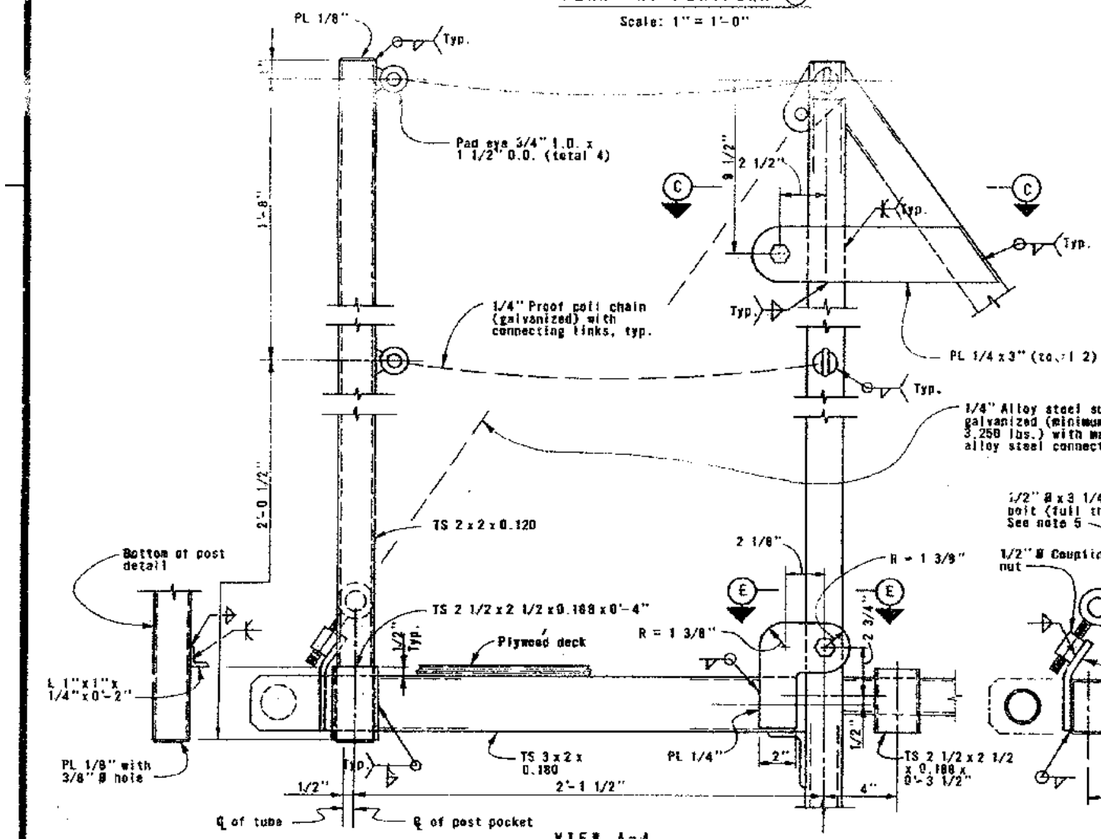


VIEW A-A

See note 4

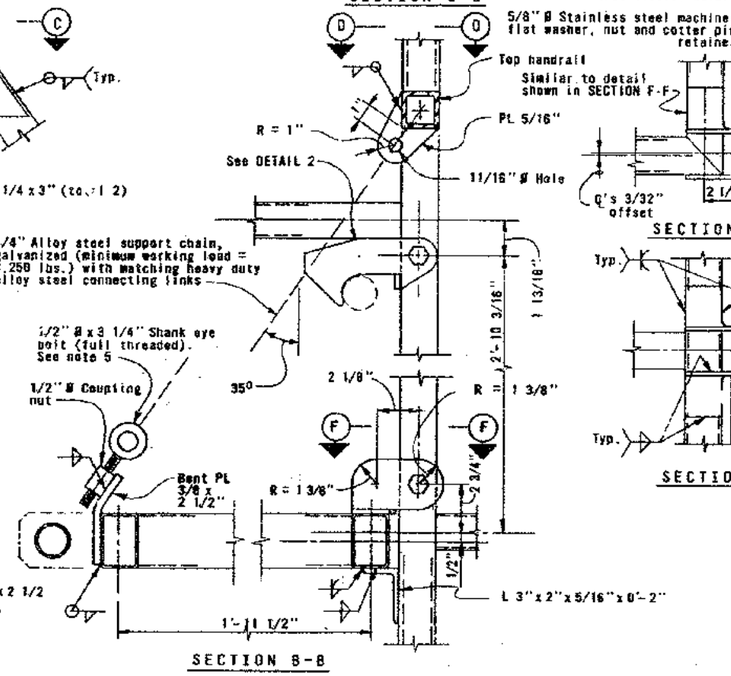


SECTION B-B

See note 4

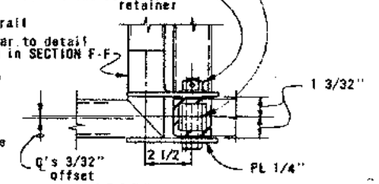


SECTION E-E

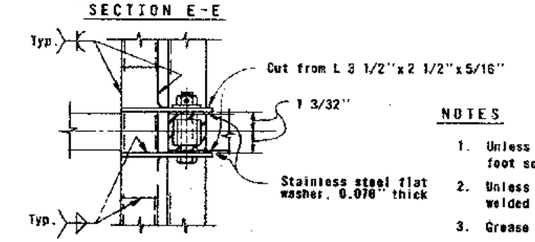


SECTION F-F

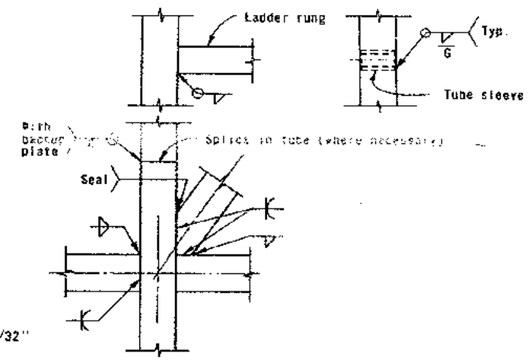


TYPICAL WELDING DETAILS

At structural tubes

## NOTES

1. Unless noted, all details shown are on 3 inch equal to one foot scale.
2. Unless otherwise shown, all connections are continuously welded with 3/16" weld.
3. Grease hinge and pivot bolts and sleeves with Moly EP grease.
4. Unless noted, details are similar at hinges and support chains shown in SECTIONS E-E and F-F.
5. Adjust eye bolts so that chains are taut just as platform seats fully.
6. Details of the pipe hanger and brackets are shown on sheet 3.

| | |
|---|---|
| Contract No. | 04-028704 |
| Date Accepted | 5-24-85 |
| As Built | Without revision |
| Resident Engineer | J. Vallas |
| Revision By | U. Juurma Date 10-7-85 |

| | By | Checked |
|---|---|---|
| DESIGN | J. Yee | R. W. Wheel |
| DETAILS | J. Yee | R. W. Wheel |
| QUANTITIES | R. W. Wheel | |

State of CALIFORNIA DEPARTMENT OF TRANSPORTATION

STRUCTURES - DESIGN

PROJECT ENGINEER J. Y. REGISTERED CIVIL ENGINEER NO. C 21176

BRIDGE NO. 33-25

POST MILE 1.15

SAN FRANCISCO - OAKLAND BAY BRIDGE
EAST BAY 288 FT. SPAN TRUSS WEB SCAFFOLD

SCAFFOLD DETAILS

ORIGINAL SCALE IN INCHES FOR REDUCED PLANS 0 1 2 3

CU 04 205
WO 028701

Disregard prints bearing earlier revision dates

REVISION DATES (PRELIMINARY STAGE ONLY)

SHEET 4 OF 7

| DIST. | COUNTY | ROUTE | POST MILES—TOTAL PROJECT | SHEET No. | TOTAL SHEETS |
|---|---|---|---|---|---|
| 04 | ALA | 80 | 0.3 / 1.1 | 5 | 7 |

DESIGN ENGINEER S. Lassen REGISTERED CIVIL ENGINEER NUMBER C17732

DATE APPROVED July 5, 1983

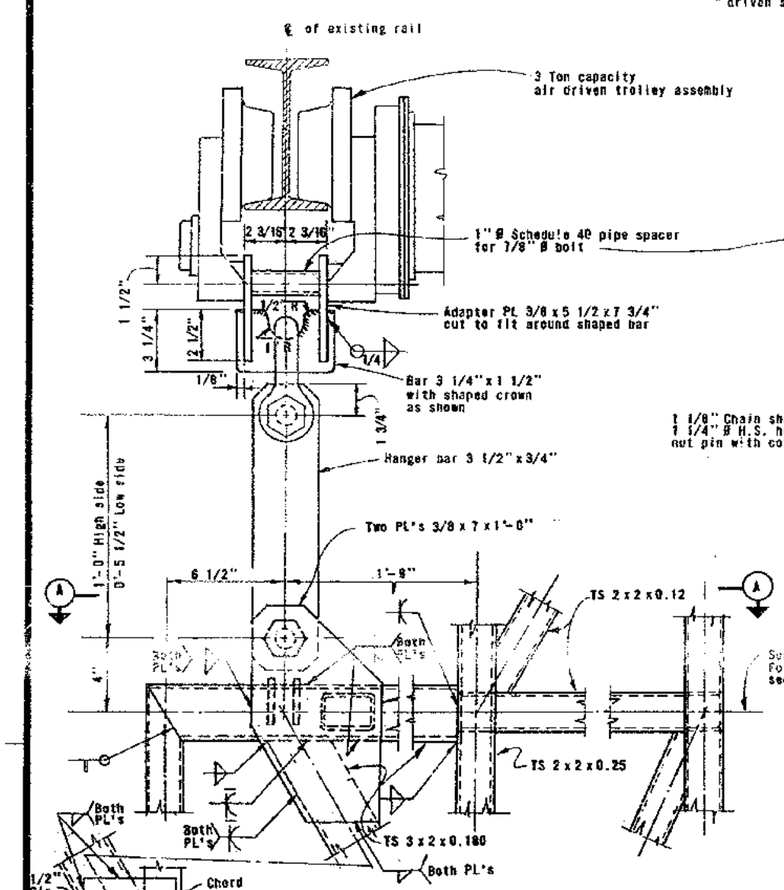


SIDE VIEW OF SUPPORTS

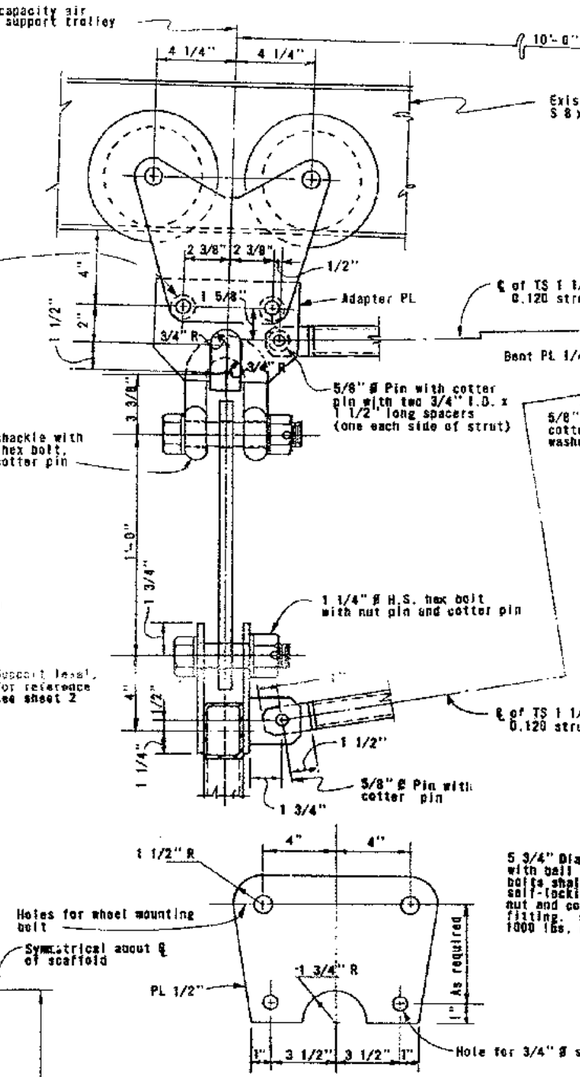


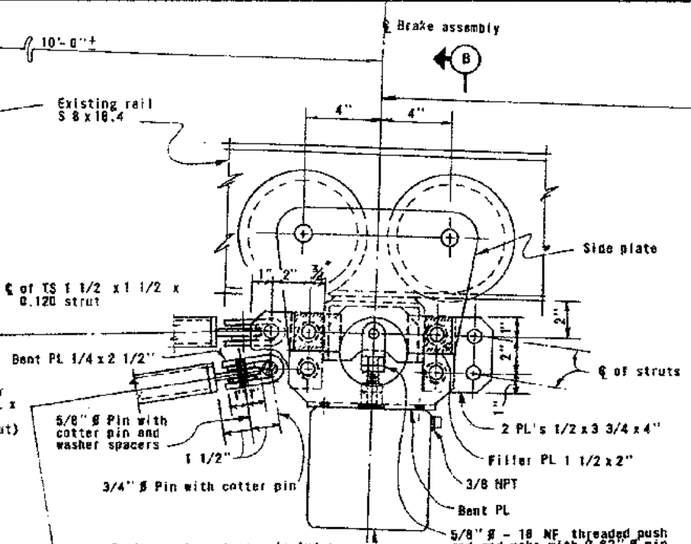


FRONT VIEW OF SUPPORT AND BRAKE SYSTEM

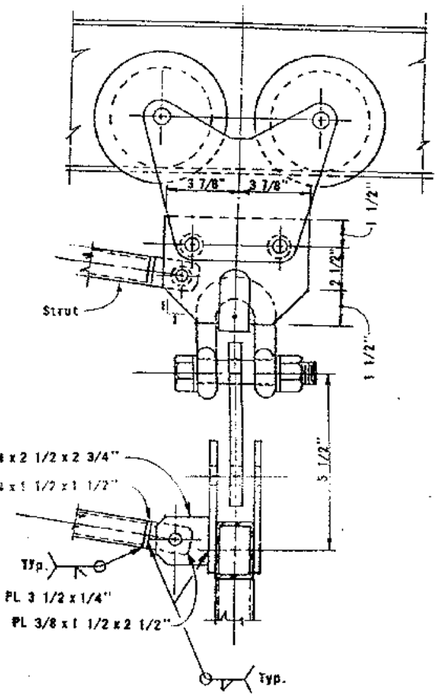





VIEW A-A




SIDE PLATE FOR BRAKE

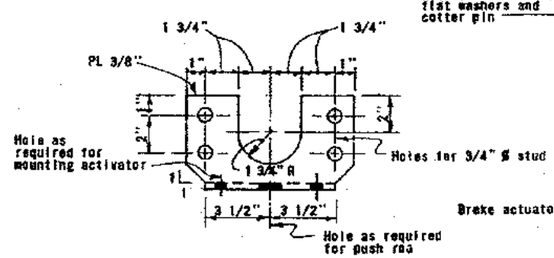


BENT PLATE FOR BRAKE

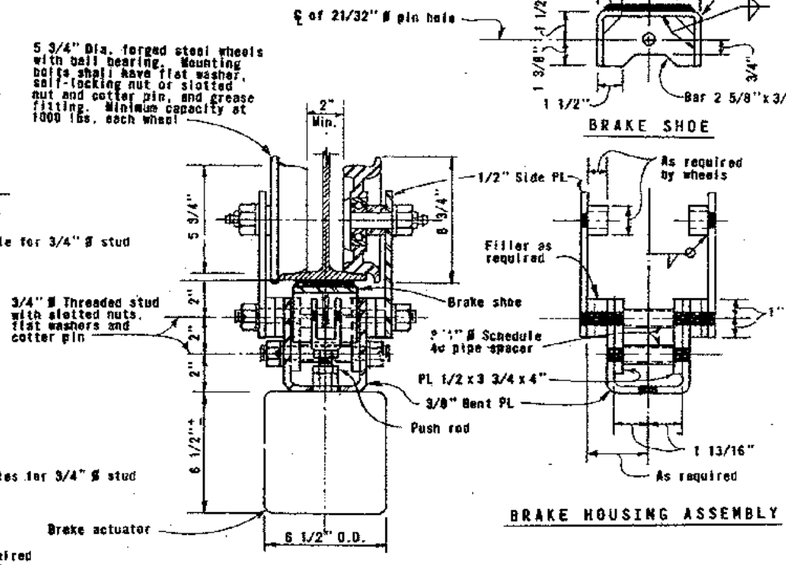


SECTION B-B

BRAKE ASSEMBLY

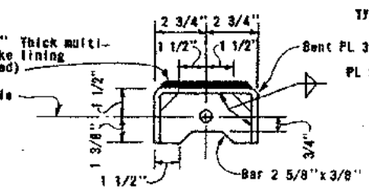


BRAKE SHOE




BRAKE HOUSING ASSEMBLY

NOTES

1. All details shown are on scale of 3" = 1'-0".
2. Dimensions and details shown for one item apply to other similar items.

Contract No. 04-026704
Date Accepted 5-24-85
As Built Without revision
Resident Engineer J. Vallas
Revised By U. Jeuma Date 10-8-85

| | | |
|---|---|---|
| DESIGN | By Jack M. Yee | Checked R. W. Welch |
| DETAILS | By J. Yee | Checked R. W. Welch |
| QUANTITIES | By R. W. Welch | Checked R. W. Welch |

State of CALIFORNIA DEPARTMENT OF TRANSPORTATION

STRUCTURES - DESIGN

J.Y. C21176
PROJECT ENGINEER REGISTERED CIVIL ENGINEER NO.

BRIDGE NO. 33-25
POST MILE 1.15

SAN FRANCISCO - OAKLAND BAY BRIDGE
EAST BAY 288 FT. SPAN TRUSS WEB SCAFFOLD
SUPPORT AND BRAKE DETAILS

ORIGINAL SCALE IN INCHES FOR REDUCED PLANS 0 1 2 3

CU 04 206
WO 026701

Disregard prints bearing earlier revision dates

REVISION DATES (PRELIMINARY STAGE ONLY)

SHEET 5 OF 7

| DIST. | COUNTY | ROUTE | POST MILES—TOTAL PROJECT | SHEET NO. | TOTAL SHEETS |
|---|---|---|---|---|---|
| 04 | ALA | 80 | 0.3/1.1 | 6 | 7 |

S Larsen C17732

July 5, 1985

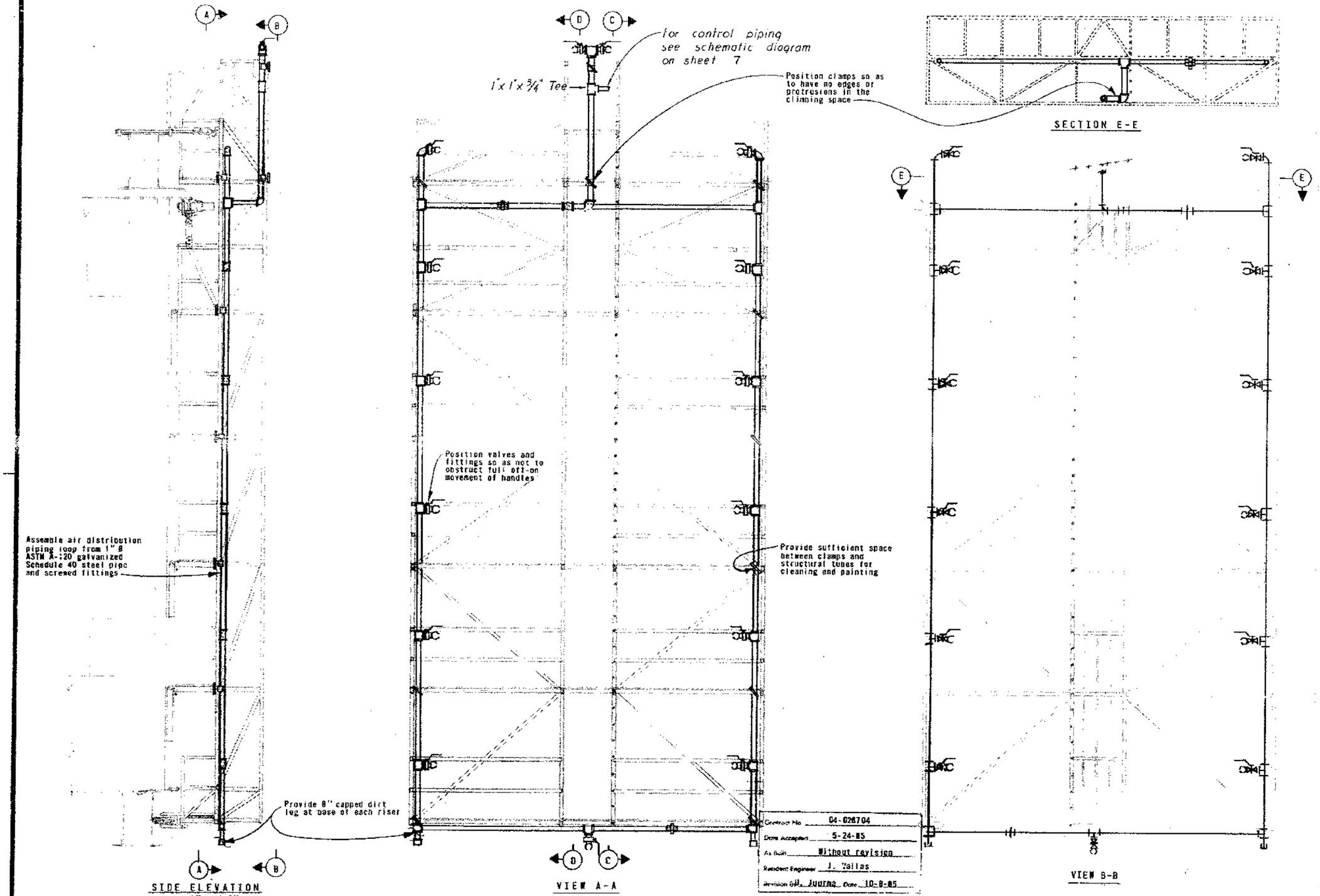


Contract No 04-026704
Date Accepted 5-24-85
As Built Without revision
Resident Engineer J. Vallas
Revision by H. Juurag Date 10-8-85

AS BUILT PLANS
Contract No. 04-026704

| | | |
|---|---|---|
| DESIGN | Thomas A. Pulfrey | Checked |
| DETAILS | Thomas A. Pulfrey | Checked |
| QUANTITIES | By | Checked |

ORIGINAL SCALE IN INCHES FOR REDUCED PLANS 0 1 2 3

State of CALIFORNIA DEPARTMENT OF TRANSPORTATION

STRUCTURES - DESIGN

J.H. C 21176
PROJECT ENGINEER REGISTERED CIVIL ENGINEER NO.

33-25
POST MILE
1.15

CU 94 205
WO 026701

Discard prints bearing earlier revision dates

SAN FRANCISCO - OAKLAND BAY BRIDGE
EAST BAY 288 FT. SPAN TRUSS WEB SCAFFOLD
UTILITY AIR DISTRIBUTION PIPING

REVISION DATES (PRELIMINARY STAGE ONLY)

SHEET 6 OF -

| DIST. | COUNTY | ROUTE | POST MILE | SHEET | TOTAL SHEETS |
|---|---|---|---|---|---|
| 04 | Ala | 80 | 0.3/1.1 | 7 | 7 |

DATE APPROVED July 5, 1983

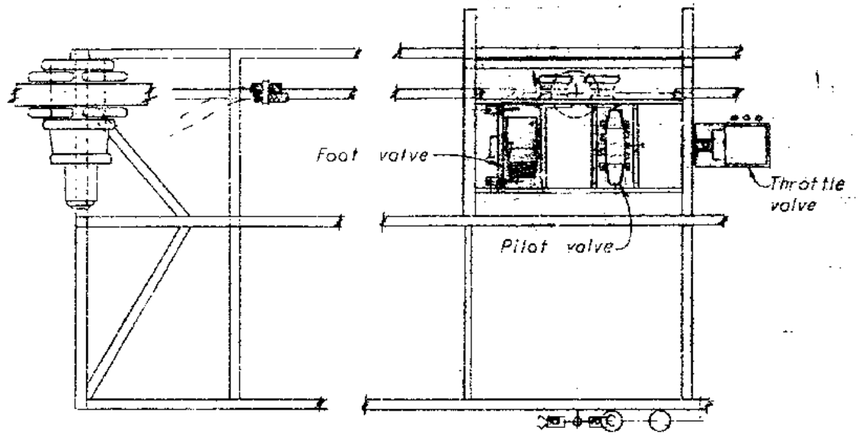


PART PLAN - COMPONENTS AND CONTROLS

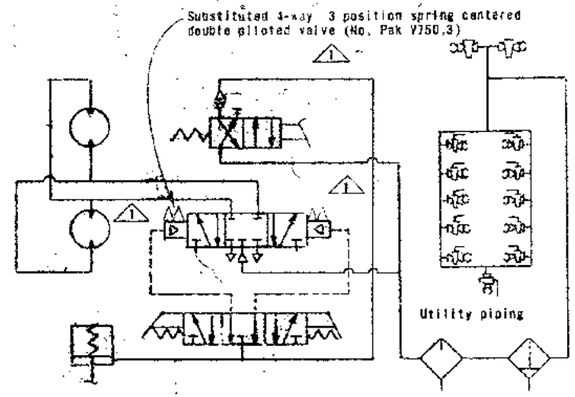


SCHEMATIC-UTILITY-PROPULSION AND CONTROL PIPING

No Scale

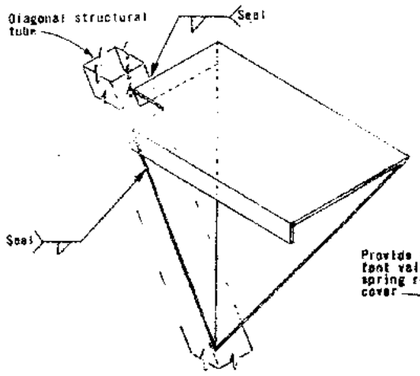


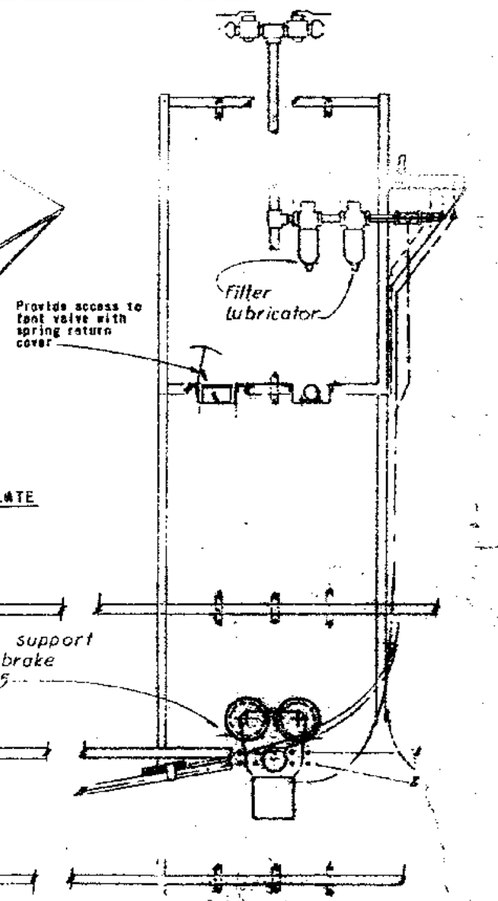


THROTTLE VALVE SUPPORT PLATE

3" = 1'-0"

PART ELEVATION - TYPICAL FOR PROPULSION COMPONENTS

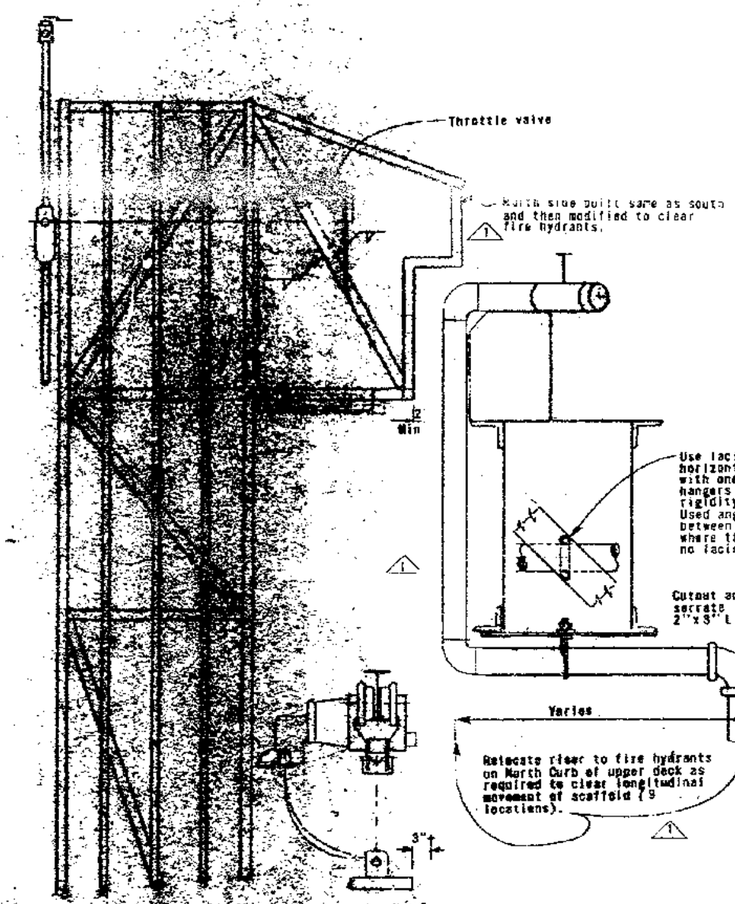


ELEVATION - LOOKING WEST

1" = 1'-0"

## MODE OF OPERATION

When the truss-web scaffold distribution piping is connected to the bridge air system by means of a 3/4" supply hose (90 psig), a single operator shall be able to move the scaffold in an Easterly or Westerly direction by depressing a foot valve and moving a hand throttle to and from its normally closed neutral position.

The following shall occur when the foot valve is depressed:

1. Air is transmitted to release the brake and supply air to the throttle valve.
2. Moving the hand control of the throttle valve in turn operates the pilot valve causing it to move so that the proper port alignment allows air to flow to the motors.
3. When the throttle control handle is returned to the neutral position, the pilot valve cuts off air to the motors which stop.
4. When the foot valve is released air to the brake and throttle valve is cut off, this causes the spring loaded brake to set and the throttle valve becomes inoperative. The foot valve has a dead man safety control which causes the brake to set whenever the pedal is released.

## LEGEND

- Single acting piston with spring return (brake)
- Reversable fixed displacement pneumatic motor
- 4-Way pedal operated spring return foot valve
- 4-Way double pilot operated valves, spring centered.
- 4-Way lever operated throttle valve
- Lubricator with manual drain
- Filter
- 1" diameter plug cock with twist lock connection

| | |
|---|---|
| Contract No. | 04-026704 |
| Date Accepted | 5-24-85 |
| As Built | J. Vailas |
| Resident Engineer | with revisions |
| Revised by | U. Jugrma 10-9-85 |

AS BUILT PLANS
Contract No. 04-026704

DESIGN
DETAILS
QUANTITIES

State of CALIFORNIA
DEPARTMENT OF TRANSPORTATION

STRUCTURES - DESIGN
J.Y.

BRIDGE NO. 33-25
POST MILE 1.15

SAN FRANCISCO - OAKLAND BAY BRIDGE
EAST BAY 288 FT. SPAN TRUSS WEB SCAFFOLD

MISCELLANEOUS DETAILS

CU
WO 026201

Disregard prints bearing earlier revision dates

7/5/83