Earthquake Repairs - Pier E18 Thru E22 (Contract No. 04-190054)

The as-built drawings, which are contained in these CDs, are scanned from drawings of the existing structure for the convenience of the contractor and as a means to convey to the contractor the available information regarding the existing structure. It is to be understood that no claim is being made as to the accuracy or completeness of the said information and that the State of California or its officers or agents shall not be responsible for the manner in which the contractor interprets and uses this information or for the accuracy, currency or completeness of these scanned as-built drawings. The contractor shall be responsible to obtain, at the contractor's expense, any additional information that the contractor deems necessary for completely and accurately assessing the existing conditions of the structure. The contractor shall not be entitled to any compensation for any claim arising from inaccuracy or insufficiency of these as-built drawings or in anyway related to these drawings.

1. General Plan
2. Repairs for Piers E18 through E23
3. Pier E23-Stringer Seat Modifications
4. Title Sheet

STATE OF CALIFORNIA
BUSINESS AND TRANSPORTATION AGENCY

DEPARTMENT OF TRANSPORTATION

PROJECT PLANS FOR CONSTRUCTION ON STATE HIGHWAY

DIST.	COUNTY	ROUTE	POST MILES TOTAL PROJECT	SHEET NO.	TOTAL SHEETS
04	ALA	80	0.7/1.1	1	3

CHIEF-OFFICE OF STRUCTURES MAINTENANCE AND INVESTIGATION

PLANS APPROVAL DATE

REGISTERED PROFESSIONAL ENGINEER IKUO NAGAI No. C12212 Exp. 3-31-90 CIVIL STATE OF CALIFORNIA

INDEX TO PLANS

SHEET NUMBER	TITLE
1.	General Plan
2.	Repairs for Piers E18 through E22
3.	Pier E23 - Stringer Seat Modifications

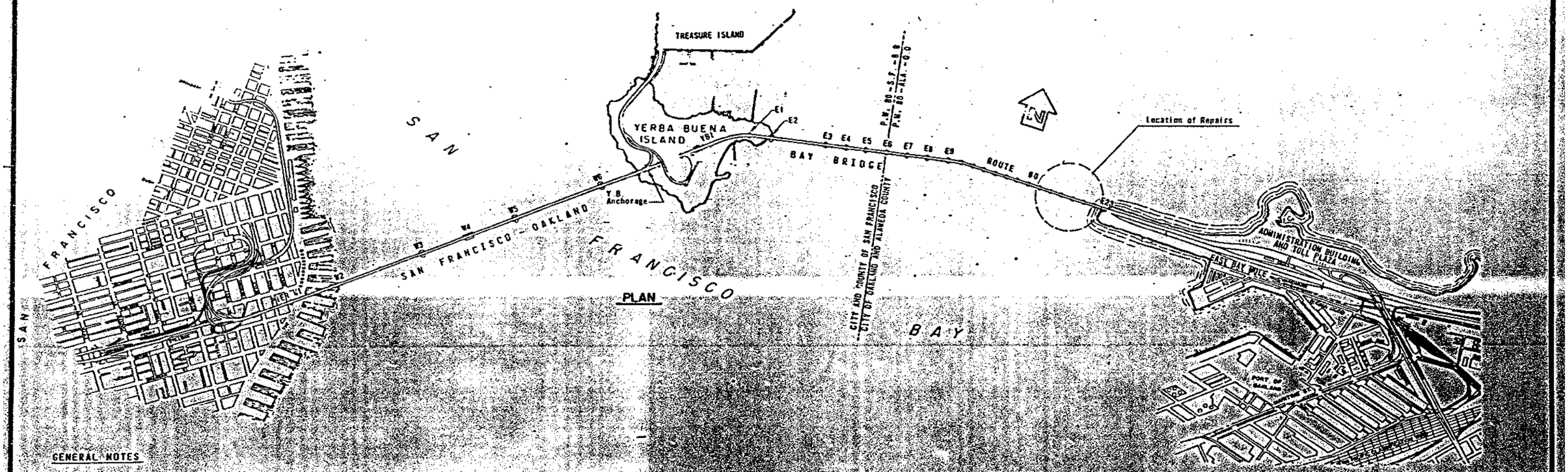

GENERAL NOTES

1. All dimensions of the existing structure necessary to perform the work shown on these sheets shall be verified by the Contractor in the field. Dimensions shown for the existing structure are taken from construction drawings. The Contractor shall verify field dimensions and shall be responsible for finished structures fitting existing conditions since minor variations are to be anticipated.

04-190054
2/20/90
BUILT
DATE 6/18/90

DESIGN	By R.E. Keim	Checked R.R. Bridwell			
DETAILS	By R.E. Keim	Checked R.V. White	LAYOUT	By	Checked
QUANTITIES	By	Checked	SPECIFICATIONS	By	Plans and Specs Compared

State of CALIFORNIA DEPARTMENT OF TRANSPORTATION

STRUCTURES MAINTENANCE AND INVESTIGATIONS

PROJECT ENGINEER REGISTERED CIVIL ENGINEER NO.

BRIDGE NO. 33-25
POST MILE 0.7/1.1

SAN FRANCISCO - OAKLAND BAY BRIDGE
EARTHQUAKE REPAIRS
GENERAL PLAN

DS OSM 1234 (7/86)

ORIGINAL SCALE IN INCHES FOR REDUCED PLANS

CU 59 023
EA 04-190054

Disregard prints bearing earlier revision dates

REVISION DATES (PRELIMINARY STAGE ONLY)

SHEET 1 OF 3

DIST.	COUNTY	ROUTE	POST MILES TOTAL PROJECT	SHEET NO.	TOTAL SHEETS
04	ALA	80	0.7/1.1	2	3

REGISTERED ENGINEER - CIVIL

PLANS APPROVAL DATE

REGISTERED PROFESSIONAL ENGINEER No. C 20867 Exp. 12-31-91 CIVIL STATE OF CALIFORNIA

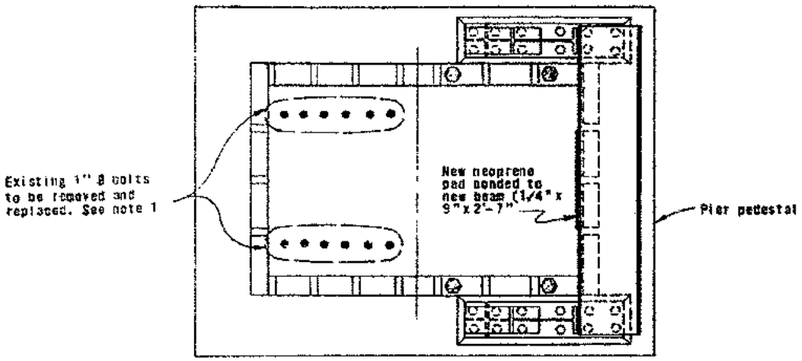

SECTION A-A

Two pier pedestals at each pier
Scale: 1/2" = 1'-0"

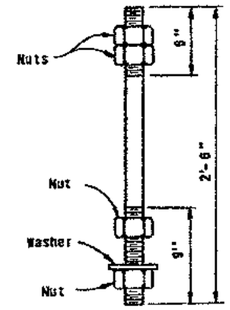

2" ø A325 ROD

Scale: 1 1/2" = 1'-0"

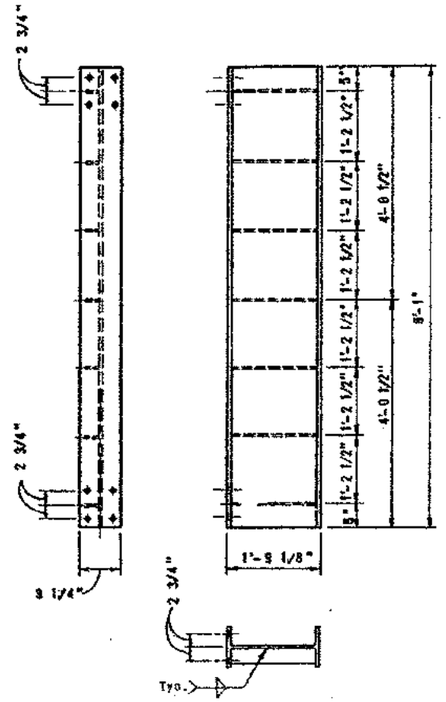

EARTHQUAKE RESTRAINER BEAM

W 21 x 68

Scale: 3/4" = 1'-0"

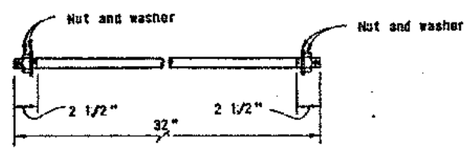

EARTHQUAKE RESTRAINER ROD

1" ø A325

Scale: 1 1/2" = 1'-0"

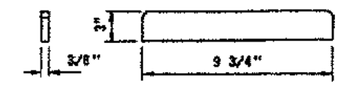

3/8" STIFFENER PLATE

Scale: 3" = 1'-0"

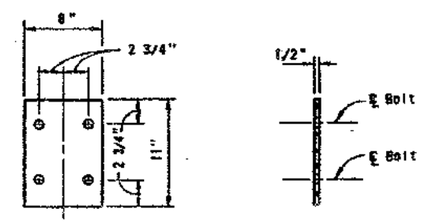

1/2" PLATE

Scale: 1 1/2" = 1'-0"

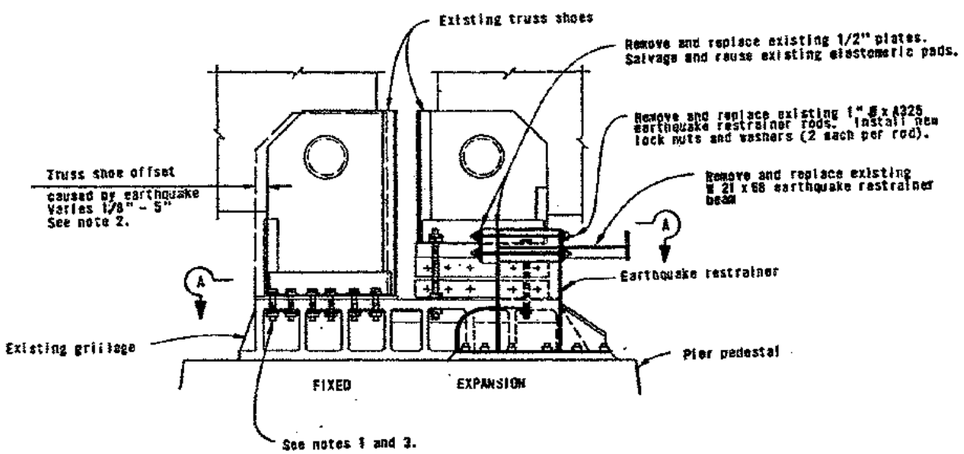

ELEVATION

Scale: 1/2" = 1'-0"

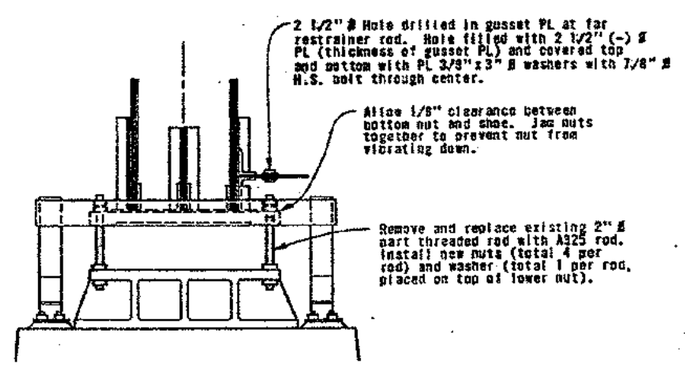

END VIEW

Scale: 1/2" = 1'-0"

MATERIALS LIST	
Item	Each
Earthquake restrainer beam	10
Earthquake restrainer rod	80
Bolt, 1" ø x 8", A325	120
Plate, 1/2" x 8" x 11"	20
Rod, 2" ø x 32"	40
Neoprene pad, 1/4" x 8" x 2'-7"	10
Nuts, lock nuts and washers as shown	

NOTES

1. Remove sheared bolts in fixed truss shoe.
2. Jack fixed side truss shoe until bolt holes align with grillage holes.
3. Replace missing bolts with new 1" ø x 8" long A325 bolts. Furnish one nut and two washers per bolt with nut installed on lower end of bolt (head up).

CONTRACT No. 04-190054
DATE ACCEPTED 3/20/90
AS BUILT
RESIDENT ENGINEER
REVIS ONS BY
DATE 6/28/90

DESIGN	BY R.R. Bridwell	CHECKED R.W. White	
DETAILS	BY R.R. Bridwell	CHECKED R.W. White	
QUANTITIES	BY	CHECKED	

STATE OF CALIFORNIA
DEPARTMENT OF TRANSPORTATION

DIVISION OF STRUCTURES
STRUCTURE MAINTENANCE

BRIDGE NO. 33-25
POST MILE 0.7/1.1

SAN FRANCISCO - OAKLAND BAY BRIDGE - EARTHQUAKE REPAIRS

REPAIRS FOR PIERS E18 THROUGH E22

ORIGINAL SCALE IN INCHES FOR REDUCED PLANS 0 1 2 3

CU 59 523
EA 04-190054

DISREGARD PRINTS BEARING EARLIER REVISION DATES

REVISION DATES (PRELIMINARY STAGE ONLY)

SHEET 2 OF 3

DS OSM 2139-M (5/89)

AS BUILT PLANS
Contract No. 04-190054

DIST.	COUNTY	ROUTE	POST MILES TOTAL PROJECT	SHEET NO.	TOTAL SHEETS
04	ALA	80	0.7/1.1	3	3

Richard W. White
REGISTERED ENGINEER - CIVIL

REGISTERED PROFESSIONAL ENGINEER Richard W. White No. C16762 Exp. 6/30/23 CIVIL STATE OF CALIFORNIA

PLANS APPROVAL DATE

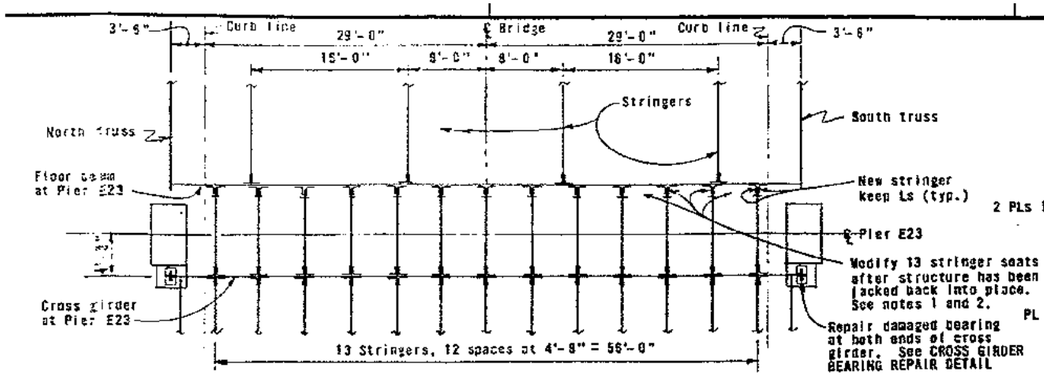

UPPER DECK FRAMING PLAN AT PIER E23
1/8" = 1'-0"

Note: Concrete deck not shown

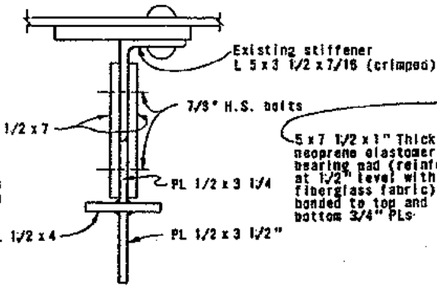

SECTION A-A
3" = 1'-0"

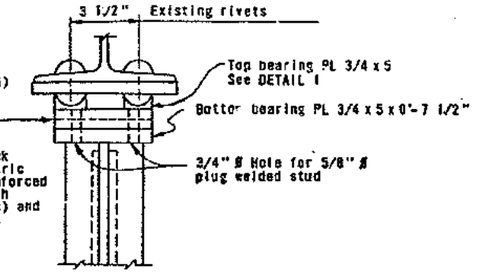

SECTION B-B
3" = 1'-0"

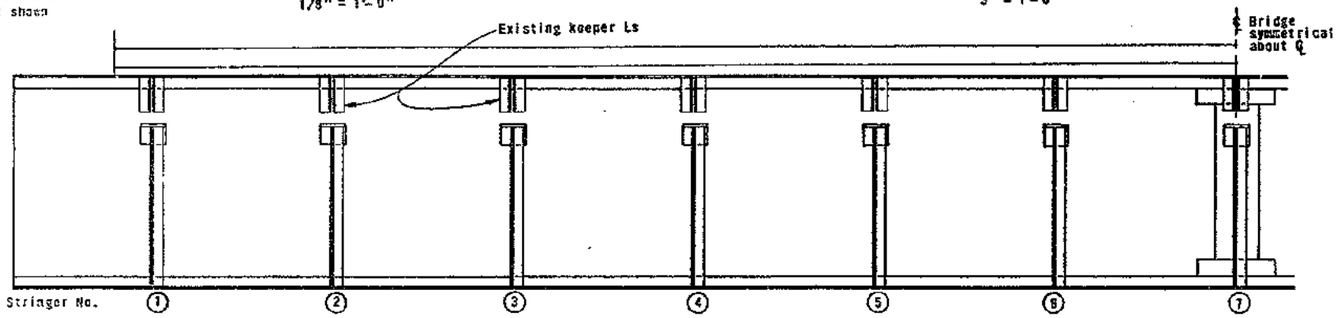

FLOOR BEAM ELEVATION
(At Pier 23 looking east showing existing stringer seats only)
1/2" = 1'-0"

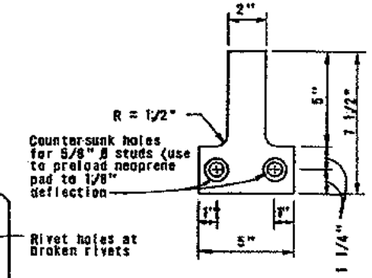

DETAIL 1
(Plan of top bearing plate)
3" = 1'-0"

TABLE

STRINGER NO.	DIMENSION
1 (R & L)	4'-4 3/8"
2 (R & L)	4'-5 15/16"
3 (R & L)	4'-5 7/16"
4 (R & L)	4'-5 13/16"
5 (R & L)	4'-6 1/16"
6 (R & L)	4'-6 3/16"
7 (℄ only)	4'-6 3/8"

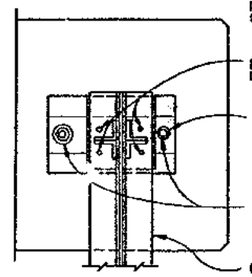

PLAN
(Shown in damaged condition)

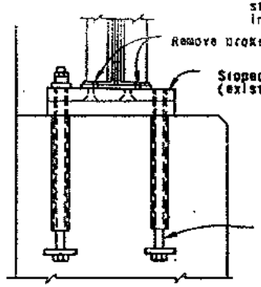

ELEVATION

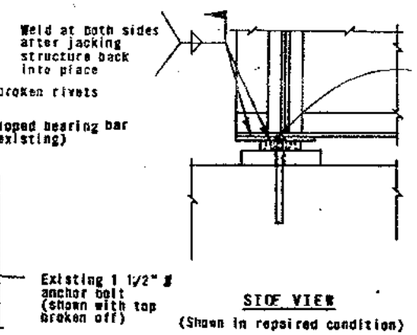

SIDE VIEW
(Shown in repaired condition)

CROSS GIRDER BEARING REPAIR DETAIL
(Detail at north and south ends of cross girder at Pier E23)
3/4" = 1'-0"

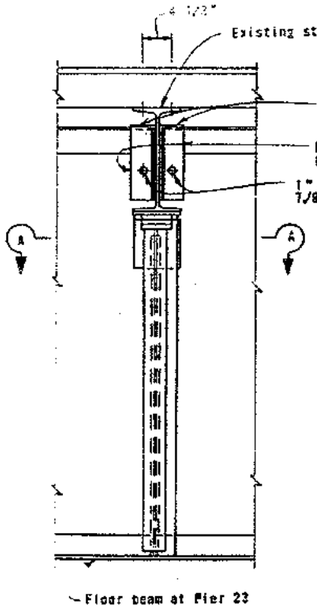

ELEVATION
(Typical stringer seat modification)
1" = 1'-0"

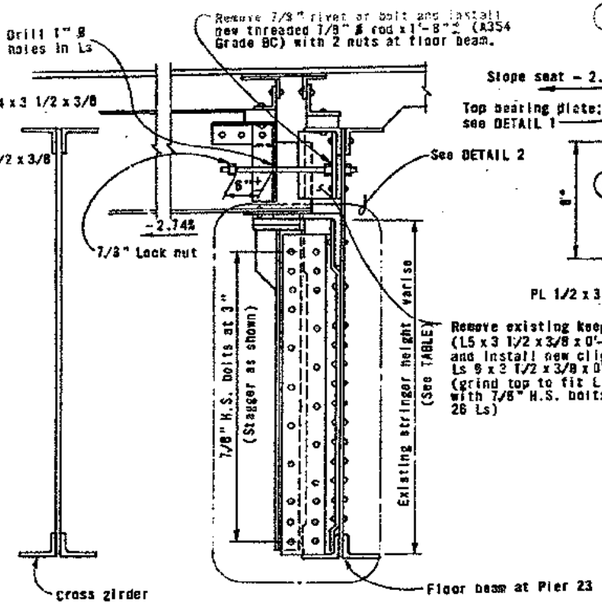

SIDE VIEW
(Typical stringer seat modification)
1" = 1'-0"

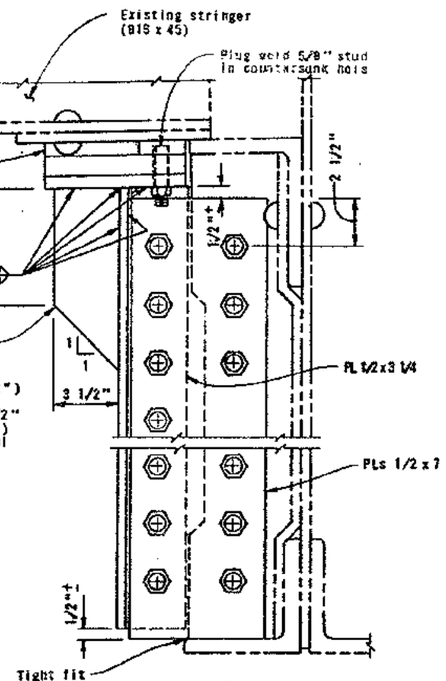

DETAIL 2
3" = 1'-0"

NOTES

1. The repair of Pier E23 consists of jacking the displaced cross girder (along with attached structure) back to the original bearing location, repairing bearings and modifying 13 stringer seats.
2. Before jacking the structure back into place, remove the near side (nearer to stringer) keeper angles from the web of the floor beam; after jacking is completed, temporarily reinstall these keeper angles to the floor beam web with H.S. bolts; and then modify the stringer seats as shown. Each stringer seat shall be completely modified before the next seat is started to be modified.
3. Remove double nuts and washers from unbroken anchor bolts. Clean out recess in bearing plate around bolts and fill with 2 part polyurethane sealant. Reinstall washers and double nuts on unbroken anchor bolts leaving 1/8" clearance from tight condition. At broken anchor bolts clean out and seal recess as noted above ~~and cap as shown in SIDE VIEW~~.

CONTRACT No. 04-190054
DATE ACCEPTED 2/20/20
AS BUILT
RESIDENT ENGINEER Jim Valle
REVISIONS BY DATE 6/30/20

AS BUILT PLANS
Contract No. 04-190054
Date Completed 2-20-20

DESIGN	BY R.E. Keim	CHECKED R.R. Bridwell	
DETAILS	BY R.E. Keim	CHECKED R.W. White	
QUANTITIES	BY	CHECKED	

ORIGINAL SCALE IN INCHES FOR REDUCED PLANS 0 1 2 3

STATE OF CALIFORNIA
DEPARTMENT OF TRANSPORTATION

DIVISION OF STRUCTURES
STRUCTURE MAINTENANCE

CU 59 623
EA 04-190054

BRIDGE NO. 33-25
POST MILE 0.7/1.1

SAN FRANCISCO - OAKLAND BAY BRIDGE - EARTHQUAKE REPAIRS
PIER E23 - STRINGER SEAT MODIFICATIONS

DISREGARD PRINTS BEARING EARLIER REVISION DATES
REVISION DATES (PRELIMINARY STAGE ONLY)

SHEET 3 OF 3

SM 2132-M (5-93)

STATE OF CALIFORNIA

DEPARTMENT OF PUBLIC WORKS

DIVISION OF HIGHWAYS

PLAN AND PROFILE OF

STATE HIGHWAY

On The San Francisco - Oakland Bay Bridge At Yerba Buena Island

(being the detail plans of a portion of the route for the State highway adopted by the California Highway Commission)

DATE APPROVED: May 17, 1954

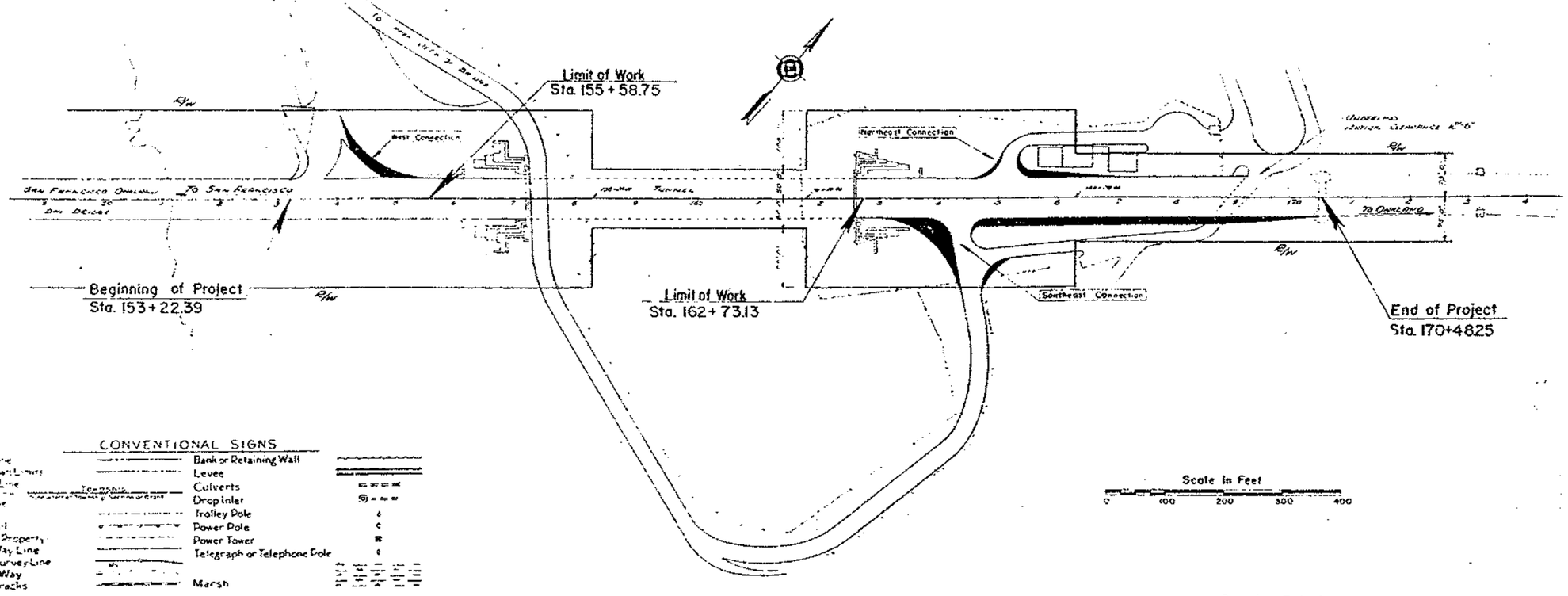

CONVENTIONAL SIGNS

County Line
City or Town Limits
Township Line
Section Line
Grant Line
Fence
Guard Rail
Unfenced Property
Right of Way Line
Base or Survey Line
Traveled Way
Railway Tracks
Bank or Retaining Wall
Levee
Culverts
Drop Inlet
Trolley Pole
Power Pole
Power Tower
Telegraph or Telephone Pole
Marsh

Contr. 54-BBC1