Deck Drainage Improvements - Yerba Buena Island (Contract No. 04-026404)

The as-built drawings, which are contained in these CDs, are scanned from drawings of the existing structure for the convenience of the contractor and as a means to convey to the contractor the available information regarding the existing structure. It is to be understood that no claim is being made as to the accuracy or completeness of the said information and that the State of California or its officers or agents shall not be responsible for the manner in which the contractor interprets and uses this information or for the accuracy, currency or completeness of these scanned as-built drawings. The contractor shall be responsible to obtain, at the contractor's expense, any additional information that the contractor deems necessary for completely and accurately assessing the existing conditions of the structure. The contractor shall not be entitled to any compensation for any claim arising from inaccuracy or insufficiency of these as-built drawings or in anyway related to these drawings.

1. Project Plan
2. Upper Deck Drains Sta. 162+30 to 167+00
3. Upper Deck Drains Sta. 167+00 to 170+00
4. Construction Details - I
5. Construction Details - II
6. Construction Details – III
7. Construction Details – IV
8. Lower Deck Drains Piers Y.B.I. To E1
9. Lower Deck South Curb Seal

STATE OF CALIFORNIA
BUSINESS AND TRANSPORTATION AGENCY
DEPARTMENT OF TRANSPORTATION

PROJECT PLANS FOR CONSTRUCTION ON STATE HIGHWAY

IN THE CITY AND COUNTY OF SAN FRANCISCO
ON THE SAN FRANCISCO – OAKLAND BAY BRIDGE
AT YERBA BUENA ISLAND

TO BE SUPPLEMENTED by STANDARD PLANS dated March, 1977

AS BUILT PLANS
Contract No. 04-026404
Date Completed
Document No.

Chief, Office of Office Engineer
Registered Civil Engineer No. 8167
January 30, 1978
APPROVED:

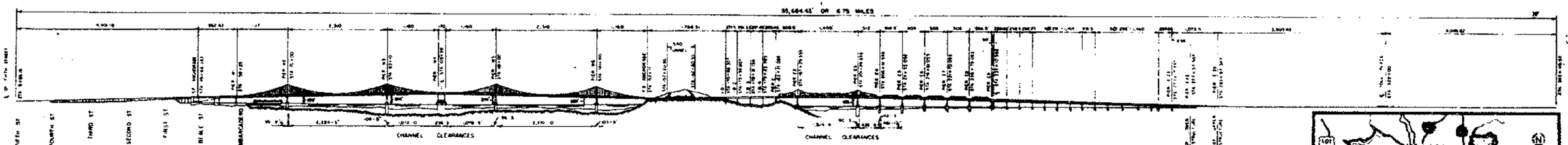

ELEVATION

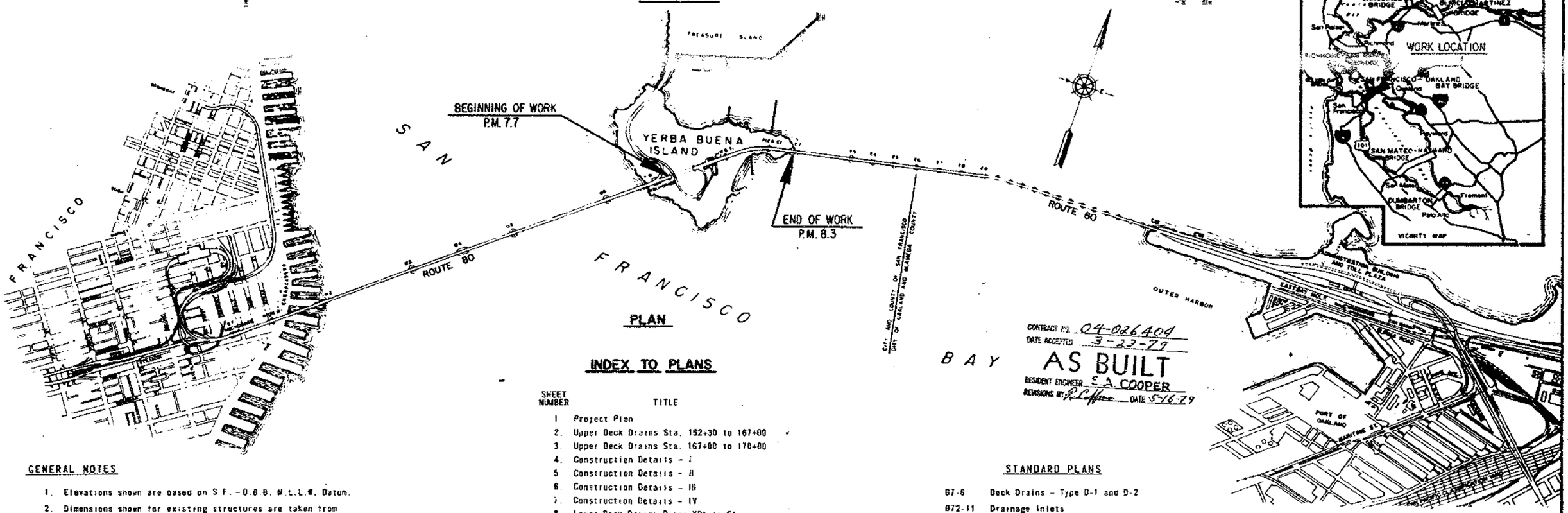

PLAN

CONTRACT NO. 04-026404
DATE ACCEPTED 3-23-79
AS BUILT
RESIDENT ENGINEER E. A. COOPER
REVISIONS BY [signature] DATE 5-16-79

INDEX TO PLANS

SHEET NUMBER	TITLE
1	Project Plan
2.	Upper Deck Drains Sta. 152+30 to 167+00
3.	Upper Deck Drains Sta. 167+00 to 170+00
4.	Construction Details – I
5	Construction Details – II
6.	Construction Details – III
7.	Construction Details – IV
8.	Lower Deck Drains Piers YB1 to E1
9.	Lower Deck South Curb Seal

GENERAL NOTES

1. Elevations shown are based on S.F.-O.B.B. M.L.L.W. Datum.
2. Dimensions shown for existing structures are taken from construction drawings. The Contractor shall field verify and adjust all dimensions to fit existing conditions since minor variations are to be anticipated.
3. PLAN, ELEVATION, SECTIONS, DETAILS or VIEWS show existing conditions except as noted by the word "New".
4. Only those topographies that have a direct relationship with the performance of this project are shown.

STANDARD PLANS

B7-6	Deck Drains – Type D-1 and D-2
B72-11	Drainage Inlets

MARK	DATE	REVISION	BY	CH'K.
1	8-83	As built without revision	cfc	

CONTRACT No. 04-026404

STATE OF CALIFORNIA — BUSINESS AND TRANSPORTATION AGENCY — DEPARTMENT OF TRANSPORTATION

DESIGN BY [signature]
SPECIFICATIONS BY [signature]
ESTIMATED BY [signature]
APPROVAL RECOMMENDED
Charles Sein
CHIEF - ENGINEERING BRANCH — REGISTERED ENGINEER C7636

APPROVED December 9, 1977
Vernon J. Richey
DEPUTY DISTRICT DIRECTOR — REGISTERED ENGINEER C7167

SAN FRANCISCO OAKLAND BAY BRIDGE
DECK DRAINAGE IMPROVEMENTS - YERBA BUENA ISLAND
PROJECT PLAN

SCALE 1" = 1160' | SHEET NO. 1 | DRAWING NO. 04-026404 R

04850-026401

AS BUILT PLANS
Contract No. 04-026404
Date Completed
Document No.

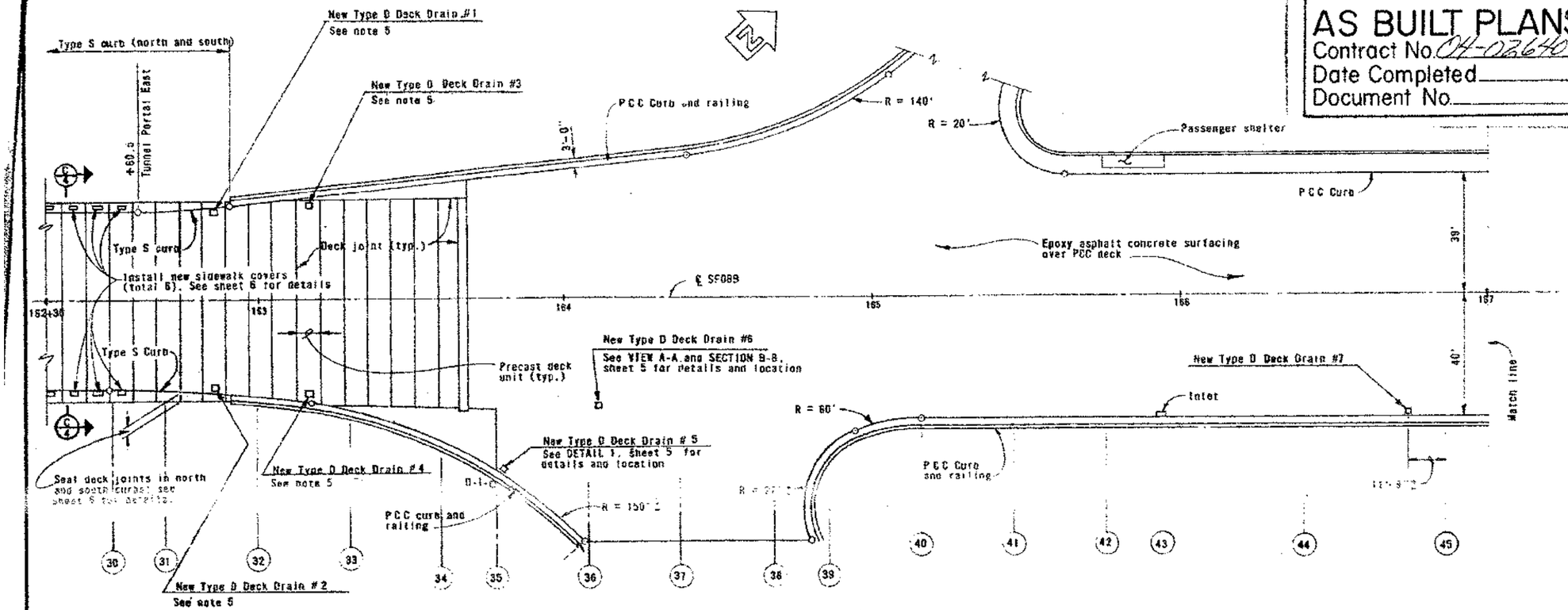

PLAN - UPPER DECK

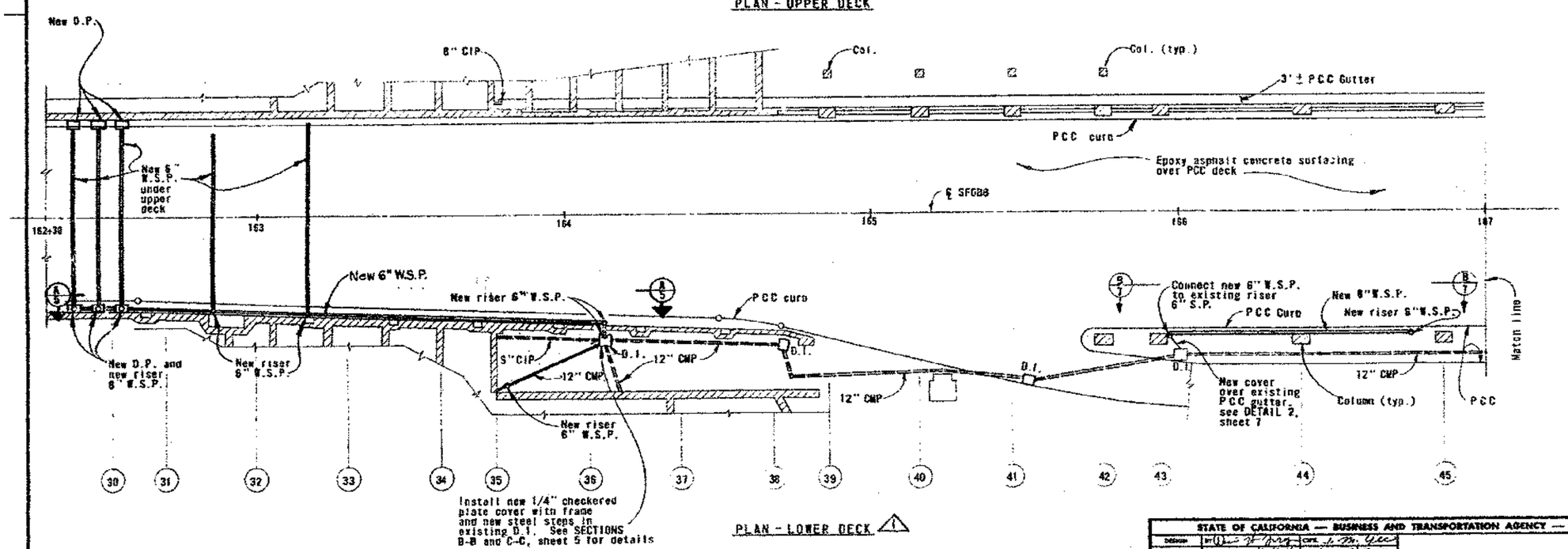

PLAN - LOWER DECK 1

LEGEND AND ABBREVIATIONS

	Existing concrete
	Epoxy Asphalt Concrete Surfacing
	New Epoxy Concrete unless noted
A.C.	Asphalt Concrete
C.I.P.	Cast Iron Pipe
D.D.	Deck Drain
D.I.	Drainage Inlet
E.J.	Expansion Joint
PCC	Portland Cement Concrete
C.M.P.	Corrugated Metal Pipe
C.O.	Cleanout
D.P.	Drop Pan
F.L.	Flow Line
W.S.P.	Welded Steel Pipe
S.P.	Steel Pipe
45	Bent Numbers

NOTES

1. For details of Type D Deck Drain, see sheet 7.
2. For PIPE HANGER DETAIL, see sheet 7.
3. For details of drop pans, see sheet 6.
4. Hangers, straps and clamps shall be galvanized after fabrication and installed within 18 inches of all pipe fittings, and on 10'-0" maximum intervals.
5. Deck drains Nos. 1, 2, 3 and 4 shall be installed on ℄ of precast deck unit indicated.
6. Strap supports shall be 2 1/2" x 3/8" ⌒ strap with 5/8" Ø bolts and concrete anchors.

Contract No. 04-026404
Date Accepted 3-23-79
As Built with - revision
Resident Engineer S. COOPER
Revision By R. COFFMAN Date 5-16-79

8 THS 0 1 2 3 4 10 THS
SCALE IN INCHES ON ORIGINAL

MARK	DATE	REVISION	BY	CHK.
1	8-83	As built with - revision.	cfc	

STATE OF CALIFORNIA — BUSINESS AND TRANSPORTATION AGENCY — DEPARTMENT OF TRANSPORTATION

DESIGN BY [signature] CHK. [signature]
DRAWN BY [signature] CHK. [signature]
SPECIFICATION [signature] ESTIMATE [signature]
IN CHARGE OF DESIGN: [signature]
REGISTERED ENGINEER

APPROVED December 9, 1977
S. Larsen
DESIGN ENGINEER - REGISTERED ENGINEER

SAN FRANCISCO - OAKLAND BAY BRIDGE
DECK DRAINAGE IMPROVEMENTS - YERBA BUENA ISLAND
UPPER DECK DRAINS STA. 162+30 TO 167+00

SCALE	SHEET NO.	DRAWING NO.
1" = 20'-0"	2	04-026404-2 R

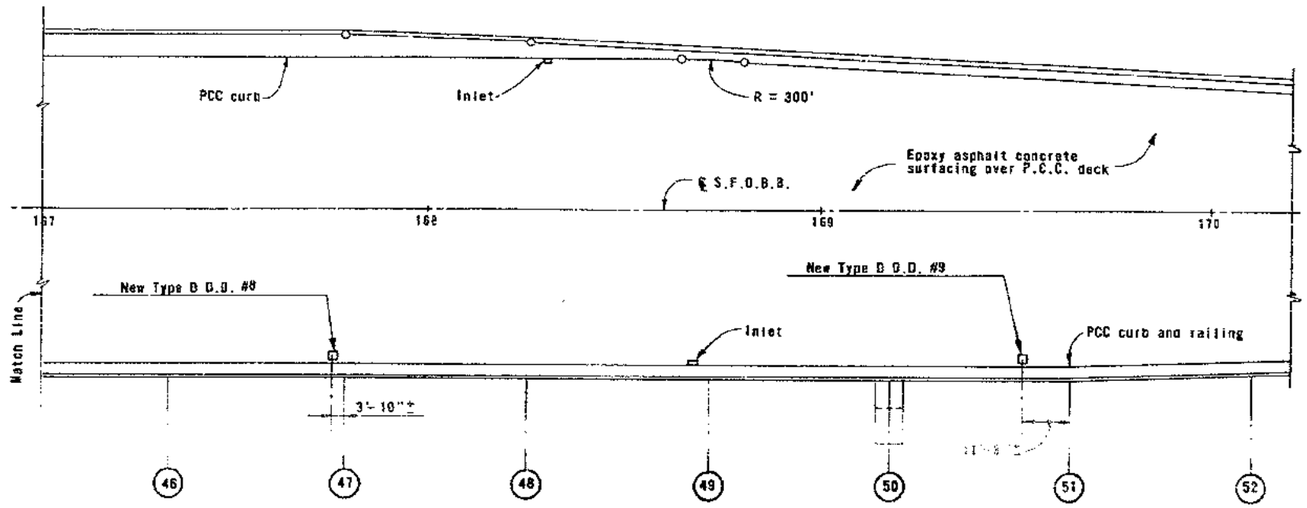

PLAN - UPPER DECK

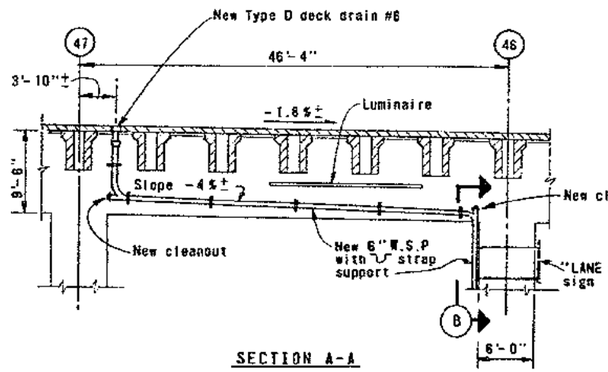

SECTION A-A

No Scale

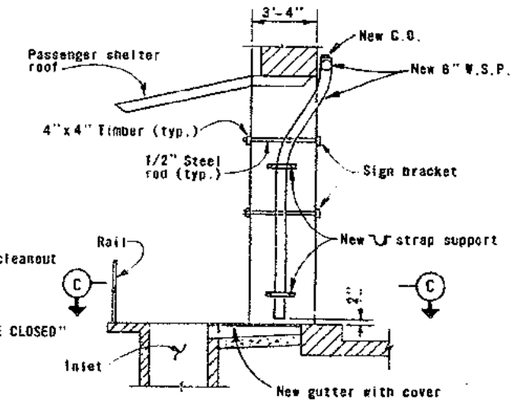

SECTION B-B

1" = 4'-0"

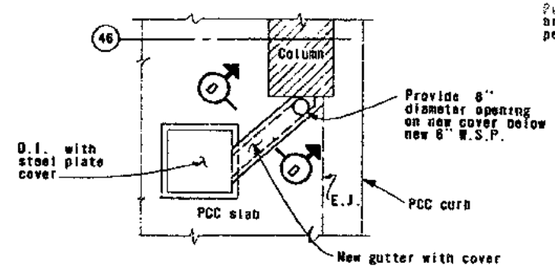

VIEW C-C

1" = 4'-0"

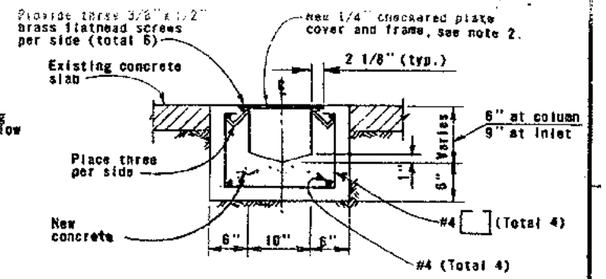

SECTION D-D

1" = 1'-0"

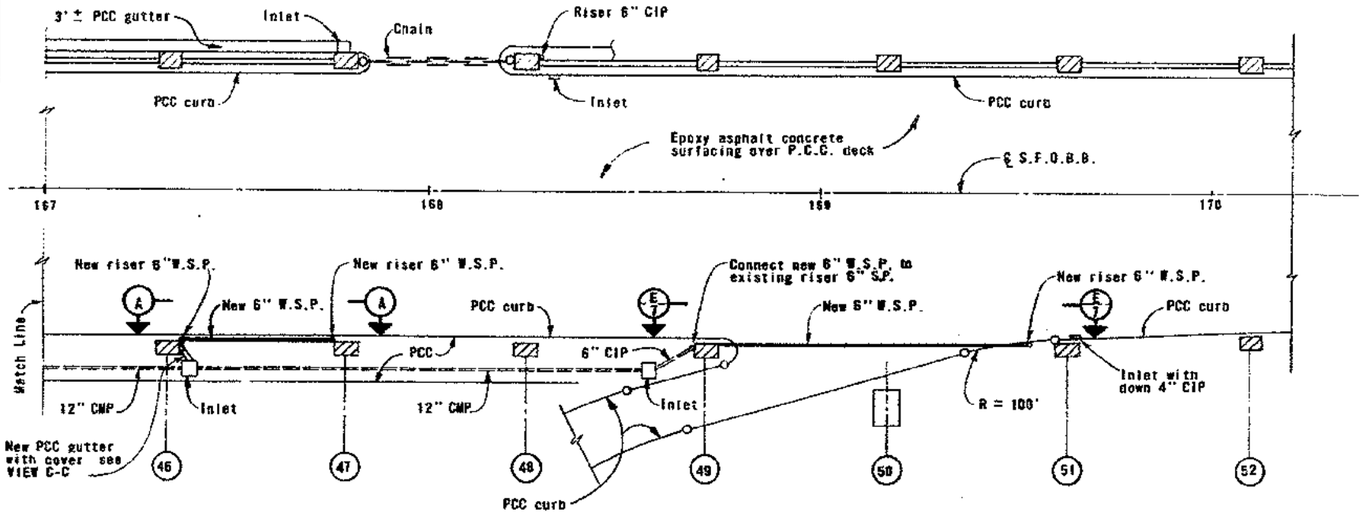

PLAN - LOWER DECK

AS BUILT PLANS
Contract No. 04-026404
Date Completed
Document No.

NOTES

1. See LEGEND and ABBREVIATIONS and NOTES shown on sheet 2.
2. For additional details of new cover, see STANDARD PLAN D72-11 DRAINAGE INLETS.

Contract No. 04-026404
Date Accepted 3-23-79
As Built without revision
Resident Engineer S. COOPER
Checked By B. COFFMAN Date 5-16-79

8 THS 10 THS
0 1 2 3 4
SCALE IN INCHES ON ORIGINAL

STATE OF CALIFORNIA — BUSINESS AND TRANSPORTATION AGENCY — DEPARTMENT OF TRANSPORTATION

DESIGN BY
DRAWN BY
SPECIFICATION
IN CHARGE OF DESIGN
APPROVED December 9, 1977

SAN FRANCISCO - OAKLAND BAY BRIDGE
DECK DRAINAGE IMPROVEMENTS - YERBA BUENA ISLAND
UPPER DECK DRAINS STA. 167+00 TO 170+00

SCALE Unless Noted 1" = 20'-0" | SHEET NO. 3 | DRAWING NO. 04-026404-3 R

MARK	DATE	REVISION	BY	CHK.
1	8-83	As built without revision.	cfc	

DIST	CO	ROUTE	POST MILE	SHT NO	TOTAL SHEETS
04	SF	80	7.7/8.3	4	9

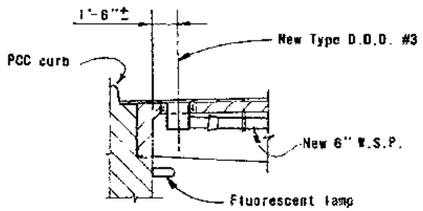

STA. 163+00 TO 163+30 NORTH SIDE

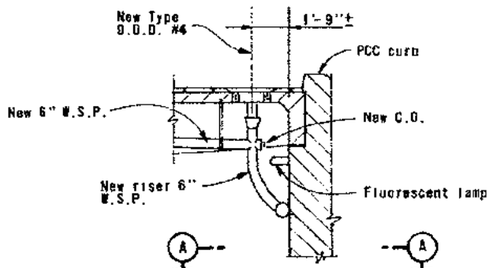

STA. 163+00 TO 163+30 SOUTH SIDE 1

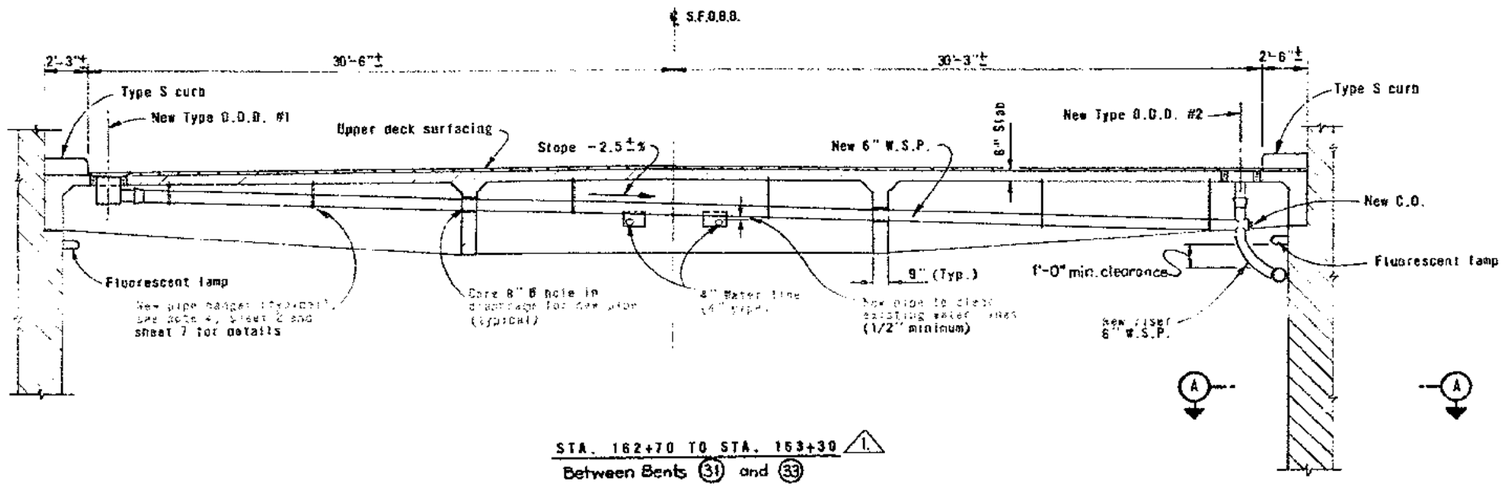

STA. 162+70 TO STA. 163+30 1

Between Bents 31 and 33

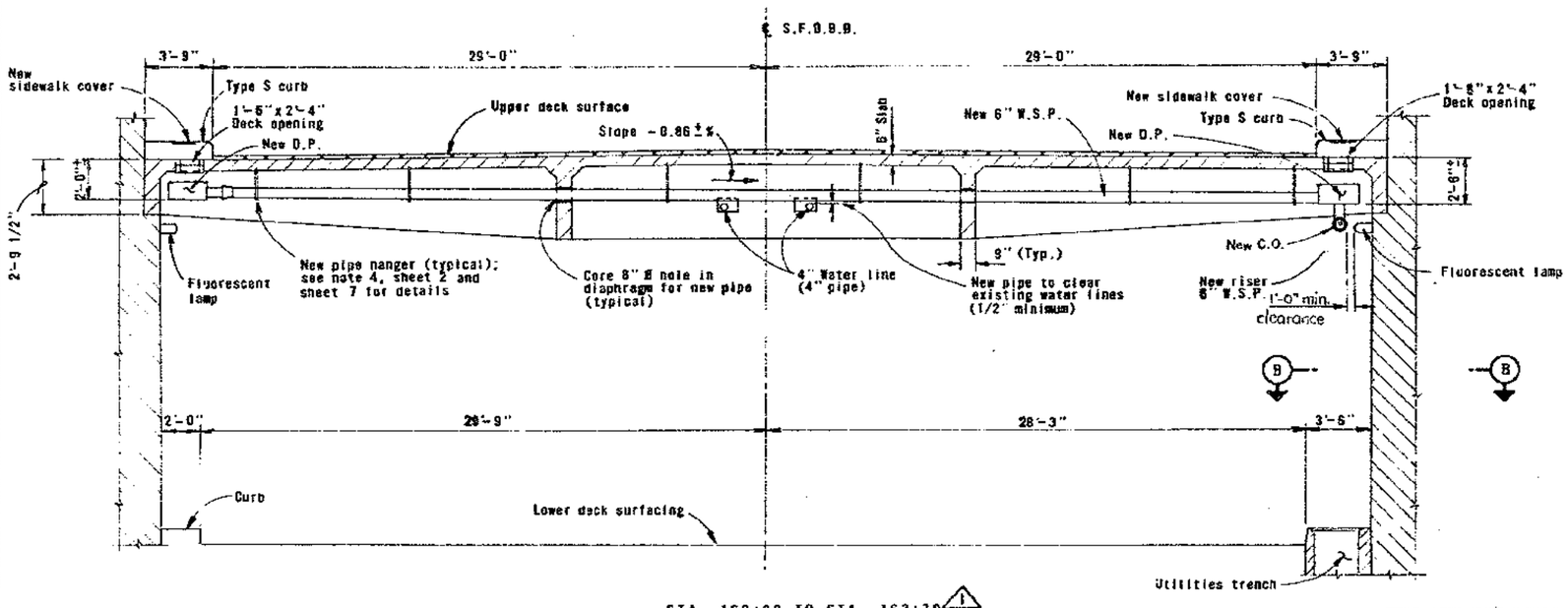

STA. 162+30 TO STA. 162+70 1

SECTION C-C

See sheet 2 for locations

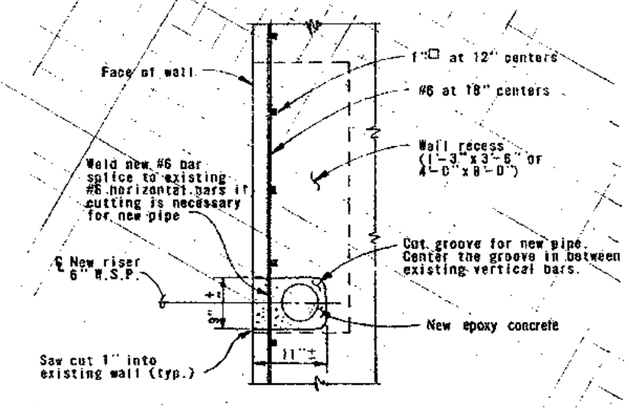

SECTION A-A 1

No Scale

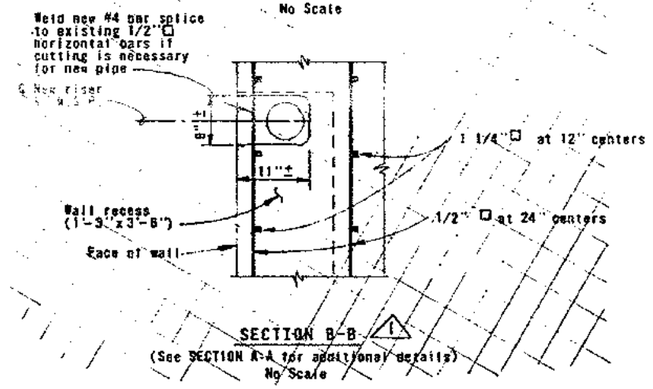

SECTION B-B 1

(See SECTION A-A for additional details)

No Scale

NOTES

1. See LEGEND and ABBREVIATIONS shown on sheet 2.
2. See VIEW A-A, sheet 5, for location of this portion of riser.

[redacted]

Contract No. 04-026404
Date Accepted 3-23-79
As Built with revision
Field in Engineer S. COOPER
Checked by R. COFFMAN Date 5-16-79

MARK	DATE	REVISION	BY	CHK.
1	8-83	As built with revision.	cfc	

STATE OF CALIFORNIA — BUSINESS AND TRANSPORTATION AGENCY — DEPARTMENT OF TRANSPORTATION

DESIGN BY [signature] CHK. [signature]
DRAWN BY [signature] CHK. [signature]
SPECIFICATION [signature] ESTIMATE [signature]
IN CHARGE OF DESIGN: [signature]
REGISTERED ENGINEER C14213

Caltrans APPROVED December 9, 1977
[signature]
DESIGN ENGINEER — REGISTERED ENGINEER C17722

SAN FRANCISCO - OAKLAND BAY BRIDGE
DECK DRAINAGE IMPROVEMENTS - YERBA BUENA ISLAND

CONSTRUCTION DETAILS - I

SCALE Unless Noted 1/4" = 1'-0" | SHEET NO. 4 | DRAWING NO. 04-026404-4R

DIST.	CO	ROUTE	POST MILE	SHEET NO.	TOTAL SHEETS
04	SF	80	7.1/6.3	S	2

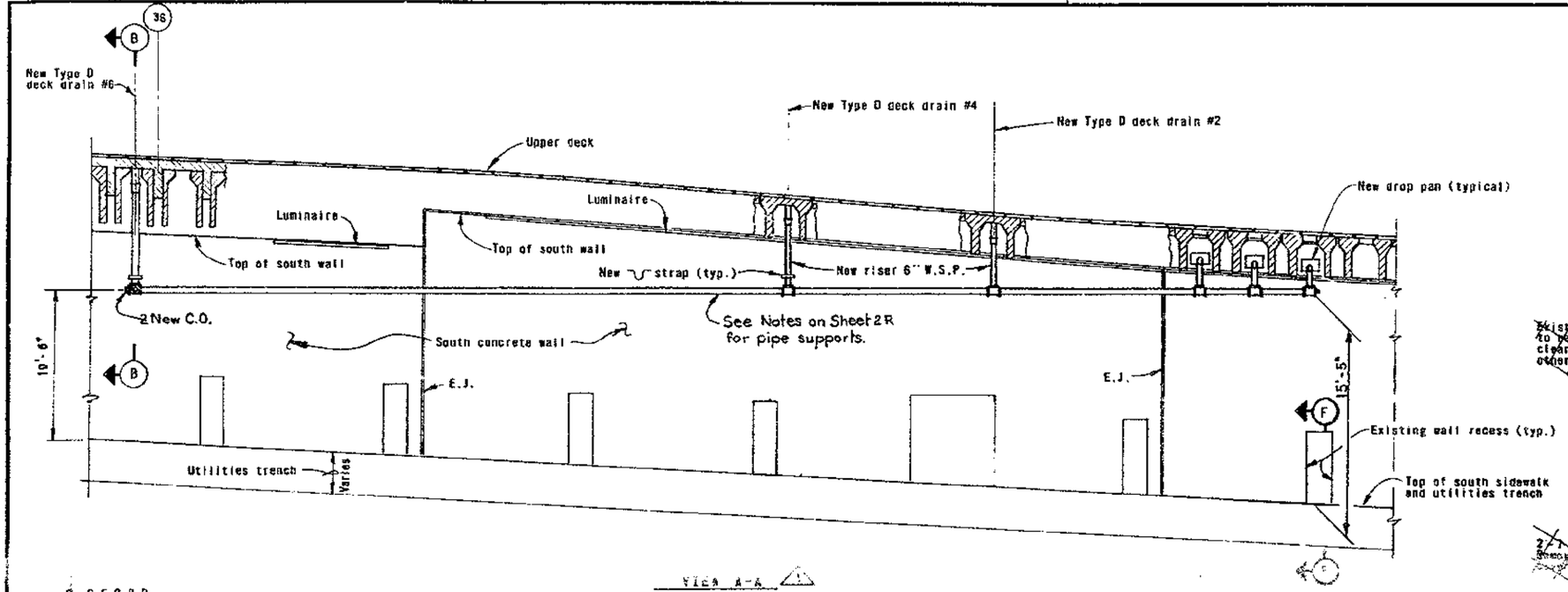

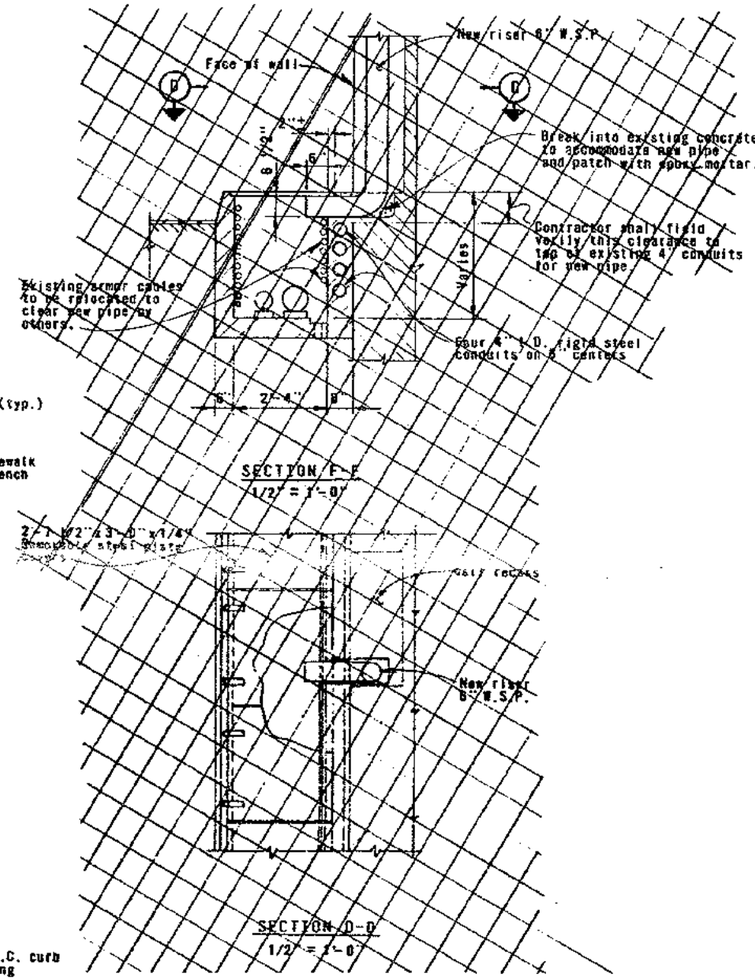

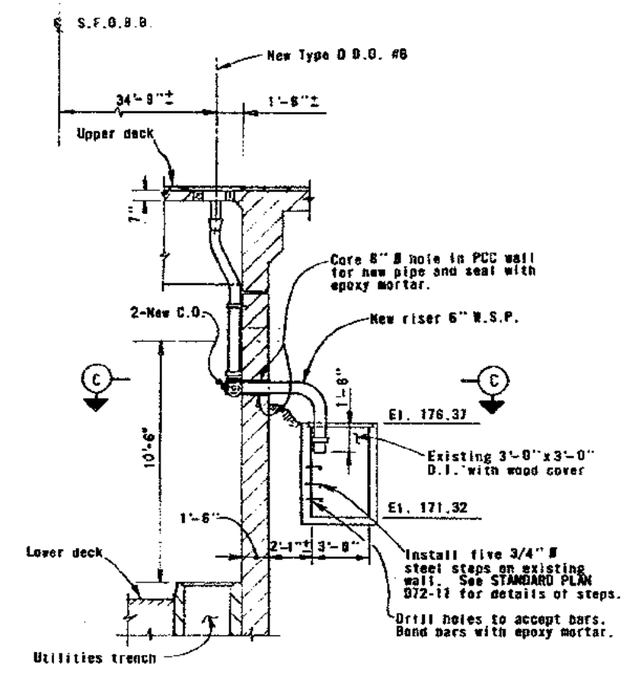

SECTION B-B ⚠1

VIEW A-A ⚠1
H. 1" = 10'-0"
V. 1" = 5'-0"
See sheet 2 for location

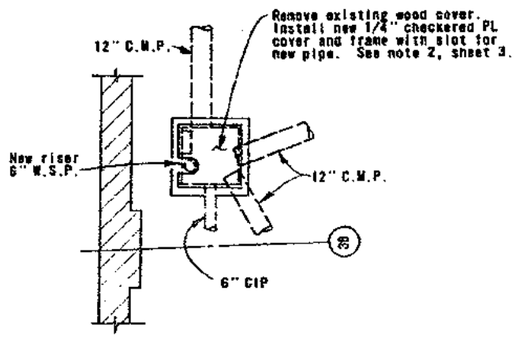

SECTION C-C

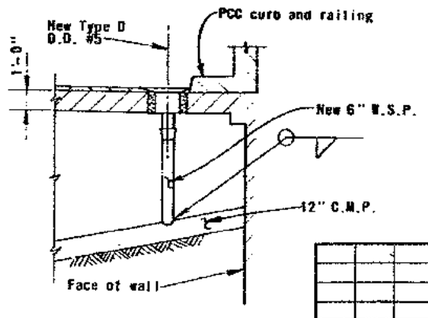

SECTION E-E

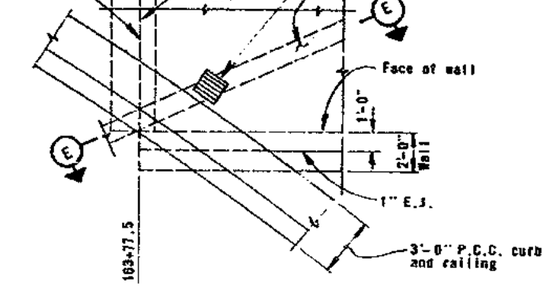

DETAIL 1 - PLAN
See sheet 2 for location

NOTES

1. See LEGEND and ABBREVIATIONS shown on sheet 2.

[redacted]

Contract No. 04-02604
Date Approved 3-23-79
As Built with revision
Resident Engineer S. Cooper
R. Coffman Date 5-18-79

MARK	DATE	REVISION	BY	CHK.
1	8-83	As built with revision	cfc	

STATE OF CALIFORNIA — BUSINESS AND TRANSPORTATION AGENCY — DEPARTMENT OF TRANSPORTATION

DESIGN OE Wm. H. Day CHK. Tom Gee
DRAWN Steve Wheeler CHK. Wm. H. Day
SPECIFICATION Lee Lindsey ESTIMATE Wm. H. Day
IN CHARGE OF DESIGN Wm. H. Day
REGISTERED ENGINEER — CIVIL

APPROVED December 9, 1977
S. Larsen
REGISTERED ENGINEER — CIVIL

SAN FRANCISCO - OAKLAND BAY BRIDGE
DECK DRAINAGE IMPROVEMENTS - YERBA BUENA ISLAND
CONSTRUCTION DETAILS - II

SCALE Unless Noted 1/4" = 1'-0" | SHEET NO. S | DRAWING NO. 04-026404-5 R

DIST	CO	ROUTE	POST MILES	SHEET NO	TOTAL SHEETS
04	SF	80	7.7/8.3	6	9

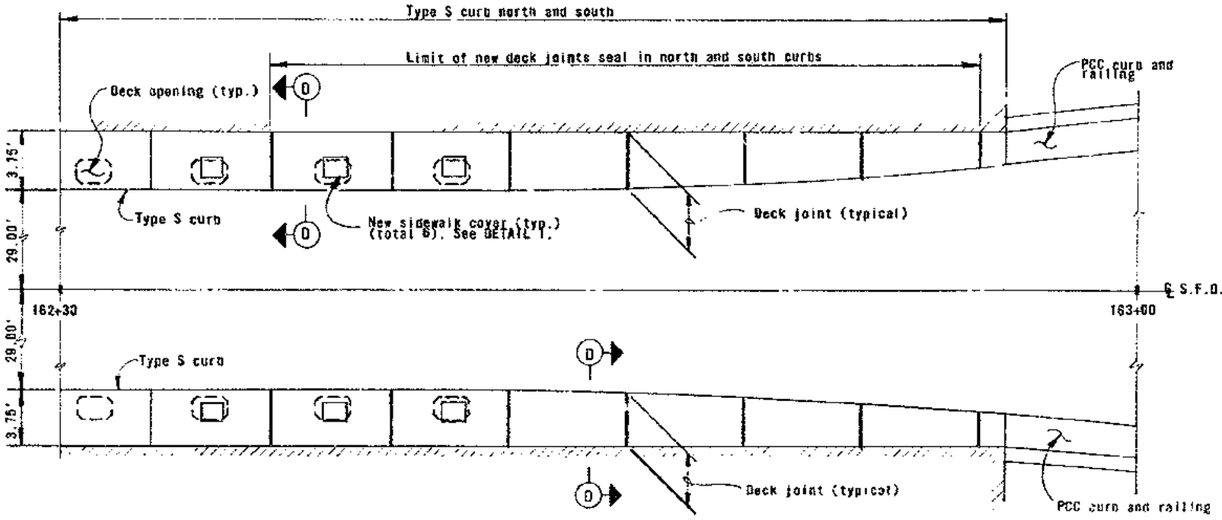

PLAN - UPPER DECK

NEW SIDEWALK COVERS AND DECK JOINT SEAL DETAILS

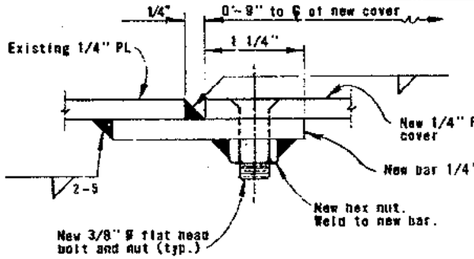

SECTION A-A

No Scale

See sheet 2 for location

1" = 5'-0"

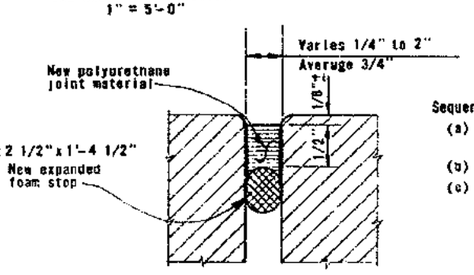

SECTION C-C

Full Scale

Sequence of sealing joints:

(a) Remove dirt and debris to provide clearance for new stop.

(b) Blast clean joint and place stop.

(c) Coat edges with primer and place polyurethane seal.

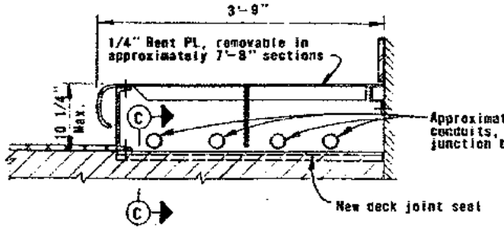

SECTION D-D

1" = 1'-0"

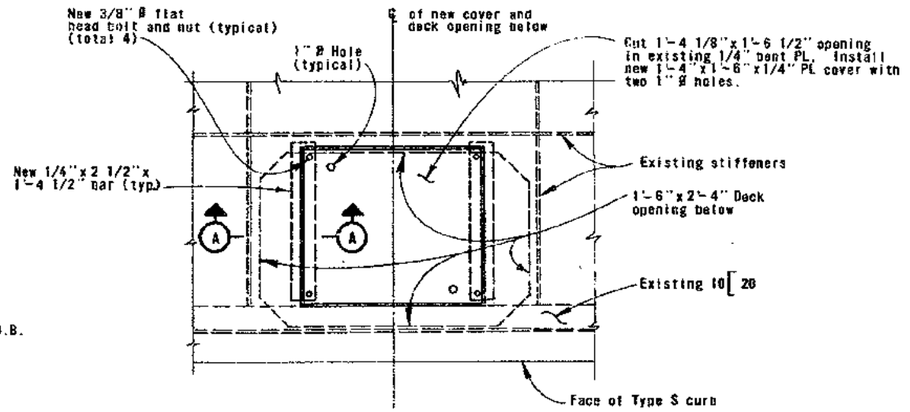

DETAIL 1

1 1/2" = 1'-0"

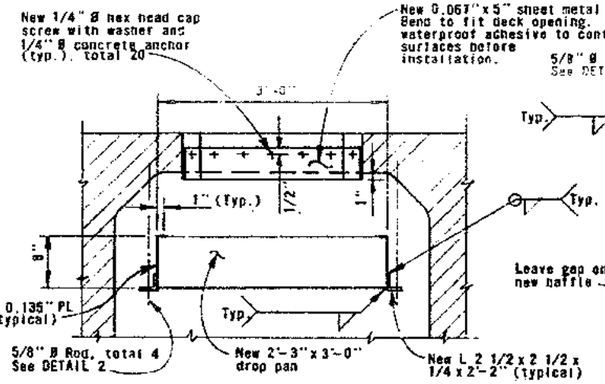

SECTION B-B

1" = 1'-0"

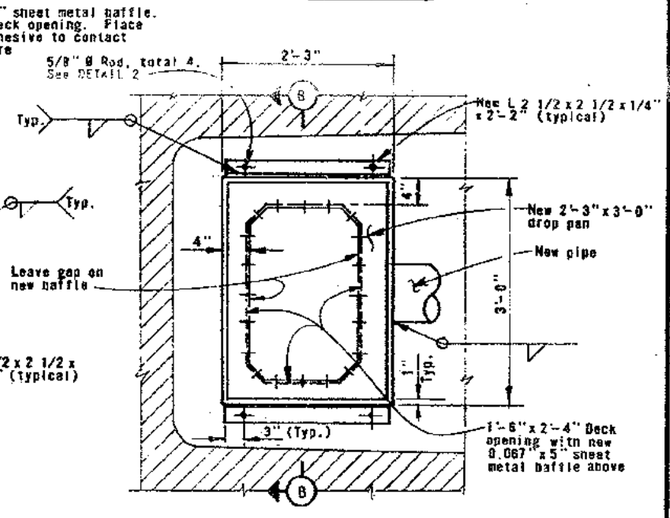

PLAN

DROP PAN DETAIL

(North side shown; South side opposite hand and similar)

1" = 1'-0"

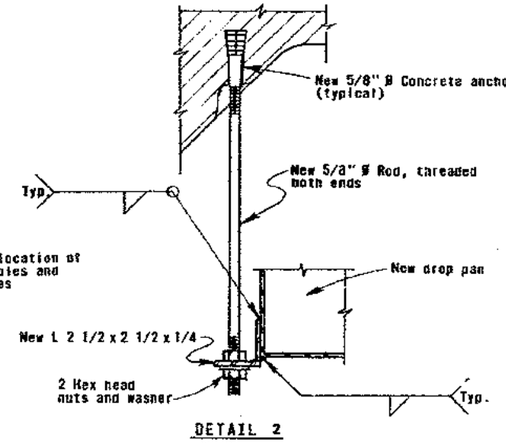

DETAIL 2

No Scale

NOTES

1. See LEGEND and ABBREVIATIONS shown on sheet 2.

Contract No. 04-026404

Date Accepted 3-23-79

As Built without revision

Resident Engineer S. COOPER

Checked R. COFFMAN Date 5-16-79

MARK	DATE	REVISION	BY	CHK.
1	8-83	As built without revision	cfc	

STATE OF CALIFORNIA — BUSINESS AND TRANSPORTATION AGENCY — DEPARTMENT OF TRANSPORTATION

DESIGN BY [illegible] CHK. [illegible]

DRAWN BY [illegible] CHK. [illegible]

SPECIFICATION [illegible] ESTIMATE [illegible]

IN CHARGE OF DESIGN [illegible]

REGISTERED ENGINEER C16233

APPROVED December 9, 1977

DESIGN ENGINEER - REGISTERED CIVIL C21232

SAN FRANCISCO - OAKLAND BAY BRIDGE

DECK DRAINAGE IMPROVEMENTS - YERBA BUENA ISLAND

CONSTRUCTION DETAILS - III

SCALE	SHEET NO.	DRAWING NO.
Unless Noted 1/4" = 1'-0"	6	04-026404-6 R

DIST	CO	ROUTE	POST MILE	SHT NO	TOTAL SHEETS
04	SF	80	7.5/8.3	7	8

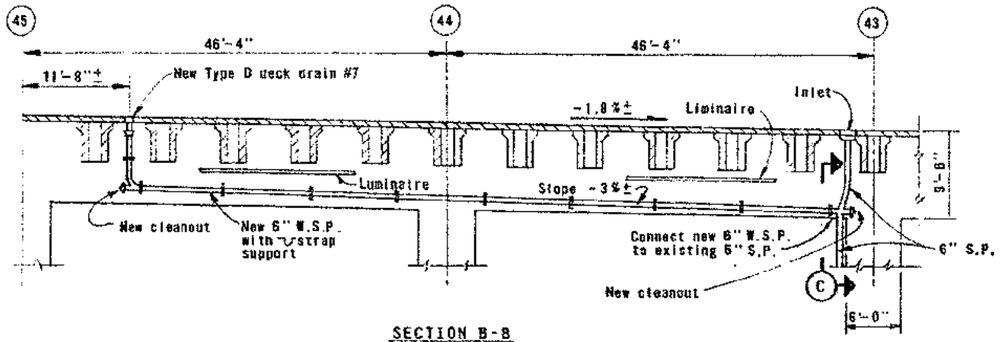

SECTION B-B
See sheet 2 for locations
No Scale

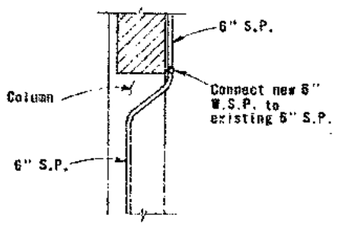

SECTION C-C
No Scale

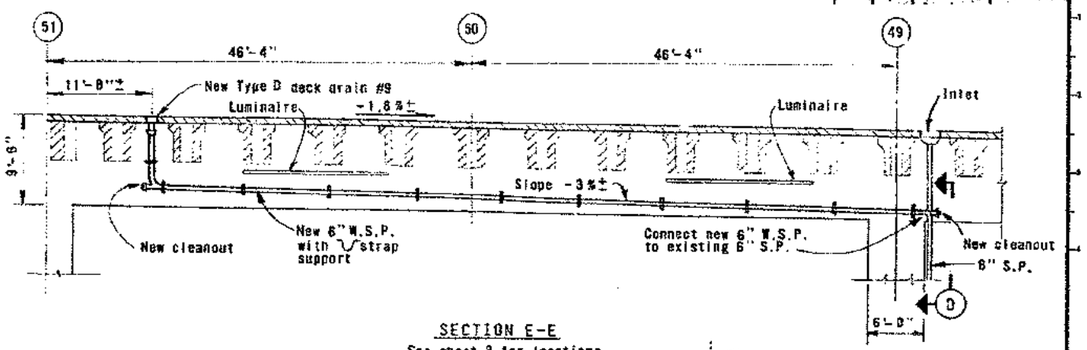

SECTION E-E
See sheet 3 for locations
No Scale

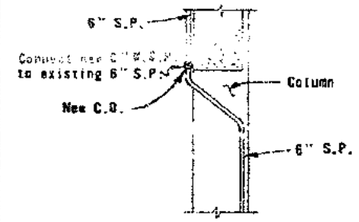

SECTION D-D
No Scale

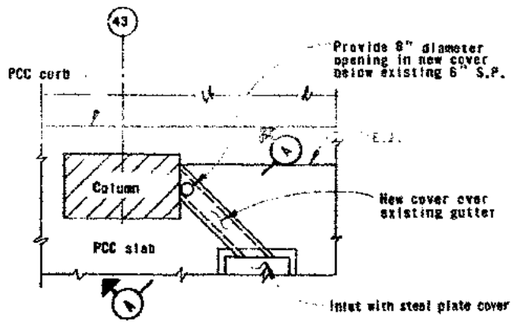

DETAIL z - PLAN
See sheet 2 for location
1" = 4'-0"

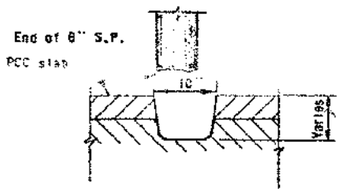

EXISTING GUTTER

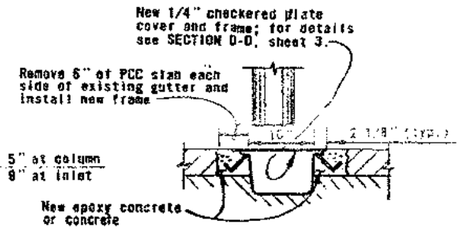

EXISTING GUTTER WITH NEW COVER

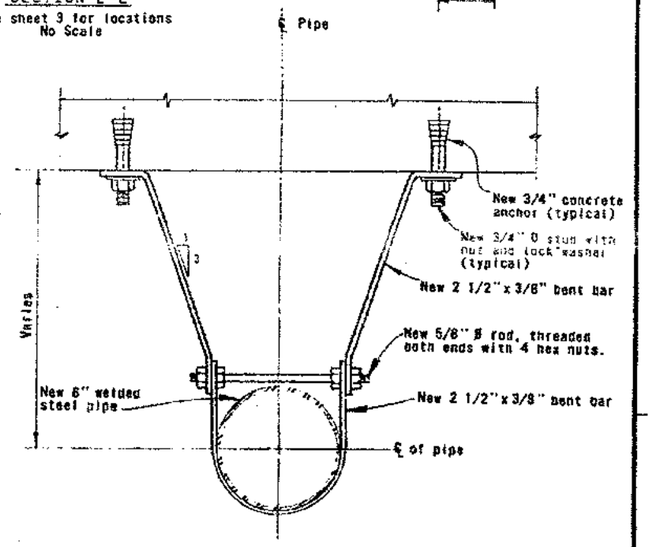

PIPE HANGER DETAIL
No Scale

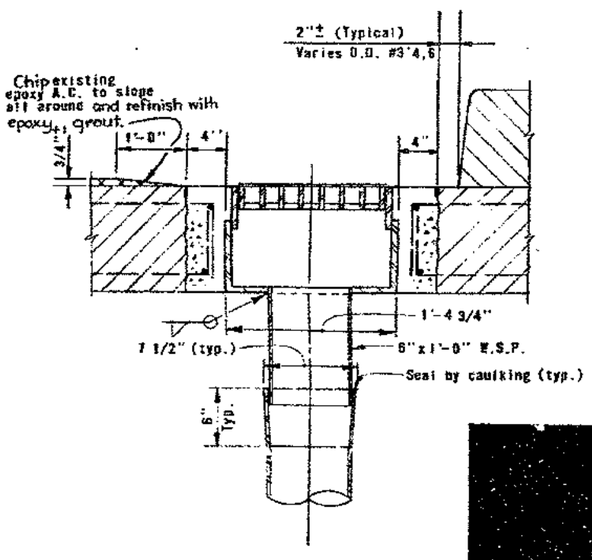

SECTION F-F ⚠1
No Scale

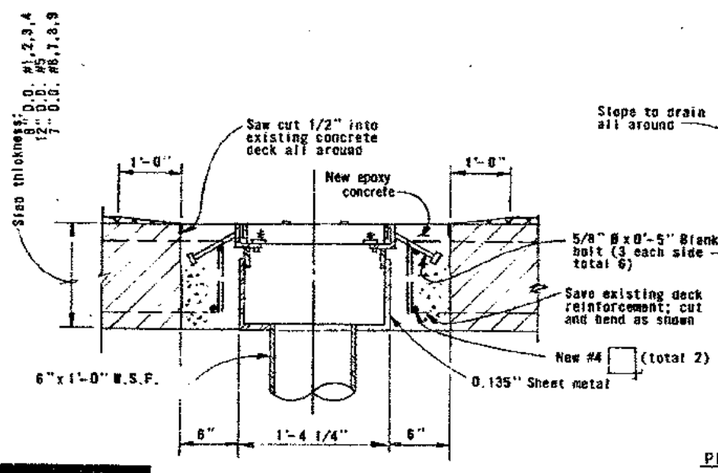

SECTION G-G
No Scale

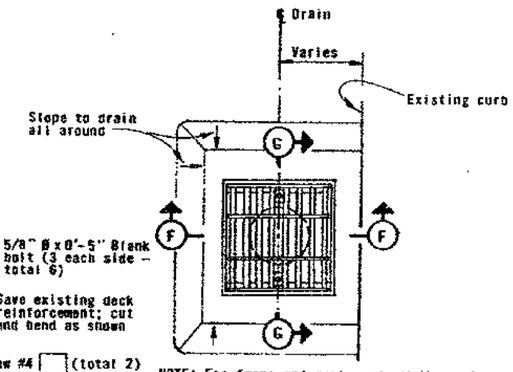

NOTE: For frame and grate and other details not shown see STANDARD PLAN B 7-6, DECK DRAINS - TYPES D-1 AND D-2

PLAN - NEW TYPE D DECK DRAIN
No Scale

NOTES

1. See LEGEND and ABBREVIATIONS shown on sheet 2.

Contract No. 04-026404
Date Accepted: 3-23-79
As Built: with revision
Resident Engineer: S. COOPER
Plotted by: R.COFFMAN on: 5-16-79

0 1/8 THS 1/2 3/8 THS 1 2 3 4
SCALE IN INCHES ON ORIGINAL

MARK	DATE	REVISION	BY	CHK.
⚠1	8-80	As built with revision	cfc	

STATE OF CALIFORNIA — BUSINESS AND TRANSPORTATION AGENCY — DEPARTMENT OF TRANSPORTATION

DESIGN BY [illegible] CHK. [illegible]
DRAWN [illegible] CHK. [illegible]
SPECIFICATION [illegible] ESTIMATE [illegible]
IN CHARGE OF DESIGN: [illegible]
REGISTERED ENGINEER - CIVIL

APPROVED December 9, 1977
[illegible]
DESIGN ENGINEER - REGISTERED ENGINEER - CIVIL

SAN FRANCISCO - OAKLAND BAY BRIDGE
DECK DRAINAGE IMPROVEMENTS - YERBA BUENA ISLAND
CONSTRUCTION DETAILS - IV

SCALE	SHEET NO.	DRAWING NO.
As Noted	7	04-026404-7 R

BASE	CO	ROUTE	POST MILE	SHT NO	TOTAL SHEETS
04	SF	80	7.7/8.3	8	9

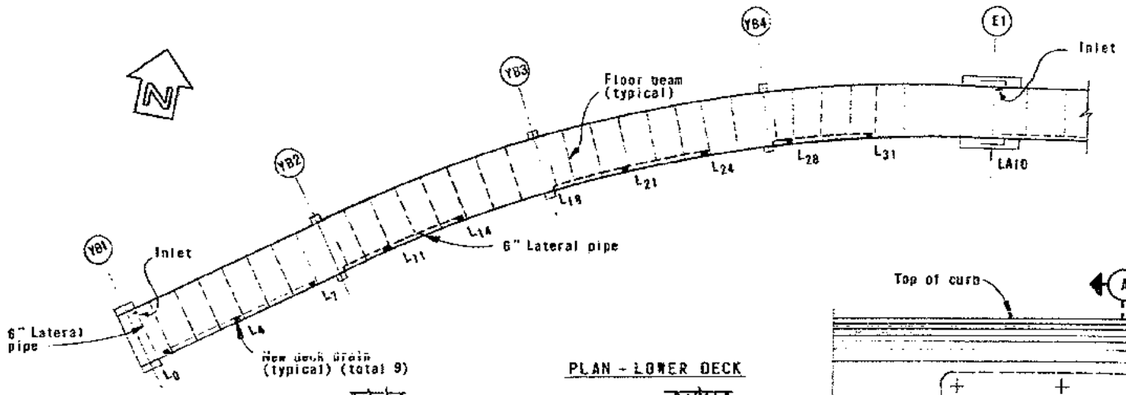

PLAN - LOWER DECK

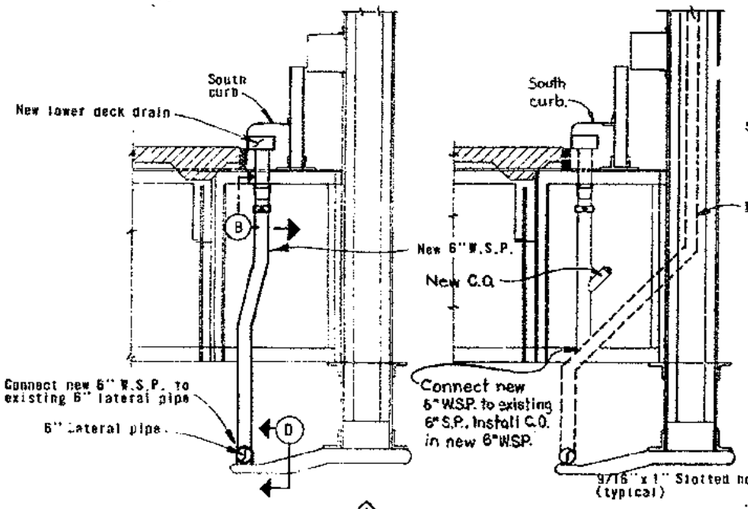

DRAIN DETAIL ⚠1

VIEW B-B
3" = 1'-0"
(Details shown for F.B. L1 only, see Section C-C for exceptions.)

SECTION C-C ⚠1
3" = 1'-0"

Clamp for new 6" W.S.P.

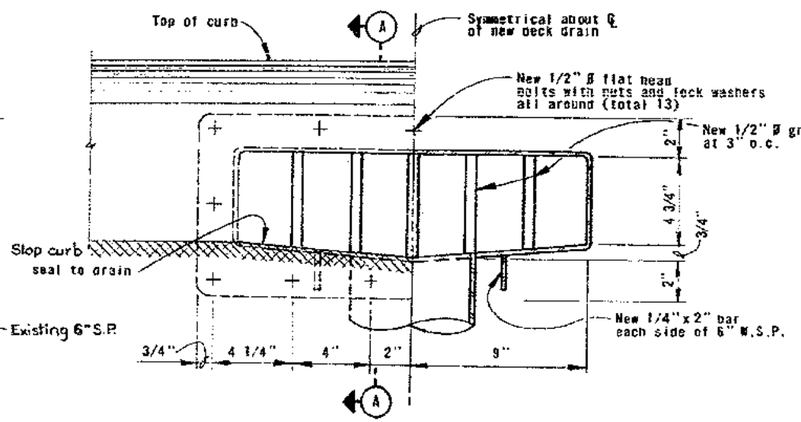

FRONT VIEW FRONT SECTION

NEW DECK DRAIN
3" = 1'-0"

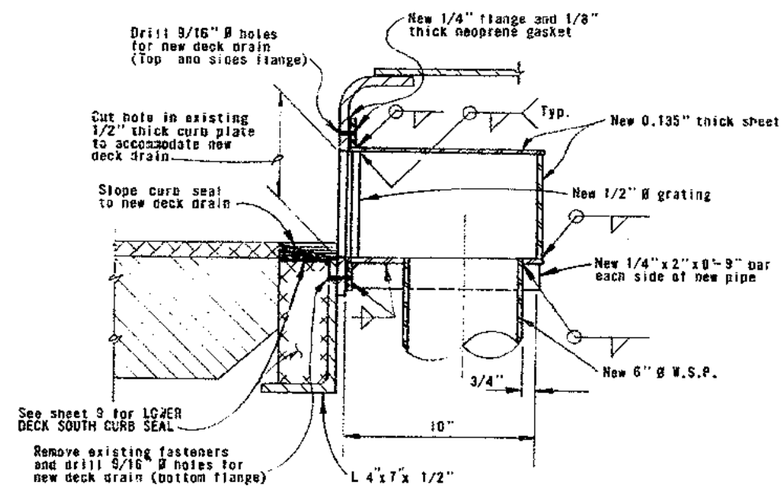

SECTION A-A
3" = 1'-0"

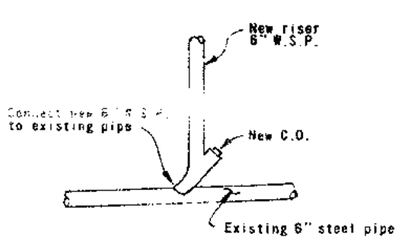

SECTION D-D
No Scale

NOTES

1. See LEGEND and ABBREVIATIONS shown on sheet 2.

AS BUILT PLANS
CONTRACT NO. 04-026404
DATE ACCEPTED 3-23-79
AS BUILT with revision
ENGINEER S. COOPER
S. COFFMAN 5-16-79

MARK	DATE	REVISION	BY	CHK.
⚠1	8-83	As built with revision.	c.f.c.	

STATE OF CALIFORNIA — BUSINESS AND TRANSPORTATION AGENCY — DEPARTMENT OF TRANSPORTATION

DESIGN W. Dorsey CHK. V. Gee
DRAWN RECOMMENDED W. Dorsey
SPECIFICATION W. Lindsay ESTIMATE W. Dorsey
IN CHARGE OF DESIGN W. Dorsey
REGISTERED ENGINEER 014213

Caltrans
APPROVED December 9, 1977
S. Larsen
DESIGN ENGINEER — REGISTERED ENGINEER 032232

SAN FRANCISCO - OAKLAND BAY BRIDGE
DECK DRAINAGE IMPROVEMENTS - YERBA BUENA ISLAND
LOWER DECK DRAINS PIERS Y.B.I. TO E1

SCALE	SHEET NO.	DRAWING NO.
Unless Noted 1" = 100'-0"	8	04-026404-8 R

AS BUILT PLANS
Contract No. 04-026404
Date Completed
Document No.

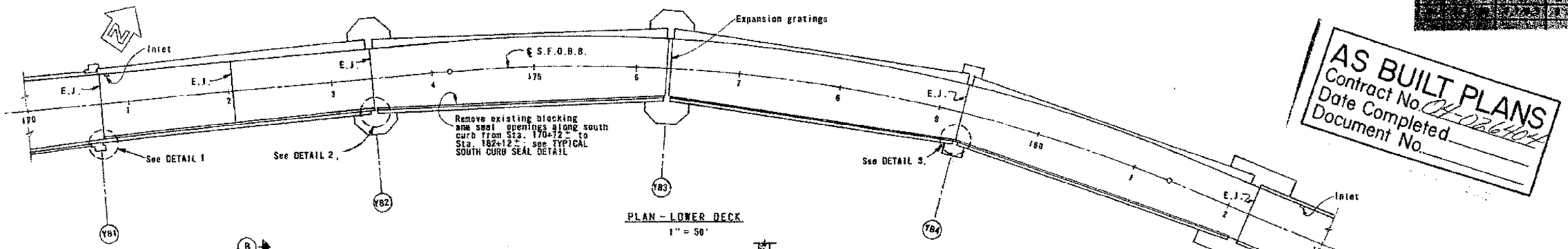

PLAN - LOWER DECK
1" = 50'

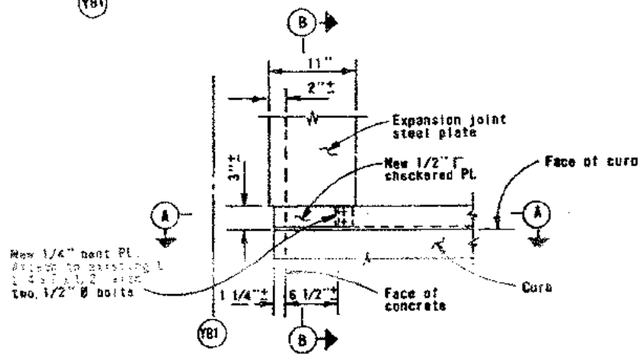

DETAIL 1 - PLAN
No Scale

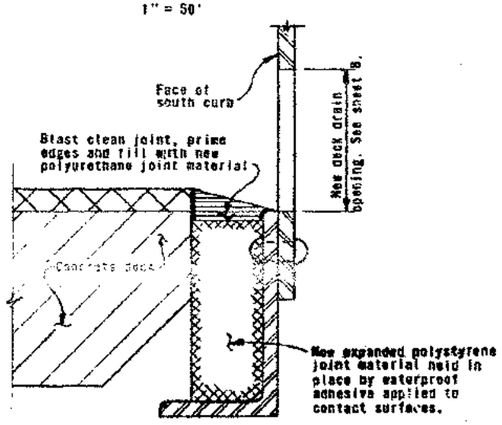

SOUTH CURB SEAL DETAIL AT DECK DRAIN
No Scale

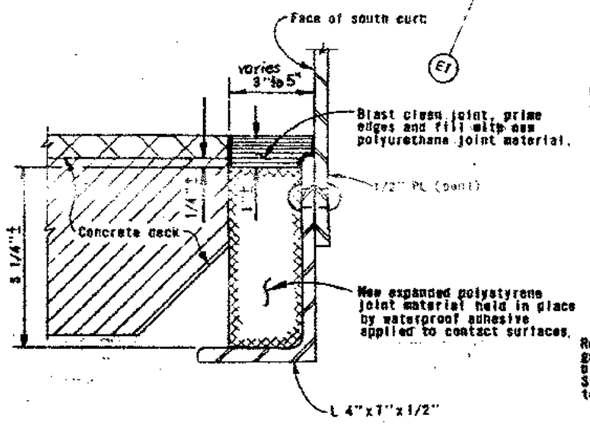

TYPICAL SOUTH CURB SEAL DETAIL ⚠1
No Scale

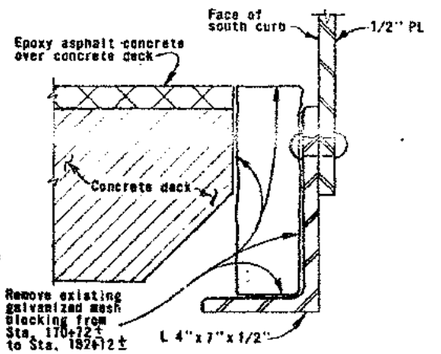

EXISTING SOUTH CURB BLOCKING
No Scale

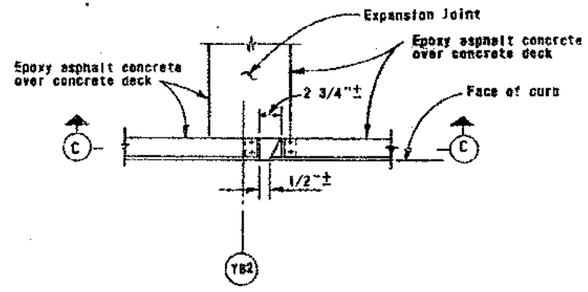

DETAIL 2 - PLAN
No Scale

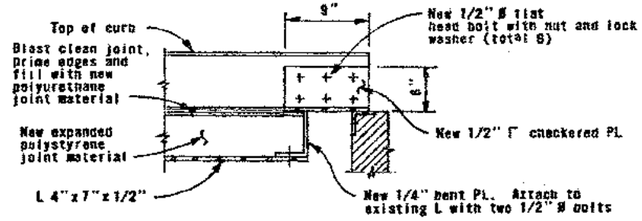

SECTION A-A
No Scale

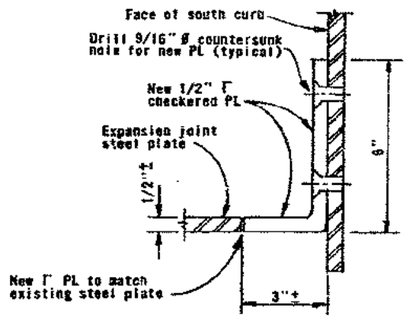

SECTION B-B
No Scale

NOTES

1. See LEGEND and ABBREVIATIONS shown on sheet 2.

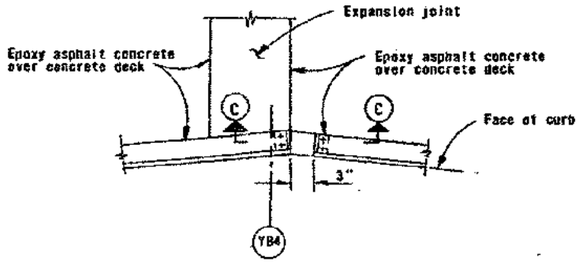

DETAIL 3 - PLAN
No Scale

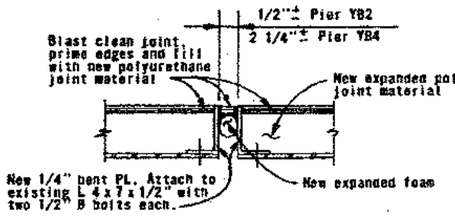

SECTION C-C
No Scale

Contract No.	04-026404
Date Accepted	3-23-79
As Built	with revision
Resident Engineer	S. COOPER
Division Chief	R. COFFMAN Date 5-16-79

0 8 THS 1 2 3 10 THS 4
SCALE IN INCHES ON ORIGINAL

MARK	DATE	REVISION	BY	CHK.
1	8-83	As built with revision	cfc	

STATE OF CALIFORNIA — BUSINESS AND TRANSPORTATION AGENCY — DEPARTMENT OF TRANSPORTATION

DIVISION | DESIGN | SPECIFICATION | IN CHARGE OF DESIGN | CHK. | REVISED

APPROVED December 9, 1977

SAN FRANCISCO - OAKLAND BAY BRIDGE
DECK DRAINAGE IMPROVEMENTS - YERBA BUENA ISLAND
LOWER DECK SOUTH CURB SEAL

SCALE	SHEET NO.	DRAWING NO.
As Shown	9	04-026404-9 R