6-1 COLUMN ANALYSIS CONSIDERATIONS

Columns designed in accordance with the Caltrans Bridge Design Specifications (BDS) and the Caltrans Seismic Design Criteria (SDC) may result in a dense reinforcement arrangement. This often leads to reinforcement congestion and may cause construction difficulties. To avoid these concerns, there are a number of options a designer should consider before deciding on parameters such as bent location, column size, number of columns per bent and the column spacing best suited for the structure. Some of these options, along with recommendations, are discussed in the following paragraphs. These recommendations generally apply to long or narrow structures. The designer should be aware that column design considerations based on Group I-VI loads may sometimes contradict those for Group VII loads.

Span lengths, column sizes, and column architectural features are sometimes selected rather arbitrarily when the General Plan is first developed. The next step is to determine whether these arbitrary decisions will be practical. Preliminary analyses using the Bridge Design System and the BENT program should be made together with preliminary dynamic analyses. These analyses may be rather limited in scope in the early design stage. When a more detailed dynamic analysis is required, the analysis model should encompass the entire structure, including connecting ramps subject to program limitations. For dynamic analysis, long structures may be divided into groups of frames, but individual groups must overlap. In addition, supports and the boundary conditions for each group should be properly modeled using suitable springs.

The results of preliminary analyses should be reviewed for critical column loadings, both for Group I-VI and Group VII loadings. Columns which require maximum reinforcement (for Group I-VI loads) should be further analyzed using the YIELD program. Non-linear analyses of a critical bent (using XSECTION and WFRAME) may be required if ductility requirements are a concern. Based on these preliminary analyses, if the longitudinal and transverse reinforcement in columns is found to be acceptable, then the geometric and structural frame arrangements can be assumed to be satisfactory. However, if the column reinforcement exceeds acceptable limits, then the following alternatives should be considered:

1) In multi-column bents, pin columns at the footings. In single-column bents, pinning the base of the column adjacent to abutments may be considered.
2) Add additional columns per bent.
3) Use broader single columns.
4) For single column bents, consider incorporating continuity at the top of columns in analyses.
5) Utilize torsional rigidity to reduce P-load effects on single column bents.
6) In multi-column bents, increase column size.
7) Use higher strength concrete for columns.

8) Shorten span lengths by adding bents.

9) Add hinges or consider temporary construction hinge to reduce sensitivity to shortening.

10) Increase the elastic length of short columns.

11) Use pile shafts in lieu of footings.

12) Reduce prestress and thermal force coefficients where appropriate.

The designer should consider the best option that is applicable to a specific project. In addition to the above-mentioned options, the following two items may have an impact on decisions made by the designer in designing columns:

1) Aesthetic features (Column Flares).

2) Outrigger bents.

The designer may adopt any one or a combination of the above-mentioned options. While cost should be a primary consideration, it should not be the only criterion. Some of the options recommended above may not appear to be cost effective, but may result in savings in other bridge elements such as footings, and lead to an overall efficient design. The designer should be aware that any one of the above-mentioned options may solve one problem, but may cause another.

The following is a brief review of each option, citing both beneficial and detrimental effects.

1) Pin columns at the base: This option should be the norm for all multi-column bents. Pinned columns lead to a softer structure in comparison to fixed columns and result in larger drift (lateral displacement) particularly under Group VII loads. In addition, the moments at the top of the columns due to Group I-VI loads would increase. Consequently, these columns may be subjected to higher moment magnification factors in the design stage. The combined effects of increased group load moments at the fixed end and moment magnification could require an increase in primary reinforcement.

In single column bents, columns may be pinned if the abutment or the adjacent bent can assume increased demands and retain stability. Pinned columns must be supported during construction. This option should be considered only as a last resort. End columns in frames can also be designed to slide on the footing during prestressing and then externally keyed to the footing.

The biggest advantage of pinning the column at the footing is that it leads to a reduction in the foundation size and reduced footing costs. Pot bearings or base isolation bearings, though expensive, may provide a satisfactory solution in some situations.

2) *Add more similar columns per bent:* This alternative usually leads to a reduced column size which may reduce the longitudinal stiffness and moments, but may increase the transverse frame stiffness. Adding columns may not be aesthetically pleasing. While aesthetics is important, it should not take precedence over structural integrity. In single-column bents, addition of a second column may be the appropriate solution (for narrow structures, two closely spaced columns may not leave room for flares). Axial tension due to overturning effects may reduce shear capacity in multi-column bents, but other benefits may prevail.

3) *Use broader single columns/oblong columns:* This option may be considered as an alternative to adding a second column to a single-column bent. The oblong column may be pinned with reference to longitudinal response to reduce foundation costs. Such columns typically have interlocking reinforcement cages.

4) *For single-column bents, consider incorporating continuity at the top of columns:* For analysis under Group I-VI loads, the designer should consider the restraining effects of adjacent spans. Box girder bridges on single column bents should not be considered as true cantilevers (0.99 Distribution Factor) in the transverse direction in the YIELD program. The torsional rigidity of a box girder provides significant restraint and a D.F. of 0.90 can conservatively be used without a frame analysis. This will greatly reduce the column moment and reinforcement. The designer should use STRUDL analysis to obtain actual lower D.F. values if slenderness causes a significant moment magnification.

5) *Utilize torsional rigidity and distribution to reduce P-load effects on single-column bents:* STRUDL analyses show that superstructure rigidity reduces transverse moments significantly in many single column bent structures under Group I-VI loads as compared to the typical cantilever bent analysis. These analyses also show that a significant portion of wheel loads, applied at a bent near the edge of deck, is distributed to adjacent bents. Therefore, the designer should take advantage of such analyses when conventional cantilever analysis shows that the selected column size/shape is inadequate for the applied Permit Truck load. Trial STRUDL analyses have also shown that the reactions from distributed Permit loads are similar to reactions caused by HS loads analyzed in the usual cantilever manner. Therefore, an approximate alternative to a detailed analysis for Permit loads in the maximum transverse load case, is to use only HS live loadings to analyze the bent as a cantilever. Bridges with unusually large span-to-width ratios (i.e., connector ramps) are not good candidates for this approximate method.

6) *In multi-column bents, use larger columns:* A larger column section will allow more room to place main reinforcement and provide greater shear capacity for Group I-VI loads. However, increasing the column size would also draw more moment and shear. For Group VII loads, in addition to increased stiffness, a possible increase in plastic moment would lead to an increase in footing and superstructure costs. This option may not be viable if horizontal roadway clearances are tight or when existing bridges are being widened.

7) *Use higher strength concrete for columns:* This option may be used as a means to reduce main reinforcement without significantly increasing stiffness. This will also increase the shear capacity (unless tensile axial loads exist). However, the resulting increase in plastic moment capacity may lead to increased footing and superstructure costs.

   The designer should consider the economics of specifying more than one high strength concrete in the design of prestressed concrete bridges.

   In general, the designer should not use12 mm (No. 4) primary aggregate in concrete as a means to allow a more closely spaced, dense network of column reinforcement. This type of material is not readily available in all geographical areas and may also require the use of concrete additives to develop assumed concrete strength.

8) *Shorten spans lengths and add bents:* This option should be considered primarily for viaducts. Other long structures (connector ramps) generally have bent locations dictated by facilities that are crossed (such as roadways and rail roads). Shorter spans can reduce structure depth (i.e., dead load) and proportionately reduce seismic loads to the bents. The applicability of both, conventionally reinforced as well as prestressed concrete sections should be considered. While prestressed concrete sections typically result in a smaller dead load, they cause secondary prestress moments in columns and may require more expensive joint seals due to increased movement ratings at the joints. Short prestressed spans reduce dead load, but the superstructure depth may be too shallow to permit the development of column bars.

9) *Add hinges:* This option should be considered primarily for long, prestressed structures. Adding a hinge will effectively shorten all frames in a structure. The end bents of the frames, especially the short bents near abutments, will draw less prestress moment. The structure may become more flexible resulting in increased deflections under Group VII loads, but would also benefit from reduced force levels due to a lengthened primary response period. Intermediate construction hinges, strategically placed on selected reinforced concrete segments within long prestressed structures, allow for creep forces to stabilize before connecting frames together. In general, it is preferable to avoid/minimize hinges so as to maintain structure continuity which is particularly desirable under seismic loads.

10) *Increase the elastic length of short columns:* Significant moment reductions can be achieved, especially in prestressed concrete structures, by increasing the column elastic length. This can be accomplished by taking advantage of footing translation due to elastic and plastic soil deformation, lowering the footing elevation, or both. If the footing is lowered, passive earth resistance on piles and footings will increase and result in less translation. Soil springs can be used with the STRUBAG program to model foundation releases from full fixity.

11) *Use pile shafts in lieu of footings:* The benefits of this option are similar to increasing the column lengths. Generally, the resulting increase in flexibility will lead to reduced seismic forces, but displacements will increase. Shaft construction may become more complicated in the presence of shallow groundwater and/or loose sand. Elastic column lengths can be increased by requiring the top of shaft to be below the ground-line and by specifying a spacer casing (isolation) around the underground portion of column. However, the consequences of plastic hinging below ground-line should be considered.

    Shafts which do not require unusual construction techniques are less expensive than fixed pile footings.

12) *Reduce prestress and thermal force coefficients:* There are several theories describing the effects of prestress and thermal forces on a structure. Some experts feel that initial moments in columns due to prestress shortening eventually creep to nearly zero. Since thermal stresses develop gradually, there is some plastic relief. In addition to moment reductions due to creep, the elasto-plastic characteristics of the soil surrounding the foundations also permit some moment relief for the columns. Some reduction in these forces should be utilized. Since there is no agreement on allowable reductions, it is suggested that moments and shears due to prestressing could be reduced by 50%, and those due to thermal action be reduced by 25%. These values are considered reasonable when applied to fixed foundations. When allowing limited foundation release using springs or some foundation translation, or if shafts are being used, the prestress and thermal forces should not be adjusted as radically. Adjustments must be made consistent with the analysis model.

Additional considerations which may impact column type selection, analysis and design:

1) *Aesthetic features*: Aesthetic features often require fascia concrete such as flares. In general, column flares should be isolated from the superstructure with a horizontal gap as shown in Attachment 1, unless structural considerations require that the flares be monolithic with the superstructure. The concrete in the flare region outside the column core (flare concrete) shall be adequately reinforced with flare reinforcement to minimize shrinkage and temperature related cracks as well as to prevent the separation of flares from the column core at design displacement ductility levels (approximately, a ductility level of 4). Flare reinforcement is the additional reinforcement (longitudinal and transverse) provided in the flare region outside the confined column core reinforcement. When a gap is provided, the contribution from flares should not be included in service load analysis as well as in seismic analysis. The flare details are shown in Attachment 1.

   Tests on 40% scaled models of columns with isolated flares have shown that these columns have a large displacement ductility capacity [University of California, San Diego, Report # SSRP-97/06]. These tests also reveal that the plastic hinge forms in the column in the concentrated region of the flare gap. However, due to the confining effects of the bent cap and the column flare, the short plastic hinge length can still provide the column with adequate displacement ductility capacity.

   Monolithic flares (structural flares) should be avoided where possible for the following reasons:

   a) In columns where the flare is improperly designed and detailed, it is likely that the plastic hinge may form at the base of the column flare (instead of forming at the top of the column). This not only increases the shear demand on the column, but also results in severe loss of bridge deck profile if plastic hinge failure were to occur. While proper design and detailing assures that the probability of failure of a plastic hinge is extremely low, it is possible that plastic hinges may fail due to unforeseen overloads.

   b) Monolithic flares lead to an increase in force demands on adjacent superstructure and substructure elements, and may result in reduced displacement ductility of bents.

      With proper justification, the Design Engineer may adopt monolithic flares. The approval of Chief, Office of Structure Design shall be obtained before a decision to adopt monolithic flares is made.

When monolithic flares are approved for adoption, these flares shall be designed and detailed so that they are unlikely to separate from the column even at design displacement ductility levels. In such structural flares, the flare reinforcement (longitudinal and transverse) shall be determined in accordance with the column performance requirements specified in the Caltrans Seismic Design Criteria. The contribution to column capacity and stiffness from the structural flares shall be modeled and incorporated in the seismic analysis to identify plastic hinge locations. The Design Engineer shall ensure that the plastic hinge forms in the column and not in the superstructure. Furthermore, through proper design and detailing, the Design Engineer should ensure that the plastic hinge forms at the top of the column and not at the base of the flare.

2) *Outrigger bents:* Outriggers are extremely vulnerable under seismic forces because they do not have the superstructure concrete enclosure at the column-cap joint. The joint must be adequately confined using closed ties with seismic hooks to prevent degradation during plastic hinging. Also, the joint must be designed and detailed to ensure that a plastic hinge forms in the column and not in the cap in accordance with the guidelines in SDC.

The exposed portion of the cap must be properly designed for torsion and reinforced with closed seismic ties if torsion is significant. The corner joint must be capable of resisting all torsion, moment, and shears occurring at the joint. Adequate confinement must be provided for developing bars from both the outrigger and column.

In conclusion, it is important to emphasize that the designer be aware of all the preceding factors which are applicable to the structure being analyzed. Attention should be given to producing a dynamic model representing actual site conditions rather than assumed general practice methods when column design problems arise. Secondary effects should be investigated when large column deflections are indicated by analysis. The columns should be investigated early in the design process. Relegating column design to the end can result in redesign and many wasted hours of work.

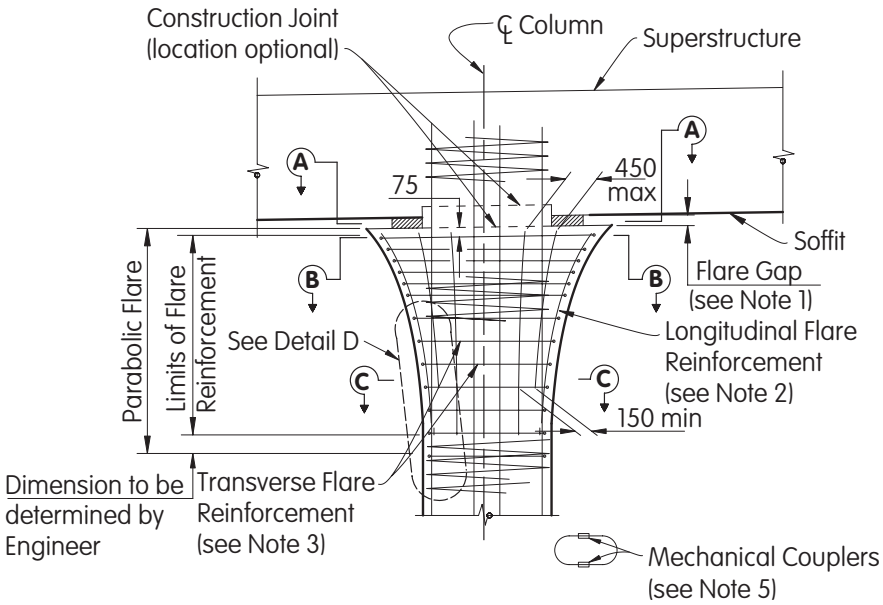

Flare Column Details-1

Table 1		
Column Dia or "D"(meter)	Transverse Flare Reinforcement	
	Upper Flare Region (Top 1/3 Flare Height)	Lower Flare Region (Lower 2/3 Flare Height)
1.22	#19 @ 90	#13 @ 205
1.68	#22 @ 90	#16 @ 205
2.13	#25 @ 90	#16 @ 205

Notes to Designer:

1. Typically, the thickness of the flare gap should be 50 mm. However, if significant relative rotation between the cap and the column is expected, then the required gap thickness to accommodate this rotation should be calculated and provided.

2. The longitudinal flare reinforcement provided is nominal. The maximum spacing between longitudinal flare reinforcement shall not exceed 450 mm; and the spacing shall not be less than 150 mm. (Eg. #19 at a maximum of 450 mm; minimum 150)

3. The recommended transverse flare reinforcement ratio in the upper 1/3 of the flare height is = 0.40% $\pm$ 0.05%, while that ratio for the lower 2/3 of the flare height should not be less than = 0.075% $\pm$ 0.025%. See Table 1 for typical transverse reinforcement in the flare region of a circular columns with a standard one-way flare (BDD 7-31). This reinforcement is in addition to the required prismatic core confinement/shear reinforcement. The column flare details have been developed after reviewing the results of laboratory tests.

4. Minimum clear cover shall conform to requirements of BDS 8.22.

5. While laboratory tests were conducted with the transverse flare reinforcement having a lap of approximately 40 times bar diameter, the use of mechanical couplers (service splice) is recommended. When a column is subjected to multi-directional excitation, lap splices in transverse flare reinforcement may not be reliable if flare concrete spalls. To minimize reinforcement congestion, the location of mechanical couplers shall be staggered.

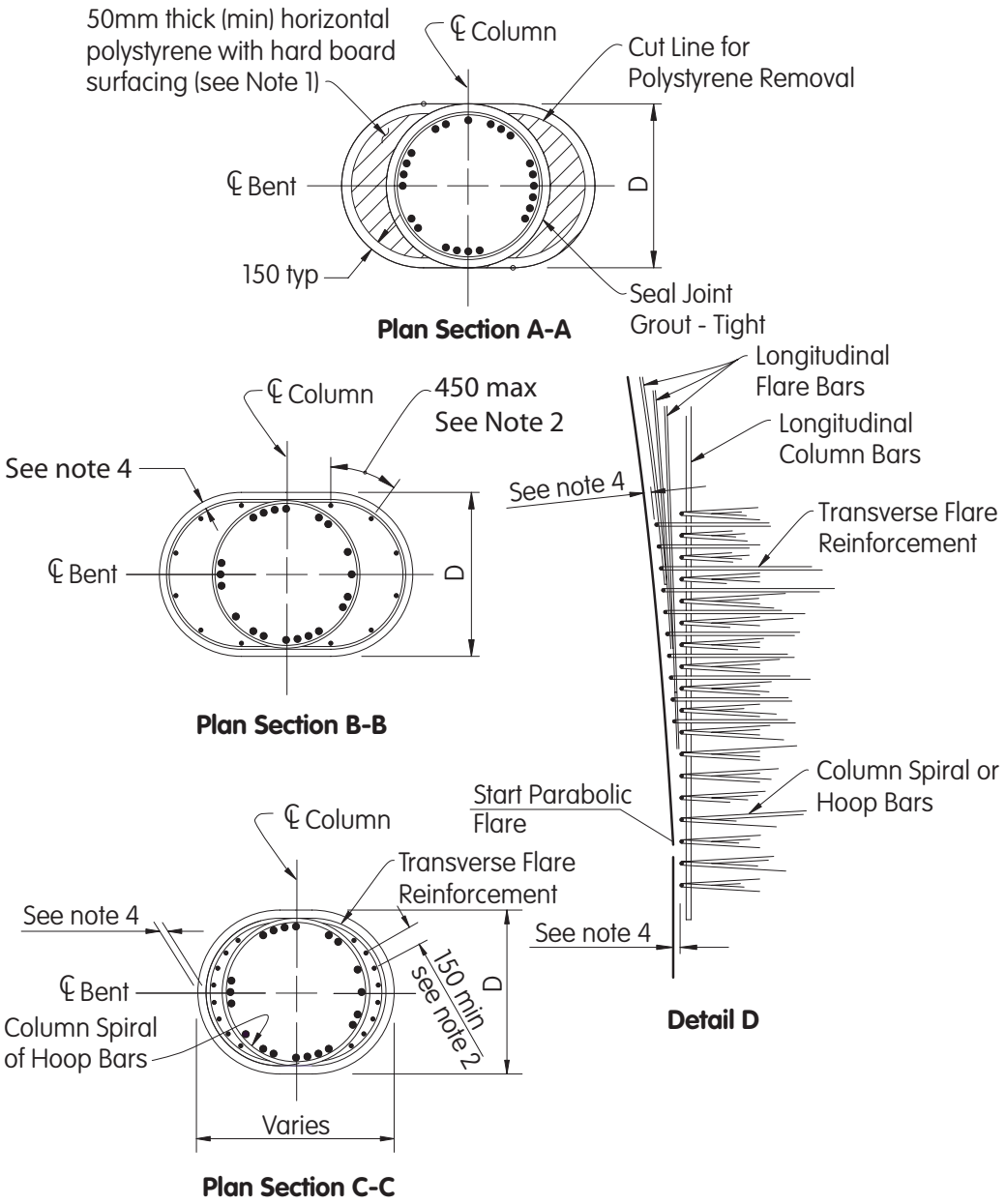

Flare Column Details-2

(original signed by Richard Land)

Richard Land
Deputy Chief, Engineering Services,
Structure Design

MR: pkml