		Support Type	Length of Span "L"														
			16	18	20	22	24	26	28	30	32	34	36	38	40	42	44
BENT CAP	45T Pile Spacing*	II	7 1/2	7 1/4	6 1/2	6	5 3/4	5 1/4	5	4 3/4	4 1/2	4 1/4	4				
	"A" bars (Skew 0-20)	II	# 7	# 7	# 7	# 7	# 7	# 7	# 7	# 6	# 7	# 6	# 6				
	"A" bars (Skew 21-35)	II	# 8	# 8	# 7	# 7	# 7	# 7	# 7	# 6	# 7	# 7	# 6				
	"A" bars (Skew 36-50)	II	# 8	# 8	# 8	# 8	# 8	# 8	# 8	# 7	# 7	# 7	# 7				
	Stirrup Spacing	II	#5@12	#5@12	#5@12	#5@12	#5@12	#5@12	#5@12	#5@6	#5@7	#5@7	#5@9				
	70T Pile Spacing*	II	12	11 1/4	10 1/4	9 1/2	8 3/4	8 1/4	7 3/4	7 1/2	7	6 1/2	6	5 3/4	5 1/2	5	4 3/4
	"A" bars (Skew 0-20)	II	# 8	# 8	# 8	# 8	# 8	# 8	# 8	# 8	# 7	# 7	# 7	# 7	# 7	# 7	# 7
	"A" bars (Skew 21-35)	II	# 9	# 9	# 8	# 8	# 8	# 8	# 8	# 8	# 8	# 8	# 7	# 7	# 7	# 7	# 7
	"A" bars (Skew 36-50)	II	# 10	# 10	# 10	# 9	# 9	# 9	# 9	#9	# 9	# 8	# 8	# 8	# 7	# 8	# 8
	Stirrup Spacing	II	#5@8	#5@8	#5@8	#5@7	#5@7	#5@7	#5@7	#6@6	#5@4	#5@4	#5@5	#5@6	#5@7	#5@10	#5@10
	45T Pile Spacing*	III	8 1/4	7 3/4	7 1/2	7	6 1/2	6	5 3/4	5 1/2	5 1/4	5	4 3/4	4 1/2	4		
	"A" bars (Skew 0-20)	III	# 7	# 7	# 7	# 7	# 7	# 7	# 7	# 6	# 7	# 7	# 6	# 6	# 6		
	"A" bars (Skew 21-35)	III	# 8	# 8	# 8	# 8	# 8	# 7	# 7	# 7	# 7	# 7	# 7	# 6	# 6		
	"A" bars (Skew 36-50)	III	# 8	# 8	# 8	# 8	# 8	# 8	# 8	# 8	# 7	# 7	# 7	# 7	# 7		
	Stirrup Spacing	III	#5@12	#5@12	#5@12	#5@12	#5@12	#5@12	#5@12	#5@6	#5@7	#5@8	#5@10	#5@11	#5@12		
	70T Pile Spacing*	III			11 3/4	10 3/4	10	9 1/2	9	8 1/2	8	7 3/4	7 1/4	6 3/4	6 1/4	6	5 1/2
	"A" bars (Skew 0-20)	III			# 8	# 8	# 8	# 8	# 8	# 8	# 8	# 7	# 7	# 7	# 7	# 7	# 7
	"A" bars (Skew 21-35)	III			# 9	# 9	# 8	# 8	# 8	# 9	# 8	# 8	# 8	# 7	# 7	# 8	# 7
	"A" bars (Skew 36-50)	III			# 10	# 10	# 9	# 9	# 9	# 10	# 9	# 9	# 8	# 8	# 8	# 8	# 8
	Stirrup Spacing	III			#5@8	#5@8	#5@8	#5@7	#5@7	#6@6	#5@4	#5@4	#5@5	#5@5	#5@7	#5@8	#5@10
	45T Pile Spacing*	V	7 1/2	6 3/4	6 1/4	5 3/4	5 1/2	5	4 3/4	4 1/2	4 1/4						
	"A" bars (Skew 0-20)	V	# 7	# 7	# 7	# 7	# 7	# 7	# 7	# 6	# 6						
	"A" bars (Skew 21-35)	V	# 8	# 7	# 7	# 7	# 7	# 7	# 7	# 6	# 7						
	"A" bars (Skew 36-50)	V	# 8	# 8	# 8	# 8	# 8	# 8	# 8	# 7	# 7						
	Stirrup Spacing	V	#5@12	#5@12	#5@12	#5@12	#5@12	#5@12	#5@12	#5@6	#5@7						
	70T Pile Spacing*	V	11 1/2	10 1/2	10	9	8 1/2	8	7 1/2	7	6 1/2	6	5 3/4	5 1/4	5	4 3/4	4 1/4
	"A" bars (Skew 0-20)	V	# 8	# 8	# 8	# 8	# 8	# 8	# 8	# 8	# 7	# 7	# 7	# 7	# 7	# 7	# 6
	"A" bars (Skew 21-35)	V	# 9	# 8	# 8	# 8	# 8	# 8	# 8	# 8	# 8	# 7	# 7	# 7	# 7	# 7	# 7
	"A" bars (Skew 36-50)	V	# 10	# 10	# 9	# 9	# 9	# 9	# 9	# 9	# 9	# 8	# 8	# 8	# 7	# 8	# 8
	Stirrup Spacing	V	#5@8	#5@8	#5@8	#5@7	#5@7	#5@7	#5@7	#6@6	#5@4	#5@4	#5@5	#5@6	#5@8	#5@9	#5@10
	45T Pile Spacing*	VI	9 1/4	8 3/4	8 1/4	7 3/4	7 1/2	7	6 1/2	6 1/4	5 3/4	5 1/2	5 1/4	4 3/4	4 1/2	4 1/4	4
	"A" bars (Skew 0-20)	VI	# 7	# 7	# 7	# 7	# 7	# 7	# 7	# 6	# 7	# 7	# 6	# 6	# 6	# 5	# 5
	"A" bars (Skew 21-35)	VI	# 8	# 8	# 8	# 8	# 8	# 7	# 7	# 7	# 7	# 7	# 7	# 6	# 6	# 6	# 6
	"A" bars (Skew 36-50)	VI	# 8	# 8	# 8	# 8	# 8	# 8	# 8	# 8	# 7	# 7	# 7	# 7	# 7	# 7	# 7
	Stirrup Spacing	VI	#5@12	#5@12	#5@12	#5@12	#5@12	#5@12	#5@12	#5@6	#5@9	#5@10	#5@12	#5@12	#5@12	#5@12	#5@12
	70T Pile Spacing*	VI					11 1/2	11	10 1/4	9 3/4	9	8 1/2	8 1/4	7 1/2	7 1/4	6 3/4	6 1/2
	"A" bars (Skew 0-20)	VI					# 8	# 8	# 8	# 8	# 8	# 7	# 7	# 7	# 7	# 7	# 7
	"A" bars (Skew 21-35)	VI					# 9	# 9	# 8	# 9	# 8	# 8	# 8	# 7	# 7	# 8	# 7
	"A" bars (Skew 36-50)	VI					# 10	# 10	# 9	# 10	# 9	# 9	# 9	# 8	# 8	# 8	# 8
	Stirrup Spacing	VI					#5@8	#5@8	#5@8	#5@4	#5@4	#5@5	#5@5	#5@6	#5@7	#5@9	#5@10
ABUTMENT	45T Pile Spacing*	I	9	8 3/4	8 1/2	8 1/4	8	8	7 3/4	7 1/2	7 1/4	7	6 3/4	6 1/2	6 1/4	6	5 3/4
	70T Pile Spacing*	I							12	11 1/2	11 1/4	11	10 1/2	10	9 3/4	9 1/4	9
	45T Pile Spacing*	IV	9 3/4	9 1/2	9 1/4	9	8 3/4	8 3/4	8 1/2	8 1/4	8	8	7 3/4	7 1/2	7 1/4	7	6 3/4
	70T Pile Spacing*	IV															
	45T Pile Spacing*	VII	8 1/2	8	7 3/4	7 1/2	7 1/4	7	6 3/4	6 1/2	6 1/4	6	5 3/4	5 1/2	5 1/4	5	4 3/4
	70T Pile Spacing*	VII				11 3/4	11 1/2	11	10 1/2	10	9 3/4	9 1/4	9	8 1/2	8	7 3/4	7 1/4
		Support Type	Length of Span "L"														
			16	18	20	22	24	26	28	30	32	34	36	38	40	42	44

* Note: Pile spacings are for no-skew condition

STANDARD SLAB BRIDGE SUPPORT DESIGN DATA

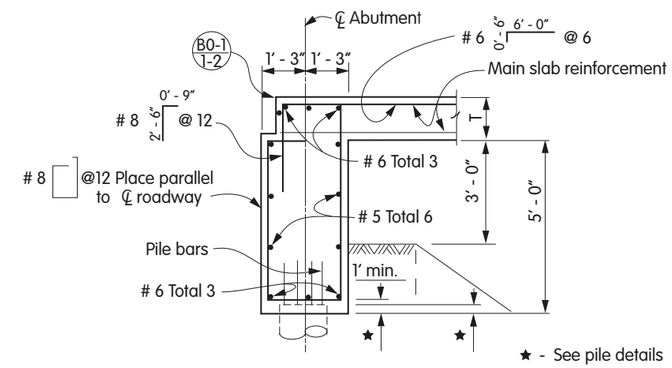

ABUTMENT SECTION

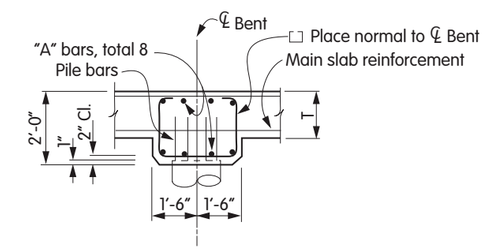

BENT CAP - SPANS ≤28'

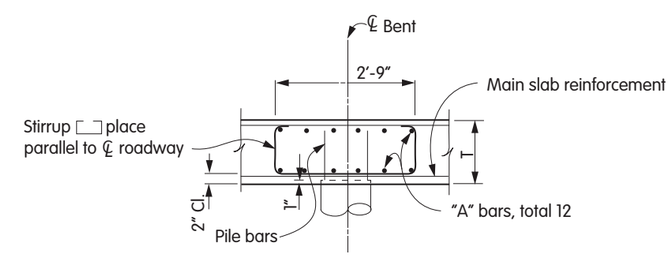

BENT CAP - SPANS >28'