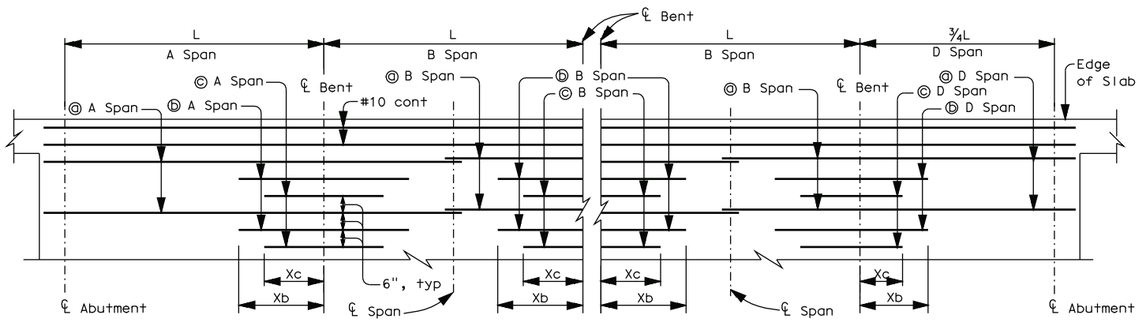

REINFORCEMENT - TOP OF SLAB

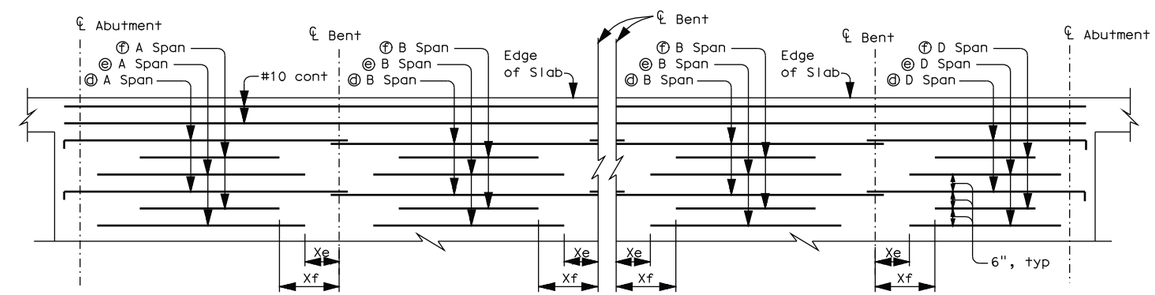

REINFORCEMENT - BOTTOM OF SLAB

Notes:

(1) Rebar length includes allowance for splices as shown on Reinforcement details.

(2) Add ½" for corrosion protection and adjust concrete quantity.

(3) D span lengths are ¾ of the span length shown in the heading

(4) Live Loading: HL93 and P15 design load.

L=Length of Span			16′			18′			20′			22′			24′			26′			28′			30′			32′			34′			36′			38′			40′			42′			44′		
Type of Span			A	B	D	A	B	D	A	B	D	A	B	D	A	B	D	A	B	D	A	B	D	A	B	D	A	B	D	A	B	D	A	B	D	A	B	D	A	B	D	A	B	D	A	B	D
REINFORCEMENT	Top of Slab ⓐ bars	Size	#6	#6	#6	#6	#6	#6	#7	#6	#6	#7	#7	#6	#7	#7	#6	#8	#7	#7	#8	#8	#7	#8	#8	#7	#9	#8	#8	#9	#8	#8	#9	#9	#8	#9	#9	#8	#10	#9	#9	#10	#9	#9	#10	#9	#9
		Length	26½′	19′	22½′	29½′	21′	25′	32½′	23′	27½′	35½′	25′	30′	39′	28½′	32½′	42½′	30½′	35½′	45½′	33′	38′	48½′	35′	40½′	52′	37′	43′	55′	39′	45′	58′	42½′	48½′	67½′	44½′	51′	74′	46½′	54′	76½′	48½′	56½′	79½′	50½′	59′
		Size	#6	#6	#6	#6	#6	#6	#6	#6	#6	#7	#6	#6	#7	#6	#6	#7	#7	#6	#8	#7	#7	#8	#7	#7	#8	#7	#7	#9	#8	#8	#9	#8	#8	#9	#8	#8	#9	#9	#8	#9	#9	#8	#10	#9	#8
		Length	18½′	18′	16′	18½′	17′	16′	20′	18′	17′	20½′	20′	17½′	19½′	17′	18½′	20½′	18′	20′	22½′	19′	19′	24′	21′	21′	25½′	22′	16½′	24′	23′	20′	28½′	25½′	21½′	30′	26′	22½′	27′	27′	23′	29′	29′	24½′	30′	30′	25½′
		Xb	7½′	9′	8½′	8½′	8½′	9½′	9′	9′	10′	8′	10′	9½′	8½′	8½′	10′	9′	9′	11′	10′	9½′	9½′	10½′	10½′	10½′	11′	11′	8½′	12′	11½′	11½′	12½′	15′	12½′	13′	13′	13′	13½′	13½′	13½′	14½′	14½′	14½′	15′	15′	15′
		Size	#6	#6	#6	#6	#6	#6	#6	#6	#6	#6	#6	#6	#7	#6	#6	#7	#7	#6	#7	#7	#6	#8	#7	#7	#8	#7	#7	#8	#8	#7	#8	#8	#7	#9	#8	#8	#9	#8	#8	#9	#8	#8	#9	#9	#8
		Length	10½′	9′	9′	10′	10′	9′	10′	10′	9½′	11′	11′	10½′	12′	12′	12½′	13′	13′	11½′	12′	14′	10½′	15′	15′	13½′	16′	16′	12′	14½′	17′	12½′	18′	12′	13′	19′	13′	14′	16′	14′	14′	17′	14′	15′	15′	15′	16′
		Xc	4½′	4½′	5′	5′	5′	5′	5′	5′	5½′	5½′	5½′	6′	6′	6′	6½′	6½′	6½′	5′	5′	7′	5½′	7½′	7½′	6′	8′	8′	6½′	6′	8½′	6½′	9′	6′	7′	9½′	6½′	7½′	6½′	7½′	7½′	7′	7′	8′	7½′	7½′	8½′
	Bottom of Slab ⓓ bars	Size	#7	#6	#6	#7	#6	#6	#8	#7	#6	#8	#7	#6	#8	#7	#7	#8	#7	#7	#8	#7	#7	#9	#7	#7	#9	#7	#7	#9	#7	#7	#9	#8	#7	#9	#8	#7	#9	#8	#8	#9	#8	#8	#10	#8	#8
		Length	19½′	19′	15′	21½′	21′	16½′	24′	23½′	18′	26′	25½′	19½′	28½′	28½′	22′	30½′	29½′	23½′	32′	31½′	24½′	35′	33½′	26′	37′	35½′	28′	39′	37½′	29½′	41′	40′	30½′	43′	42′	32′	45′	44′	34′	47′	46′	35½′	49½′	48′	37′
		Size	#7	#6	#6	#7	#6	#6	#7	#6	#6	#7	#6	#6	#8	#6	#6	#8	#7	#6	#8	#7	#6	#8	#7	#7	#8	#7	#7	#8	#7	#7	#9	#7	#7	#9	#7	#7	#9	#8	#7	#9	#8	#7	#9	#8	#7
		Length	16′	16½′	12′	18′	16½′	13½′	19½′	18′	15′	21½′	19½′	16½′	23½′	21½′	17½′	25′	23′	19′	27′	25′	20½′	28½′	26½′	22′	27½′	28½′	20½′	39′	30′	25′	34½′	32′	23½′	36′	33½′	25′	38′	35′	26′	40′	37′	27½′	42′	39′	28½′
		Xe	0½′	0½′	0½′	0½′	1′	0½′	1′	1′	0½′	1′	1½′	0½′	1′	1½′	1′	1½′	1½′	1′	1½′	1½′	1′	2′	2′	1′	5′	2′	4′	5½′	2′	1′	2′	2′	4′	2½′	2½′	4½′	2½′	2½′	4½′	2½′	2½′	4½′	2½′	2½′	5′
		Size	#7	#6	#6	#7	#6	#6	#7	#6	#6	#7	#6	#6	#7	#6	#6	#8	#6	#6	#8	#6	#6	#8	#7	#6	#8	#7	#6	#8	#7	#6	#8	#7	#7	#8	#7	#7	#9	#7	#7	#9	#7	#7	#9	#7	#7
		Length	12′	12′	8′	13′	13′	10′	14½′	14′	12½′	15½′	16′	13½′	14½′	17′	11½′	18½′	18′	14′	19½′	20′	15′	20½′	21′	14′	22′	22′	15′	23½′	24′	18′	24½′	21′	19′	26′	22′	20½′	27′	23′	21′	28½′	25′	22½′	30′	26′	23½′
		Xf	3½′	2½′	2½′	4½′	2½′	3′	5′	3′	2½′	5½′	3½′	½′	6′	4′	4½′	6½′	4½′	5′	7′	4½′	5′	8′	5′	5½′	8½′	5′	6′	9′	5½′	6½′	9½′	9½′	6½′	10′	10′	7′	10½′	10½′	7½′	11′	11′	8′	11½′	11½′	8′
Distribution Steel		Size	#5			#5			#5			#5			#5			#5			#5			#5			#5			#5			#5			#5			#5			#5			#5		
		Spacing	12"			12"			12"			12"			12"			12"			12"			12"			12"			12"			12"			12"			12"			12"			12"		
Top of Slab Transverse Reinforcement		Size	#4			#4			#4			#4			#4			#4			#4			#4			#4			#4			#5			#5			#5			#5			#5		
		Spacing	18"			18"			18"			15"			15"			15"			12"			12"			12"			12"			18"			15"			15"			15"			15"		
T= Thickness of Slab(2)			10½"			11½"			12"			13"			14"			14½"			15½"			16"			17"			18"			18½"			19½"			20"			21"			22"		
Approx. quantities per foot of width		Concrete (ft³)	14.7	14.0	11.2	18.0	17.3	13.6	20.8	20.0	15.8	24.6	23.8	18.7	28.9	28.0	21.9	32.3	31.4	24.5	37.1	36.2	28.1	41.0	40.0	31.0	47.1	46.0	35.8	52.1	51.0	39.4	57.2	56.0	43.3	63.2	62.0	47.7	67.9	66.7	51.3	74.8	73.5	56.4	82.3	81.0	62.2
		Steel (lbs)	146	100	102	159	107	112	196	124	124	222	138	136	250	147	154	298	177	179	329	194	196	378	215	224	242	229	249	451	259	273	512	278	294	568	298	320	640	339	375	673	359	395	745	383	413
Camber at Mid-Span		A B - - -	.01′	--		.02′	--		.02′	.01′		.03′	.01′		.03′	.01′		.04′	.01′		.05′	.01′		.06′	.01′		.06′	.02′		.07′	.02′		.09′	.02′		.09′	.02′		.11′	.03′		.12′	.03′		.13′	.03′	
		- - B - -		--			.01′			.01′			.01′			.01′			.02′			.02′			.03′			.03′			.03′			.03′			.04′			.05′			.05′			.06′	
		- - - B D		--	--		.01′	--		.01′	.01′		.01′	.01′		.01′	.01′		.02′	.01′		.02′	.01′		.03′	.01′		.03′	.01′		.03′	.02′		.03′	.02′		.04′	.02′		.05′	.02′		.05′	.02′		.06′	.03′

SLAB DETAILS - MULTI SPAN