Appendix E
DUCTILE END-DIAPHRAGM IN GIRDER BRIDGE

E.1 DESIGN PROCEDURE

A seismic design strategy that relies on ductile end-diaphragms inserted in the steel superstructure can be, in some instances, an effective alternative to energy dissipation in the substructure. This could be the case, for example, when stiff wall-piers that can difficulty be detailed to have a stable ductile response are used as a substructure. The ductile diaphragms considered in this Article are therefore those that can be specially designed and calibrated to yield before the strength of the substructure is reached (substructural elements, foundation, and bearings are referred generically as "substructure" here). Many types of systems capable of stable passive seismic energy dissipation could be used for this purpose. Among those, eccentrically braced frames (EBF) (e.g. Malley and Popov 1983; Kasai and Popov 1986), shear panel systems (SPS) (Fehling et al. 1992; Nakashima 1995), and steel triangular-plate added damping and stiffness devices (TADAS) (Tsai et al. 1993), popular in building applications, have been studied for bridge applications (Zahrai and Bruneau 1999a, 1999b). These are illustrated in Figures E.1-1 to E.1-3. Although concentrically braced frames can also be ductile, they are not admissible in Article 7.7.8.2 or 8.7.8.2 because they can often be stronger than calculated, and their hysteretic curves can exhibit pinching and some strength degradation.

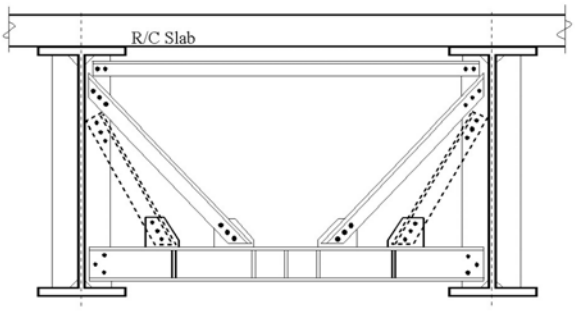

Figure E.1-1 EBF Ductile Diaphragms

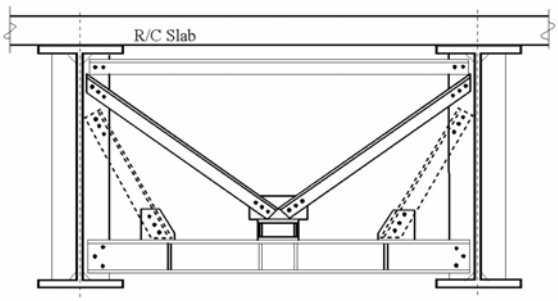

Figure E.1-2 SPS Ductile Diaphragms

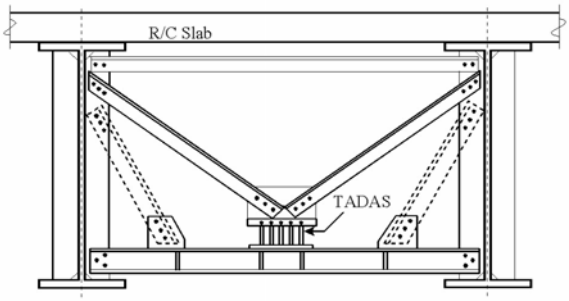

Figure E.1-3 TADAS Ductile Diaphragms

Note that the plate girders can also contribute to the lateral load resistance, making the end-diaphragm behave as a dual system. Therefore, the lateral stiffness of the stiffened girders, ΣK_g, must be added to the stiffness of the ductile diaphragms, ΣK_{DD} (usually much larger than the former), to obtain the lateral stiffness of the bridge end-diaphragms (adding the stiffnesses of both ends of the span), K_{ends}, i.e:

$$K_{ends} = \sum K_{DD} + \sum K_g \tag{E.1-1}$$

The stiffness contribution of a plate girder is obviously a function of the fixity provided to its top and bottom flanges by the deck slab and bearing respectively. If full fixity is provided at both flanges of the plate girder,

$$K_g = \frac{12EI_g}{h_g^3} \tag{E.1-2}$$

where I_g is the moment of inertia of the stiffened stub-girder (mainly due to the bearing web stiffeners) in the lateral direction, and h_g is its height. If one end is fully fixed, the other one pinned,

$$K_g = \frac{3EI_g}{h_g^3} \tag{E.1-3}$$

If both ends effectively behave as pin supports, K_g=0. Full fixity at the deck level in composite bridges is possible if shear studs are closely spaced and designed to resist the pull-out forces resulting from the moments developed at the top of the girders under lateral seismic forces. As for fixity at the bearing level, it obviously depends on the type of bearings present. However, even when infinitely rigid bearings are present, full fixity is still difficult to ensure due to flexibility of the girder flanges, as revealed by finite element analyses of subassemblies at the girder-to-bearing connection point.

It is the engineer's responsibility to determine the level of fixity provided at the ends of the girders. However, contrary to conventional design, the most conservative solution is not obtained when zero fixity is assumed because fixity also adds strength to the diaphragms, and the role of the ductile diaphragms is to limit the magnitude of the maximum forces that can develop in the substructure.

The lateral stiffness of the ductile diaphragms, $K_{DD,}$ depends on the type of ductile device implemented. For example, if a ductile SPS is used, the stiffness of one such end-diaphragm in a slab-on-girder bridge, K_{SPS}, can be obtained by:

$$K_{SPS} = \frac{E}{\dfrac{l_b}{2A_b\cos^2\alpha} + \dfrac{L_s}{4A_{bb}} + \left(\dfrac{h_l^3}{3I_l} + \dfrac{2.6h_l}{A_{s,l}}\right) + \dfrac{L_s\left(h_l + d_{bb}/2\right)^2}{12I_{bb}} + \dfrac{H\tan^2\alpha}{2A_g}} \tag{E.1-4}$$

where E is the modulus of elasticity, l_b and A_b are the length and area of each brace, α is the brace's angle with the horizontal, L_s is the girder spacing, d_{bb}, A_{bb} and I_{bb} are the depth, cross sectional area and moment of inertia for the bottom beam, h_l, I_l and $A_{s,l}$ are the length, moment of inertia and shear area of the link, and H and A_g are the height and area of the stiffened girders.

Similarly, lateral stiffness of the EBF and TADAS implemented as end-diaphragms of slab-on-girder bridges, K_{EBF} and K_{TADAS} , can be computed as follows:

$$K_{EBF} = \frac{E}{\dfrac{l_b}{2A_b\cos^2\alpha} + \dfrac{a}{2A_l} + \dfrac{e^2H^2}{12L_sI_l} + \dfrac{1.3eH^2}{aL_sA_{s,l}} + \dfrac{H\tan^2\alpha}{2A_g}} \qquad \text{(E.1-5)}$$

$$K_{TADAS} = \frac{E}{\dfrac{l_b}{2A_b\cos^2\alpha} + \dfrac{L_s}{4A_{bb}} + \dfrac{6h_T^3}{Nb_Tt_T^3} + \dfrac{L_s\left(h_T + d_{bb}/2\right)^2}{12I_{bb}} + \dfrac{H\tan^2\alpha}{2A_g}} \qquad \text{(E.1-6)}$$

where a is the length of the beam outside the link, e, I_l, A_l and $A_{s,l}$ are the length, moment of inertia, cross sectional and shear areas of the link, N, h_T, b_T, and t_T are the number, height, width and thickness of the TADAS plates, and all other parameters are as defined previously. Note that of the five terms in the denominator of Equations E.1-4 to E.1-6, the second and fifth which account for axial deformations of bottom beam and stiffened girders could be ignored, and the fourth (accounting for the rotation of bottom beam at midspan in SPS and TADAS) could have a small impact if the bottom beam was a deep and stiff beam, which is not however always the case.

For a bridge having a given number of girders, n_g, number of end-diaphragms implemented at each support, n_d, and girder spacing, L_s ,the design procedure for a ductile diaphragm consists of the following steps (illustrated in Figure E..1-4):

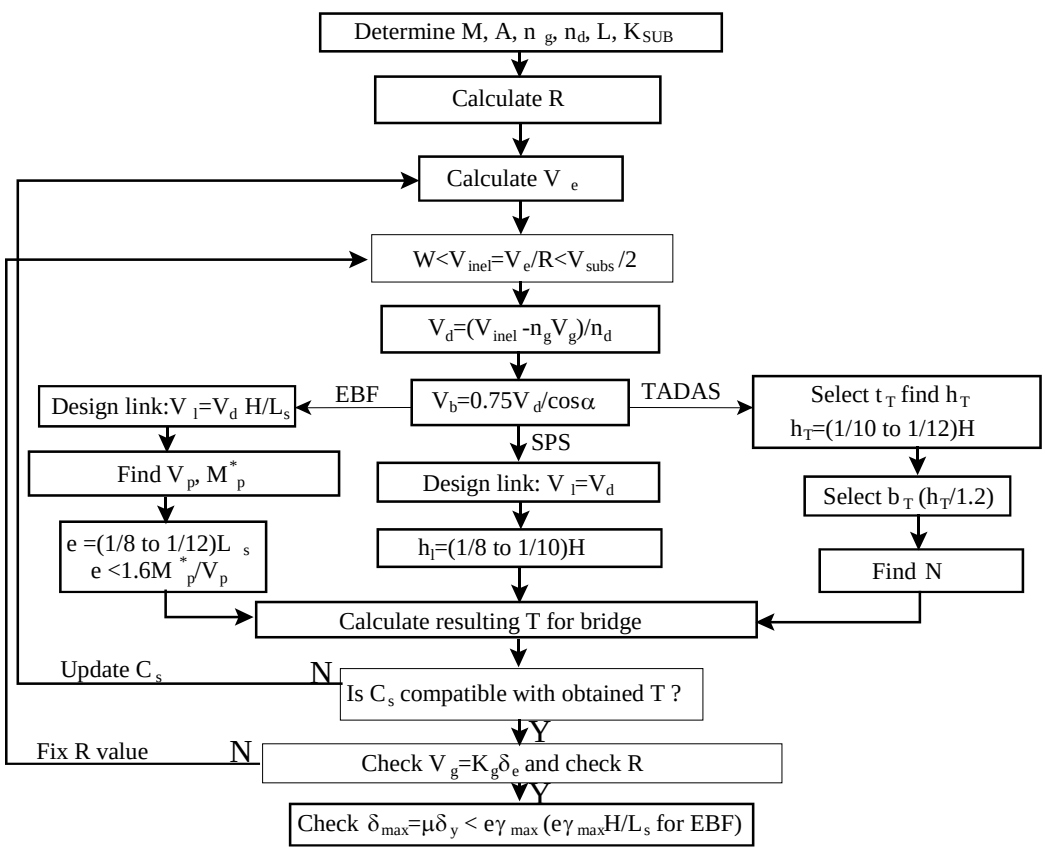

Figure E.1-4: Flow Chart of Design Process for Ductile Diaphragm

1) Determine the elastic seismic base shear resistance, V_e, for one end of the bridge (half of equivalent static force).

2) Calculate $V_{inel} = V_e / R$, where V_{inel} is the inelastic lateral load resistance of the entire ductile diaphragm panel at the target reduction factor, and R is the force reduction factor calculated as indicated in Article 7.7.8.2 or 8.7.8.2. Note that μ in that equation represents the ductility capacity of the ductile diaphragm as a whole, not the local ductility of the ductile device that may be implemented in that diaphragm.

3) Determine the design lateral load, V_d, to be resisted by the energy dissipation device (e.g. link beam or TADAS) at the target ductility level, by:

$$V_d = \frac{V_{inel} - n_g V_g}{n_d} \qquad \text{(E.1-7)}$$

where V_g is the lateral load resistance of one stiffened girder. Note that in short bridges, V_g can be a dominant factor that could overwhelm the resistance contribution provided by the special ductile diaphragm elements. In that perspective, it is recommended in this procedure that the bearing stiffeners at the support of these girders be trimmed to the minimum width necessary to satisfy the strength and stability requirements. Ideally, the braced diaphragm assembly should also be 5 to 10 times stiffer than the girders with bearing web stiffeners (even though ductility demand tends to be larger in stiffer structures) to prevent, or at least minimize, yielding in the main girders under transverse displacements. Note that in longer bridges, particularly those with a lesser number of girders per cross-section, the contribution of the girders to lateral load resistance is nearly insignificant.

4) Design all structural members and connections of the ductile diaphragm, with the exception of the seismic energy dissipation device, to be able to resist forces corresponding to $1.5V_d$ to account for potential overstrength of the ductile device due to strain hardening, strain rate effects and higher than specified yield strength. For example, braces should be designed to resist an axial compression force, V_b, equal to:

$$V_b = 1.5\left(\frac{V_d}{2\cos\alpha}\right) = 0.75\frac{V_d}{\cos\alpha} \qquad \text{(E.1-8)}$$

Likewise, for the SPS and TADAS systems, the bottom beam should be designed to resist a moment equal to $1.5\ V_d\,\mathrm{h_l}$ or $1.5\ V_d\,\mathrm{h_T}$. Moreover, for a given SPS or TADAS device, it is also advantageous to select a flexurally stiff bottom beam to minimize rigid-body rotation of the energy dissipating device and thus maximize hysteretic energy at a given lateral deck displacement.

5) Design the energy dissipating device. For the link beam in an EBF end-diaphragm, the shear force V_l in the link is:

$$V_l = \frac{H}{L_s} V_d \qquad \text{(E.1-9)}$$

The plastic shear capacity V_p of a wide flange steel beam is given by Equation E.1-10:

$$V_p = 0.58 F_y t_w d_l \tag{E.1-10}$$

where F_y is the yield stress of steel, t_w is the web thickness, and d_l is the depth of the beam. The moment simultaneously applied to the link must be less than the reduced moment capacity, M_p^*, of the link yielding in shear and equal to (Malley and Popov 1983):

$$M_p^* = t_f b_f F_y (d_l - t_f) \tag{E.1-11}$$

Since shear links are more reliable energy dissipators than flexural links (Kasai and Popov 1986; American Institute 1992), shear links are favored and their length is therefore limited by the equation below:

$$e < e_{\max} = 1.6 \frac{M_p^*}{V_p} \tag{E.1-12}$$

A link length, e, of 1/8 to 1/12 of the girder spacing, L_s, is recommended for preliminary design, the less restrictive value preferred for practical reasons (i.e. detailing constraints) in presence of closely spaced girders. Deeper link beams are also preferred as the resulting larger flexural stiffness enhances the overall stiffness of the ductile device, ensuring that its yield displacement is reached much before onset of yielding of the stiffened girders.
For a SPS, the above procedure would be followed with the obvious exception that $V_l = V_d$ and the height of panel should be limited to half of the value obtained by the above equation since the yielding link is only in single curvature, as opposed to double curvature for the EBF. A link height of 1/8 to 1/10 of the girder depth is recommended for preliminary design. However, for a TADAS system, replace step 5 with step 6:

6) Select a small plate thickness, t_T, based on available plate size. The shear strength, V_T, and the stiffness, K_T, of a TADAS device can be determined from (Tsai et al. 1993):

$$V_T = \frac{N b_T t_T^2 F_y}{4 h_t} \tag{E.1-13}$$

$$K_T = \frac{N E b_T t_T^3}{6 h_T^3} \tag{E.1-14}$$

where N, b_T, t_T and h_T are the number, base width, thickness and height of the triangular steel plates. The ratio of the above equations directly provides a relationship between h_T and t_T :

$$h_T = \sqrt{\frac{2 E t_T V_T}{3 F_y K_T}} \tag{E.1-15}$$

Here, $V_T = V_d$ and a h_T of $H/10$ to $H/12$ is recommended. Hence, if a reasonable estimate of the desirable K_T for the TADAS device is possible, t_T can be determined directly from h_T. In turn, b_T can be chosen

knowing that triangular plates with aspect ratio, h_T/b_T , between 1 and 1.5 are better energy dissipators, based on experimental results (Tsai et al. 1993). Finally, N can then be calculated. Small adjustments to all parameters follow as N is rounded up to the nearest whole number. Incidentally, many different yet appropriate TADAS systems could be designed within these constraints. Systems with thinner steel plates perform better.

7) Calculate the stiffness of the ductile end-diaphragm by using the equation presented earlier in this commentary. Review the assumed lateral period of the bridge, T, and update calculation as necessary.

8) For the maximum lateral drift of the bridge at the diaphragm location, δ_{max}, check that the maximum ductility capacity of ductile device is not exceeded. For shear links, this is commonly expressed in terms of the maximum link deformation angle, γ_{max} (easily obtained by dividing the maximum relative displacements of link ends by the link length), the maximum drift for the SPS and EBF diaphragms is respectively limited to:

$$\delta_{\max} < e\gamma_{\max} \tag{E.1-16}$$

$$\delta_{\max} < \frac{eH}{L_s}\gamma_{\max} \tag{E.1-17}$$

with generally accepted γ_{max} limits of 0.08 (AISC 1997). Note that, for the SPS diaphragms, the following alternative equation accounting for the rotation of bottom beam at the link connection may be more accurate when this factor has an important impact:

$$\delta_{\max} < e\left(\gamma_{\max} + \frac{V_d L_s (h_l + d_{bb}/2)}{12EI_{bb}}\right) \tag{E.1-18}$$

Should these limits be violated, modify the link's depth and length as well as the stiffness of the EBF or SPS diaphragm as necessary, and repeat the design process. Finally, a maximum drift limit of 2% of the girder height is also suggested here, at least until experimental evidence is provided to demonstrate that higher values are acceptable.

Note that the ductile energy dissipating elements should be laterally braced at their ends to prevent out-of-plane instability. These lateral supports and their connections should be designed to resist 6% of the nominal strength of the beam flange, i.e. $0.06F_y\, t_f\, b_f$ (AISC 1997). In addition, to prevent lateral torsional buckling of beams in the SPS, EBF, and TADAS end-diaphragms, the unsupported length, L_u, of these beams shall not exceed $200b_f/\sqrt{F_y}$ where b_f is the width of beam flange in metre and F_y is the yield strength of steel in MPa.