14.1 SCOPE

This Section contains requirements for the design and selection of structural bearings and deck joints.

Units used in this Section shall be taken as kip, in., rad., °F, and Shore Hardness, unless otherwise noted.

14.2 DEFINITIONS

Bearing—A structural device that transmits loads while facilitating translation and/or rotation.

Bearing Joint—A deck joint provided at bearings and other deck supports to facilitate horizontal translation and rotation of abutting structural elements. It may or may not provide for differential vertical translation of these elements.

Bronze Bearing—A bearing in which displacements or rotations take place by the sliding of a bronze surface against a mating surface.

Cotton-Duck-Reinforced Pad (CDP)—A pad made from closely spaced layers of elastomer and cotton-duck, bonded together during vulcanization.

Closed Joint—A deck joint designed to prevent the passage of debris through the joint and to safeguard pedestrian and cycle traffic.

Compression Seal—A preformed elastomeric device that is precompressed in the gap of a joint with expected total range of movement less than 2.0 in.

Construction Joint—A temporary joint used to permit sequential construction.

Cycle-Control Joint—A transverse approach slab joint designed to permit longitudinal cycling of integral bridges and attached approach slabs.

Damper—A device that transfers and reduces forces between superstructure elements and/or superstructure and substructure elements, while permitting thermal movements. The device provides damping by dissipating energy under seismic, braking, or other dynamic loads.

Deck Joint—A structural discontinuity between two elements, at least one of which is a deck element. It is designed to permit relative translation and/or rotation of abutting structural elements.

Disc Bearing—A bearing that accommodates rotation by deformation of a single elastomeric disc molded from a urethane compound. It may be movable, guided, unguided, or fixed. Movement is accommodated by sliding of polished stainless steel on PFTE.

Double Cylindrical Bearing—A bearing made from two cylindrical bearings placed on top of each other with their axes at right angles to facilitate rotation about any horizontal axis.

Fiberglass-Reinforced Pad (FGP)—A pad made from discrete layers of elastomer and woven fiberglass bonded together during vulcanization.

Fixed Bearing—A bearing that prevents differential longitudinal translation of abutting structural elements. It may or may not provide for differential lateral translation or rotation.

Integral Bridge—A bridge without deck joints.

Joint—A structural discontinuity between two elements. The structural members used to frame or form the discontinuity.

Joint Seal—A poured or preformed elastomeric device designed to prevent moisture and debris from penetrating joints.

Knuckle Bearing—A bearing in which a concave metal surface rocks on a convex metal surface to provide rotation capability about any horizontal axis.

Longitudinal—Parallel with the main span direction of a structure.

Longitudinal Joint—A joint parallel to the span direction of a structure provided to separate a deck or superstructure into two independent structural systems.

Metal Rocker or Roller Bearing—A bearing that carries vertical load by direct contact between two metal surfaces and that accommodates movement by rocking or rolling of one surface with respect to the other.

Modular Bridge Joint System (MBJS)—A sealed joint with two or more elastomeric seals held in place by edgebeams that are anchored to the structural elements (deck, abutment, etc.) and one or more transverse centerbeams that are parallel to the edgebeams. Typically used for movement ranges greater than 4.0 in.

Movable Bearing—A bearing that facilitates differential horizontal translation of abutting structural elements in a longitudinal and/or lateral direction. It may or may not provide for rotation.

Multirotational Bearing—A bearing consisting of a rotational element of the pot type, disc type, or spherical type when used as a fixed bearing and that may, in addition, have sliding surfaces to accommodate translation when used as an expansion bearing. Translation may be constrained to a specified direction by guide bars.

Neutral Point—The point about which all of the cyclic volumetric changes of a structure take place.

Open Joint—A joint designed to permit the passage of water and debris through the joint.

Plain Elastomeric Pad (PEP)—A pad made exclusively of elastomer, which provides limited translation and rotation.

Polytetrafluorethylene (PTFE)—Also known as Teflon.

Pot Bearing—A bearing that carries vertical load by compression of an elastomeric disc confined in a steel cylinder and that accommodates rotation by deformation of the disc.

Poured Seal—A seal made from a material that remains flexible (asphaltic, polymeric, or other), which is poured into the gap of a joint and is expected to adhere to the sides of the gap. Typically used only when expected total range of movement is less than 1.5 in.

PTFE Sliding Bearing—A bearing that carries vertical load through contact stresses between a PTFE sheet or woven fabric and its mating surface, and that permits movements by sliding of the PTFE over the mating surface.

Relief Joint—A deck joint, usually transverse, that is designed to minimize either unintended composite action or the effect of differential horizontal movement between a deck and its supporting structural system.

Restrainers—A system of high-strength cables or rods that transfers forces between superstructure elements and/or superstructure and substructure elements under seismic or other dynamic loads after an initial slack is taken up, while permitting thermal movements.

Root Mean Square—RMS

Rotation about the Longitudinal Axis—Rotation about an axis parallel to the main spao direction of the bridge.

Rotation about the Transverse Axis—Rotation about an axis parallel to the transverse axis of the bridge.

Sealed Joint—A joint provided with a joint seal.

Shock Transmission Unit (STU)—A device that provides a temporary rigid link between superstructure elements and/or superstructure and substructure elements under seismic, braking, or other dynamic loads, while permitting thermal movements.

Single-Support-Bar System (SSB)—A MBJS designed so that only one support bar is connected to all of the centerbeams. The centerbeam/support bar connection typically consists of a yoke through which the support bar slides.

Sliding Bearing—A bearing that accommodates movement by translation of one surface relative to another.

Steel-Reinforced Elastomeric Bearing—A bearing made from alternate laminates of steel and elastomer bonded together during vulcanization. Vertical loads are carried by compression of the elastomer. Movements parallel to the reinforcing layers and rotations are accommodated by deformation of the elastomer.

Strip Seal—A sealed joint with an extruded elastomeric seal retained by edgebeams that are anchored to the structural elements (deck, abutment, etc). Typically used for expected total movement ranges from 1.5 to 4.0 in., although single seals capable of spanning a 5.0 in. gap are also available.

Translation—Horizontal movement of the bridge in the longitudinal or transverse direction.

Transverse—The horizontal direction normal to the longitudinal axis of the bridge.

Waterproofed Joints—Open or closed joints that have been provided with some form of trough below the joint to contain and conduct deck discharge away from the structure.

Welded Multiple-Support-Bar System (WMSB)—A MBJS designed so that each support bar is welded to only one centerbeam. Although some larger WMSB systems have been built and are performing well, WMSB systems are typically impractical for more than nine seals or for movement ranges larger than 27.0 in.

14.3 NOTATION

A = plan area of elastomeric element or bearing (in.^{2}) (14.6.3.1)
A_{Wbot} = area of weld at the bottom (in.^{2}) (14.5.6.9.7b)
A_{Wmtd} = minimum cross-sectional area of weld (in.^{2}) (14.5.6.9.7b)
A_{Wtop} = area of weld at the top (in.^{2}) (14.5.6.9.7b)
a_{cr} = creep deflection divided by initial dead load deflection (14.7.5.3.3)
~~B = length of pad if rotation is about its transverse axis or width of pad if rotation is about its longitudinal axis (in.) (14.7.5.3.5)~~
c = minimum vertical clearance between rotating and nonrotating parts; design clearance between piston and pot (in.) (C14.7.3.1) (14.7.4.7)
D = diameter of the projection of the loaded surface of the bearing in the horizontal plane (in.); diameter of pad (in.) (14.7.3.2) (14.7.5.1) (14.7.5.3.5) (14.7.6.3.5b) (14.7.6.3.5d) (14.7.6.3.6)
D_d = diameter of the disc element (in.) (14.7.8.1) (14.7.8.5)
D_p = internal diameter of pot (in.) (14.7.4.3) (14.7.4.6) (14.7.4.7)
D_1 = diameter of the rocker or roller surface (in.) (14.7.1.4)
D_2 = diameter of the mating surface, positive if the curvatures have the same sign, infinite if the mating surface is flat (in.) (14.7.1.4)
d = diameter of rocker or roller (in.); the diameter of the hole or holes in the bearing (in.) (C14.7.1.4) (C14.7.5.1)
d_{cb} = depth of the centerbeam (in.) (14.5.6.9.7b)
d_{sb} = depth of the support bar (in.) (14.5.6.9.7b)
E_c = effective modulus of elastomeric bearing in compression (ksi); uniaxial compressive stiffness of the CDP bearing pad. It may be taken as 30 ksi in lieu of pad specific test data (ksi) (14.6.3.2) (14.7.6.3.3) (14.7.6.3.5c)
E_s = Young's modulus for steel (ksi) (14.7.1.4)
F_y = specified minimum yield strength of the weakest steel at the contact surface (ksi); yield strength of steel (ksi); yield strength of steel reinforcement (ksi) (14.7.1.4) (14.7.4.6) (14.7.4.7) (14.7.5.3.7)
G = shear modulus of the elastomer (ksi); shear modulus of the CDP (14.6.3.1) (C14.6.3.2) (14.7.5.2) (14.7.5.3.2) (C14.7.5.3.3) (14.7.5.3.6) (14.7.6.2) (14.7.6.3.2) (14.7.6.3.5b) (14.7.6.3.5d) (14.7.6.3.4)
H_{bu} = lateral load transmitted to the superstructure and substructure by bearings from applicable strength and extreme event load combinations in Table 3.4.1-1 (kip) (14.6.3.1)

H_s = horizontal load from applicable service load combinations in Table 3.4.1-1 (kip) (14.7.3.3)
H_u = lateral load from applicable strength and extreme event load combinations in Table 3.4.1-1 (kip) (14.7.4.7)
~~h_{max} = thickness of thickest elastomeric layer in elastomeric bearing (in.) (14.7.5.3.7)~~
h_{p1} = pot cavity depth (in.) (C14.7.4.3)
h_{p2} = vertical clearance between top of piston and top of pot wall (in.) (C14.7.4.3)
h_r = depth of elastomeric disc (in.) (14.7.4.3)
h_{ri} = thickness of *i*th elastomeric layer (in.) (14.7.5.1) (14.7.5.3.3) (14.7.5.3.5) (14.7.6.3.3) (14.7.6.3.5d) (14.7.6.3.7)
h_{rt} = total elastomer thickness (in.); smaller of total elastomer or bearing thickness (in.) (14.6.3.1) (14.6.3.2) (14.7.5.3.4) (14.7.6.3.4) (14.7.6.3.5b)
h_s = thickness of steel reinforcement (in.) (14.7.5.3.7)
h_w = height of the weld (in.); height from top of rim to underside of piston (in.) (14.5.6.9.7b) (C14.7.4.3) (14.7.4.7)
I = moment of inertia of plan shape of bearing (in.^{4}) (14.6.3.2)
K = rotational stiffness of CDP (kip-in./rad.) (C14.6.3.2)
L = projected length of the sliding surface perpendicular to the rotation axis (in.); length of a rectangular elastomeric bearing (parallel to longitudinal bridge axis) (in.); length of a CDP bearing pad in the plane of rotation (in.) (14.7.3.3) (14.7.5.1) (14.7.5.3.6) (14.7.6.3.5b) (14.7.6.3.5c) (14.7.6.3.5d) (14.7.6.3.6)
M_H = horizontal bending moment range in the centerbeam on the critical section located at the weld toe due to horizontal force range (kip-in.) (14.5.6.9.7b)
M_{OT} = overturning moment range from horizontal reaction force (kip-in.) (14.5.6.9.7b)
M_V = vertical bending moment range in the centerbeam on the critical section located at the weld toe due to the vertical force range (kip-in.); component of vertical bending moment range in the support bar due to the vertical reaction force range in the connection located on the critical section at the weld toe (kip-in.) (14.5.6.9.7b)
M_u = moment transmitted to the superstructure and substructure by bearings from applicable strength and extreme event load combinations in Table 3.4.1-1 (kip-in.) (14.6.3.2)
m = modification factor (14.8.3.1) (5.7.5)
n = number of interior layers of elastomer (14.7.5.3.5) (14.7.6.3.5d)
P_D = compressive load at the service limit state (load factor = 1.0) due to permanent loads (kip) (14.7.3.3)
P_S = total compressive load from applicable service load combinations in Table 3.4.1-1 (kip) (14.7.1.4) (14.7.3.2)
P_u = compressive force from applicable strength and extreme event load combinations in Table 3.4.1-1 (kip) (14.6.3.1)
p = allowable bearing at the service limit state (kip/in.) (C14.7.1.4)
R = radius of curved sliding surface (in.) (14.6.3.2) (14.7.3.3)
R_H = horizontal reaction force range in the connection (kip) (14.5.6.9.7b)
R_o = radial distance from center of pot to object in question (e.g., pot wall, anchor bolt, etc.) (in.) (C14.7.4.3)
R_V = vertical reaction force range in the connection (kip) (14.5.6.9.7b)
S = shape factor of the CDP pad computed based on Eq. 14.7.5.1-1 and based on total pad thickness; shape factor of an individual elastomer layer; shape factor of thickest layer of an elastomeric bearing (14.6.3.2) (C14.6.3.2) (14.7.5.3.2) (C14.7.5.3.3) (14.7.5.3.5) (14.7.5.3.6) (14.7.6.3.2) (14.7.6.3.5b) (14.7.6.3.5d)
S_i = shape factor of the *i*th layer of an elastomeric bearing (14.7.5.1)
S_{RB} = combined bending stress range in the centerbeam (ksi); bending stress range in the support bar due to maximum moment including moment from vertical reaction and overturning at the connection (ksi) (14.5.6.9.7b)
S_{RZ} = vertical stress range in the top of the centerbeam-to-support-bar weld from the concurrent reaction of the support beam (ksi); vertical stress range in the bottom of the centerbeam-to-support-bar weld from the vertical and horizontal reaction force ranges in the connection (ksi) (14.5.6.9.7b)
S_{Wbot} = section modulus of the weld at the bottom for bending in the direction of the support bar axis (in.^{3}) (14.5.6.9.7b)
S_{Wmid} = section modulus of the weld at the most narrow cross-section for bending in the direction normal to the centerbeam axis (in.^{3}) (14.5.6.9.7b)
S_{Wtop} = section modulus of the weld at the top for bending in the direction normal to the centerbeam axis (in.^{3}) (14.5.6.9.7b)
S_{Xcb} = vertical section modulus to the bottom of the centerbeam (in.^{3}) (14.5.6.9.7b)
S_{Xsb} = vertical section modulus of the support bar to the top of the support bar (in.^{3}) (14.5.6.9.7b)
S_{Ycb} = horizontal section modulus of the centerbeam (in.^{3}) (14.5.6.9.7b)
t_b = pot base thickness (in.) (14.7.4.6) (14.7.4.7)
t_p = total thickness of CDP pad (in.) (14.6.3.2) (14.7.6.3.5c)
t_w = pot wall thickness (in.) (14.7.4.6) (14.7.4.7)

W = roadway surface gap in a transverse deck joint, measured in the direction of travel at the extreme movement determined using the appropriate strength load combination specified in Table 3.4.1-1 (in.); width of the bearing (in.); length of cylinder (in.); length of the cylindrical surface (in.); width of the bearing in the transverse direction (in.) (14.5.3.2) (14.7.1.4) (14.7.3.2) (14.7.3.3) (14.7.5.1) (14.7.5.3.6) (14.7.6.3.5b) (14.7.6.3.5d) (14.7.6.3.6)

w = height of piston rim (in.) (14.7.4.7)

β = angle between the vertical and resultant applied load (rad.) (14.7.3.3)

ΔF_{TH} = constant amplitude fatigue threshold taken from Table 6.6.1.2.5-3 for the detail category of interest (ksi); constant amplitude fatigue threshold for Category A as specified in Article 6.6 (14.5.6.9.7a) (14.7.5.3.7)

Δf = force effect, design live load stress range due to the simultaneous application of vertical and horizontal axle loads specified in Article14.5.6.9.4 and distributed as specified in Article 14.5.6.9.5, and calculated as specified in Article 14.5.6.9.7b (ksi) (14.5.6.9.7a) (14.5.6.9.7b)

Δ_O = maximum horizontal displacement of the bridge superstructure at the service limit state (in.) (14.7.5.3.4)

Δ_S = maximum total shear deformation of the elastomer from applicable service load combinations in Table 3.4.1-1 (in.); maximum total shear deformation of the bearing from applicable service load combinations in Table 3.4.1-1 (in.) (14.7.5.3.4) (14.7.6.3.4)

Δ_T = design thermal movement range computed in accordance with Article 3.12.2 (in.) (14.7.5.3.4)

Δ_u = shear deformation from applicable strength and extreme event load combinations in Table 3.4.1-1 (in.) (14.6.3.1)

δ = instantaneous compressive deflection (in.) (14.7.5.3.3)

δ_d = initial dead load compressive deflection (in.) (14.7.5.3.3)

δ_L = instantaneous live load compressive deflection (in.) (14.7.5.3.3)

δ_{ld} = long term dead load compressive deflection of bearing (in.) (14.7.5.3.3)

δ_u = vertical deflection from applicable strength load combinations in Table 3.4.1-1 (in.) (C14.7.4.3)

ε = compressive strain in an elastomer layer (C14.7.5.3.3)

ε_s = maximum uniaxial strain due to compression under total load from applicable service load combinations in Table 3.4.1-1 (14.7.6.3.5c)

ε_{di} = initial dead load compressive strain in ith elastomer layer (14.7.5.3.3)

ε_{Li} = instantaneous live load compressive strain in ith elastomer layer (14.7.5.3.3)

ε_L = average compressive strain due to total load from applicable service load combinations in Table 3.4.1-1 (14.7.6.3.3)

ε_L = maximum uniaxial strain due to combined compression and rotation from applicable service load combinations in Table 3.4.1-1 (14.7.6.3.5c)

δ_u = compressive deflection of bearing due to factored loads (in.) (C14.7.4.3)

ε_i = instantaneous compressive strain in ith elastomer layer of a laminated bearing (14.7.5.3.3)

θ_L = maximum rotation of the CDP pad at the service limit state (load factor = 1.0) due to live load (rad.) (14.7.6.3.5c)

θ_s = maximum service limit state rotation due to total load for bearings unlikely to experience hard contact between metal components (rad.); maximum service limit state design rotation angle specified in Article 14.4.2.1 (rad.); maximum rotation of the CDP pad from applicable service load combinations in Table 3.4.1-1 (rad.); maximum service limit state design rotation angle about any axis of the pad specified in Article 14.4.2.1 (rad.) (C14.4.2) (14.4.2.1) (14.6.3.2) (14.7.5.3.5) (14.7.6.3.5b) (14.7.6.3.5c) (14.7.6.3.5d)

$\theta_{s,x}$ = maximum service limit state design rotation angle specified in Article 14.4.2.1 about transverse axis (rad.) (14.7.6.3.5b) (14.7.6.3.5d)

$\theta_{s,z}$ = maximum service limit state design rotation angle specified in Article 14.4.2.1 about longitudinal axis (rad.) (14.7.6.3.5b) (14.7.6.3.5d)

θ_u = maximum strength limit state rotation for bearings that may experience hard contact between metal components (rad.); maximum strength limit state rotation for bearings which are less likely to experience hard contact between metal components (rad.); design rotation from applicable strength load combinations in Table 3.4.1-1 or Article 14.4.2.2.1 (rad.); maximum strength limit state design rotation angle specified in Article 14.4.2.2.1 (rad.); maximum strength limit state design rotation angle specified in Article 14.4.2.2.2 (rad.) (C14.4.2) (14.4.2.2.1) (14.4.2.2.2) (C14.7.3.1) (14.7.3.3) (14.7.4.3) (14.7.4.7) (14.7.8.1)

μ = coefficient of friction; coefficient of friction of the PTFE slider (14.6.3.1) (C14.7.8.4)

σ = instantaneous live load compressive stress or dead load compressive stress in an individual elastomer layer (ksi) (C14.7.5.3.3)

σ_L = average compressive stress at the service limit state (load factor = 1.0) due to live load (ksi) (14.7.5.3.2) (14.7.5.3.7) (14.7.6.3.2)

σ_s = average compressive stress due to total load from applicable service load combinations in Table 3.4.1-1 (ksi); average compressive stress due to total load associated with the maximum rotation from applicable service load combinations in Table 3.4.1-1 (ksi) (14.6.3.2) (14.7.4.6) (14.7.5.3.2) (14.7.5.3.5) (14.7.5.3.6) (14.7.5.3.7) (14.7.6.3.2) (14.7.6.3.3) (14.7.6.3.4) (14.7.6.3.5b) (14.7.6.3.5c) (14.7.6.3.5d)

σ_{SS} = maximum average contact stress at the service limit state permitted on PTFE by Table 14.7.2.4-1 or on bronze by Table 14.7.7.3-1 (ksi) (14.7.3.2) (14.7.3.3)

ϕ = resistance factor (14.6.1) (14.7.3.2) (C14.7.4.7)

$\phi_{tension}$ = resistance factor for tension for anchors governed by the steel (14.5.6.9.6)

ϕ_{shear} = resistance factor for shear for anchors governed by the steel (14.5.6.9.6)

$\phi_{A\ tension}$ = resistance factor for tension for anchors governed by the concrete, Condition A, supplemental reinforcement in the failure area (14.5.6.9.6)

$\phi_{A\ shear}$ = resistance factor for shear for anchors governed by the concrete, Condition A, supplemental reinforcement in the failure area (14.5.6.9.6)

$\phi_{B\ tension}$ = resistance factor for tension for anchors governed by the concrete, Condition B, no supplemental reinforcement in the failure area (14.5.6.9.6)

$\phi_{B\ shear}$ = resistance factor for shear for anchors governed by the concrete, Condition B, no supplemental reinforcement in the failure area (14.5.6.9.6)

Ψ = subtended semiangle of the curved surface (rad.) (14.7.3.3)

14.3 NOTATION

a_{cr} = creep deflection divided by initial dead load deflection **(14.7.5.3.6)** ~~(14.7.5.3.3)~~

~~B = length of pad if rotation is about its transverse axis or width of pad if rotation is about its longitudinal axis (in.) (14.7.5.3.5)~~

B_a = dimensionless coefficient used to determine peak hydrostatic stress (14.7.5.3.3)

C_σ = parameter used to determine hydrostatic stress (14.7.5.3.3)

D = diameter of the projection of the loaded surface of the bearing in the horizontal plane (in.); diameter of pad (in.)**; diameter of the bearing (in.)** (14.7.3.2) (14.7.5.1) ~~(14.7.5.3.5)~~ (14.7.6.3.5b) (14.7.6.3.5d) (14.7.6.3.6) **(14.7.5.3.3) (14.7.5.3.4)**

D_a = dimensionless coefficient used to determine shear strain due to axial load (14.7.5.3.3)

D_r = dimensionless coefficient used to determine shear strain due to rotation (14.7.5.3.3)

d_{a1} = dimensionless coefficient used to determine shear strain due to axial load (C14.7.5.3.3)

d_{a2} = dimensionless coefficient used to determine shear strain due to axial load (C14.7.5.3.3)

d_{a3} = dimensionless coefficient used to determine shear strain due to axial load (C14.7.5.3.3)

F_y = specified minimum yield strength of the weakest steel at the contact surface (ksi); yield strength of steel (ksi); yield strength of steel reinforcement (ksi) (14.7.1.4) (14.7.4.6) (14.7.4.7) **(14.7.5.3.5)** ~~(14.7.5.3.7)~~

G = shear modulus of the elastomer (ksi); shear modulus of the CDP (14.6.3.1) (C14.6.3.2) (14.7.5.2) ~~(14.7.5.3.2)~~ (~~C~~14.7.5.3.3) **(14.7.5.3.4) (C14.7.5.3.6)** ~~(14.7.5.3.6)~~ (14.7.6.2) (14.7.6.3.2) (14.7.6.3.5b) (14.7.6.3.5d) (14.7.6.3.4)

~~h_{max} = thickness of thickest elastomeric layer in elastomeric bearing (in.) (14.7.5.3.7)~~

h_{ri} = thickness of ith elastomeric layer (in.); **thickness of ith internal elastomeric layer (in.); layer thickness for FGP which equals the greatest distance between midpoints of two double fiberglass reinforcement layers (in.); thickness of a PEP (in.); mean thickness of two layers of elastomer bonded to the same reinforcement for FGP when the two layers are of different thicknesses (in.)** (14.7.5.1) ~~(14.7.5.3.3)~~ ~~(14.7.5.3.5)~~ **(14.7.5.3.6)** ~~(14.7.6.3.3)~~ ~~(14.7.6.3.5d)~~ ~~(14.7.6.3.7)~~ **(14.7.5.3.3) (14.7.5.3.5) (14.7.6.3.3) (14.7.6.3.5d) (14.7.6.3.7) (14.7.6.3.2) (14.7.6.3.5d) (14.7.6.3.3) (14.7.6.3.7)**

h_{rt} = total elastomer thickness (in.); smaller of total elastomer or bearing thickness (in.) (14.6.3.1) (14.6.3.2) **(14.7.5.3.2) (14.7.5.3.3)** (14.7.5.3.4) (14.7.6.3.5b) (14.7.6.3.4)

h_s = thickness of steel reinforcement (in.) **(14.7.5.3.5)** ~~(14.7.5.3.7)~~

K = rotational stiffness of CDP (kip-in./rad.)**; bulk modulus (ksi)** (C14.6.3.2) **(C14.7.5.3.3)**

L = projected length of the sliding surface perpendicular to the rotation axis (in.); **plan dimension of the bearing perpendicular to the axis of rotation under consideration** ~~length of a rectangular elastomeric bearing~~ **(generally** parallel to **the global** longitudinal bridge axis) (in.); length of a CDP bearing pad in the plane of rotation (in.) (14.7.3.3) (14.7.5.1) **(14.7.5.3.3) (14.7.5.3.4)** ~~(14.7.5.3.6)~~ (14.7.6.3.5b) (14.7.6.3.5d) (14.7.6.3.6) (14.7.6.3.5c)

n = number of interior layers of elastomer **(14.7.5.3.3) (14.7.5.4) (14.7.6.1)** ~~(14.7.5.3.5)~~ (14.7.6.3.5d)

S = shape factor of the CDP pad computed based on Eq. 14.7.5.1-1 and based on total pad thickness; shape factor of an individual elastomer layer; **shape factor of PEP** ~~shape factor of thickest layer of an elastomeric bearing~~ (14.6.3.2) (C14.6.3.2) **(C14.7.5.3.6)** ~~(C14.7.5.3.3)~~ ~~(14.7.5.3.2)~~ ~~(14.7.5.3.5)~~ ~~(14.7.5.3.6)~~ ~~(14.7.6.3.2)~~ (14.7.6.3.5b) ~~(14.7.6.3.5d)~~

S_i = shape factor of the ~~i~~ **i^{th}** layer of an elastomeric bearing; **shape factor of the ith internal layer of an elastomeric bearing; shape factor for FGP based upon an h_{ri} layer thickness which equals the greatest distance between midpoints of two double fiberglass reinforcement layers** (14.7.5.1) **(14.7.5.3.3) (14.7.5.3.4) (14.7.5.4) (14.7.6.1) (14.7.6.3.2) (14.7.6.3.5d)**

W = roadway surface gap in a transverse deck joint, measured in the direction of travel at the extreme movement determined using the appropriate strength load combination specified in Table 3.4.1-1 (in.); width of the bearing (in.); length of cylinder (in.); length of the cylindrical surface (in.); **plan dimension of the bearing parallel to the axis of rotation under consideration** ~~width of the bearing in the transverse direction~~ **(generally parallel to the global transverse bridge axis)** (in.) (14.5.3.2) (14.7.1.4) (14.7.3.2) (14.7.3.3) (14.7.5.1) **(C14.7.5.3.3) (14.7.5.3.4)** ~~(14.7.5.3.6)~~ (14.7.6.3.5b) (14.7.6.3.5d) (14.7.6.3.6)

α = parameter used to determine hydrostatic stress (1/rad.) (14.7.5.3.3)

γ_a = shear strain caused by axial load (14.7.5.3.3)

$\gamma_{a,cy}$ = shear strain caused by cyclic axial load (14.7.5.3.3)

$\gamma_{a,st}$ = shear strain caused by static axial load (14.7.5.3.3)

γ_r = shear strain caused by rotation (14.7.5.3.3)

$\gamma_{r,cy}$ = **shear strain caused by rotation from cyclic loads (14.7.5.3.3)**

$\gamma_{r,st}$ = **shear strain caused by rotation from static loads (14.7.5.3.3)**

γ_s = **shear strain caused by shear displacement (14.7.5.3.3)**

$\gamma_{s,cy}$ = **shear strain caused by shear displacement from cyclic loads (14.7.5.3.3)**

$\gamma_{s,st}$ = **shear strain caused by shear displacement from static loads (14.7.5.3.3)**

ΔF_{TH} = constant amplitude fatigue threshold taken from Table 6.6.1.2.5-3 for the detail category of interest (ksi); constant amplitude fatigue threshold for Category A as specified in Article 6.6 (14.5.6.9.7a) **(14.7.5.3.5)** ~~(14.7.5.3.7)~~

Δ_O = maximum horizontal displacement of the bridge superstructure at the service limit state (in.) ~~(14.7.5.3.4)~~ **(14.7.5.3.2)**

Δ_S = maximum total shear deformation of the elastomer from applicable service load combinations in Table 3.4.1-1 (in.); maximum total shear deformation of the bearing from applicable service load combinations in Table 3.4.1-1 (in.)**: maximum total static or cyclic shear deformation of the elastomer from applicable service load combinations in Table 3.4.1-1 (in.) (14.7.5.3.2)** ~~(14.7.5.3.4)~~ (14.7.6.3.4) **(14.7.5.3.3)**

Δ_T = design thermal movement range computed in accordance with Article 3.12.2 (in.) **(14.7.5.3.2)** ~~(14.7.5.3.4)~~

δ_d = initial dead load compressive deflection (in.) **(14.7.5.3.6)** ~~(14.7.5.3.3)~~

δ_L = instantaneous live load compressive deflection (in.) **(14.7.5.3.6)** ~~(14.7.5.3.3)~~

δ_{ll} = long term dead load compressive deflection (in.) **(14.7.5.3.6)** ~~(14.7.5.3.3)~~

ε = compressive strain in an elastomer layer **(C14.7.5.3.6)** ~~(C14.7.5.3.3)~~

ε_a = **total of static and cyclic average axial strain taken as positive for compression in which the cyclic component is multiplied by 1.75 from applicable service load combinations in Table 3.4.1-1 (ksi)** (14.7.5.3.3) (14.7.5.4)

ε_{di} = initial dead load compressive strain in i^{th} elastomer layer **(14.7.5.3.6)** ~~(14.7.5.3.3)~~

ε_{Li} = instantaneous live load compressive strain in i^{th} elastomer layer **(14.7.5.3.6)** ~~(14.7.5.3.3)~~

θ_s = maximum service limit state rotation due to total load for bearings unlikely to experience hard contact between metal components (rad.); maximum service limit state design rotation angle specified in Article 14.4.2.1 (rad.); maximum rotation of the CDP pad from applicable service load combinations in Table 3.4.1-1 (rad.); maximum service limit state design rotation angle about any axis of the pad specified in Article 14.4.2.1 (rad.)**; maximum static or cyclic service limit state design rotation angle of the elastomer specified in Article 14.4.2.1 (rad.); total of static and cyclic maximum service limit state design rotation angles of the elastomer specified in Article 14.4.2.1 in which the cyclic component is multiplied by 1.75 (rad.)** (C14.4.2) (14.4.2.1) (14.6.3.2) ~~(14.7.5.3.5)~~ (14.7.6.3.5c) (14.7.6.3.5b) (14.7.6.3.5d) **(14.7.5.3.3) (14.7.5.4)**

$\theta_{s,x}$ = maximum service limit state design rotation angle specified in Article 14.4.2.1 about transverse axis **(generally parallel to the global transverse bridge axis)** (rad.) (14.7.6.3.5b) (14.7.6.3.5d)

$\theta_{s,z}$ = maximum service limit state design rotation angle specified in Article 14.4.2.1 about longitudinal axis **(generally parallel to the global longitudinal bridge axis)** (rad.) (14.7.6.3.5b) (14.7.6.3.5d)

λ = **compressibility index (C14.7.5.3.3)**

σ = instantaneous live load compressive stress or dead load compressive stress in an individual elastomer layer (ksi) **(C14.7.5.3.6)** ~~(C14.7.5.3.3)~~

σ_{hyd} = **peak hydrostatic stress (ksi) (14.7.5.3.3)**

σ_L = average compressive stress at the service limit state (load factor = 1.0) due to live load (ksi) ~~(14.7.5.3.2)~~ **(14.7.5.3.5)** ~~(14.7.5.3.7)~~ (14.7.6.3.2)

σ_s = average compressive stress due to total load from applicable service load combinations in Table 3.4.1-1 (ksi); average compressive stress due to total load associated with the maximum rotation from applicable service load combinations in Table 3.4.1-1 (ksi)**; average compressive stress due to total static or cyclic load from applicable service load combinations in Table 3.4.1-1 (ksi); total of static and cyclic average compressive stress in which the cyclic component is multiplied by 1.75 from applicable service load combinations in Table 3.4.1-1 (ksi)** (14.7.4.6) ~~(14.7.5.3.2)~~ **(14.7.5.3.4) (14.7.5.3.5)** ~~(14.7.5.3.6)~~ ~~(14.7.5.3.7)~~ (14.7.6.3.2) (14.7.6.3.3) (14.7.6.3.4) (14.6.3.2) ~~(14.7.5.3.5)~~ (14.7.6.3.5b) (14.7.6.3.5c) (14.7.6.3.5d) **(14.7.5.3.3)**

This page is intentionally left blank.

14.4 MOVEMENTS AND LOADS

14.4.1 General

The selection and layout of the joints and bearings shall allow for deformations due to temperature and other time-dependent causes and shall be consistent with the proper functioning of the bridge.

Deck joints and bearings shall be designed to resist loads and accommodate movements at the service and strength limit states and to satisfy the requirements of the fatigue and fracture limit state. The loads induced on the joints, bearings, and structural members depend on the stiffness of the individual elements and the tolerances achieved during fabrication and erection. These influences shall be taken into account when calculating design loads for the elements. No damage due to joint or bearing movement shall be permitted at the service limit state, and no irreparable damage shall occur at the strength limit state. At the extreme event limit state, bearings which are designed to act as fuses or sustain irreparable damage may be permitted by the owner provided loss of span is prevented.

Translational and rotational movements of the bridge shall be considered in the design of MBJS and bearings. The sequence of construction shall be considered, and all critical combinations of load and movement shall be considered in the design. Rotations about two horizontal axes and the vertical axis shall be considered. The movements shall include those caused by the loads, deformations, and displacements caused by creep, shrinkage and thermal effects, and inaccuracies in installation. In all cases, both instantaneous and long-term effects shall be considered. The influence of dynamic load allowance shall be included for MBJS, but need not be included for bearings. The most adverse combination shall be tabulated for the bearings in a rational form such as shown in Figure C1.

For determining force effects in joints, bearings, and adjacent structural elements, the influence of their stiffnesses and the expected tolerances achieved during fabrication and erection shall be considered.

The three-dimensional effects of translational and rotational movements of the bridge shall be considered in the design of MBJS and bearings.

Both instantaneous and long-term effects shall be considered in the design of joints and bearings.

The effects of curvature, skew, rotations, and support restraint shall be recognized in the analysis.

The forces resulting from transverse or longitudinal prestressing of the concrete deck or steel girders shall be considered in the design of the bearings.

C14.4.1

The joints and bearings should allow movements due to temperature changes, creep and shrinkage, elastic shortening due to prestressing, traffic loading, construction tolerances or other effects. If these movements are restrained, large horizontal forces may result. If the bridge deck is cast-in-place **or precast** concrete, the bearings at a single support should permit transverse expansion and contraction. Externally applied transverse loads such as wind, earthquake, or traffic braking forces may be carried either on a small number of bearings near the centerline of the bridge or by an independent guide system. The latter is likely to be needed if the horizontal forces are large and fusing or irreparable damage is not permitted.

See Article C14.6.5.3 for discussion concerning bearings which are designed to act as fuses at the extreme event limit state.

Distribution of vertical load among bearings may adversely affect individual bearings. This is particularly critical when the girders are stiff in bending and torsion and bearings are stiff in compression, and the construction method does not allow minor misalignments to be corrected.

Bridge movements arise from a number of different causes. Simplified estimates of bridge movements, particularly on bridges with complex geometry, may lead to improper estimation of the direction of motion and, as a result, an improper selection of the bearing or joint system. Curved and skewed bridges have transverse as well as longitudinal movement due to temperature effects and creep or shrinkage. Transverse movement of the superstructure relative to the substructure may become significant for very wide bridges. Relatively wide curved and skewed bridges often undergo significant diagonal thermal movement, which introduces large transverse movements or large transverse forces if the bridge is restrained against such movements. Rotations caused by permissible levels of misalignment during installation should also be considered, and in many cases they will be larger than the live load rotations.

The neutral axis of a girder that acts compositely with its bridge deck is typically close to the underside of the deck. As a result, the neutral axis of the beam and the center of rotation of the bearing seldom coincide. Under these conditions, end rotation of the girder induces either horizontal movements or forces at the bottom flange or bearing level. The location of bearings off the neutral axes of the girders can **also** create horizontal forces due to elastic shortening of the girders when subjected to vertical loads **at continuous supports**.

The failure of bridge bearings or joint seals may ultimately lead to deterioration or damage to the bridge.

Each bearing and MBJS should be clearly identified

in design documents, and all requirements should be identified. One possible format for this information is shown in Figure C1 for limit states other than extreme event.

When integral piers or abutments are used, the substructure and superstructure are connected such that additional restraints against superstructure rotation are introduced.

In curved bridges, thermal stresses are minimized when bearings are oriented such that they permit free translation along rays from a single point. With bearings arranged to permit such movement along these rays, there will be no thermal forces generated when the superstructure temperature changes uniformly. Any other orientation of the bearings will induce thermal forces into the superstructure and substructure. However, other considerations often make impractical the orientation along rays from a single point.

Prestressing of the deck causes changes in the vertical reactions due to the eccentricity of the forces, which creates restoring forces. Effects of creep and shrinkage also should be considered.

Bridge name or ref.					
Bearing identification mark					
Number of bearings required					
Seating material	**Upper surface**				
	Lower surface				
Permitted average contact pressure (psi)	**Service limit state**		**Upper face**		
			Lower face		
Design load effects (kip)	**Service limit state**		**Vertical**	**max.**	
				perm.	
				min.	
			Transverse		
			Longitudinal		
	Strength limit state		**Vertical**		
			Transverse		
			Longitudinal		
Translation	**Service limit state**	**Irreversible**	**Transverse**		
			Longitudinal		
		Reversible	**Transverse**		
			Longitudinal		
	Strength limit state	**Irreversible**	**Transverse**		
			Longitudinal		
		Reversible	**Transverse**		
			Longitudinal		
Rotation (rad.)	**Service limit**	**Irreversible**	**Transverse**		
			Longitudinal		

	state	Reversible	Transverse	
			Longitudinal	
	Strength limit state	Irreversible	Transverse	
			Longitudinal	
		Reversible	Transverse	
			Longitudinal	
Maximum bearing dimensions (in.)	Upper surface		Transverse	
			Longitudinal	
	Lower surface		Transverse	
			Longitudinal	
	Overall height			
Tolerable movement of bearing under transient loads (in.)			Vertical	
			Transverse	
			Longitudinal	
Permitted resistance to translation under strength or service limit state as applicable (kip)			Transverse	
			Longitudinal	
Permitted resistance to rotation under strength or service limit state as applicable (kip/ft.)			Transverse	
			Longitudinal	
Type of attachment to structure and substructure			Transverse	
			Longitudinal	

Figure C14.4.1-1 Typical Bridge Bearing Schedule.

14.4.2 Design Requirements

The minimum thermal movements shall be computed from the extreme temperature specified in Article 3.12.2 and the estimated setting temperatures. Design loads shall be based on the load combinations and load factors specified in Section 3.

C14.4.2

Rotations are considered at the service and strength limit states as appropriate for different types of bearings. Bearings must accommodate movements in addition to supporting loads, so displacements, and in particular rotations, are needed for design. Live load rotations are typically less than 0.005 rad., but the total rotation due to fabrication and setting tolerances for seats, bearings, and girders may be significantly larger than this. Therefore, the total design rotation is found by summing rotations due to dead and live load and adding allowances for profile grade effects and the tolerances described above. Article 14.8.2 specifies when a tapered plate shall be used if the rotation due to permanent load at the service limit state (load factor = 1.0) becomes excessive. An owner may reduce the fabrication and setting tolerance allowances if justified by a suitable quality control plan; therefore, these tolerance limits are stated as recommendations rather than absolute limits.

Failure of deformable components such as elastomeric bearings is generally governed by a gradual deterioration under many cycles of load rather than sudden failure under a single load application. Further, the design limits for elastomeric bearings were originally developed under ASD service load conditions rather than the strength limit state loads considered during development of the high load multirotational bearing systems. ~~As a result, such bearings are permitted temporary overstress during construction. If this was not so, temporary local uplift caused by light load and a large rotation might unreasonably govern the design.~~ Unless smaller tolerances can be justified, θ_s for elastomeric components is the service limit state rotation plus 0.005 rad.

Metal or concrete components are susceptible to damage under a single rotation that causes metal-to-metal contact, and so they must be designed using the strength limit state rotations. Unless smaller tolerances can be justified, θ_u is the strength limit state rotation plus 0.01 rad.

Disc bearings are less likely to experience metal-to-metal contact than other High Load Multirotational (HLMR) bearings because the load element is unconfined. As a result, the total allowance for rotation is consequently smaller for a disc bearing than other HLMR bearings; however, the proof load test, as specified in the *AASHTO LRFD Bridge Construction Specifications*, assures against metal-to-metal contact.

14.4.2.1 Elastomeric Pads and Steel Reinforced Elastomeric Bearings

The maximum service limit state rotations due to total load, θ_s, for bearings unlikely to experience hard contract between metal components shall be taken as the sum of:

- The rotations from applicable service load combinations in Table 3.4.1-1, and
- An allowance for uncertainties, which shall be taken as 0.005 rad. unless an approved quality control plan justifies a smaller value.

The static and cyclic components of θ_s shall be considered separately when design is according to Article 14.7.5.3.3.

14.4.2.2 High Load Multirotational (HLMR) Bearings

14.4.2.2.1 Pot Bearings and Curved Sliding Surface Bearings

The maximum strength limit state rotation, θ_u, for bearings such as pot bearings and curved sliding surfaces that may potentially experience hard contact between metal components shall be taken as the sum of:

- The rotations from applicable strength load combinations in Table 3.4.1-1;
- The maximum rotation caused by fabrication and installation tolerances, which shall be taken as 0.005 rad. unless an approved quality control plan justifies a smaller value; and
- An allowance for uncertainties, which shall be taken as 0.005 rad. unless an approved quality control plan justifies a smaller value.

14.4.2.2.2 Disc Bearings

The maximum strength limit state rotation, θ_u, for disc bearings which are less likely to experience hard contact between metal components due to their unconfined load element, shall be taken as the sum of:

- The rotations from applicable strength load combinations in Table 3.4.1-1, and
- An allowance for uncertainties, which shall be taken as 0.005 rad. unless an approved quality control plan justifies a smaller value.

14.5 BRIDGE JOINTS

14.5.1 Requirements

14.5.1.1 General

Deck joints shall consist of components arranged to accommodate the translation and rotation of the structure at the joint.

The type of joints and surface gaps shall accommodate the movement of motorcycles, bicycles, and pedestrians, as required, and shall neither significantly impair the riding characteristics of the roadway nor cause damage to vehicles.

The joints shall be detailed to prevent damage to the structure from water, deicing chemicals, and roadway debris.

Longitudinal deck joints shall be provided only where necessary to modify the effects of differential lateral and/or vertical movement between the superstructure and substructure.

Joints and joint anchors for grid and timber decks and orthotropic deck superstructures require special details.

C14.5.1.1

To accommodate differential lateral movement, elastomeric bearings or combination bearings with the capacity for lateral movement should be used instead of longitudinal joints where practical.

14.5.1.2 Structural Design

Joints and their supports shall be designed to withstand force effects for the appropriate design limit state or states over the range of movements for the appropriate design limit state or states, as specified in Section 3. Resistance factors and modifiers shall be taken as specified in Sections 1, 5, 6, 7, and 8, as appropriate.

In snow regions, joint armor, armor connections, and anchors shall be designed to resist force effects that may be imposed on the joints by snagging snowplow blades. The edgebeams and anchorages of strip seals and MBJS with a skew exceeding 20° in snow regions that do not incorporate protection methods such as those discussed in Article 14.5.3.3 shall be designed for the strength limit state with a minimum snowplow load acting as a horizontal line load on the top surface of the edgebeam in a direction perpendicular to the edgebeam of 0.12 kips/in. for a total length of 10.0 ft. anywhere along the edgebeam in either direction. This load includes dynamic load allowance.

The following factors shall be considered in determining force effects and movements:

- Properties of materials in the structure, including coefficient of thermal expansion, modulus of elasticity, and Poisson's ratio;
- Effects of temperature, creep, and shrinkage;
- Sizes of structural components;
- Construction tolerances;
- Method and sequence of construction;

C14.5.1.2

The strength limit state for the edgebeams of strip seals and MBJS and anchorage to the concrete or other elements should be checked with this snowplow load if the skew of the joint exceeds 20° relative to a line transverse to the traveling direction. For smaller skews, the blades, which are skewed, will not strike an edgebeam all at once. Protection methods such as those discussed in Article 14.5.3.3 may eliminate the need to design for this snowplow load.

Snowplow blade angles vary regionally. Unless protection methods such as those discussed in Article 14.5.3.3 are used, agencies should avoid MBJS installations with skew that is within 3° of the plow angle used in that region, to avoid having the plow drop into the gap between centerbeams.

The snowplow load was estimated from snowplow manufacturer information as the force required to deflect a spring-activated blade with 2.0 in. of compression and 10° of deflection. The snowplow load includes the effect of impact so the dynamic load allowance should not be applied. The snowplow load should be multiplied by the appropriate strength limit state load factor for live load.

Superstructure movements include those due to placement of bridge decks, volumetric changes, such as shrinkage, temperature, moisture and creep, passage of vehicular and pedestrian traffic, pressure of wind, and the action of earthquakes. Substructure movements include differential settlement of piers and abutments, tilting, flexure, and horizontal translation of wall-type abutments respondiog to the placement of backfill as well as shifting of stub abutments due to the consolidation of embankments and in-situ soils.

- Skew and curvature;
- Resistance of the joints to movements;
- Approach pavement growth;
- Substructure movements due to embankment construction;
- Foundation movements associated with the consolidation and stabilization of subsoils;
- Structural restraints; and
- Static and dynamic structural responses and their interaction.

The length of superstructure affecting the movement at one of its joints shall be the length from the joint being considered to the structure's neutral point.

For a curved superstructure that is laterally unrestrained by guided bearings, the direction of longitudinal movement at a bearing joint may be assumed to be parallel to the chord of the deck centerline taken from the joint to the neutral point of the structure.

The potential for unaligned longitudinal and rotational movement of the superstructure at a joint should be considered in designing the vertical joints in curbs and raised barriers and in determining the appropriate position and orientation of closure or bridging plates.

Any horizontal movement of a bridge superstructure will be opposed by the resistance of bridge bearings to movement and the rigidity or flexural resistance of substructure elements. The rolling resistance of rocker and rollers, the shear resistance of elastomeric bearings, or the frictional resistance of bearing sliding surfaces will oppose movement. In addition, the rigidity of abutments and the relative flexibility of piers of various heights and foundation types will affect the magnitude of bearing movement and the bearing forces opposing movement.

Rigid approach pavements composed of cobblestone, brick, or jointed concrete will experience growth or substantial longitudinal pressure due to restrained growth. To protect bridge structures from these potentially destructive pressures and to preserve the movement range of deck joints and the performance of joint seals, either effective pavement pressure relief joints or pavement anchors should be provided in approach pavements, as described in *Transportation Research Record 1113*.

When horizontal movement at the ends of a superstructure are due to volumetric changes, the forces generated within the structure in resistance to these changes are balanced. The neutral point can be located by estimating these forces, taking into account the relative resistance of bearings and substructures to movement. The length of superstructure contributing to movement at a particular joint can then be determined.

14.5.1.3 Geometry

The moving surfaces of the joint shall be designed to work in concert with the bearings to avoid binding the joints and adversely affecting force effects imposed on bearings.

C14.5.1.3

For square or slightly skewed bridge layouts, moderate roadway grades at the joint and minimum changes in both horizontal and vertical joint alignment may be preferred in order to simplify the movements of joints and to enhance the performance of the structure.

14.5.1.4 Materials

The materials shall be selected so as to ensure that they are elastically, thermally, and chemically compatible. Where substantial differences exist, material interfaces shall be formulated to provide fully functional systems.

Materials, other than elastomers, should have a service life of not less than 75 years. Elastomers for joint seals and troughs should provide a service life not less than 25 years.

Joints exposed to traffic should have a skid-resistant surface treatment, and all parts shall be resistant to attrition and vehicular impact.

Except for high-strength bolts, fasteners for joints exposed to deicing chemicals shall be made of stainless steel.

C14.5.1.4

Preference should be given to those materials that are least sensitive to field compounding and installation variables and to those that can be repaired and altered by nonspecialized maintenance forces. Preference should also be given to those components and devices that will likely be available when replacements are needed.

14.5.1.5 Maintenance

Deck joints shall be designed to operate with a minimum of maintenance for the design life of the bridge.

Detailing should permit access to the joints from below the deck and provide sufficient area for maintenance.

Mechanical and elastomeric components of the joint shall be replaceable.

Joints shall be designed to facilitate vertical extension to accommodate roadway overlays.

C14.5.1.5

The position of bearings, structural components, joints and abutment backwalls, and the configuration of pier tops should be chosen so as to provide sufficient space and convenient access to joints from below the deck. Inspection hatches, ladders, platforms, and/or catwalks shall be provided for the deck joints of large bridges not directly accessible from the ground.

14.5.2 Selection

14.5.2.1 Number of Joints

The number of movable deck joints in a structure should be minimized. Preference shall be given to continuous deck systems and superstructures and, where appropriate, integral bridges.

The need for a fully functional cycle-control joint shall be investigated on approaches of integral bridges.

Movable joints may be provided at abutments of single-span structures exposed to appreciable differential settlement. Intermediate deck joints should be considered for multiple-span bridges where differential settlement would result in significant overstresses.

C14.5.2.1

Integral bridges, bridges without movable deck joints, should be considered where the length of superstructure and flexibility of substructures are such that secondary stresses due to restrained movement are controlled within tolerable limits.

Where a floorbeam design that can tolerate differential longitudinal movements resulting from relative temperature and live load response of the deck and independent supporting members, such as girders and trusses, is not practical, relief joints in the deck slab, movable joints in the stringers, and movable bearings between the stringers and floorbeams should be used.

Long-span deck-type structures with steel stringers that are slightly skewed, continuous, and composite can withstand substantial differential settlement without significant secondary stresses. Consequently, intermediate deck joints are rarely necessary for multiple-span bridges supported by secure foundations, i.e., piles, bedrock, dense subsoils, etc. Because the stresses induced by settlement can alter the point of inflection, a more conservative control of fatigue-prone detail locations is appropriate.

Guidance on the movements of the substructure can be found in Articles 10.5.2, 10.6.2, 10.7.2, and 10.8.2.

14.5.2.2 Location of Joints

Deck joints should be avoided over roadways, railroads, sidewalks, other public areas, and at the low point of sag vertical curves.

Deck joints should be positioned with respect to abutment backwalls and wingwalls to prevent the discharge of deck drainage that accumulates in the joint recesses onto bridge seats.

Open deck joints should be located only where drainage can be directed to bypass the bearings and discharged directly below the joint.

Closed or waterproof deck joints should be provided where joints are located directly above structural members and bearings that would be adversely affected by debris accumulation. Where deicing chemicals are used on bridge decks, sealed or waterproofed joints should be provided.

C14.5.2.2

Open joints with drainage troughs should not be placed where the use of horizontal drainage conductors would be necessary.

For straight bridges, the longitudinal elements of deck joints, such as plate fingers, curb and barrier plates, and modular bridge joint system support bars, should be placed parallel to tbe longitudinal axis of the deck. For curved and skewed structures, allowance shall be made for deck end movements consistent with that provided by the bearings.

Where possible, modular bridge joint systems should not be located in the middle of curved bridges to avoid unforeseeable movement demands. Preferably, modular bridge joint systems should not be located near traffic signals or toll areas so as to avoid extreme braking forces.

End rotations of deck-type structures occur about axes that are roughly parallel to the centerline of bearings along the bridge seat. In skewed structures, these axes are not normal to the direction of longitudinal movement. Sufficient lateral clearances between plates, open joints, or elastomeric joint devices should be provided to prevent binding due to lack of alignment between longitudinal and rotational movements.

14.5.3 Design Requirements

14.5.3.1 Movements During Construction

Where practicable, construction staging should be used to delay construction of abutments and piers located in or adjacent to embankments until the embankments have been placed and consolidated. Otherwise, deck joints should be sized to accommodate the probable abutment and pier movements resulting from embankment consolidation after their construction.

Closure pours in concrete structures may be used to minimize the effect of prestress-induced shortening on the width of seals and the size of bearings.

C14.5.3.1

Where it is either desirable or necessary to accommodate settlement or other construction movements prior to deck joint installation and adjustment, the following construction controls may be used:

- Placing abutment embankment prior to pier and abutment excavation and construction,
- Surcharging embankments to accelerate consolidation and adjustment of in-situ soils,
- Backfilling wall-type abutments up to subgrade prior to placing bearings and backwalls above bridge seats, and
- Using deck slab blockouts to allow placing the major portion of span dead loads prior to joint installation.

14.5.3.2 Design Movements

A roadway surface gap, W, in in., in a transverse deck joint, measured in the direction of travel at the maximum movement determined using the appropriate strength load combination specified in Table 3.4.1-1 shall satisfy:

- For single gap:

$$W \leq 4.0\,\text{in.} \qquad (14.5.3.2\text{-}1)$$

- For multiple modular gaps:

$$W \leq 3.0\,\text{in.} \qquad (14.5.3.2\text{-}2)$$

For steel and nonprestressed wood superstructures, the minimum opening of a transverse deck joint and roadway surface gap therein shall not be less than 1.0 in. for movements determined using the appropriate strength load combination specified in Table 3.4.1-1. For concrete superstructures, consideration shall be given to the opening of joints due to creep and shrinkage that may require initial minimum openings of less than 1.0 in. at the strength limit state.

C14.5.3.2

Unless more appropriate criteria are available, the maximum surface gap of longitudinal roadway joints shall not exceed 1.0 in. at the strength limit state.

At the maximum movement determined using the appropriate strength load combination specified in Table 3.4.1-1, the opening between adjacent fingers on a finger plate shall not exceed:

- 2.0 in. for longitudinal openings greater than 8.0 in., or
- 3.0 in. for longitudinal openings 8.0 in. or less.

The finger overlap at the maximum movement shall be not less than 1.5 in. at the strength limit state.

Where bicycles are anticipated in the roadway, the use of special covering floor plates in shoulder areas shall be considered.

Safe operation of motorcycles is one of the prime considerations in choosing the size of openings for finger plate joints.

14.5.3.3 Protection

Deck joints shall be designed to accommodate the effects of vehicular traffic, pavement maintenance equipment, and other long-term environmentally induced damage.

Joints in concrete decks should be armored with steel shapes, weldments, or castings. Such armor shall be recessed below roadway surfaces and be protected from snowplows.

Jointed approach pavements shall be provided with pressure relief joints and/or pavement anchors. Approaches to integral bridges shall be provided with cycle control pavement joints.

C14.5.3.3

Snowplow protection for deck joint armor and joint seals may consist of:

- Concrete buffer strips 12.0 to 18.0 in. wide with joint armor recessed 0.25 to 0.375 in. below the surface of such strips,
- Tapered steel ribs protruding up to 0.50 in. above roadway surfaces to lift the plow blades as they pass over the joints,
- Recesses in flexible pavement to position armor below anticipated rutting, but not so deep as to pond water.

Additional precautions to prevent damage by snowplows should be considered where the skew of the joints coincides with the skew of the plow blades, typically 30° to 35°.

14.5.3.4 Bridging Plates

Joint bridging plates and finger plates should be designed as cantilever members capable of supporting wheel loads at the strength limit state.

The differential settlement between the two sides of a joint bridging plate shall be investigated. If the differential settlement cannot be either reduced to acceptable levels or accommodated in the design and detailing of the bridging plates and their supports, a more suitable joint should be used.

C14.5.3.4

Where binding of bridging plates can occur at bearing joints due to differential vertical translatinn of abutting structural elements or due to the longitudinal movement of bridging plates and bearings on different planes, the plates can be subjected to the total dead and live load superstructure reaction. Where bridging plates are not capable of resisting such loads, they may fail and become a hazard to the movement of vehicular traffic.

Rigid bridging plates shall not be used at elastomeric bearings or hangers unless they are designed as cantilever members, and the contract documents require them to be installed to prevent binding of the joints due to horizontal and vertical movement at bearings.

Thick elastomeric bearings responding to the application of vertical load or short hangers responding to longitudinal deck movements may cause appreciable differential vertical translation of abutting structural elements at bearing joints. To accommodate such movements, an appropriate type of sealed joint or a waterproofed open joint, rather than a structural joint with rigid bridging plates or fingers, should be provided.

14.5.3.5 Armor

Joint-edge armor embedded in concrete substrates should be pierced by 0.75-in. minimum-diameter vertical vent holes spaced on not more than 18.0 in. centers.

Metal surfaces wider than 12.0 in. that are exposed to vehicular traffic shall be provided with an antiskid treatment.

C14.5.3.5

Vent holes are necessary to help expel entrapped air and facilitate the attainment of a solid concrete substrate under joint edge armor.

The contract documents should require hand packing of concrete under joint armor.

14.5.3.6 Anchors

Armor anchors or shear connectors should be provided to ensure composite behavior between the concrete substrate and the joint hardware and to prevent subsurface corrosion by sealing the boundaries between the armor and concrete substrate. Anchors for edgebeams of strip seals and MBJS shall be designed for the snowplow load as required in Article 14.5.1.2.

Anchors for roadway joint armor shall be directly connected to structural supports or extended to effectively engage the reinforced concrete substrate.

The free edges of roadway armor, more than 3.0 in. from other anchors or attachments, shall be provided with 0.50-in. diameter end-welded studs not less than 4.0 in. long spaced at not more than 12.0 in. from other anchors or attachments. The edges of sidewalk and barrier armor shall be similarly anchored.

C14.5.3.6

Snow plow impact should also be considered in designing anchors.

14.5.3.7 Bolts

Anchor bolts for bridging plates, joint seals, and joint anchors shall be fully torqued high-strength bolts. The interbedding of nonmetallic substrates in connections with high-strength bolts shall be avoided. Cast-in-place anchors shall be used in new concrete. Expansion anchors, countersunk anchor bolts, and grouted anchors shall not be used in new construction.

C14.5.3.7

Grouted anchors may be used for maintenance of existing joints.

14.5.4 Fabrication

Shapes or plates shall be of sufficient thickness to stiffen the assembly and minimize distortion due to welding.

C14.5.4

Joint straightness and fit of components should be enhanced by the use of shapes, bars, and plates 0.50 in. or thicker.

To ensure appropriate fit and function, the contract documents should require that:

- Joint components be fully assembled in the shop for inspection and approval,
- Joints and seals be shipped to the job-site fully assembled, and
- Assembled joints in lengths up to 60.0 ft. be furnished without intermediate field splices.

Construction procedures and practices should be developed to allow joint adjustment for installation temperatures without altering the orientation of joint parts established during shop assembly.

14.5.5 Installation

14.5.5.1 Adjustment

The setting temperature of the bridge or any component thereof shall be taken as the actual air temperature averaged over the 24-hour period immediately preceding the setting event.

For long structures, an allowance shall be included in the specified joint widths to account for the inaccuracies inherent in establishing installation temperatures and for superstructure movements that may take place during the time between the setting of the joint width and completion of joint installation. In the design of joints for long structures, preference should be given to those devices, details, and procedures that will allow joint adjustment and completion in the shortest possible time.

Connections of joint supports to primary members should allow horizontal, vertical, and rotational adjustments.

Construction joints and blockouts should be used where practicable to permit the placement of backfill and the major structure components prior to joint placement and adjustment.

C14.5.5.1

Except for short bridges where installation temperature variations would have only a negligible effect on joint width, plans for each expansion joint should include required joint installation widths for a range of probable installation temperatures. For concrete structures, use of a concrete thermometer and measurement of temperature in expansion joints between superstructure units may be considered.

An offset chart for installation of the expansion joints is recommended to account for uncertainty in the setting temperature at the time of design. The designer may provide offset charts in appropriate increments and include the chart on the design drawings. Placement of the expansion joint hardware during deck forming should accommodate differences between setting temperature and an assumed design installation temperature.

Construction procedures that will allow major structure dead load movements to occur prior to placement and adjustment of deck joints should be used.

14.5.5.2 Temporary Supports

Deck joints shall be furnished with temporary devices to support joint components in proper position until permanent connections are made or until encasing concrete has achieved an initial set. Such supports shall provide for adjustment of joint widths for variations in installation temperatures.

C14.5.5.2

Temporary attachments should be released to avoid damaging anchorage encasements due to movement of superstructures responding to rapid temperature changes.

For long structures with steel primary members, instructions should be included in the contract documents to ensure the removal of temporary supports or release of their connections as soon as possible after concrete placement.

14.5.5.3 Field Splices

Joint designs shall include details for transverse field splices for staged construction and for joints longer than 60.0 ft. Where practicable, splices should be located outside of wheel paths and gutter areas.

C14.5.5.3

Details in splices should be selected to maximize fatigue life.

Field splices provided for staged construction shall be located with respect to other construction joints to provide sufficient room to make splice connections.

When a field splice is required, the contract documents should require that permanent seals not be placed until after joint installation has been completed. Where practicable, only those seals that can be installed in one continuous piece should be used. Where field splicing is unavoidable, splices should be vulcanized.

Splices for less critical portions of joints or for lightly loaded joints should be provided with connections rigid enough to withstand displacement if joint armor is used as a form during concrete placement.

14.5.6 Considerations for Specific Joint Types

14.5.6.1 Open Joints

Open deck joints shall permit the free flow of water through the joint. Open deck joints should not be used where deicing chemicals are applied. Piers and abutments at open joints shall satisfy the requirements of Article 2.5.2 in order to prevent the accumulation of water and debris.

C14.5.6.1

Under certain conditions, open deck joints can provide an effective and economical solution. In general, open joints are well-suited for secondary highways where little sand and salt are applied during the winter. They are not suited for urban areas where the costs of provisions for deck joint drainage are high.

Satisfactory performance depends upon an effective deck drainage system, control of deck discharge through joints, and containment and disposal of runoff from the site. It is essential that surface drainage and roadway debris not be permitted to accumulate on any part of the structure below such joints.

Protection against the deleterious effects of deck drainage may include shaping structural surfaces to prevent the retention of roadway debris and providing surfaces with deflectors, shields, covers, and coatings.

14.5.6.2 Closed Joints

Sealed deck joints shall seal the surface of the deck, including curbs, sidewalks, medians, and, where necessary, parapet and barrier walls. The sealed deck joint shall prevent the accumulation of water and debris, which may restrict its operation. Closed or waterproof joints exposed to roadway drainage shall have structure surfaces below the joint shaped and protected as required for open joints.

Joint seals should be watertight and extrude debris when closing.

Drainage accumulated in joint recesses and seal depressions shall not be discharged on bridge seats or other horizontal portions of the structure.

Where joint movement is accommodated by a change in the geometry of elastomeric glands or membranes, the glands or membranes shall not come into direct contact with the wheels of vehicles.

C14.5.6.2

Completely effective joint seals have yet to be developed for some situations, particularly where there are severely skewed joints with raised curbs or barriers, and especially where joints are subjected to substantial movements. Consequently, some type of open or closed joint, protected as appropriate, should be considered instead of a sealed joint.

Sheet and strip seals that are depressed below the roadway surface and that are shaped like gutters will fill with debris. They may burst upon closing, unless the joints that they seal are extended straight to the deck edges where accumulated water and debris can be discharged clear of the structure. To allow this extension and safe discharge, it may be necessary to move the backwalls and bridge seats of some abutment types forward until the backwalls are flush with the wingwalls, or to reposition the wingwalls so that they do not obstruct the ends of the deck joints.

14.5.6.3 Waterproofed Joints

Waterproofing systems for joints, including joint troughs, collectors, and downspouts, shall be designed to collect, conduct, and discharge deck drainage away from the structure.

In the design of drainage troughs, consideration should be given to:

- Trough slopes of not less than 1.0 in./ft.;
- Open-ended troughs or troughs with large discharge openings;
- Prefabricated troughs;
- Troughs composed of reinforced elastomers, stainless steel, or other metal with durable coatings;
- Stainless steel fasteners;
- Troughs that are replaceable from below the joint;
- Troughs that can be flushed from the roadway surface; and
- Welded metal joints and vulcanized elastomeric splices.

14.5.6.4 Joint Seals

Seals shall accommodate all anticipated movements.

In the choice of a seal type, consideration should be given to seals that:

- Are preformed or prefabricated,
- Can be replaced without major joint modification,
- Do not support vehicular wheel loads,
- Can be placed in one continuous piece,
- Are recessed below joint armor surface,
- Are mechanically anchored, and
- Respond to joint width changes without substantial resistance.

Elastomeric material for seals should be:

- Durable, of virgin neoprene or natural rubber and reinforced with steel or fabric laminates;
- Vulcanized;

- Verified by long-term cyclic testing; and
- Connected by adhesives that are chemically cured.

14.5.6.5 Poured Seals

Unless data supports a smaller joint width, the joint width for poured seals should be at least 6.0 times the anticipated joint movement determined using the appropriate strength load combination specified in Table 3.4.1-1.

Sealant bond to metal and masonry materials should be documented by national test methods.

C14.5.6.5

Poured seals should be used only for joints exposed to small movements and for applications where watertightness is of secondary importance.

14.5.6.6 Compression and Cellular Seals

Where seals with heavy webbing are exposed to the full movement range, joints shall not be skewed more than 20°.

Compression seals for bearing joints shall not be less than 2.5 in. nor more than 6.0 in. wide when uncompressed and shall be specified in width increments in multiples of 0.5 in.

Primary roadway seals shall be furnished without splices or cuts, unless specifically approved by the Engineer.

In gutter and curb areas, roadway seals shall be bent up in gradual curves to retain roadway drainage. Ends of roadway seals shall be protected by securely attached vented caps or covers. Secondary seals in curbs and barrier areas may be cut and bent as necessary to aid in bending and insertion into the joint.

Closed cell seals shall not be used in joints where they would be subjected to sustained compression, unless seal and adhesive adequacy have been documented by long-term demonstration tests for similar applications.

C14.5.6.6

Compression seals should be used only in those structures where the joint movement range can be accurately predicted.

Performance of compression and cellular seals is improved when concrete joint recesses are made by saw-cutting in a single pass, rather than by being cast with the aid of removable forms.

14.5.6.7 Sheet and Strip Seals

In the selection and application of either sheet or strip seals, consideration should be given to:

- Joint designs for which glands with anchorages not exposed to vehicular loadings,
- Joint designs that allow complete closure without detrimental effects to the glands,
- Joint designs where the elastomeric glands extend straight to deck edges rather than being bent up at curbs or barriers,
- Decks with sufficient crown or superelevation to ensure lateral drainage of accumulated water and debris,
- Glands that are shaped to expel debris, and
- Glands without abrupt changes in either horizontal or vertical alignment.

Sheet and strip seals should be spliced only when specifically approved by the engineer.

14.5.6.8 Plank Seals

Application of plank seals should be limited to structures on secondary roads with light truck traffic, and that have unskewed or slightly skewed joints.

Consideration should be given to:

- Seals that are provided in one continuous piece for the length of the joint,
- Seals with splices that are vulcanized, and
- Anchorages that can withstand the forces necessary to stretch or compress the seal.

C14.5.6.8

Plank-type seals should not be used in joints with unpredictable movement ranges.

14.5.6.9 Modular Bridge Joint Systems (MBJS)

14.5.6.9.1 General

These Articles of the specifications address the performance requirements, strength limit state design, and fatigue limit state design of modular bridge joint systems (MBJS).

These Specifications were developed primarily for, and shall be applied to, the two common types of MBJS, multiple and single support bar systems, including swivel-joist systems.

C14.5.6.9.1

These MBJS design specifications provide a rational and conservative method for the design of the main load carrying steel components of MBJS. These Specifications do not specifically address the functional design of MBJS or the design of the elastomeric parts. These Specifications are based on research described in Dexter et al. (*1997*), which contains extensive discussion of the loads and measured dynamic response of MBJS and the fatigue resistance of common MBJS details. Fatigue test procedures were developed for the structural details as well.

Common types of MBJS are shown in Figures C1 through C3.

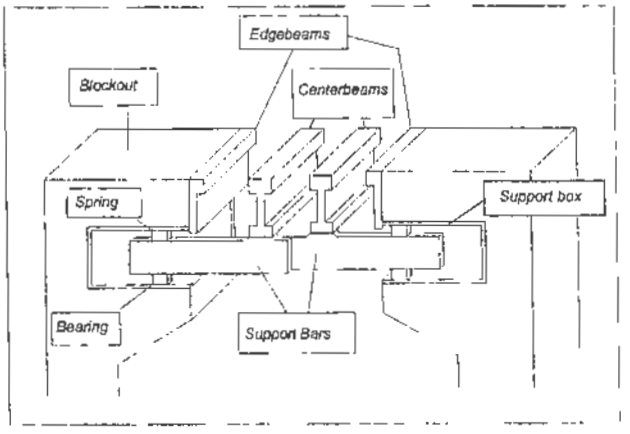

Figure C14.5.6.9.1-1 Cut-Away View of Typical Welded-Multiple-Support-Bar (WMSB) Modular Bridge Joint System (MBJS) Showing Support Bars Sliding within Support Boxes.

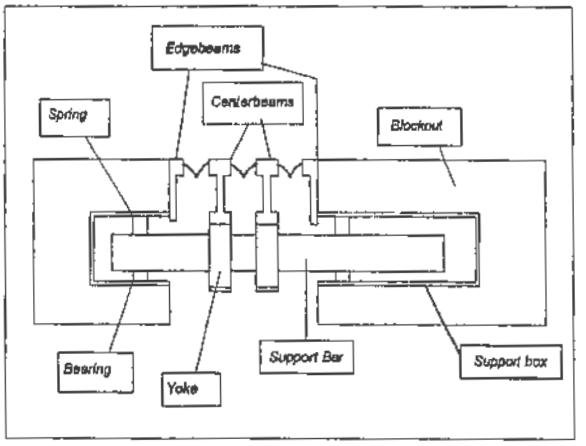

Figure C14.5.6.9.1-2 Cross-Section View of Typical Single-Support-Bar (SSB) Modular Bridge Joint System (MBJS) Showing Multiple Centerbeams with Yokes Sliding on a Single Support Bar.

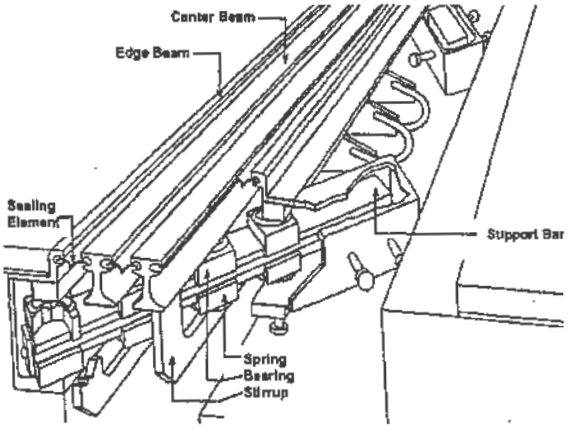

Figure C14.5.6.9.1-3 Cut-Away View of a "Swivel Joint," i.e., a Special Type of Single-Support-Bar (SSB) Modular Bridge Joint System (MBJS) with a Swiveling Single Support Bar.

14.5.6.9.2 Performance Requirements

The required minimum MBJS movement range capabilities for the six possible degrees of freedom given in Table 1 shall be added to the maximum movement and rotations calculated for the entire range of seals in the MBJS determined using the appropriate strength load combination specified in Table 3.4.1-1.

C14.5.6.9.2

The MBJS should be designed and detailed to minimize excessive noise or vibration during the passage of traffic.

A common problem with MBJS is that the seals fill with debris. Traffic passing over the joint can work the seal from its anchorage by compacting this debris. MBJS systems can eject most of this debris in the traffic lanes if the seals are opened to near their maximum opening. Therefore, it is prudent to provide for additional movement capacity.

MBJS should permit movements in all six degrees of freedom, i.e., translations in all three directions and rotations about all three axes. While it is mandatory to provide at least 1.0 in. movement in the longitudinal direction, as shown in Table 1, no more than 2.0 in. should be provided in addition to the maximum calculated movement if feasible. Also, more than 1.0 in. should not be added if it causes a further seal to be used. In the five degrees of freedom other than the longitudinal direction, the MBJS should provide the maximum calculated movement in conjunction with providing for at least the minimum additional movement ranges shown in Table 1. Half of the movement range shall be assumed to occur in each direction about the mean position. Some bridges may require greater than the additional specified minimum values.

The designer should consider showing the total estimated transverse and vertical movement in each direction, as well as the rotation in each direction about the three principal axes on the contract plans. Vertical movement due to vertical grade, with horizontal bearings, and vertical movement due to girder end rotation may also be considered.

Further design guidelines and recommendations can be found in Chapter 19 of the *AASHTO LRFD Bridge Construction Specifications* and Dexter et al. (*1997*).

Table 14.5.6.9.2-1 Additional Minimum Movement Range Capability for MBJS.

Type of Movement	Minimum Design Movement Range*
Longitudinal Displacement	Estimated Movement + 1.0 in.
Transverse Movement	1.0 in.
Vertical Movement	1.0 in.
Rotation around Longitudinal Axis	1°
Rotation Around Transverse Axis	1°
Rotation Around Vertical Axis	0.5°

* Total movement ranges presented in the table are twice the plus or minus movement.

14.5.6.9.3 Testing and Calculation Requirements

MBJS shall satisfy all test specifications detailed in Appendix A of the *AASHTO LRFD Bridge Construction Specifications*.

Each configuration of MBJS shall be designed for the strength and fatigue, and fracture limit states as specified in Articles 14.5.6.9.6 and 14.5.6.9.7.

14.5.6.9.4 Loads and Load Factors

Edgebeams, anchors, centerbeams, support bars, connections between centerbeams and support bars, support boxes, and connections, if any, to elements of the structure, such as girders, truss chords, crossbeams, etc., and other structural components shall be designed for the strength, and fatigue and fracture limit states for the simultaneous application of vertical and horizontal axle loads. The edgebeams and anchors of MBJS in snow regions shall also be designed for the strength limit state for the snowplow load defined in Article 14.5.1.2. The design lane load need not be considered for MBJS.

The two wheel loads from each axle shall be centered 72.0 in. apart transversely. Each wheel load shall be distributed to the various edgebeams and centerbeams as specified in Article 14.5.6.9.5. The fraction of the wheel loads applied to each member shall be line loads applied at the center of the top surface of a member with a width of 20.0 in.

For the strength limit state, the vertical wheel loads shall be from the design tandem specified in Article 3.6.1.2.3; the wheel loads from the design truck in Article 3.6.1.2.2 need not be considered for the strength limit state of MBJS. Both of the tandem axles shall be considered in the design if the joint opening exceeds 4.0 ft. The vertical wheel load shall be increased by the dynamic load allowance specified for deck joints in Table 3.6.2.1-1.

The horizontal load for the strength limit state shall be 20 percent of the vertical wheel load ($LL + IM$), applied along the same line at the top surface of the centerbeam or edgebeam. For MBJS installed on vertical grades in excess of 5 percent, the additional horizontal component due to grade shall be added to the horizontal wheel load.

To investigate the strength limit state, the axles shall be oriented and positioned transversely to maximize the force effect under consideration.

The vertical wheel load ranges for the fatigue limit state shall be from the largest axle load from the three-axle design truck specified in Article 3.6.1.2.2. For fatigue limit state design of MBJS, this axle load shall be considered as the total load on a tandem, i.e., the total load shall be split into two axle loads spaced 4.0 ft. apart. Both of these tandem axles shall be considered in the design if the joint opening exceeds 4.0 ft. The vertical load range shall be increased by the dynamic load allowance specified for deck joints in Table 3.6.2.1-1. **The load factors to consider shall be as specified in Table 3.4.1-1 for the Fatigue I case.**

The horizontal load ranges for the fatigue limit state shall be at least 20 percent of the vertical wheel load range ($LL + IM$) for fatigue. For MBJS installed on vertical grades in excess of 5 percent, the additional

C14.5.6.9.4

The vertical axle load for fatigue limit state design is one-half the 32.0 kip axle load of the design truck specified in Article 3.6.1.2.2 or 16.0 kips. This reduction recognizes that the main axles of the design truck are a simplification of actual tandem axles. The simplification is not satisfactory for MBJS and other expansion joints because expansion joints experience a separate stress cycle for each individual axle.

For strength limit state design, there are two load combinations that could be considered. However, recognizing that each main axle of the design truck should actually be treated as 32.0 kip tandems, it is clear the 50.0 kip design tandem, which is not used for fatigue limit state design, will govern for strength limit state design.

The loads specified for fatigue limit state design actually represent load ranges. When these loads are applied to a structural analysis model with no dead load applied to the model, the moment, force, or stress that is computed everywhere represents a moment, force or stress range. In service, these stress ranges are partly due to the downward load and partly due to upward rebound from the dynamic impact effect.

The dynamic load allowance (impact factor) specified for deck joints of 75 percent was developed from field testing of MBJS conducted in Europe and was confirmed in field tests described in Dexter et al. (*1997*). The stress range due to the load plus this dynamic load allowance represents the sum of the downward part of that stress range and the upward part of the stress range due to rebound. Measurements, described in Dexter et al. (*1997*), showed that the maximum downward amplification of the static load is 32 percent, with about 31 percent rebound in the upward direction.

The vertical axle load range with impact for fatigue limit state design is one-half of the largest axle load of the design truck specified in Article 3.6.1.2.2, multiplied by 1.75 to include the dynamic load allowance, multiplied by **a load factor of 1.5 (or 2.0 times** 0.75) ~~for a fatigue load factor~~ as specified in Table 3.4.1-1 **for the Fatigue I case**, or **42.0** ~~21.0~~ kips. **The 0.75 load factor transforms axles of an HS20 truck to those of an HS15 fatigue truck which is presumed to represent the effective stress range. The factor 2.0 amplifies the effective stress range for the fatigue limit state to the presumed maximum expected stress range which with impact is required to be less than the fatigue threshold in Article 14.5.6.9.7a. It is the intent of the fatigue design specifications that the static load without impact considered (24 kips or 42.0 kips/1.75) should be infrequently exceeded, see Dexter et al. (*1997*).** ~~For the purposes of comparison to other proposed fatigue limit state design loads~~

horizontal component due to grade shall be added to the horizontal wheel load range.

To investigate the fatigue limit state, the axles shall be oriented perpendicular to the travel direction only, but shall be positioned transversely to maximize the force effect under consideration. In bridges with a skew greater than 14°, the two wheel loads from an axle may not be positioned on a centerbeam simultaneously, and the maximum stress ranges at a critical detail on the centerbeam may be the difference between the stresses due to the application of each wheel load separately.

~~(*Tschemmernegg 1991*) or to get perspective on the implications of this fatigue limit state design load in terms of the maximum expected axle loads and wheel loads, note that the stress range from this fatigue limit state vertical axle load range with impact is required to be less than half of the fatigue threshold in Article 14.5.6.9.7a. In effect, this comparison is the same as requiring that the fatigue threshold exceed a stress range computed from a vertical axle load range at the fatigue limit state with impact of 42.0 kips, or a wheel load range at the fatigue limit state with impact of 21.0 kips. Without the dynamic load allowance, the fatigue limit state static axle load range would be 24.0 kips. The intent of the fatigue design specifications is that this load should be infrequently exceeded, see Dexter et al. (*1997*).~~

Field measurements were taken at a variety of locations; so typical truck excitations should be reflected in the dynamic load allowance. However, a joint located on a structure with significant settlement or deterioration of the approach roadway may be exposed to a dynamic load allowance 20 percent greater due to dynamic excitation of the trucks.

MBJS with centerbeam spans less than 4.0 ft. are reported to have lower dynamic effects (*Pattis 1993, Tschemmernegg and Pattis 1994*). The fatigue limit state design provisions of Article 14.5.6.9.7 happen to also limit the spans of typical 5.0 in. deep centerbeams to around 4.0 ft. anyway, so there is no need for a specific limitation of the span.

At sites with a tight horizontal curve (less than 490 ft. radius) the vertical moments could be about 20 percent higher than would be expected. An increase in the dynamic load allowance for cases where there is a tight horizontal curve is not considered necessary if the speed of trucks on these curves is limited. In this case, the dynamic impact will be less than for trucks at full speed and the decreased dynamic impact will approximately offset the increased vertical load due to the horizontal curve.

The dynamic load allowance is very conservative when applied to the vertical load for strength limit state design, since in strength limit state design peak loads, not load ranges, are of interest. In the measurements made on MBJS in the field, the maximum downward vertical moment was only 1.32 times the static moment. There are usually no consequences of this conservative simplification since the proportions of the members are typically governed by fatigue and not strength.

The horizontal loads are taken as 20 percent of the vertical load plus the dynamic load allowance. In-service measurements, described in Dexter et al. (*1997*), indicate that the 20 percent horizontal load range is the largest expected from traffic at steady speeds, including the effect of acceleration and routine braking. The 20 percent horizontal load range for fatigue limit state design represents 10 percent forward and 10 percent backward.

Where strength limit state design is considered, the

20 percent horizontal load requirement corresponds to a peak load of 20 percent applied in one direction. The 20 percent horizontal peak load is appropriate for strength limit state design. However, the field measurements, described in Dexter et al. (*1997*), show that the horizontal force effects resulting from extreme braking can be much greater than at steady speeds. Therefore, the 20 percent peak horizontal load represents the extreme braking for strength limit state design. For fatigue limit state design, these extreme events occur so infrequently that they do not usually need to be taken into account in most cases.

Special consideration should be given to the horizontal forces if the MBJS is located near a traffic light, stop sign, or toll facility or if the centerbeam is unusually wide.

14.5.6.9.5 Distribution of Wheel Loads

Each edgebeam shall be designed for 50 percent of the vertical and horizontal wheel loads specified in Article 14.5.6.9.4.

Table 1 specifies the centerbeam distribution factor, i.e., the percentage of the design vertical and horizontal wheel loads specified in Article 14.5.6.9.4 that shall be applied to an individual centerbeam for the design of that centerbeam and associated support bars. Distribution factors shall be interpolated for centerbeam top flange widths not given in the table, but in no case shall the distribution factor be taken as less than 50 percent. The remainder of the load shall be divided equally and applied to the two adjacent centerbeams or edgebeams.

Table 14.5.6.9.5-1 Centerbeam Distribution Factors.

Width of Centerbeam Top Flange	Distribution Factor
2.5 in. (or less)	50%
3.0 in.	60%
4.0 in.	70%
4.75 in.	80%

C14.5.6.9.5

For the convenience of the designer, the vertical axle load range with impact for fatigue limit state design on one centerbeam 2.5 in. or less in width is **21.0** ~~10.5~~ kips. On the centerbeam, each fraction of the wheel load of **10.5** ~~5.3~~ kips is spaced 72.0 in. apart distributed over a width of 20.0 in. with a magnitude of **0.525** ~~0.263~~ kips/in.

The distribution factor, i.e., the fraction of the design wheel load range assigned to a single centerbeam, is a function of applied load, tire pressure, gap width, and centerbeam height mismatch. Unfortunately, many of the factors affecting the distribution factor are difficult to quantify individually and even more difficult to incorporate in an equation or graph. Existing methods to estimate the distribution factor do not incorporate all of these variables and consequently can be susceptible to error when used outside the originally intended range. In view of this uncertainty, a simplified tabular method is used to estimate the distribution factor. Alternative methods are permitted if they are based on documented test data.

Wheel load distribution factors shown in Table 1 are based on field and laboratory testing, described in Dexter et al. (*1997*), and were found to be in acceptable agreement with the findings of other researchers. These distribution factors are based on the worst-case assumption of maximum joint opening (maximum gap width). Calculating the stress ranges at maximum gap opening is approximately 21 percent too conservative for fatigue limit state design. However, as explained in Dexter et al. (*1997*), this conservatism compensates for a lack of conservatism in the AASHTO ~~HS20~~ fatigue design truck axle load.

~~As discussed in Article C14.5.6.9.4, f~~ For comparison to the fatigue threshold, the factored static axle load range, without the dynamic load allowance, would be 24.0 kips **(or 42.0 kips/1.75 as discussed in Article C14.5.6.9.4)**. ~~This load is twice the fatigue limit state design load specified in Article 14.5.6.9.4 and it is for discussion purposes only. As such, t~~ The static axle

load range at the fatigue limit state is supposed to represent an axle load that is rarely exceeded. However, the fatigue limit state design load is multiplied by a distribution factor that is 21 percent too large, so in effect, this is equivalent to a static axle load range at the fatigue limit state of 29.0 kips that should be rarely exceeded, if correct distribution factors were used. This is more consistent with the statistics of weigh-in-motion data where axle loads with exceedence levels of 0.01 percent were up to 36.0 kips, see Schilling (*1990*) or Nowak and Laman (*1995*).

A mitigating factor on the impact of these larger axle loads is that the distribution factor decreases with increasing axle load. Because of this effect, measurements reported in Dexter et al. (*1997*) show that as the axle load is increased from 24.0 to 36.0 kips, an increase of 50 percent, the load on one centerbeam increases from 12.6 to only 14.6 kips, an increase of only 16 percent.

Even though maximum gap opening occurs only rarely, it is an appropriate assumption for checking the Strength-I limit state. No additional conservatism is warranted in this case, however, because the dynamic load allowance is about 32 percent too conservative for strength limit state design only, as discussed in Article C14.5.6.9.4.

Another advantage of using the conservative distribution factors is that it may compensate for ignoring the effect of potential centerbeam height mismatch. Laboratory studies show that a height mismatch of 0.125 in. resulted in a 24 percent increase in the measured distribution factor, see Dexter et al. (*1997*). Although such mismatch is not common presently, and recent construction specifications are supposed to preclude this mismatch, it is prudent to anticipate that it may occur.

14.5.6.9.6 Strength Limit State Design Requirements

Where the MBJS is analyzed for the strength limit state, the gap between centerbeams shall be assumed to be at the fully opened position, typically 3.0 in.

The MBJS shall be designed to withstand the force effects for the strength limit state specified in Article 6.5.4 by applying the provisions of Articles 6.12 and 6.13, as applicable. All sections shall be compact, satisfying the provisions of Articles A6.1, A6.2, A6.3.2, and A6.3.3. MBJS shall be designed to withstand the load combination for the Strength I limit state that is specified in Table 3.4.1-1 for the simultaneous application of vertical and horizontal axle loads specified in Article 14.5.6.9.4. Dead loads need not be included. Loads shall be distributed as specified in Article 14.5.6.9.5.

Anchors shall be investigated at the strength limit state due to vertical wheel loads without the horizontal wheel loads using the requirements of Article 6.10.10.4.3. The anchors shall be checked separately for

C14.5.6.9.6

Anchorage calculations for strength and fatigue limit states are presented in Dexter et al. (*2002*). A prescriptive design was found that satisfies the strength and fatigue limit state requirements presented in this specification, including the snowplow load. This design may be adopted without presenting explicit calculations. This design consists of a steel edgebeam minimum thickness 0.375 in. with Grade 50 (50.0 ksi yield) 0.5 in. diameter welded headed anchors (studs) with length of anchor of 6.0 in. spaced every 12.0 in. The welded headed anchor shall have minimum cover depth of 3.0 in., except where over the support boxes, where the cover depth is 2.0 in.

Analyzing the centerbeam as a continuous beam over rigid supports has been found to give good agreement with measured strains for loads in the vertical direction. For loads in the horizontal direction, the continuous beam model is conservative. For the loads in the horizontal direction, more accurate results can be

the horizontal wheel loads at the strength limit state. In snow regions, another separate analysis shall be performed for the anchors for the snowplow load defined in Article 14.5.1.2. Pullout or breakout at the strength limit state under each of these loads shall be investigated by the latest ACI 318 (*Building Code Requirements for Structural Concrete*), using the following resistance factors:

- For anchors governed by the steel, the resistance factors are:

  $\phi_{tension} = 0.8\underline{0}$
  $\phi_{shear} = 0.75$

- For anchors governed by the concrete, the load factors for Condition A, supplemental reinforcement in the failure area, are:

  $\phi_{A\ tension} = 0.85$
  $\phi_{A\ shear} = 0.85$

- For anchors governed by the concrete, the load factors for Condition B, no supplemental reinforcement, are:

  $\phi_{B\ tension} = 0.75$
  $\phi_{B\ shear} = 0.75$

14.5.6.9.7 Fatigue Limit State Design Requirements

14.5.6.9.7a General

MBJS structural members, including centerbeams, support bars, connections, bolted and welded splices, and attachments, shall meet the fracture toughness requirements in Article 6.6.2. Bolts subject to tensile fatigue shall satisfy the provisions of Article 6.13.2.10.3.

MBJS structural members, including centerbeams, support bars, connections, bolted and welded splices, and attachments, shall be designed for the fatigue limit state as specified in Article 6.6.1.2 and as modified and supplemented herein.

Each detail shall satisfy:

$$\cancel{\Delta f = \frac{1}{2}\Delta F_{TH}}$$

$$\underline{\Delta f \le (\Delta F)_{TH}} \qquad (14.5.6.9.7a\text{-}1)$$

where:

Δf = force effect, design live load stress range due to the simultaneous application of vertical and horizontal axle loads specified in Article14.5.6.9.4 and distributed as specified in Article 14.5.6.9.5, and calculated as specified in Article

achieved by treating the centerbeams and support bars as a coplanar frame pinned at the ends of the support bars.

Maximum centerbeam stresses in interior spans are typically generated with one of the wheel loads centered in the span. However, if the span lengths are the same, the exterior spans (first from the curb) will typically govern the design. In an optimum design, this exterior span should be about 10 percent less than typical interior spans.

The vertical and horizontal wheel loads are idealized as line loads along the centerlines of the centerbeams, i.e., it is not necessary to take into account eccentricity of the forces on the centerbeam. The maximum reaction of the centerbeam against the support bar is generated when the wheel load is centered over the support bar. This situation may govern for the throat of the centerbeam/support bar weld, for design of the stirrup of a single-support-bar system, or for design of the support bar.

MBJS installed on skewed structures may require special attention in the design process.

C14.5.6.9.7a

The fatigue limit state strength of particular details in aluminum are approximately one-third the fatigue limit state strength of the same details in steel and, therefore, aluminum is typically not used in MBJS.

Yield strength and fracture toughness and weld quality have not been noted as particular problems for MBJS.

The design of the MBJS will typically be governed by the stress range at fatigue limit state critical details. The static strength limit state must also be checked according to the requirements of Article 14.5.6.9.6, but will typically not govern the design unless the total opening range and the support bar span is very large. Alternate design methods and criteria may be used if such methods can be shown through testing and/or analysis to yield fatigue-resistant and safe designs. The target reliability level for the fatigue limit state is 97.5 percent probability of no fatigue cracks over the lifetime of the MBJS.

Provisions are not included for a finite life fatigue limit state design **(Fatigue II case as defined in Article 3.4.1)**. Typically, most structures that require a modular expansion joint carry enough truck traffic to justify an infinite-life fatigue limit state design approach **(Fatigue I case as defined in Article 3.4.1)**. Furthermore,

14.5.6.9.7b (ksi)

$(\Delta F)_{TH}$ = constant amplitude fatigue threshold taken from Table 6.6.1.2.5-3 for the detail category of interest (ksi)

The fatigue detail categories for the centerbeam-to-support-bar connection, shop splice, field splice, or other critical details shall be established by the fatigue testing as required by Article 14.5.6.9.3. All other details shall have been included in the test specimen. Details that did not crack during the fatigue test shall be considered noncritical. The fatigue detail categories for noncritical details shall be determined using ~~Figure 6.6.1.2.3-1 and~~ Table 6.6.1.2.3-1.

Anchors and edgebeams shall be investigated for the fatigue limit state considering the force effects from vertical and horizontal wheel loads. Shear connectors and other anchors shall be designed for the fatigue limit state to resist the vertical wheel loads according to the provisions of Article 6.10.10.2 **for the Fatigue I case defined in Article 3.4.1**. The force effects from the horizontal wheel loads need not be investigated for standard welded headed anchors.

Edgebeams shall be at least 0.375 in. thick. Edgebeams with standard welded headed anchors spaced at most every 12.0 in. need not be investigated for in-plane bending for the fatigue limit state.

uncertainty regarding the number of axles per truck and the number of fatigue cycles per axle would make a finite life design approach difficult, and little cost is added to the MBJS by designing for infinite fatigue life.

~~Division of the constant amplitude fatigue limit, CAFL, by two is consistent with the fatigue provisions in Article 6.6.1.2.5. This reduction recognizes that, because of the shape of typical truck weight spectra, the fatigue limit state design axle load is approximately one-half of the largest fatigue limit state axle load specified in Article 3.6.1.2.2 and as such should be compared to one half the fatigue threshold.~~ The intent of this procedure is to assure that the stress range from the fatigue limit state load range is less than the CAFL and thereby ensuring essentially an infinite fatigue life.

Fatigue-critical MBJS details include:

- the connection between the centerbeams and the support bars;
- connection of any attachments to the centerbeams (e.g., horizontal stabilizers or outriggers); and
- shop and/or field splices in the centerbeams.

MBJS details can in many cases be clearly associated with analogous details in the bridge design specifications. In other cases, the association is not clear and must be demonstrated through full-scale fatigue testing.

The detail of primary concern is the connection between the centerbeams and the support bars. A typical full-penetration welded connection, which was shown previously, can be associated with Category C. Fillet welded connections have very poor fatigue resistance and should not be allowed.

Bolted connections should be classified as a Category D detail, with respect to the bending stress range in the centerbeam. As in any construction, more than one bolt must be used in bolted connections.

The bolted connections in single-support-bar MBJS usually involve a yoke or stirrup through which the support bar slides and/or swivels. Field-welded splices of the centerbeams and edgebeams are also prone to fatigue. In new construction, it may be possible to make a full-penetration welded splice in the field before the joint is lowered into the blockout. However, in reconstruction work, the joint is often installed in several sections at a time to maintain traffic. In these cases, the splice must be made after the joint is installed. Because of the difficulty in access and position, obtaining a full-penetration butt weld in the field after the joint is installed may be impossible, especially if there is more than one centerbeam. Partial-penetration splice joints have inherently poor fatigue resistance and should not be allowed.

Bolted splices have been used and no cracking of these bolted splice details has been reported. The bolted

splice plates behave like a hinge, i.e., they do not take bending moments. As a result, such details are subjected only to small shear stress ranges and need not be explicitly designed for the fatigue limit state. However, the hinge in the span creates greater bending moments at the support bar connection, therefore, the span with the field splice must be much smaller than the typical spans to reduce the applied stress ranges at the support bar connection.

Thin stainless-steel slider plates are often welded like cover plates on the support bars. The fatigue strength of the ends of cover plates is Category E. However, there have not been any reports of fatigue cracks at these slider plate details in MBJS. The lack of problems may be because the support bar bending stress range is much lower at the location of the slider plate ends than at the centerbeam connection, which is the detail that typically governs the fatigue limit state design of the support bar. Also, it is possible that the fatigue strength is greater than that of conventional cover plates, perhaps because of the thinness of the slider plate.

The fatigue limit state of the support bars or centerbeams should also be checked at the location of welded attachments to react against the horizontal equidistant devices. In addition to checking the equidistant device attachments with respect to the stress range in the support bar, there is also some bending load in the attachment itself. The equidistant devices take part of the horizontal load, especially in single-support bar systems. The horizontal load is also transferred through friction in the bearings and springs of the centerbeam connection. However, since this transfer is influenced by the dynamic behavior of the MBJS, it is very difficult to quantify the load in the attachments.

These attachments are thoroughly tested in the Opening Movement Vibration Test required in Article 14.5.6.9.3. If the equidistant device attachments have no reported problems in the Opening Movement Vibration Test, they need not be explicitly designed as a loaded attachment for the fatigue limit state. If there were a fatigue problem with these attachments, it would be discovered in the Opening Movement Vibration Test.

14.5.6.9.7b Design Stress Range

The design stress ranges, Δf, at all fatigue critical details shall be obtained from structural analyses of the modular joint system due to the simultaneous application of vertical and horizontal axle loads specified in Article **14.5.6.9.4** ~~14.5.6.9.5~~ and distributed as specified in Article **14.5.6.9.5** ~~14.5.6.9.6~~. The MBJS shall be analyzed with a gap opening no smaller than the midrange configuration and no smaller than half of maximum gap opening. For each detail, the structural analysis shall include the worst-case position of the axle load to maximize the design stress range at that particular detail.

The nominal stress ranges, Δf, shall be calculated as follows for specific types of MBJS:

C14.5.6.9.7b

Since the design axle load and distribution factors represent a "worst case", the structural analysis for fatigue limit state design need not represent conditions worse than average. Therefore, for fatigue loading, the assumed gap can be equal to or greater than the midrange of the gap, typically 1.5 in., which is probably close to the mean or average opening. The gap primarily affects the support bar span.

See Article C14.5.6.9.6 for guidelines on the structural analysis. MBJS installed on skewed structures may require special attention in the design process. On structures with joint skews greater than 14°, it can be shown that the wheels at either end of an axle will not roll over a particular centerbeam simultaneously. This

- Single-Support-Bar Systems
  - Centerbeam: The design bending stress range, Δf, in the centerbeam at a critical section adjacent to a welded or bolted stirrup shall be the sum of the stress ranges in the centerbeam resulting from horizontal and vertical bending at the critical section. The effects of stresses in any load-bearing attachments, such as the stirrup or yoke, need not be considered when calculating the stress range in the centerbeam. For bolted single-support-bar systems, stress ranges shall be calculated on the net section.
  - Stirrup: The design stress range, Δf, in the stirrup or yoke shall consider the force effects of the vertical reaction force range between the centerbeam and support bar. The stress range shall be calculated by assuming a load range in the stirrup that is greater than or equal to 30 percent of the total vertical reaction force range. The calculation of the design stress range in the stirrup or yoke need not consider the effects of stresses in the centerbeam. The effects of horizontal loads may be neglected in the fatigue limit state design of the stirrup.
- Welded Multiple-Support-Bar Systems
  - Centerbeam Weld Toe Cracking, i.e., Type A Cracking: The design stress range, Δf, for Type A cracking shall include the concurrent effects of vertical and horizontal bending stress ranges in the centerbeam, S_{RB}, and the vertical stress ranges in the top of the weld, S_{RZ}, as shown in Figure 1. The design stress range for Type A cracking shall be determined as:

$$\Delta f = \sqrt{S_{RB}^{\ 2} + S_{RZ}^{\ 2}} \qquad (14.5.6.9.7b\text{-}1)$$

in which:

$$S_{RB} = \frac{M_V}{S_{ncb}} + \frac{M_H}{S_{Tcb}} \qquad (14.5.6.9.7b\text{-}2)$$

$$S_{RZ} = \frac{M_{OT}}{S_{Wtop}} + \frac{R_V}{A_{Wtop}} \qquad (14.5.6.9.7b\text{-}3)$$

$$M_{OT} = R_H d_{cb} \qquad (14.5.6.9.7b\text{-}4)$$

asymmetric loading could significantly affect the stress range at fatigue sensitive details, either favorably or adversely. Nevertheless, a skewed centerbeam span is subjected to a range of moments that includes the negative moment from the wheel in the adjoining span, followed or preceded by the positive moment from the wheel in the span.

The stress states at the potential crack locations in these connections are multiaxial and very complicated. Simplified assumptions are used to derive the design stress range at the details of interest for common types of MBJS. Experience has shown that these simplified assumptions are sufficient provided that the same assumptions are applied in calculating the applied stress range for plotting the fatigue test data from which the design detail category was determined.

The design stress range should be estimated at a critical section at the weld toe. For example, Figure C1 shows a typical moment diagram for the support bar showing the critical section. The support bar design bending stress range is a result of the sum of the bending moment created by the applied centerbeam reaction and the additional overturning moment developed by the horizontal force applied at the top of the centerbeam.

Figure C14.5.6.9.7b-1 Typical Moment Diagram for a Support Bar.

It is conservative to estimate the moments at the centerline of the centerbeam as shown.

For all details except the welded-multiple-support-bar centerbeam to support bar connection, the design stress range can be calculated using the design moment at the location of interest. Special equations for calculating the stress range are provided for welded multiple-support-bar MBJS. These special equations are based on cracking that has been observed in fatigue tests of welded multiple-support-bar MBJS. For the case of welded multiple-support bar centerbeam to support bar connections, the design stress range is obtained by taking the square root of the sum of the squares of the horizontal stress ranges in the centerbeam or support bar and vertical stress ranges in the weld. Note this method of combining the stresses ignores the contribution of shear stresses in the region. Shear stresses are ignored in this procedure since they are typically small and very difficult to determine accurately. More details are provided in Dexter et al. (*1997*).

S_{RB} = combined bending stress range in the centerbeam (ksi)

M_V = vertical bending moment range in the centerbeam on the critical section located at the weld toe due to the vertical force range (kip-in.)

M_H = horizontal bending moment range in the centerbeam on the critical section located at the weld toe due to horizontal force range (kip-in.)

M_{OT} = overturning moment range from horizontal reaction force (kip-in.)

S_{Xcb} = vertical section modulus to the bottom of the centerbeam (in.^{3})

S_{Ycb} = horizontal section modulus of the centerbeam (in.^{3})

S_{RZ} = vertical stress range in the top of the centerbeam-to-support-bar weld from the concurrent reaction of the support beam (ksi)

R_V = vertical reaction force range in the connection (kip)

R_H = horizontal reaction force range in the connection (kip)

d_{cb} = depth of the centerbeam (in.)

S_{Wtop} = section modulus of the weld at the top for bending in the direction normal to the centerbeam axis (in.^{3})

A_{Wtop} = area of weld at the top (in.^{2})

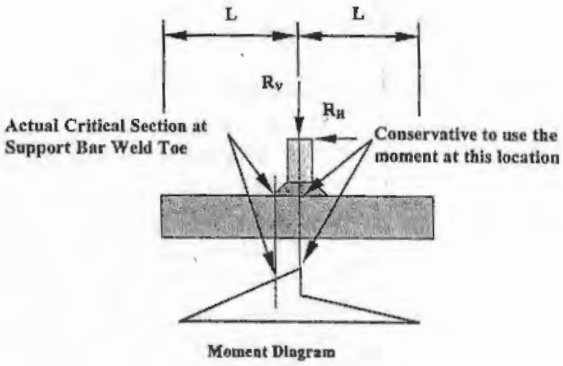

Figure C14.5.6.9.7b-1 Typical Moment Diagram for a Support Bar.

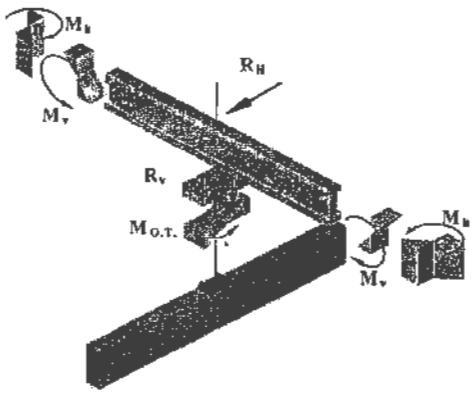

Figure 14.5.6.9.7b-1 Force Effects Associated with Type A Cracking.

- Support Bar Weld Toe Cracking, i.e., Type B Cracking: The design stress range, Δf, for Type B cracking shall include the concurrent effects of vertical bending stress ranges in the support bar, S_{RB}, and the vertical stress ranges in bottom of the weld, S_{RZ}, as shown in Figure 2. The design stress range, Δf, for Type B cracking shall be determined as:

$$\Delta f = \sqrt{S_{RB}^{\ 2} + S_{RZ}^{\ 2}} \qquad (14.5.6.9.7b\text{-}5)$$

in which:

$$S_{RB} = \frac{M_V}{S_{Xsb}} + \frac{1}{2}\frac{R_H\left(d_{cb} + h_w + \frac{1}{2}d_{sb}\right)}{S_{Xsb}} \qquad (14.5.6.9.7b\text{-}6)$$

$$S_{RZ} = \frac{R_H\left(d_{cb} + h_w\right)}{S_{Wbot}} + \frac{R_V}{A_{Wbot}} \qquad (14.5.6.9.7b\text{-}7)$$

where:

S_{RB} = bending stress range in the support bar due to maximum moment including moment from vertical reaction and overturning at the connection (ksi)

M_V = component of vertical bending moment range in the support bar due to the vertical reaction force range in the connection located on the critical section at the weld toe (kip-in.)

S_{Xsb} = vertical section modulus of the support bar to the top of the support bar (in.^{3})

h_w = height of the weld (in.)

d_{sb} = depth of the support bar (in.)

S_{RZ} = vertical stress range in the bottom of the centerbeam-to-support-bar weld from the vertical and horizontal reaction force ranges in the connection (ksi)

S_{Wbo} = section modulus of the weld at the bottom for bending in the direction of the support bar axis (in.^{3})

A_{Wbot} = area of weld at the bottom (in.^{2})

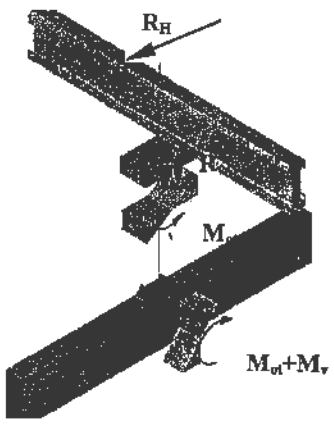

Figure 14.5.6.9.7b-2 Force Effects Associated with Type B Cracking.

- Cracking Through the Throat of the Weld, i.e., Type C Cracking: The design stress range, Δf, for Type C cracking is the vertical stress, range, S_{RZ}, at the most narrow cross-section of the centerbeam-to-support-bar weld from the vertical and horizontal reaction force ranges in the connection, as shown in Figure 3. The design stress range, Δf, for Type C cracking shall be determined as:

$$\Delta f = \frac{R_V}{A_{Wmid}} + \frac{R_H\left(d_{cb} + \frac{1}{2}h_w\right)}{S_{Wmid}} \qquad (14.5.6.9.7b\text{-}8)$$

where:

S_{Wmid} = section modulus of the weld at the most narrow cross-section for bending in the direction normal to the centerbeam axis (in.^{3})

A_{Wmid} = minimum cross-sectional area of weld (in.^{2})

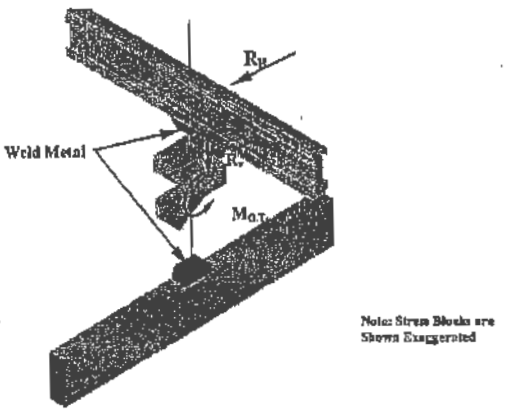

Figure 14.5.6.9.7b-3 Force Effects Associated with Type C Cracking.

14.6 REQUIREMENTS FOR BEARINGS

14.6.1 General

Bearings may be fixed or movable as required for the bridge design. Movable bearings may include guides to control the direction of translation. Fixed and guided bearings shall be designed to resist all appropriate loads and restrain unwanted translation.

Unless otherwise noted, the resistance factor for bearings, ϕ, shall be taken as 1.0.

Bearings subject to net uplift at any limit state shall be secured by tie-downs or anchorages.

The magnitude and direction of movements and the loads to be used in the design of the bearing shall be clearly defined in the contract documents.

Combinations of different types of fixed or movable bearings should not be used at the same expansion joint, bent, or pier, unless the effects of differing deflection and rotation characteristics on the bearings and the structure are accounted for in the design.

Multirotational bearings conforming to the provisions of this Section should not be used where vertical loads are less than 20 percent of the vertical bearing capacity.

All bearings shall be evaluated for component and connection strength and bearing stability.

Where two bearings are used at a support of box girders, the vertical reactions should be computed with consideration of torque resisted by the pair of bearings.

C14.6.1

Bearings support relatively large loads while accommodating large translation or rotations.

The behavior of bearings is quite variable, and there is very little experimental evidence to precisely define ϕ for each limit state. ϕ is taken to be equal to 1.0 in many parts of Article 14.6 where a more refined estimate is not warranted. The resistance factors are often embedded in the design equations and based on judgment and experience, but they are generally thought to be conservative.

Differing deflection and rotational characteristics may result in damage to the bearings and/or structure.

Bearings loaded to less than 20 percent of their vertical capacity require special design (*FHWA, 1991*).

Bearings can provide a certain degree of horizontal load resistance by limiting the radius of the spherical surface. However, the ability to resist horizontal loads is a function of the vertical reaction on the bearing, which could drop during earthquakes or other extreme event loadings. In general, bearings are not recommended for horizontal to vertical load ratios of over 40 percent unless the bearings are intended to act as fuses or irreparable damage is permitted.

14.6.2 Characteristics

The bearing chosen for a particular application shall have appropriate load and movement capabilities. Table 1 and Figure 1 may be used as a guide when comparing the different bearing systems.

The following terminology shall apply to Table 1:

S = Suitable

U = Unsuitable

L = Suitable for limited applications

R = May be suitable, but requires special considerations or additional elements such as sliders or guideways

Long. = Longitudinal axis

Trans. = Transverse axis

Vert. = Vertical axis

C14.6.2

Practical bearings will often combine more than one function to achieve the desired results. For example, a pot bearing may be combined with a PTFE sliding surface to permit translation and rotation.

Information in Table 1 is based on general judgment and observation, and there will obviously be some exceptions. Bearings listed as suitable for a specific application are likely to be suitable with little or no effort on the part of the Engineer other than good design and detailing practice. Bearings listed as unsuitable are likely to be marginal, even if the Engineer makes extraordinary efforts to make the bearing work properly. Bearings listed as suitable for limited application may work if the load and rotation requirements are not excessive.

All bearing types are shown for completeness, although all bearing types may not be permitted by all Owners.

Table 14.6.2-1 Bearing Suitability.

Type of Bearing	Movement		Rotation about Bridge Axis Indicated			Resistance to Loads		
	Long.	Trans.	Long.	Trans.	Vert.	Long.	Trans.	Vert.
Plain Elastomeric Pad	S	S	S	S	L	L	L	L
Fiberglass-Reinforced Pad	S	S	S	S	L	L	L	L
Cotton-Duck-Reinforced Pad	U	U	U	U	U	L	L	S
Steel-Reinforced Elastomeric Bearing	S	S	S	S	L	L	L	S
Plane Sliding Bearing	S	S	U	U	S	R	R	S
Curved Sliding Spherical Bearing	R	R	S	S	S	R	R	S
Curved Sliding Cylindrical Bearing	R	R	U	S	U	R	R	S
Disc Bearing	R	R	S	S	L	S	S	S
Double Cylindrical Bearing	R	R	S	S	U	R	R	S
Pot Bearing	R	R	S	S	L	S	S	S
Rocker Bearing	S	U	U	S	U	R	R	S
Knuckle Pinned Bearing	U	U	U	S	U	S	R	S
Single Roller Bearing	S	U	U	S	U	U	R	S
Multiple Roller Bearing	S	U	U	U	U	U	U	S

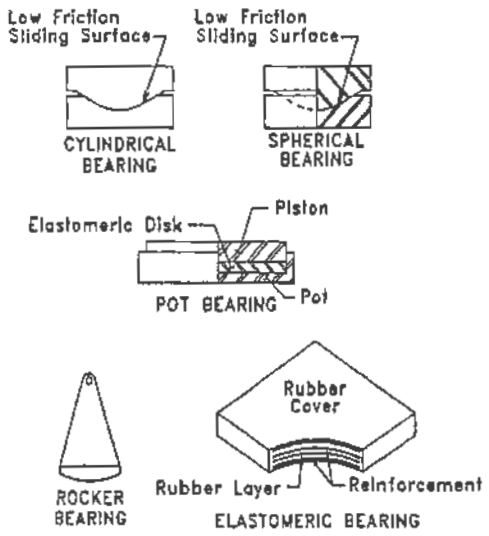

Figure 14.6.2-1 Common Bearing Types.

14.6.3 Force Effects Resulting from Restraint of Movement at the Bearing

14.6.3.1 Horizontal Force and Movement

Horizontal forces and moments induced in the bridge by restraint of movement at the bearings shall be determined using the movements and bearing characteristics specified in Article 14.7. For bearings with elastomeric elements, these characteristics should include, but are not limited to, the consideration of increased shear modulus, *G*, at temperatures below 73°F.

Expansion bearings and their supports shall be designed in a manner such that the structure can undergo movements to accommodate the seismic and other extreme event displacement determined using the provisions in Section 3 without collapse. Adequate support length shall be provided for all bearings in accordance with Article 4.7.4.4.

The Engineer shall determine the number of bearings required to resist the loads specified in Section 3 with consideration of the potential for unequal participation due to tolerances, unintended misalignments, the capacity of the individual bearings, and the skew.

Consideration should be given to the use of field adjustable elements to provide near simultaneous engagement of the intended number of bearings.

C14.6.3.1

Restraint of movement results in a corresponding force or moment in the structure. These force effects should be calculated taking into account the stiffness of the bridge and the bearings. The latter should be estimated by the methods outlined in Article 14.7. In some cases, the bearing stiffness depends on time and temperature, as well as on the movement. For example, the designer should take note that in cold temperatures which approach the appropriate minimum specified zone temperatures, the shear modulus, *G*, of an elastomer may be as much as four times that at 73°F. See Article 14.7.5.2 and AASHTO M 251 for more information.

Expansion bearings should allow sufficient movement in their unrestrained direction to prevent premature failure due to seismic and other extreme event displacements.

Often, bearings do not resist load simultaneously, and damage to only some of the bearings at one end of a span is not uncommon. When this occurs, high load concentrations can result at the location of the undamaged bearings, which should be taken into account. The number of bearings engaged should be based on type, design, and detailing of the bearings used, and on the bridge skew. Skew angles under 15° are usually ignored. Skew angles over 30° are usually considered significant and need to be considered in analysis. Skewed bridges have a tendency to rotate under seismic loading, and bearings should be designed and detailed to accommodate this effect.

At the strength and extreme event limit states, horizontal forces transmitted to the superstructure and substructure by bearings, H_{bu}, shall be taken as those induced by sliding friction, rolling friction, or shear deformation of a flexible element in the bearing.

Sliding friction force shall be taken as:

$$H_{bu} = \mu P_u \qquad (14.6.3.1\text{-}1)$$

where:

H_{bu} = lateral load transmitted to the superstructure and substructure by bearings from applicable strength and extreme event load combinations in Table 3.4.1-1 (kip)

μ = coefficient of friction

P_u = compressive force from applicable strength and extreme event load combinations in Table 3.4.1-1 (kip)

The force due to the deformation of an elastomeric element shall be taken as:

$$H_{bu} = GA\frac{\Delta_u}{h_{rt}} \qquad (14.6.3.1\text{-}2)$$

where:

G = shear modulus of the elastomer (ksi)

A = plan area of elastomeric element or bearing (in.^{2})

Δ_u = shear deformation from applicable strength and extreme event load combinations in Table 3.4.1-1 (in.)

h_{rt} = total elastomer thickness (in.)

Strength and extreme event limit states rolling forces shall be determined by testing.

Horizontal forces transmitted to other bridge elements by bearings do not include forces associated with the deformations of stiff bearing elements or hard metal-on-metal contact of bearing components because provisions in Article 14.7 are intended to avoid such contact.

Maximum extreme event limit state forces should be considered when the bearing is not intended to act as a fuse or irreparable damage is not permitted.

Special consideration should be given to bearings that support large horizontal loads relative to the vertical load (*SCEF, 1991*).

Eq. 1 is a function of vertical forces and friction, and is a measure of the maximum horizontal force which could be transmitted to the superstructure or substructure before slip occurs. Eq. 2 is also a measure of the maximum transmitted horizontal force, but is dependant primarily upon the shear modulus (stiffness) of the elastomer and applied lateral forces such as braking.

14.6.3.2 Moment

At the strength and extreme event limit states, both the substructure and superstructure shall be designed for the largest moment, M_u, transferred by the bearing.

For curved sliding bearings without a companion flat sliding surface, M_u shall be taken as:

$$M_u = \mu P_u R \qquad (14.6.3.2\text{-}1)$$

For curved sliding bearings with a companion flat sliding surface, M_u shall be taken as:

$$M_u = 2\mu P_u R \qquad (14.6.3.2\text{-}2)$$

C14.6.3.2

Maximum extreme event limit state forces should be considered when the bearing is not intended to act as a fuse or irreparable damage is not permitted.

The tangential force in curved sliding bearings is caused by friction resistance at the curved surface, and it acts about the center of the curved surface. M_u is the moment due to this force that is transmitted by the bearing. The moment imposed on individual components of the bridge structure may be different from M_u depending on the location of the axis of rotation and can be calculated by a rational method.

where:

M_u = moment transmitted to the superstructure and substructure by bearings from applicable strength and extreme event load combinations in Table 3.4.1-1 (kip-in.)

R = radius of curved sliding surface (in.)

For unconfined elastomeric bearings and pads, M_u shall be taken as:

$$M_u = 1.60(0.5E_c I)\frac{\theta_s}{h_{rt}} \qquad (14.6.3.2\text{-}3)$$

where:

I = moment of inertia of plan shape of bearing (in.^{4})

E_c = effective modulus of elastomeric bearing in compression (ksi)

θ_s = maximum service limit state design rotation angle specified in Article 14.4.2.1 (rad.)

h_{rt} = total elastomer thickness (in.)

For CDP, M_u shall be taken as:

$$M_u = 1.25\left(4.5 - 2.2S + 0.6\sigma_s\right)\frac{E_c I}{t_p}\theta_s \qquad (14.6.3.2\text{-}4)$$

where:

E_c = uniaxial compressive stiffness of the CDP bearing pad. It may be taken as 30 ksi in lieu of pad-specific test data (ksi)

t_p = total thickness of CDP pad (in.)

S = shape factor of the CDP pad computed based on Eq. 14.7.5.1-1 and based on total pad thickness

σ_s = average compressive stress due to total load associated with the maximum rotation from applicable service load combinations in Table 3.4.1-1 (ksi)

θ_s = maximum rotation of the CDP pad from applicable service load combinations in Table 3.4.1-1 (rad.)

The load-deflection curve of an elastomeric bearing is nonlinear, so E_c is load dependent. One acceptable approximation for the effective modulus is:

$$E_c = 6GS^2 \qquad (C14.6.3.2\text{-}1)$$

where:

S = shape factor of an individual elastomer layer

G = shear modulus of the elastomer (ksi)

The factor 1.60 in Eq. 3 is an average multiplier on total load on the bearing to estimate a strength limit state load, M_u, based on a service limit state rotation, θ_s.

The factor 1.25 in Eq. 4 is a multiplier on total load on the bearing to estimate a strength limit state load, M_u, based on a service limit state rotation, θ_s, and stress, σ_s.

The rotational stiffness, K, of CDP is provided by:

$$K = \left(4.5 - 2.2S + 0.6\sigma_s\right)\frac{E_c I}{t_p} \qquad (C14.6.3.2\text{-}2)$$

The moment, M_u, may be crucial for the design of CDP, because movable CDP are normally designed with PTFE sliding surfaces to develop the translational movement capacity. M_u in the bearing pad results in edge bearing stress on the PTFE in addition to the average compressive stress. The PTFE on CDP pads is unconfined, and this moment may limit the bearing stress on the PTFE to a stress somewhat smaller than permitted on the CDP alone.

14.6.4 Fabrication, Installation, Testing, and Shipping

The provisions for fabrication, installation, testing, and shipping of bearings, specified in Section 18, "Bearing Devices," of the *AASHTO LRFD Bridge Construction Specifications*, shall apply.

The setting temperature of the bridge or any component thereof shall be taken as the actual air temperature averaged over the 24-hour period immediately preceding the setting event.

C14.6.4

Some jurisdictions have provided additional guidance beyond that provided in the *AASHTO LRFD Bridge Construction Specifications* with respect to the fabrication, installation, testing, and shipping of multirotational-type bearings (*SCEF, 1991*).

Setting temperature is used in installing expansion bearings.

An offset chart for girder erection and alignment of the bearings is recommended to account for uncertainty in the setting temperature at the time of design. Offset charts should be defined in appropriate increments and included in the design drawings so that the position of the bearing can be adjusted to account for differences between setting temperature and an assumed design installation temperature.

14.6.5 Seismic and Other Extreme Event Provisions for Bearings

14.6.5.1 General

This Article shall apply to the analysis, design and detailing of bearings to accommodate the effects of earthquakes and, as appropriate, other extreme events for which the horizontal loading component is very large.

These provisions shall be applied in addition to all other applicable code requirements. The bearing-type selection shall consider the criteria described in Article 14.6.5.3 in the early stages of design.

C14.6.5.1

Extreme events other than earthquakes for which the horizontal loading component is very large include vehicle collisions, ship collisions, and high-velocity winds.

14.6.5.2 Applicability

These provisions shall apply to pin, roller, rocker, and bronze or copper-alloy sliding bearings, elastomeric bearings, spherical bearings, and pot and disc bearings in common slab-on-girder bridges but not to isolation-type bearings or structural fuse bearings designed primarily for the effects of extreme event dynamic horizontal loadings.

Although the strategy taken herein assumes that inelastic action is confined to properly detailed hinge areas in substructures, alternative concepts that utilize movement at the bearings to dissipate extreme event horizontal and/or vertical forces may also be considered. Where alternate strategies may be used, all ramifications of the increased movements and the predictability of the associated forces and transfer of forces shall be considered in the design and details.

C14.6.5.2

Provisions for the design, specification, testing, and acceptance of isolation bearings are given in AASHTO (*1999*).

14.6.5.3 Design Criteria

The selection and the seismic or other extreme event horizontal loading design of bearings shall be related to the strength and stiffness characteristics of both the superstructure and the substructure.

Bearing design shall be consistent with the intended seismic or other extreme event response of the whole bridge system.

Where rigid-type bearings are used, the seismic or other horizontal extreme event forces from the superstructure shall be assumed to be transmitted through diaphragms or cross-frames and their connections to the bearings and then to the substructure without reduction due to local inelastic action along that load path. However, forces may be reduced in situations where the end-diaphragms in the superstructure have been specifically designed and detailed for inelastic action, in accordance with generally accepted provisions for ductile end-diaphragms.

As a minimum, bearings, restraints, and anchorages shall be designed to resist the forces specified in Article 3.10.9.

C14.6.5.3

The commentary provided below specifically addresses seismic design considerations. However, it is also applicable to other extreme event horizontal loadings such as vehicle and ship collisions which are dynamic in nature but can have a very short duration. Other extreme events such as wind or waves may require special considerations that are not fully addressed in these specifications for bearing design.

Bearings have a significant effect on the overall seismic response of a bridge. They provide the seismic load transfer link between a stiff and massive superstructure and a stiff and massive substructure. As a result, very high (and difficult-to-predict) load concentrations can occur in the bearing components. The primary functions of the bearings are to resist the vertical loads due to dead load and live load and to allow for superstructure movements due to live load and temperature changes. Allowance for translation is made by means of rollers, rocker, or shear deformation of an elastomer, or through the provision of a sliding surface of bronze or copper alloy or PTFE. Allowance for rotation is made by hinges, confined or unconfined elastomers, or spherical sliding surfaces. Resistance to translation is provided by bearing components or additional restraining elements.

Historically, bearings have been very susceptible to seismic loads. Unequal loading during seismic events and much higher loads than anticipated have caused various types and levels of bearing damage. To allow movements, bearings often contain elements vulnerable to high loads and impacts.

The performance of bearings during past earthquakes needs to be evaluated in context with the overall performance of the bridge and the performance of the superstructure and substructure elements connected to the bearings. Rigid bearings have been associated with damage to the end cross-frames and the supporting pier or abutment concrete. In some cases, bearing damage and slippage has prevented more extensive damage.

The criteria for seismic design of bearings should consider the strength and stiffness characteristics of the superstructure and substructure. To minimize damage, the seismic load resisting system made of the end cross-frame or diaphragms, bearings, and substructure should allow a certain degree of energy dissipation, movement, or plastic deformation even if those effects are not quantified as they would be for seismic isolation bearings or structural fuses.

Based on their horizontal stiffness, bearings may be divided into four categories:

- Rigid bearings that transmit seismic loads without any movement or deformations;

- Deformable bearings that transmit seismic loads limited by plastic deformations or restricted slippage of bearing components;
- Seismic isolation type bearings that transmit reduced seismic loads, limited by energy dissipation; and,
- Structural fuses that are designed to fail at a prescribed load.

For the deformable-type bearing, limited and reparable bearing damage and displacement may be allowed for the design earthquake.

When both the superstructure and the substructure components adjacent to the bearing are very stiff, a deformable-type bearing should be considered.

Seismic isolation-type bearings are not within the scope of these provisions, but they should also be considered.

Elastomeric bearings having less than full rigidity, but not designed explicitly as seismic isolators or fuses, may be used under any circumstance. If used, they shall either be designed to accommodate imposed seismic or other horizontal extreme event loads, or, if survival of the elastomeric bearing itself is not required, other means such as restrainers, STUs, widened support lengths, or dampers shall be provided to prevent unseating of the superstructure.

Elastomeric bearings have been demonstrated to result in reduced force transmission to substructure.

A bearing may also be designed to act as a "structural fuse" that will fail at a predetermined load changing the articulation of the structure, possibly changing its period and hence seismic response, and probably resulting in increased movements. This strategy is permitted as an alternative to these provisions under Article 14.6.5.2. Such an alternative would require full consideration of forces and movements and of bearing repair/replacement details. It also requires the designer to address the inherent difficulty of detailing a structural element to fail reliably at predetermined load.

14.7 SPECIAL DESIGN PROVISIONS FOR BEARINGS

14.7.1 Metal Rocker and Roller Bearings

14.7.1.1 General

The rotation axis of the bearing shall be aligned with the axis about which the largest rotations of the supported member occur. Provision shall be made to ensure that the bearing alignment does not change during the life of the bridge. Multiple roller bearings shall be connected by gearing to ensure that individual rollers remain parallel to each other and at their original spacing.

Metal rocker and roller bearings shall be detailed so that they can be easily inspected and maintained.

C14.7.1.1

Cylindrical bearings contain no deformable parts and are susceptible to damage if the superstructure rotates about an axis perpendicular to the axis of the bearing. Thus, they are unsuitable for bridges in which the axis of rotation may vary significantly under different situations, such as bridges with a large skew. They are also unsuitable for use in seismic regions because the transverse shear caused by earthquake loading can cause substantial overturning moment.

Rockers should be avoided wherever practical and, when used, their movements and teodency to tip under seismic actions shall be considered in the design and details.

Good maintenance is essential if mechanical bearings are to perform properly. Dirt attracts and holds moisture, which, combined with high local contact stresses, can promote stress corrosion. Metal bearings, in particular, must be designed for easy maintenance.

Rockers can be suitable for applications in which the horizontal movement of the superstructure, relative to the substructure, is well within the available movement range after consideration of other applicable movements.

14.7.1.2 Materials

Rocker and roller bearings shall be made of stainless steel conforming to ASTM A 240, as specified in Article 6.4.7, or of structural steel conforming to AASHTO M 169 (ASTM A 108), M 102 (ASTM A 668), or M 270 (ASTM A 709), Grades 36, 50, or 50W. Material properties of these steels shall be taken as specified in Table 6.4.1-1 and Table 6.4.2-1.

C14.7.1.2

Carbon steel has been the traditional steel used in mechanical bearings because of its good mechanical properties. Surface hardening may be considered. Corrosion resistance is also important. The use of stainless steel for the contact surfaces may prove economical when life-cycle costs are considered. Weathering steels should be used with caution as their resistance to corrosion is often significantly reduced by mechanical wear at the surface.

14.7.1.3 Geometric Requirements

The dimensions of the bearing shall be chosen taking into account both the contact stresses and the movement of the contact point due to rolling.

Each individual curved contact surface shall have a constant radius. Bearings with more than one curved surface shall be symmetric about a line joining the centers of their two curved surfaces.

If pintles or gear mechanisms are used to guide the bearing, their geometry should be such as to permit free movement of the bearing.

Bearings shall be designed to be stable. If the bearing has two separate cylindrical faces, each of which rolls on a flat plate, stability may be achieved by making the distance between the two contact lines no greater than the sum of the radii of the two cylindrical surfaces.

C14.7.1.3

The choice of radius for a curved surface is a compromise: a large radius results in low contact stresses but large rotations of the point of contact and vice versa. The latter could be important if, for example, a rotational bearing is surmounted by a PTFE slider because the PTFE is sensitive to eccentric loading.

A cylindrical roller is in neutral equilibrium. The provisions for bearings with two curved surfaces achieves at least neutral, if not stable, equilibrium.

14.7.1.4 Contact Stresses

At the service limit state, the contact load, P_S, shall satisfy:

- For cylindrical surfaces:

$$P_S \le 8\frac{WD_1}{\left(1-\frac{D_1}{D_2}\right)}\left(\frac{F_y^2}{E_s}\right) \qquad (14.7.1.4\text{-}1)$$

- For spherical surfaces:

C14.7.1.4

The service limit state loads are limited so that the contact causes calculated shear stresses no higher than 0.55 F_y or surface compression stresses no higher than 1.65 F_y. The maximum compressive stress is at the surface, and the maximum shear stress occurs just below it.

The formulas were derived from the theoretical value for contact stress between elastic bodies (*Roark and Young, 1976*). They are based on the assumption that the width of the contact area is much less than the diameter of the curved surface.

If two surfaces have curves of the opposite sign, the value of D_2 is negative. This would be an unusual situation in bridge bearings.

$$P_s \le 40\left(\frac{D_1}{1-\frac{D_1}{D_2}}\right)^2 \frac{F_y^3}{E_s^2} \qquad (14.7.1.4\text{-}2)$$

where:

D_1 = the diameter of the rocker or roller surface (in.)

D_2 = diameter of the mating surface (in.) taken as:

- Positive if the curvatures have the same sign, and
- Infinite if the mating surface is flat.

F_y = specified minimum yield strength of the weakest steel at the contact surface (ksi)

E_s = Young's modulus for steel (ksi)

W = width of the bearing (in.)

Eqs. 1 and 2 are more restrictive than similar provisions for line bearing and contact stresses in the AASHTO Standard Specifications. The more conservative design was adopted herein due to the problematic history of some bearings which, in some cases, may be related to small zones of yielding in the bearing or base plate. The increased conservatism is not difficult to handle in new design, but may be a problem in rehabilitation. If careful inspection indicates that existing bearings which do not satisfy these provisions are performing well and there is no evidence of rutting or ridging, which may be evidence of local yielding, then reuse of the bearing may be viable. Evaluation may proceed using the following historical provision:

Bearing per linear in. on expansion rockers and rollers at the service limit state shall not exceed the values obtained by the following formulas:

Diameters up to 25.0 in.

$$p = \frac{F_y - 13}{20}(0.6d) \qquad (C14.7.1.4\text{-}1)$$

Diameters 25.0 to 125.0 in.

$$p = \frac{F_y - 13}{20}3\sqrt{d} \qquad (C14.7.1.4\text{-}2)$$

where:

p = allowable bearing at the service limit state (kip/in.)

d = diameter of rocker or roller (in.)

F_y = specified minimum yield strength of the weakest steel at the contact surface (ksi)

If loads are increased significantly by the rehabilitation, complying with the current provisions may be more appropriate.

The two diameters have the same sign if the centers of the two curved surfaces in contact are on the same side of the contact surface, such as is the case when a circular shaft fits in a circular hole.

14.7.2 PTFE Sliding Surfaces

PTFE may be used in sliding surfaces of bridge bearings to accommodate translation or rotation. All PTFE surfaces other than guides shall satisfy the requirements specified herein. Curved PTFE surfaces shall also satisfy Article 14.7.3.

14.7.2.1 PTFE Surface

The PTFE surface shall be made from pure virgin PTFE resin satisfying the requirements of ASTM D 4894 or D 4895. It shall be fabricated as unfilled sheet, filled sheet, or fabric woven from PTFE and other fibers.

Unfilled sheets shall be made from PTFE resin alone. Filled sheets shall be made from PTFE resin uniformly blended with glass fibers, carbon fibers, or other chemically inert filler. The filler content shall not exceed 15 percent for glass fibers and 25 percent for carbon fibers.

Sheet PTFE may contain dimples to act as reservoirs for lubricant. Unlubricated PTFE may also contain dimples. Their diameter shall not exceed 0.32 in. at the surface of the PTFE, and their depth shall be not less than 0.08 in. and not more than half the thickness of the PTFE. The reservoirs shall be uniformly distributed over the surface area and shall cover more than 20 percent but less than 30 percent of the contact surface. Dimples should not be placed to intersect the edge of the contact area. Lubricant shall be silicone grease, which satisfies Military Specification MIL-S-8660.

Woven fiber PTFE shall be made from pure PTFE fibers. Reinforced woven fiber PTFE shall be made by interweaving high-strength fibers, such as glass, with the PTFE in such a way that the reinforcing fibers do not appear on the sliding face of the finished fabric.

14.7.2.2 Mating Surface

The PTFE shall be used in conjunction with a mating surface. Flat mating surfaces shall be stainless steel, and curved mating surfaces shall be stainless steel or anodized aluminum. Flat surfaces shall be stainless steel, Type 304, conforming to ASTM A 167/A 264, and shall be provided with a surface finish of 8.0 μ-in. RMS or better. Finishes on curved metallic surfaces shall not exceed 16.0 μ-in. RMS. The mating surface shall be large enough to cover the PTFE at all times.

C14.7.2

PTFE, is also known as TFE and is commonly used in bridge bearings in the United States. This Article does not cover guides. The friction requirements for guides are less stringent, and a wider variety of materials and fabrication methods can be used for them.

C14.7.2.1

PTFE may be provided in sheets or in mats woven from fibers. The sheets may be filled with reinforcing fibers to reduce creep, i.e., cold flow, and wear, or they may be made from pure resin. The friction coefficient depends on many factors, such as sliding speed, contact pressure, lubrication, temperature, and properties such as the finish of the mating surface (*Campbell and Kong, 1987*). The material properties that influence the friction coefficient are not well understood, but the crystalline structure of the PTFE is known to be important, and it is strongly affected by the quality control exercised during the manufacturing process.

Unfilled dimples can act as reservoirs for contaminants (dust, etc.) which can help to keep these contaminants from the contact surface.

C14.7.2.2

Stainless steel is the most commonly used mating surface for PTFE sliding surfaces. Anodized aluminum has been sometimes used in spherical and cylindrical bearings produced in other countries and may be considered if documentation of experience, acceptable to the Owner, is provided. The finish of this mating surface is extremely important because it affects the coefficient of friction. ASTM A 240, Type 304, stainless steel, with a surface finish of 16.0 μ-in. RMS or better, is appropriate, but the surface measurements are inherently inexact, and hence it is not a specified alternative. Friction testing is required for the PTFE and its mating surface because of the many variables involved.

14.7.2.3 Minimum Thickness

14.7.2.3.1 PTFE

For all applications, the thickness of the PTFE shall be at least 0.0625 in. after compression. Recessed sheet PTFE shall be at least 0.1875 in. thick when the maximum dimension of the PTFE is less than or equal to 24.0 in., and 0.25 in. when the maximum dimension of the PTFE is greater than 24.0 in. Woven fabric PTFE, which is mechanically interlocked over a metallic substrate, shall have a minimum thickness of 0.0625 in. and a maximum thickness of 0.125 in. over the highest point of the substrate.

C14.7.2.3.1

A minimum thickness is specified to ensure uniform bearing and to allow for wear.

During the first few cycles of movement, small amounts of PTFE transfer to the mating surface and contribute to the very low friction achieved subsequently. This wear is acceptable and desirable.

PTFE continues to wear with time (*Campbell and Kong, 1987*) and movement; wear is exacerbated by deteriorated or rough surfaces. Wear is undesirable because it usually causes higher friction and reduces the thickness of the remaining PTFE. Unlubricated, flat PTFE wears more severely than the lubricated material. The evidence on the rate of wear is tentative. High travel speeds, such as those associated with traffic movements, appear to be more damaging than the slow ones due to thermal movements. However, they may be avoided by placing the sliding surface on an elastomeric bearing that will absorb small longitudinal movements. No further allowance for wear is made in this Specification due to the limited research available to quantify or estimate the wear as a function of time and travel. However, wear may ultimately cause the need for replacement of the PTFE, so it is wise to allow for future replacement in the original design.

14.7.2.3.2 Stainless Steel Mating Surfaces

The thickness of the stainless steel mating surface shall be at least 16 gage when the maximum dimension of the surface is less than or equal to 12.0 in. and at least 13 gage when the maximum dimension is larger than 12.0 in.

Backing plate requirements shall be taken as specified in Article 14.7.2.6.2.

C14.7.2.3.2

The minimum thickness requirements for the mating surface are intended to prevent it from wrinkling or buckling. This surface material is usually quite thin to minimize cost of the highly finished mating surface. Some mating surfaces, particularly those with curved surfaces, are made of carbon steel on which a stainless steel weld is deposited. This welded surface is then finished and polished to achieve the desired finish. Some jurisdictions require a minimum thickness of 0.094 in. for welded overlay after grinding and polishing.

14.7.2.4 Contact Pressure

The contact stress between the PTFE and the mating surface shall be determined at the service limit state using the nominal area.

The average contact stress shall be computed by dividing the load by the projection of the contact area on a plane perpendicular to the direction of the load. The contact stress at the edge shall be determined by taking into account the maximum moment transferred by the bearing assuming a linear distribution of stress across the PTFE.

Stresses shall not exceed those given in Table 1. Permissible stresses for intermediate filler contents shall be obtained by linear interpolation within Table 1.

C14.7.2.4

The average contact stress shall be determined by dividing the load by the projection of the contact area onto a plane perpendicular to the direction of the load. The edge contact stress shall be determined based on the service limit state load and the maximum service limit state moment transferred by the bearing.

The contact pressure must be limited to prevent excessive creep or plastic flow of the PTFE, which causes the PTFE disc to expand laterally under compressive stress and may contribute to separation or bond failure. The lateral expansion is controlled by recessing the PTFE into a steel plate or by reinforcing the PTFE, but there are adverse consequences associated with both methods.

Edge loading may be particularly detrimental because it causes large stress and potential flow in a local area near the edge of the material in hard contact between steel surfaces. The average and edge contact pressure in Table 1 are in appropriate proportions to one another relative to the currently available research. Better data may become available in the future. These are in the lower range of those used in Europe.

Table 14.7.2.4-1 Maximum Contact Stress for PTFE at the Service Limit State (ksi).

Material	Average Contact Stress (ksi)		Edge Contact Stress (ksi)	
	Permanent Loads	All Loads	Permanent Loads	All Loads
Unconfined PTFE:				
Unfilled Sheets	1.5	2.5	2.0	3.0
Filled Sheets with Maximum Filler Content	3.0	4.5	3.5	5.5
Confined Sheet PTFE	3.0	4.5	3.5	5.5
Woven PTFE Fiber over a Metallic Substrate	3.0	4.5	3.5	5.5
Reinforced Woven PTFE over a Metallic Substrate	4.0	5.5	4.5	7.0

14.7.2.5 Coefficient of Friction

The service limit design coefficient of friction of the PTFE sliding surface shall be taken as specified in Table 1. Intermediate values may be determined by interpolation. The coefficient of friction shall be determined by using the stress level associated with the applicable load combination specified in Table 3.4.1-1. Lesser values may be used if verified by tests.

Where friction is required to resist nonseismic loads, the design coefficient of friction under dynamic loading may be taken as not more than ten percent of the values listed in Table 1 for the bearing stress and PTFE type indicated.

The coefficients of friction in Table 1 are based on a 8.0 μ-in. finish mating surface. Coefficients of friction for rougher surface finishes must be established by test results in accordance with the *AASHTO LRFD Bridge Construction Specifications*, Chapter 18.

The contract documents shall require certification testing from the production lot of PTFE to ensure that the friction actually achieved in the bearing is appropriate for the bearing design.

C14.7.2.5

The friction factor decreases with lubrication and increasing contact stress but increases with sliding velocity (*Campbell and Kong, 1987*). The coefficient of friction also tends to increase at low temperatures. Static friction is larger than dynamic friction, and the dynamic coefficient of friction is larger for the first cycle of movement than it is for later cycles. Friction increases with increasing roughness of the mating surface and decreasing temperature. The friction factors used in the earlier editions of the AASHTO Standard Specifications are suitable for use with dimpled, lubricated PTFE. They are too small for the flat, dry PTFE commonly used in the United States. These Specifications have been changed to recognize this fact. Nearly all research to date has been performed on dimpled, lubricated PTFE. The coefficients of friction given in Table 1 are not applicable to high-velocity movements such as those occurring in seismic events. Seismic velocity coefficients of friction must be determined in accordance with the AASHTO *Guide Specifications for Seismic Isolation Design*. Coefficients of friction, somewhat smaller than those given in Table 1, are possible with care and quality control.

Certification testing from the production lot is essential for PTFE sliding surfaces primarily to ensure that the friction actually achieved in the bearing is appropriate for the bearing design. Testing is the only reliable method for certifying the coefficient of friction and bearing behavior.

Contamination of the sliding surface with dirt and dust increases the coefficient of friction and increases the wear of the PTFE. To prevent contamination, the bearing should be sealed by the manufacturer and not separated at the construction site. To prevent contamination and gouging of the PTFE, the stainless steel should normally be on top and should be larger than the PTFE, plus its maximum travel.

Woven PTFE is sometimes formed by weaving pure PTFE strands with a reinforcing material. These reinforcing strands may increase the resistance to creep and cold flow and can be woven so that reinforcing strands do not appear on the sliding surface. This separation is necessary if the coefficients of friction provided in Table 1 are to be used.

If there is no lubricant in the dimples, the dimples tend to flatten out filling the dimples, resulting in a surface much like unfilled PTFE.

Table 14.7.2.5-1 Design Coefficients of Friction—Service Limit State.

	Pressure (ksi)	Coefficient of Friction			
		0.5	1.0	2.0	>3.0
Type PTFE	Temperature (°F)				
Dimpled Lubricated	68	0.04	0.030	0.025	0.020
	−13	0.06	0.045	0.040	0.030
	−49	0.10	0.075	0.060	0.050
Unfilled or Dimpled Unlubricated	68	0.08	0.070	0.050	0.030
	−13	0.20	0.180	0.130	0.100
	−49	0.20	0.180	0.130	0.100
Filled	68	0.24	0.170	0.090	0.060
	−13	0.44	0.320	0.250	0.200
	−49	0.65	0.550	0.450	0.350
Woven	68	0.08	0.070	0.060	0.045
	−13	0.20	0.180	0.130	0.100
	−49	0.20	0.180	0.130	0.100

14.7.2.6 Attachment

14.7.2.6.1 PTFE

Sheet PTFE confined in a recess in a rigid metal backing plate for one-half its thickness may be bonded or unbonded.

Sheet PTFE that is not confined shall be bonded to a metal surface or an elastomeric layer with a Shore A durometer hardness of at least 90 by an approved method.

Woven PTFE on a metallic substrate shall be attached to the metallic substrate by mechanical interlocking that can resist a shear force no less than 0.10 times the applied compressive force.

C14.7.2.6.1

Recessing is the most effective way of preventing creep in unfilled PTFE. The PTFE discs may also be bonded into the recess, but this is optional and the benefits are debatable. Bonding helps to retain the PTFE in the recess during the service life of the bridge, but it makes replacement of the disc more difficult. If the adhesive is not applied uniformly it can cause an uneven PTFE sliding snrface that could lead to premature wear. Some mannfacturers cut the PTFE slightly oversize and pre-cool it before installation because this results in a tighter fit at room temperature.

Sometimes PTFE is bonded to the top cover layer of an elastomeric bearing. This layer should be relatively thick and hard to avoid rippling of the PTFE (*Roeder et al., 1987*). PTFE must be etched prior to epoxy bonding in order to obtain good adhesion. However, ultra-violet light attacks the etching and can lead to delamination, so PTFE exposed to ultra-violet light should not be attached by bonding alone.

14.7.2.6.2 Mating Surface

The mating surface for flat sliding surfaces shall be attached to a backing plate by welding in such a way that it remains flat and in full contact with its backing plate throughout its service life. The weld shall be detailed to form an effective moisture seal around the entire perimeter of the mating surface to prevent interface corrosion. The attachment shall be capable of resisting the maximum friction force that can be developed by the bearing under service limit state load combinations. The welds used for the attachment shall be clear of the contact and sliding area of the PTFE surface.

C14.7.2.6.2

The restrictions on the attachment of the mating surface are primarily intended to ensure that the surface is flat and retains uniform contact with the PTFE at all times, without adversely affecting the friction of the surface or gouging or cutting the PTFE.

The mating surface of curved sliding surfaces should be machined to the required surface finish from a single piece.

14.7.3 Bearings with Curved Sliding Surfaces

14.7.3.1 General

Bearings with curved sliding surfaces shall consist of two metal parts with matching curved surfaces and a low friction sliding interface. The curved surfaces may be either cylindrical or spherical. The material properties, characteristics, and frictional properties of the sliding interface shall satisfy the requirements specified in Articles 14.7.2 and 14.7.7.

The two surfaces of a sliding interface shall have equal nominal radii.

C14.7.3.1

These provisions are directed primarily toward spherical or cylindrical bearings with bronze or PTFE sliding surfaces.

Some jurisdictions require that the minimum center thickness of concave spherical surfaces be at least 0.75 in. and that a minimum vertical clearance between the rotating and nonrotating parts be as given by Eqs. C1 or C2 but not less than 0.125 in.

- For rectangular spherical or curved bearings:

$$c = 0.7D\theta_u + 0.125 \qquad \text{(C14.7.3.1-1)}$$

- For round spherical or round bearings:

$$c = 0.5D\theta_u + 0.125 \qquad \text{(C14.7.3.1-2)}$$

where:

θ_u = design rotation <u>from applicable strength load combinations in Table 3.4.1-1 or Article 4.4.2.2.1</u> (rad.)

Similarly, the minimum edge thickness on the convex surface has sometimes been limited to 0.75 in. for bearing on concrete and 0.50 in. for bearing on steel.

14.7.3.2 Bearing Resistance

The radius of the curved surface shall be large enough to ensure that the total compressive load at the service limit state on the horizontal projected area of the bearing, P_s, is less than or equal to the average allowable load as computed from the service stress specified in Articles 14.7.2.4 or 14.7.7.3.

- For cylindrical bearings:

$$P_s \le \phi D W \sigma_{SS} \qquad (14.7.3.2\text{-}1)$$

- For spherical bearings:

$$P_s \le \phi \frac{\pi D^2 \sigma_{SS}}{4} \qquad (14.7.3.2\text{-}2)$$

where:

P_s = total compressive load from applicable service load combinations in Table 3.4.1-1 (kip)

D = diameter of the projection of the loaded surface of the bearing in the horizontal plane (in.)

σ_{SS} = maximum average contact stress at the service limit state permitted on PTFE by Table 14.7.2.4-1 or on bronze by Table 14.7.7.3-1 (ksi)

W = length of cylinder (in.)

ϕ = resistance factor taken as 1.0

C14.7.3.2

The geometry of a spherical bearing controls its ability to resist lateral loads, its moment-rotation behavior, and its frictional characteristics. The geometry is relatively easy to define, but it has some consequences that are not widely appreciated. The stress may vary over the contact surface of spherical or cylindrical bearings. Cylindrical and spherical surfaces cannot be machined as accurately as a flat smooth surface. It is important that the radius of the convex and concave surfaces be within appropriate limits. If these limits are exceeded the bronze may crack due to hard bearing contact, or there may be excessive wear and damage due to creep or cold flow of the PTFE. The stress limits used in this Section are based on average contact stress levels.

14.7.3.3 Resistance to Lateral Load

Where bearings are required to resist horizontal loads at the service limit state, an external restraint system shall be provided nr:

- For a cylindrical sliding surface, the horizontal load shall satisfy:

$$H_s \le 2RW\sigma_{SS}\sin(\psi - \beta - \theta_u)\sin\beta \qquad (14.7.3.3\text{-}1)$$

C14.7.3.3

The geometry of a curved bearing combined with gravity loads can provide considerable resistance to lateral load. An external restraint is often a more reliable method of resisting large lateral loads at the service and strength limit states, and at the extreme event limit state when the bearing is not intended to act as a fuse or irreparable damage is not permitted.

The applied loads for determination of the angle β and the applied load check are at the service limit state because the stress limits, σ_{SS}, are service-based. The rotation at the strength limit state is utilized because bearings with curved sliding surfaces are susceptible to more serious consequences if overloaded or over rotated.

The geometry of a cylindrical sliding bearing is shown in the deformed position in Figure C1.

- For a spherical surface, the horizontal load shall satisfy:

$$H_s \le \pi R^2 \sigma_{SS} \sin(\psi - \beta - \theta_u) \sin\beta \quad (14.7.3.3\text{-}2)$$

in which:

$$\beta = \tan^{-1}\left(\frac{H_s}{P_D}\right) \quad (14.7.3.3\text{-}3)$$

and

$$\psi = \sin^{-1}\left(\frac{L}{2R}\right) \quad (14.7.3.3\text{-}4)$$

where:

H_s = horizontal load from applicable service load combinations in Table 3.4.1-1 (kip)

L = projected length of the sliding surface perpendicular to the rotation axis (in.)

P_D = compressive load at the service limit state (load factor = 1.0) due to permanent loads (kip)

R = radius of the curved sliding surface (in.)

W = length of the cylindrical surface (in.)

β = angle between the vertical and resultant applied load (rad.)

θ_u = maximum strength limit state design rotation angle specified in Article 14.4.2.2.1 (rad.)

σ_{SS} = maximum average contact stress at the service limit state permitted on PTFE by Table 14.7.2.4-1 or on bronze by Table 14.7.7.3-1 (ksi)

Ψ = subtended semiangle of the curved surface (rad.)

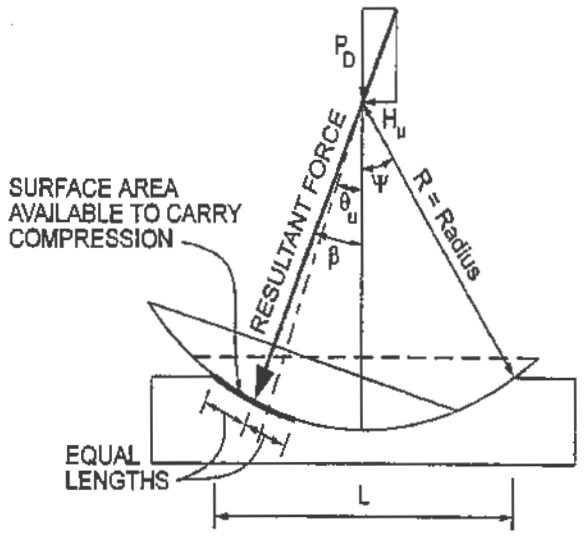

Figure C14.7.3.3-1 Bearing Geometry.

14.7.4 Pot Bearings

14.7.4.1 General

Where pot bearings are provided with a PTFE slider to provide for both rotation and horizontal movement, such sliding surfaces and any guide systems shall be designed in accordance with the provisions of Articles 14.7.2 and 14.7.9.

The rotational elements of the pot bearing shall consist of at least a pot, a piston, an elastomeric disc, and sealing rings.

For the purpose of establishing the forces and deformations imposed on a pot bearing, the axis of rotation shall be taken as lying in the horizontal plane at midheight of the elastomeric disc.

The minimum vertical load on a pot bearing should not be less than 20 percent of the vertical design load.

14.7.4.2 Materials

The elastomeric disc shall be made from a compound based on virgin natural rubber or virgin neoprene conforming to the requirements of Section 18.3 of the *AASHTO LRFD Bridge Construction Specifications*. The nominal hardness shall lie between 50 and 60 on the Shore A scale.

The pot and piston shall be made from structural steel conforming to AASHTO M 270 (ASTM A 709); Grades 36, 50, or 50W; or from stainless steel conforming to ASTM A 240. The finish of surfaces in contact with the elastomeric pad shall be smoother than 60 μ-in. The yield strength and hardness of the piston shall not exceed that of the pot.

Brass sealing rings satisfying Articles 14.7.4.5.2 and 14.7.4.5.3 shall conform to ASTM B 36 (half hard) for rings of rectangular cross-section, and Federal Specification QQB626, Composition 2, for rings of circular cross-section.

C14.7.4.2

Softer elastomers permit rotation more readily and are preferred.

Corrosion resistant steels, such as AASHTO M 270 (ASTM A 709), Grade 50W, are not recommended for applications where they may come into contact with saltwater or be permanently damp, unless their whole surface is completely corrosion protected. Most pot bearings are machined from a solid plate, so use of high-strength steel to decrease the wall thickness results in only a very small reduction in volume of material used.

Other properties, such as corrosion resistance, ease of machining, electrochemical compatibility with steel girders, availability, and price should also be considered. The provision on relative hardness is mentioned to avoid wear or damage on the inside surface of the pot and the consequent risk of seal failure.

The choice of brass for sealing rings reflects present practice.

14.7.4.3 Geometric Requirements

The depth of the elastomeric disc, h_r, shall satisfy:

$$h_r \geq 3.33 D_p \theta_u \qquad (14.7.4.3\text{-}1)$$

where:

D_p = internal diameter of pot (in.)

θ_u = maximum strength limit state design rotation angle specified in Article 14.4.2.2.1 (rad.)

The dimensions of the elements of a pot bearing shall satisfy the following requirements under the least favorable combination of strength limit state displacements and rotations:

- The pot shall be deep enough to permit the seal and piston rim to remain in full contact with the vertical face of the pot wall, and
- Contact or binding between metal components shall not prevent further displacement or rotation.

C14.7.4.3

The requirements of this Article are intended to prevent the seal from escaping and the bearing from locking up even under the most adverse conditions. Use of the design rotation, θ_u, means that the designer should account for both the anticipated movements due to loads and those due to fabrication and installation tolerances, including the rotation imposed on the bearing due to out-of-level of other bridge components, such as undersides of prefabricated girders, and permissible misalignments during construction. Vertical deflection caused by compressive load should also be taken into account because it will reduce the available clearance. Anchor bolts projecting above the base plate should be taken into consideration when clearance is determined.

Rotation capacity can be increased by using a deeper pot, a thicker elastomeric pad, and a larger vertical clearance between the pot wall and the piston or slider. The minimum thickness of the pad specified herein results in edge deflections due to rotation no greater than 15 percent of the nominal pad thickness. Figure C1 and Eqs. C1 and C2 may be used to verify clearance.

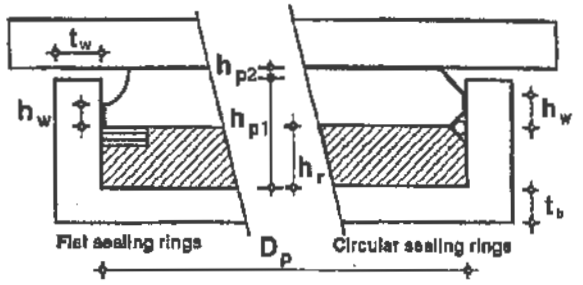

Figure C14.7.4.3-1 Pot Bearing—Critical Dimensions for Clearances.

The pot cavity depth, h_{p1}, may be determined as:

$$h_{p1} \geq \left(0.5D_p\theta_u\right) + h_r + h_w \qquad \text{(C14.7.4.3-1)}$$

where:

h_r = depth of elastomeric disc (in.)

h_w = height from top of rim to underside of piston (in.)

The vertical clearance between top of piston and top of pot wall, h_{p2} may be determined as:

$$h_{p2} \geq R_o\theta_u + 2\delta_u + 0.125 \qquad \text{(C14.7.4.3-2)}$$

where:

δ_u = vertical deflection from applicable strength load combinations in Table 3.4.1-1 (in.)

R_o = radial distance from center of pot to object in question (e.g., pot wall, anchor bolt, etc.) (in.)

Note that Eq. C1 does not contain any allowance for vertical deflection δ_u. This omission is conservative. The design rotation, θ_u, already represents an extreme rotation for use with the strength limit state and requires no further factoring.

δ_u and θ_u may also be considered at the extreme event limit state.

Thicker pads with deeper pots cause smaller strains in the elastomer, and they appear to experience less wear and abrasion. Recessing of the rings into the pad is necessary for satisfactory pad performance, but it also decreases the effective thickness of the pad at that location. Further, the recess has sometimes been cut into the pad, and this cut appears to make the pad susceptible to additional damage. Therefore, it is generally better to use a deeper pot and thicker pad even though this leads to greater material and machining costs.

14.7.4.4 Elastomeric Disc

The average stress on the elastomer at the service limit state should not exceed 3.5 ksi.

To facilitate rotation, the top and bottom surfaces of the elastomer shall be treated with a lubricant that is not detrimental to the elastomer. Alternatively, thin PTFE discs may be used on the top and bottom of the elastomer.

C14.7.4.4

The average stress on the elastomeric disc is largely limited by the seal's ability to prevent escape of the elastomer. The 3.5 ksi level has been used as a practical upper limit for some years, and most bearings have performed satisfactorily but a few seal failures have occurred. The experimental research of NCHRP 10-20A showed that greater wear and abrasion due to cyclic rotation occurred when higher stress levels are employed, but this correlation is not strong. As a result, the 3.5 ksi stress limit is retained as a practical design limit.

Lubrication helps prevent abrasion of the elastomer during cyclic rotation, however, research has shown that the beneficial effect of the lubrication tends to be lost with time. Silicon grease has been used with success. It performed well in experiments and is recommended. Thin sheets of PTFE have also been used. These sheets performed quite well in experimental studies, but they are less highly recommended because there is a concern that they may wrinkle and become ineffective. Powdered graphite has been used but has not performed well in rotation experiments. As a result, silicon grease is the preferred lubricant, and powdered graphite is not recommended. PTFE discs are permitted as a method of lubrication, but the user should be aware that some problems have been reported.

14.7.4.5 Sealing Rings

14.7.4.5.1 General

A seal shall be used between the pot and the piston. At the service limit state seals shall be adequate to prevent escape of elastomer under compressive load and simultaneously applied cyclic rotations. At the strength limit state, seals shall also be adequate to prevent escape of elastomer under compressive load and simultaneously applied static rotation.

Brass rings satisfying the requirements of either Articles 14.7.4.5.2 or 14.7.4.5.3 may be used without testing to satisfy the above requirements. The Engineer may approve other sealing systems on the basis of experimental evidence.

C14.7.4.5.1

Failure of seals has been one of the most common problems in pot bearings. Multiple flat brass rings, circular brass rod formed and brazed into a ring, and proprietary plastic rings have been found to be successful. Experimental research suggests that solid circular brass rings provide a tight fit and prevent leakage of the elastomer, but they experience severe wear during cyclic rotation. Experiments suggest that flat brass rings are somewhat more susceptible to elastomer leakage and fracture, but they are less prone to wear. PTFE rings should not be used. The rings should preferably be recessed into the elastomer or vulcanized to it in order to minimize distortion of the elastomer.

Cyclic rotation of the bearing due to temperature variations or traffic loading can cause chafing of the elastomer against the pot wall, which can give rise to some loss of elastomer past the seal. The detail design of the sealing system is important in preventing this. The details of the tests for alternative sealing systems are left to the discretion of the Engineer. However, tests should include cyclic rotation.

14.7.4.5.2 Rings with Rectangular Cross-Sections

Three rectangular rings shall be used. Each ring shall be circular in plan but shall be cut at one point around its circumference. The faces of the cut shall be on a plane at 45° to the vertical and to the tangent of the circumference. The rings shall be oriented so that the cuts on each of the three rings are equally spaced around the circumference of the pot.

The width of each ring shall not be less than either 0.02 D_p or 0.25 in. and shall not exceed 0.75 in. The depth of each shall not be less than 0.2 times its width.

14.7.4.5.3 Rings with Circular Cross-Sections

One circular closed ring shall be used with an outside diameter of D_p. It shall have a cross-sectional diameter not less than either 0.0175 D_p or 0.15625 in.

14.7.4.6 Pot

The pot shall consist at least of a wall and base. All elements of the pot shall be designed to act as a single structural unit.

The minimum thickness of a base bearing directly against concrete or grout shall satisfy:

- $t_b \geq 0.06 D_p$ and (14.7.4.6-1)
- $t_b \geq 0.75\,\text{in.}$ (14.7.4.6-2)

The thickness of a base bearing directly on steel girders or load distribution plates shall satisfy:

- $t_b \geq 0.04 D_p$ and (14.7.4.6-3)
- $t_b \geq 0.50\,\text{in.}$ (14.7.4.6-4)

The minimum pot wall thickness, t_w, for an unguided sliding pot bearing shall satisfy:

$$t_w \geq \frac{D_p \sigma_s}{1.25 F_y} \qquad (14.7.4.6\text{-}5)$$

and

$$t_w \geq 0.75\,\text{in.} \qquad (14.7.4.6\text{-}6)$$

C14.7.4.6

Pots are constructed most reliably by machining from a single plate. For very large bearings, this may become prohibitively expensive, so fabrication by welding a ring to a base plate is implicitly accepted. However, the ring must be attached to the plate by a full penetration weld because the wall is subject to significant bending moments where it joins the base plate. The quality of welding should be assured by quality control. The finished inside profile of the pot must satisfy the required shape and tolerances. Straightening and machining may be needed to rectify welding distortions.

The lower bounds on the thickness of the base plate are intended to provide some rigidity to counteract the effects of uneven bearing. If the base plate was to deform significantly, the volume of elastomer would be inadequate to fill the space in the pot, and hard contact could occur between some elements.

Eqs. 5 and 6 define minimum wall thickness requirements for unguided pot bearings. Eq. 5 is based upon hoop strength of the pot walls with the elastomeric disc under hydrostatic compressive stress. This equation is conservative for this application, because it neglects the beneficial effect of the bending strength and stiffness at the pot wall-base interface. However, this equation provides no lateral (horizontal) resistance to the bearing, and it is limited to unguided bearings (*Stanton, 1999*).

The limitation of Eq. 6 is based upon past manufacturing practice (*SCEF, 1991*).

where:

t_w = pot wall thickness (in.)

F_y = yield strength of the steel (ksi)

D_p = internal diameter of pot (in.)

σ_s = average compressive stress due to total load from applicable service load combinations in Table 3.4.1-1 (ksi)

The wall thickness (t_w) and base thickness (t_b) of guided or fixed pots shall also satisfy the requirements of Eq. 14.7.4.7-1 for applicable strength and extreme event load combinations specified in Table 3.4.1-1 which are transferred by the piston to the pot wall.

14.7.4.7 Piston

The piston shall have the same plan shape as the inside of the pot. Its thickness shall be adequate to resist the loads imposed on it, but shall not be less than six percent of the inside diameter of the pot, D_p, except at the rim.

The perimeter of the piston shall have a contact rim through which horizontal loads may be transmitted. In circular pots, its surface may be either cylindrical or spherical. The body of the piston above the rim shall be set back or tapered to prevent binding. The height, w, of the piston rim shall be large enough to transmit the strength and extreme event limit states horizontal forces between the pot and the piston.

Where a mechanical device is used to connect the superstructure to the substructure, it shall be designed to resist the greater of H_u at the support for the strength and extreme event limit states, or 15 percent of the maximum vertical ~~service~~ load at the service limit state at that location.

Pot bearings subjected to lateral loads shall be proportioned so that the thickness of the pot wall (t_w) and the pot base (t_b) shall satisfy:

$$t_w, t_b \geq \sqrt{\frac{25 H_u \theta_u}{F_y}} \qquad (14.7.4.7\text{-}1)$$

Pot bearings that transfer load through the piston shall satisfy:

$$h_w \geq \frac{1.5 H_u}{D_p F_y} \qquad (14.7.4.7\text{-}2)$$

$$h_w \geq 0.125 \text{ in., and} \qquad (14.7.4.7\text{-}3)$$

$$h_w \geq 0.03 D_p \qquad (14.7.4.7\text{-}4)$$

where:

The surface finish on the inside of the pot may have considerable impact on bearing performance. A smooth finish reduces rotational resistance and wear and abrasion of the elastomer. It may also improve the performance of the sealing rings, but at present there are no definitive limits as to what the surface finish should ideally be for good bearing performance. Metalization on the inside of the pot tends to cause a rougher surface finish, which leads to significant increases in damage under cyclic rotation; as a result, metalization may not be a good method of protection.

Maximum extreme event limit state forces should be considered when the bearing is not intended to act as a fuse or irreparable damage is not permitted.

C14.7.4.7

The required piston thickness is controlled by rigidity and strength. A central internal guide bar fitted in a slot in the piston causes bending moments that are largest where the piston is weakest. In this case, the piston must also be thick enough to supply an adequate grip length for any bolts used to secure the guide bar.

If the piston rotates while a horizontal load is acting, the piston rim will be subject to bearing stresses due to horizontal load and to shear forces. If the rim surface is cylindrical, contact between it and the pot wall will theoretically be along a line when the piston rotates. In practice, some localized yielding is inevitable. If the rim surface forms part of a sphere, the contact area will be finite, providing less potential for local damage. Damage to the pot wall should be avoided because it will jeopardize the effectiveness of the seal. The dimensions of the rim depend on the contact area, and because this is uncertain, the rim should be designed conservatively. Eq. 4 is based on consideration of bearing stresses alone, using a strength limit state horizontal force of 0.15 times the vertical service limit state load, $F_y = 50.0$ ksi and $\phi = 0.9$.

The 15 percent factor applied to the service limit state vertical load, embedded in Eq. 4 and used in the design of mechanical devices that connect the superstructure to the substructure, approximates a strength limit state horizontal design force.

Maximum extreme event limit state forces should be considered when the bearing is not intended to act as a fuse or irreparable damage is not permitted. θ_u may also be considered at the extreme event limit state.

The clearance between piston and pot is critical to the proper functioning of the bearing. In most bearings the finished clearance, after anticorrosion coatings have been applied, should be about 0.02 to 0.04 in., a range that is easily achievable. The equation for minimum clearance is based on geometry. Eq. 5 may occasionally produce a negative number; however, in these instances the minimum value of 0.02 in. controls.

H_u = lateral load from applicable strength and extreme event load combinations in Table 3.4.1-1 (kip)

θ_u = maximum strength limit state design rotation angle specified in Article 14.4.2.2.1 (rad.)

F_y = yield strength of steel (ksi)

D_p = internal diameter of pot (in.)

h_w = height from top of rim to underside of piston (in.)

t_w = pot wall thickness (in.)

t_b = pot base thickness (in.)

The diameter of the piston rim shall be the inside diameter of the pot less a clearance, c. The clearance, c, shall be as small as possible in order to prevent escape of the elastomer but not less than 0.02 in. If the surface of the piston rim is cylindrical, the clearance shall satisfy:

$$c \geq \theta_u \left(h_w - \frac{D_p \theta_u}{2} \right) \qquad (14.7.4.7\text{-}5)$$

where:

D_p = internal diameter of pot (in.)

h_w = height from top of rim to underside of piston (in.)

θ_u = maximum strength limit state design rotation angle specified in Article 14.4.2.2.1 (rad.)

14.7.5 Steel-Reinforced Elastomeric Bearings—Method B

14.7.5 Steel-Reinforced Elastomeric Bearings~~—~~ Method B

14.7.5.1 General

Steel-reinforced elastomeric bearings may be designed using either of two methods commonly referred to as Method A and Method B. Where the provisions of this article are used, the component shall be taken to meet the requirements of Method B. Where the provisions of Article 14.7.6 are used, the component shall be taken to meet the requirements of Method A.

Steel-reinforced elastomeric bearings shall consist of alternate layers of steel reinforcement and elastomer bonded together. In addition to any internal reinforcement, bearings may have external steel load plates bonded to either or both the upper or lower elastomer layers.

Tapered elastomer layers shall not be used. All internal layers of elastomer shall be of the same thickness. The top and bottom cover layers shall be no thicker than 70 percent of the internal layers.

The shape factor of a layer of an elastomeric bearing, S_i, shall be taken as the plan area of the layer divided by the area of perimeter free to bulge. **Unless noted otherwise, the values of S_i and h_{ri} to be used in Articles 14.7.5 and 14.7.6 for steel-reinforced elastomeric bearing design shall be that for an internal layer.** For rectangular bearings without holes, the shape factor of a layer may be taken as:

$$S_i = \frac{LW}{2h_{ri}(L+W)} \qquad (14.7.5.1\text{-}1)$$

where:

L = **plan dimension of the bearing perpendicular to the axis of rotation under consideration** ~~length of a rectangular elastomeric bearing~~ (**generally** parallel to **the global** longitudinal bridge axis) (in.)

W = **plan dimension of the bearing parallel to the axis of rotation under consideration** ~~width of the bearing in the transverse direction~~ **(generally parallel to the global transverse bridge axis)** (in.)

C14.7.5.1

The stress limits associated with Method A usually result in a bearing with a lower capacity than a bearing designed using Method B. This increased capacity resulting from the use of Method B requires additional testing and quality control.

Steel-reinforced elastomeric bearings are treated separately from other elastomeric bearings because of their greater strength and superior performance in practice (*Roeder et al., 1987; Roeder and Stanton, 1991*). **The critical parameter in their design is the shear strain in the elastomer at its interface with the steel plates. Axial load, rotation and shear deformations all cause such shear strains.** The design method **(Method B)** described in this section **accounts directly for those shear strains, and provides a versatile means of allowing for different combinations of loadings.** ~~allows higher compressive stresses and more slender bearings than are permitted for other types of elastomeric bearings, both of which can lead to smaller horizontal forces on the substructure. To qualify for the more liberal design, the bearing should be subjected to more rigorous testing.~~

Tapered layers cause larger shear strains and bearings made with them fail prematurely due to delamination or rupture of the reinforcement. All internal layers should be the same thickness because the strength and stiffness of the bearing in resisting compressive load are controlled by the thickest layer.

The shape factor, S_i, is defined in terms of the gross plan dimensions of layer i. Refinements to account for the difference between gross dimensions and the dimensions of the reinforcement are not warranted because quality control on elastomer thickness has a more dominant influence on bearing behavior. Holes are not allowed.

h_{ri} = thickness of ith elastomeric layer (in.)

For circular bearings without holes, the shape factor of a layer may be taken as:

$$S_i = \frac{D}{4h_{ri}} \qquad (14.7.5.1\text{-}2)$$

where:

D = diameter of the projection of the loaded surface of the bearing in the horizontal plane (in.)

Large steel-reinforced elastomeric bearings (defined as those which are thicker than 8 in. or having a plan area greater than 1000 in.^{2}) are more difficult to fabricate than small ones. The consequences of failure are also likely to be more severe in a large bearing. As such, large bearings should be designed according to Method B which requires additional testing and quality control.

14.7.5.2 Material Properties

The shear modulus of the elastomer at 73°F shall be used as the basis for design.

The elastomer shall have a specified shear modulus between 0.080 and 0.175 ksi. It shall conform to the requirements of Section 18.2 of the *AASHTO LRFD Bridge Construction Specifications* and AASHTO M 251.

The acceptance criteria in AASHTO M 251 shall be followed which:

- permits a variation of ± 15 percent from the value specified for shear modulus according to the first **and second** paragraphs of this Article.
- Does not permit a shear modulus below 0.080 ksi.

For design purposes, the shear modulus shall be taken as the least favorable of the values in the ranges described above.

Other properties, such as creep deflection, should be obtained from Table 14.7.6.2-1 or from tests conducted using AASHTO M 251.

For the purposes of bearing design, all bridge sites shall be classified as being in temperature Zones A, B, C, D, or E for which design data are given in Table 1. In the absence of more precise information, Figure 1 may be used as a guide in selecting the zone required for a given region.

Bearings shall be made from AASHTO low-

C14.7.5.2

Shear modulus, G, is the most important material property for design, and it is, therefore, the primary means of specifying the elastomer. Hardness has been widely used in the past, and is still permitted for Method A design, because the test for it is quick and simple. However, the results obtained from it are variable and correlate only loosely with shear modulus.

Materials with a specified shear modulus greater than 0.175 ksi are prohibited because they generally have a smaller elongation at break and greater stiffness and greater creep than their softer counterparts. This inferior performance is generally attributed to the larger amounts of filler present. Their fatigue behavior does not differ in a clearly discernible way from that of softer materials.

The least favorable value for the shear modulus used in design calculations is dependent upon whether the parameter being calculated is conservatively estimated by over- or under-estimating the shear modulus. The forgiving nature of elastomers tends to compensate for service and installation conditions which are less than ideal. See Article 14.7.5.3.4 2. Despite this, the designer should be cautious about specifying a shear modulus which is at or near the specified upper or lower bounds of 0.175 ksi and 0.080 ksi, respectively.

The zones are defined by their extreme low temperatures or the largest number of consecutive days when the temperature does not rise above 32°F, whichever gives the more severe condition.

Shear modulus increases as the elastomer cools, but the extent of stiffening depends on the elastomer compound, time, and temperature. It is, therefore,

temperature grades of elastomer as defined in Section 18 of the *AASHTO LRFD Bridge Construction Specifications* and AASHTO M 251. The minimum grade of elastomer required for each low-temperature zone shall be taken as specified in Table 1.

Any of the three design options listed below may be used:

- Specify the elastomer with the minimum low-temperature grade indicated in Table 1 and determine the shear force transmitted by the bearing as specified in Article 14.6.3.1;
- Specify the elastomer with the minimum low-temperature grade for use when special force provisions are incorporated in the design and provide a low friction sliding surface, in which case the bridge shall be designed to withstand twice the design shear force specified in Article 14.6.3.1; or
- Specify the elastomer with the minimum low-temperature grade for use when special force provisions are incorporated in the design but do not provide a low friction sliding surface, in which case the components of the bridge shall be designed to resist four times the design shear force as specified in Article 14.6.3.1.

important to specify a material with low-temperature properties that are appropriate for the bridge site. In order of preference, the low-temperature classification should be based on:

- The 50-year temperature history at the site,
- A statistical analysis of a shorter temperature history, or
- Figure 1.

Table 1 gives the minimum elastomer grade to be used in each zone. A grade suitable for a lower-temperature may be specified by the Engineer, but improvements in low-temperature performance can often be obtained only at the cost of reductions in other properties. This low-temperature classification is intended to limit the force on the bridge substructure to 1.5 times the service limit state design force under extreme environmental conditions.

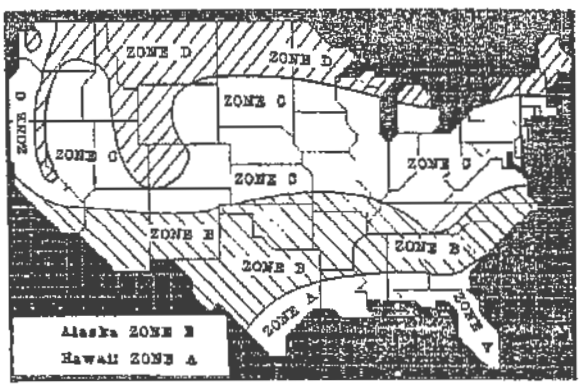

Figure 14.7.5.2-1 Temperature Zones.

Table 14.7.5.2-1 Low-Temperature Zones and Minimum Grades of Elastomer.

Low-Temperature Zone	A	B	C	D	E
50-Year low temperature (°F)	0	−20	−30	−45	< −45
Maximum number of consecutive days when the temperature does not rise above 32°F	3	7	14	N/A	N/A
Minimum low-temperature elastomer grade	0	2	3	4	5
Minimum low-temperature elastomer grade when special force provisions are incorporated	0	0	2	3	5

14.7.5.3 Design Requirements

14.7.5.3.1 Scope

Bearings designed by the provisions herein shall be tested in accordance with the requirements for steel-reinforced elastomeric bearings as specified in Article 18.2 of the *AASHTO LRFD Bridge Construction Specifications* and AASHTO M 251.

C14.7.5.3.1

Steel-reinforced bearings are designed to resist relatively high stresses. Their integrity depends on good quality control during manufacture, which can only be ensured by rigorous testing.

14.7.5.3.2 ***Shear Deformations*** ~~*Compressive Stress*~~

The maximum horizontal displacement of the bridge superstructure, Δ_D, shall be taken as 65 percent of the design thermal movement range, Δ_T, computed in accordance with Article 3.12.2 combined with movements caused by creep, shrinkage, and post-tensioning.

The maximum shear deformation of the bearing, at the service limit state, Δ_S, shall be taken as Δ_D, modified to account for the substructure stiffness and construction procedures. If a low friction sliding surface is installed, Δ_S need not be taken to be larger than the deformation corresponding to first slip.

The bearing shall satisfy:

$$h_{rt} \geq 2\Delta_S \qquad (14.7.5.3.2\text{-}1)$$

where:

h_{rt} = total elastomer thickness (in.)

Δ_S = maximum total shear deformation of the elastomer from applicable service load combinations in Table 3.4.1-1 (in.)

~~In any elastomeric bearing layer, the average compressive stress at the service limit state shall satisfy:~~

~~• For bearings subject to shear deformation:~~

~~$\sigma_s \leq 1.66GS$ and (14.7.5.3.2-1)~~

C14.7.5.3.2

The shear deformation is limited to ±0.5 h_{rt} in order to avoid rollover at the edges and delamination due to fatigue.

Generally, the installation temperature is within ±15 percent of the average of the maximum and minimum design temperatures. Consequently, 65 percent of the thermal movement range is used for design purposes (*Roeder, 2002*). The forgiving nature of elastomeric bearings more than accounts for actual installation temperatures greater than or less than the likely approximated installation temperature. Additionally, if the bearing is originally set or reset at the average of the design temperature range, 50 percent of the design thermal movement range computed in accordance with Article 3.12.2 may be substituted for 65 percent as specified.

Fatigue tests that formed the basis for this provision were conducted to 20,000 cycles, which represents one expansion/contraction cycle per day for approximately 55 years (*Roeder et al., 1990*). The provisions will, therefore, be unconservative if the shear deformation is caused by high-cycle loading due to braking forces or vibration. The maximum shear deformation due to these high-cycle loadings should be restricted to no more than ±0.10 h_{rt}, unless better information is available. At this strain amplitude, the experiments showed that the bearing has an essentially infinite fatigue life.

If the bridge girders are lifted to allow the bearings to realign after some of the girder shortening has occurred, that may be accounted for in design.

Pier deflections sometimes accommodate a significant portion of the bridge movement, and this may reduce the movement that must be accommodated by the bearing. Construction methods may increase the bearing movement because of poor installation tolerances or poor timing of the bearing installation.

~~These provisions limit the shear stress and strain in the elastomer. The relationship between the shear stress and the applied compressive load depends directly on shape factor, with higher shape factors leading to higher capacities. If movements are accommodated by shear deformations of the elastomer, they cause shear stresses~~

~~$\sigma_s \leq 1.6$ ksi (14.7.5.3.2-2)~~

~~$\sigma_L \leq 0.66GS$ (14.7.5.3.2-3)~~

~~• For bearings fixed against shear deformation:~~

~~$\sigma_s \leq 2.00GS$ and (14.7.5.3.2-4)~~

~~$\sigma_s \leq 1.75$ ksi (14.7.5.3.2-5)~~

~~$\sigma_L \leq 1.00GS$ (14.7.5.3.2-6)~~

~~where:~~

~~σ_s = average compressive stress due to total load from applicable service load combinations in Table 3.4.1-1 (ksi)~~

~~σ_L = average compressive stress at the service limit state (load factor = 1.0) due to live load (ksi)~~

~~G = shear modulus of the elastomer (ksi)~~

~~S = shape factor of thickest layer of an elastomeric bearing~~

~~in the elastomer. These add to the shear stresses caused by compressive load, so a lower load limit is specified.~~

~~The compressive limits, in terms of GS, were derived from static and fatigue tests correlated with theory (Roeder and Stanton 1986; Roeder et al. 1990). There was large scatter in the stress at which delamination started in different fatigue and static tests. The absolute limits of 1.6 and 1.75 ksi came from the static tests. Delamination is a service limit state, but it may lead to more serious structural problems.~~

~~The specified stress limits provide a safety factor of approximately 1.5 against initial delamination. However, long term loading was not investigated in the test program, although it is known to be more detrimental to the bond, so the real safety factor against initiation of debonding may be somewhat less than 1.5.~~

~~The compressive stress limits, in terms of GS, were derived from fatigue tests and are based on the observation that fatigue cracking in the experiments remained acceptably low if the maximum shear strain due to total dead and live load was kept below 3.0, and the maximum shear strain range for cyclic loading was kept below 1.5. The level of damage considered acceptable had to be selected arbitrarily; therefore, the limits are not absolute.~~

~~Increases in the load to simulate the effects of impact are not required. This is because the impact stresses are likely to be only a small proportion of the total load and because the stress limits are based on fatigue damage, the limits of which are not clearly defined.~~

~~Two limits are given, one for total load and one for live load, and the most restrictive one will control.~~

14.7.5.3.3 ***Combined Compression, Rotation and Shear*** ~~*Compressive Deflection*~~

Combinations of axial load, rotation and shear at the service limit state shall satisfy:

$$(\gamma_{a,st} + \gamma_{r,st} + \gamma_{s,st}) + 1.75(\gamma_{a,cy} + \gamma_{r,cy} + \gamma_{s,cy}) \leq 5.0 \quad (14.7.5.3.3\text{-}1)$$

The static component of γ_a shall also satisfy:

$$\gamma_{a,st} \leq 3.0 \quad (14.7.5.3.3\text{-}2)$$

where:

γ_a = shear strain caused by axial load

γ_r = shear strain caused by rotation

C14.7.5.3.3

Elastomers are almost incompressible, so when a steel-laminated bearing is loaded in compression, the elastomer expands laterally due to the Poisson effect. That expansion is partially restrained by the steel plates to which the elastomer layers are bonded, and the restraint results in bulging of the layers between the plates. The bulging creates shear stresses at the bonded interface between the elastomer and steel. If they become large enough they can cause shear failure of the bond or the elastomer adjacent to it. This is the most common form of damage in steel-laminated elastomeric bearings, and is the reason why limitations on the shear strain in the elastomer dominate the design requirements.

The cyclic components of the loading are multiplied by an amplification factor of 1.75 in Eq. 1. This reflects the results of tests that showed that cyclic shear strain causes more debonding damage

γ_s = shear strain caused by shear displacement

Subscripts "*st*" and "*cy*" indicate static and cyclic loading respectively. Cyclic loading shall consist of loads induced by traffic. All other loads may be considered static. In rectangular bearings, the shear strains shall be evaluated for rotation about the axis which is parallel to the transverse axis of the bridge. Evaluation of shear strains for rotation about the axis which is parallel to the longitudinal axis of the bridge should also be considered. For circular bearings, the rotations about two primary orthogonal axes shall be added vectorially, and the shear strains shall be evaluated using the largest sum.

The shear strains γ_a, γ_r and γ_s shall be established by rational analysis, in lieu of which the following approximations are acceptable.

The shear strain due to axial load may be taken as:

$$\gamma_a = D_a \frac{\sigma_s}{GS_i} \qquad (14.7.5.3.3\text{-}3)$$

in which, for a rectangular bearing:

$$D_a = 1.4 \qquad (14.7.5.3.3\text{-}4)$$

and, for a circular bearing:

$$D_a = 1.0 \qquad (14.7.5.3.3\text{-}5)$$

where:

D_a = dimensionless coefficient used to determine shear strain due to axial load

G = shear modulus of the elastomer (ksi)

S_i = shape factor of the ith internal layer of an elastomeric bearing

σ_s = average compressive stress due to total static or cyclic load from applicable service load combinations in Table 3.4.1-1 (ksi)

The shear strain due to rotation for a rectangular bearing may be taken as:

$$\gamma_r = D_r \left(\frac{L}{h_{ri}}\right)^2 \frac{\theta_s}{n} \qquad (14.7.5.3.3\text{-}6)$$

in which:

$$D_r = 0.5 \qquad (14.7.5.3.3\text{-}7)$$

than a static shear strain of the same amplitude. This approach, of using an explicit summation of the shear strain components coupled with an amplification factor on cyclic components, is found in other specifications, such as the European EN 1337.

In some cases, the rotations due to dead and live load will have opposite signs, in which case use of the amplification factor of 1.75 could lead to an amplified rotation that is artificially low. This is clearly not consistent with the intent of the amplification factor. In cases where the sense of the loading components in the critical combination is unclear, the sum of the absolute value should be used.

For rectangular bearings, separate evaluations about each primary rotation axis (parallel to the transverse global axis and parallel to the longitudinal global axis of the bridge) may be necessary and appropriate, such as for structures with significant skew. Where rectangular bearings are evaluated about an axis parallel to the global longitudinal axis of the bridge, the definitions of L and W should be interchanged.

For highly skewed or curved bridges, the girder ends will significantly rotate in both bending and torsion. Circular bearings offer a good alternative.

The constants 1.4 assigned to D_a and 0.5 assigned to D_r for rectangular bearings represent simplified values for determining shear strains which are evaluated for rotation about an axis which is parallel to the transverse axis of the bridge. They were derived from procedures suggested by Stanton, et al. (*2007*). D_a and D_r may alternatively be determined with Eqs. C1 through C6 about either primary orthogonal axis for rectangular bearings.

$$D_a = \max\left\{d_{a1}, \left(d_{a2} + d_{a3} \times \frac{L}{W}\right)\right\} \qquad (C14.7.5.3.3\text{-}1)$$

$$D_r = \frac{1.552 - 0.627\lambda}{2.233 + 0.156\lambda + \frac{L}{W}} \le 0.5 \qquad (C14.7.5.3.3\text{-}2)$$

in which:

$$d_{a1} = 1.06 + 0.210\lambda + 0.413\lambda^2 \qquad (C14.7.5.3.3\text{-}3)$$

$$d_{a2} = 1.506 - 0.071\lambda + 0.406\lambda^2 \qquad (C14.7.5.3.3\text{-}4)$$

$$d_{a3} = -0.315 + 0.195\lambda - 0.047\lambda^2 \qquad (C14.7.5.3.3\text{-}5)$$

$$\lambda = S_i\sqrt{\frac{3G}{K}} \qquad (C14.7.5.3.3\text{-}6)$$

where:

and, for a circular bearing:

$$\gamma_r = D_r\left(\frac{D}{h_{ri}}\right)^2 \frac{\theta_s}{n} \qquad (14.7.5.3.3\text{-}8)$$

in which:

$$D_r = 0.375 \qquad (14.7.5.3.3\text{-}9)$$

where:

D = diameter of the bearing (in.)

D_r = dimensionless coefficient used to determine shear strain due to rotation

h_{ri} = thickness of ith internal elastomeric layer (in.)

L = plan dimension of the bearing perpendicular to the axis of rotation under consideration (generally parallel to the global longitudinal bridge axis) (in.)

n = number of interior layers of elastomer, where interior layers are defined as those layers which are bonded on each face. Exterior layers are defined as those layers which are bonded only on one face. When the thickness of the exterior layer of elastomer is equal to or greater than one-half the thickness of an interior layer, the parameter, n, may be increased by one-half for each such exterior layer.

θ_s = maximum static or cyclic service limit state design rotation angle of the elastomer specified in Article 14.4.2.1 (rad.)

The shear strain due to shear deformation of any bearing may be taken as:

$$\gamma_s = \frac{\Delta_s}{h_{rt}} \qquad (14.7.5.3.3\text{-}10)$$

where:

h_{rt} = total elastomer thickness (in.)

Δ_s = maximum total static or cyclic shear deformation of the elastomer from applicable service load combinations in Table 3.4.1-1 (in.)

In each case, the static and cyclic components of

K = bulk modulus (ksi)

L = plan dimension of the bearing perpendicular to the axis of rotation under consideration (generally parallel to the global longitudinal bridge axis) (in.)

W = plan dimension of the bearing parallel to the axis of rotation under consideration (generally parallel to the global transverse bridge axis) (in.)

λ = compressibility index

In the absence of better information, the bulk modulus, K, may be taken as 450 ksi for all elastomers permissible under this specification for use in steel-reinforced elastomeric bearings.

The compressibility index, λ, represents the effect of finite bulk stiffness of the rubber. For conventional bearings it makes little difference, but in high shape factor bearings it reduces the stiffness below the value that would be computed using an incompressible model (i.e. with $\lambda = 0$).

the shear strain shall be considered separately and then combined using Eq. 1.

In bearings with externally bonded steel plates on both top and bottom, the peak hydrostatic stress shall satisfy:

$$\sigma_{hyd} \le 2.25G \qquad (14.7.5.3.3\text{-}11)$$

in which:

$$\sigma_{hyd} = 3GS_i^2 \frac{\theta_s}{n} C_a \qquad (14.7.5.3.3\text{-}12)$$

$$C_a = \frac{4}{3}\left\{\left(\alpha^2 + \frac{1}{3}\right)^{1.5} - \alpha\left(1-\alpha^2\right)\right\} \qquad (14.7.5.3.3\text{-}13)$$

$$\alpha = \frac{\varepsilon_a}{S_i}\frac{n}{\theta_s} \qquad (14.7.5.3.3\text{-}14)$$

$$\varepsilon_a = \frac{\sigma_s}{3B_a G S_i^2} \qquad (14.7.5.3.3\text{-}15)$$

for rectangular bearings:

$$B_a = 1.6 \qquad (14.7.5.3.3\text{-}16)$$

and, for circular bearings:

$$B_a = 1.6 \qquad (14.7.5.3.3\text{-}17)$$

where:

B_a = dimensionless coefficient used to determine peak hydrostatic stress

ε_a = total of static and cyclic average axial strain taken as positive for compression in which the cyclic component is multiplied by 1.75 from applicable service load combinations in Table 3.4.1-1 (ksi)

θ_s = total of static and cyclic maximum service limit state design rotation angles of the elastomer specified in Article 14.4.2.1 in which the cyclic component is multiplied by 1.75 (rad.)

σ_s = total of static and cyclic average compressive stress in which the cyclic component is multiplied by 1.75 from applicable service load combinations in Table 3.4.1-1 (ksi)

For values of α greater than one third, the hydrostatic stress is compressive, so Eq. 11 is

Previous editions of these specifications contained provisions to prevent net upward movement of any point on the bearing. Recent research (*Stanton et al., 2007*) has shown that, if the bearing is not equipped with bonded external plates, the sole plate can lift away from the bearing without causing any tension in the elastomer. Furthermore, the compression effects are slightly less severe than in a bearing that is identical except for the presence of bonded external plates, and is subjected to the same loading combination. Thus the "no-lift-off" provisions have been removed.

However, in a bearing equipped with external plates, upward movement of part of the plate can cause internal rupture due to hydrostatic tension. Provisions have been added to address this case. It is expected to control only rarely, and when it does, it is likely to do so during under construction conditions, when the axial load is light and the rotation, due to pre-camber, is large. For the construction load case, the cyclic components of the loading will be zero. For bearings with external plates, Eqs. 1 and 11 should be checked under all critical loading conditions, including construction, and about both strong and weak axes of rectangular bearings when necessary and appropriate.

The constant 1.6 assigned to B_a for rectangular and circular bearings represents a simplified value for determining hydrostatic tension which is evaluated for rotation about an axis which is parallel to the transverse axis of the bridge. It was derived from procedures suggested by Stanton, et al., 2007. B_a for rectangular and circular bearings may alternatively be determined with Eqs. C7 or C8 about either primary orthogonal axis.

for rectangular bearings:

$$B_a = (2.31 - 1.86\lambda) + (-0.90 + 0.96\lambda) \times \left(1 - \min\left\{\frac{L}{W}, \frac{W}{L}\right\}\right)^2 \qquad (C14.7.5.3.3\text{-}7)$$

and, for circular bearings:

$$B_a = \frac{2}{1 + 2\lambda^2} \qquad (C14.7.5.3.3\text{-}8)$$

Tests have shown that sharp edges on the internal steel reinforcement layers cause stress concentrations in the elastomer and promote the onset of debonding. The internal steel reinforcement layers should be deburred or otherwise rounded prior to molding the bearing. The design values in Eq. 1 are consistent with this procedure.

satisfied automatically and no further evaluation is necessary.

~~Deflections of elastomeric bearings due to dead load and to instantaneous live load alone shall be considered separately.~~

~~Loadings considered in this Article shall be at the service limit state with all load factors equal to 1.0.~~

~~Instantaneous live load deflection shall be taken as:~~

$$\delta_L = \sum \varepsilon_{Li} h_{ri} \qquad (14.7.5.3.3\text{-}1)$$

~~where:~~

ε_{Li} = ~~instantaneous live load compressive strain in i^{th} elastomer layer~~

h_{ri} = ~~thickness of ith elastomeric layer (in.)~~

~~Initial dead load deflection shall be taken as:~~

$$\delta_d = \sum \varepsilon_{di} h_{ri} \qquad (14.7.5.3.3\text{-}2)$$

~~where:~~

ε_{di} = ~~initial dead load compressive strain in i^{th} elastomer layer~~

h_{ri} = ~~thickness of ith elastomeric layer (in.)~~

~~Long-term dead load deflection, including the effects of creep, shall be taken as:~~

$$\delta_{lt} = \delta_d + \alpha_{cr}\delta_d \qquad (14.7.5.3.3\text{-}3)$$

~~where:~~

α_{cr} = ~~creep deflection divided by initial dead load deflection~~

~~Values for ε_{Li} and ε_{di} shall be determined from test results or by analysis. Creep effects should be determined from information relevant to the elastomeric compound used. If the engineer does not elect to obtain a value for the ratio, α_{cr}, from test results using Annex A2 of the AASHTO Materials Specification M 251, the values given in Table 1 Article 14.7.6.2 may be used.~~

~~Limiting instantaneous live load deflections is important to ensure that deck joints and seals are not damaged. Furthermore, bearings that are too flexible in compression could cause a small step in the road surface at a deck joint when traffic passes from one girder to the other, giving rise to impact loading. A maximum relative live load deflection across a joint of 0.125 in. is suggested. Joints and seals that are sensitive to relative deflections may require limits that are tighter than this.~~

~~Long-term dead load deflections should be considered where joints and seals between sections of the bridge rest on bearings of different design and when estimating redistribution of forces in continuous bridges caused by settlement.~~

~~Laminated elastomeric bearings have a nonlinear load-deflection curve in compression. In the absence of information specific to the particular elastomer to be used, Equation C1 or Figure C1 in Article C14.7.6.3.3 may be used as a guide for calculating dead and live load compressive strains for Equations 1 and 2.~~

$$\varepsilon = \frac{\sigma}{6GS^2} \qquad (C14.7.5.3.3\text{-}1)$$

~~where:~~

σ = ~~instantaneous live load compressive stress or dead load compressive stress in an individual elastomer layer (ksi)~~

S = ~~shape factor of an individual elastomer layer~~

G = ~~shear modulus of the elastomer (ksi)~~

~~Equation C1 or Figure C1 in Article C14.7.6.3.3 may also be used as a guide for specifying an allowable value of compressive strain at the design dead plus live service limit state compressive load when employing Section 8.8.1 of the *AASHTO Material Specification M 251*.~~

~~Guidance for specifying an allowable value for creep when Annex A2 of the *AASHTO Materials Specification M 251* is employed may be obtained from NCHRP Report 449 or from Table 1 in Article 14.7.6.2.~~

~~Reliable test data on total deflections are rare because of the difficulties in defining the true 0.0 for deflection. However, the change in deflection due to live load can be reliably predicted either by design aids based on test results or by using theoretically based equations (Stanton and Roeder 1982). In the latter case, it is important to include the effects of bulk compressibility of the elastomer, especially for high shape factor bearings.~~

14.7.5.3.4 Stability of Elastomeric Bearings ~~Shear Deformation~~

Bearings shall be investigated for instability at the service limit state load combinations specified in Table 3.4.1-1.

Bearings satisfying Eq. 1 shall be considered stable, and no further investigation of stability is required.

$$2A \le B \qquad (14.7.5.3.4\text{-}1)$$

in which:

$$A = \frac{1.92\dfrac{h_{rt}}{L}}{\sqrt{1+\dfrac{2.0L}{W}}} \qquad (14.7.5.3.4\text{-}2)$$

$$B = \frac{2.67}{(S_i+2.0)\left(1+\dfrac{L}{4.0W}\right)} \qquad (14.7.5.3.4\text{-}3)$$

where:

G = shear modulus of the elastomer (ksi)

h_{rt} = total elastomer thickness (in.)

L = plan dimension of the bearing perpendicular to the axis of rotation under consideration (generally parallel to the global longitudinal bridge axis) (in.)

S_i = shape factor of the ith internal layer of an elastomeric bearing

W = plan dimension of the bearing parallel to the axis of rotation under consideration (generally parallel to the global transverse bridge axis) (in.)

For a rectangular bearing where L is greater than W, stability shall be investigated by interchanging L and W in Eqs. 2 and 3.

For circular bearings, stability may be investigated by using the equations for a square bearing with $W = L = 0.8\,D$.

For rectangular bearings not satisfying Eq. 1, the stress due to the total load shall satisfy Eq. 4 or 5.

- If the bridge deck is free to translate horizontally:

C14.7.5.3.4

The average compressive stress is limited to half the predicted buckling stress. The latter is calculated using the buckling theory developed by Gent, modified to account for changes in geometry during compression, and calibrated against experimental results (*Gent, 1964; Stanton et al., 1990*). This provision will permit taller bearings and reduced shear forces compared to those permitted under previous editions of the AASHTO Standard Specifications.

Eq. 4 corresponds to buckling in a sidesway mode and is relevant for bridges in which the deck is not rigidly fixed against horizontal translation at any point. This may be the case in many bridges for transverse translation perpendicular to the longitudinal axis. If one point on the bridge is fixed against horizontal movement, the sidesway buckling mode is not possible, and Eq. 5 should be used. This freedom to move horizontally should be distinguished from the question of whether the bearing is subject to shear deformations relevant to Articles 14.7.5.3.2 and 14.7.5.3.3. In a bridge that is fixed at one end, the bearings at the other end will be subject to imposed shear deformation but will not be free to translate in the sense relevant to buckling due to the restraint at the opposite end of the bridge.

A negative or infinite limit from Eq. 5 indicates that the bearing is stable and is not dependent on σ_s.

If the value $A-B \le 0$, the bearing is stable and is not dependent on σ_s.

$$\sigma_s \le \frac{GS_1}{2A-B} \qquad (14.7.5.3.4\text{-}4)$$

- **If the bridge deck is fixed against horizontal translation:**

$$\sigma_s \le \frac{GS_1}{A-B} \qquad (14.7.5.3.4\text{-}5)$$

~~The maximum horizontal displacement of the bridge superstructure, Δ_Q, shall be taken as 65 percent of the design thermal movement range, Δ_t, computed in accordance with Article 3.12.2 combined with movements caused by creep, shrinkage, and post-tensioning.~~

~~The maximum shear deformation of the bearing, at the service limit state, Δ_s, shall be taken as Δ_Q, modified to account for the substructure stiffness and construction procedures. If a low friction sliding surface is installed, Δ_s need not be taken to be larger than the deformation corresponding to first slip.~~

~~The bearing shall satisfy:~~

$$h_{rt} \ge 2\Delta_s \qquad (14.7.5.3.4\text{-}1)$$

~~where:~~

~~h_{rt} = total elastomer thickness (in.)~~

~~Δ_s = maximum total shear deformation of the elastomer from applicable service load combinations in Table 3.4.1-1 (in.)~~

~~The shear deformation is limited to $\pm 0.5\ h_{rt}$ in order to avoid rollover at the edges and delamination due to fatigue.~~

~~Generally, the installation temperature is within ±15 percent of the average of the maximum and minimum design temperatures. Consequently, 65 percent of the thermal movement range is used for design purposes (Roeder 2002). The forgiving nature of elastomeric bearings more than accounts for actual installation temperatures greater than or less than the likely approximated installation temperature. Additionally, if the bearing is originally set or reset at the average of the design temperature range, 50 percent of the design thermal movement range computed in accordance with Article 3.12.2 may be substituted for 65 percent as specified.~~

~~Fatigue tests that formed the basis for this provision were conducted to 20,000 cycles, which represents one expansion/contraction cycle per day for approximately 55 years (Roeder et al. 1990). The provisions will, therefore, be unconservative if the shear deformation is caused by high cycle loading due to braking forces or vibration. The maximum shear deformation due to these high cycle loadings should be restricted to no more than $\pm 0.10\ h_{rt}$, unless better information is available. At this strain amplitude, the experiments showed that the bearing has an essentially infinite fatigue life.~~

~~If the bridge girders are lifted to allow the bearings to realign after some of the girder shortening has occurred, that may be accounted for in design.~~

~~Pier deflections sometimes accommodate a significant portion of the bridge movement, and this may reduce the movement that must be accommodated by the bearing. Construction methods may increase the bearing movement because of poor installation tolerances or poor timing of the bearing installation.~~

14.7.5.3.5 ***Reinforcement*** *~~Combined Compression and Rotation~~*

The minimum thickness of steel reinforcement, h_s, shall be .0625 in. as specified in Article 4.5 of AASHTO M 251.

The thickness of the steel reinforcement, h_s, shall satisfy:

- **At the service limit state:**

C14.7.5.3.5

The reinforcement should sustain the tensile stresses induced by compression of the bearing. With the present load limitations, the minimum steel plate thickness practical for fabrication will usually provide adequate strength.

$$h_s \geq \frac{3h_{ri}\sigma_s}{F_y} \qquad (14.7.5.3.5\text{-}1)$$

- **At the fatigue limit state:**

$$h_s \geq \frac{2h_{ri}\sigma_L}{\Delta F_{TH}} \qquad (14.7.5.3.5\text{-}2)$$

where:

ΔF_{TH} = **constant amplitude fatigue threshold for Category A as specified in Article 6.6 (ksi)**

h_{ri} = **thickness of ith internal elastomeric layer (in.)**

σ_L = **average compressive stress at the service limit state (load factor = 1.0) due to live load (ksi)**

σ_s = **average compressive stress due to total load from applicable service load combinations in Table 3.4.1-1 (ksi)**

F_y = **yield strength of steel reinforcement (ksi)**

Holes in the reinforcement are not permitted, cause stress concentration.

~~The provisions of this section shall apply at the service limit state. Rotations shall be taken as the maximum sum of the effects of initial lack of parallelism and subsequent girder end rotation due to imposed loads and movements.~~

~~Bearings shall be designed so that uplift does not occur under any combination of loads and corresponding rotations.~~

~~Rectangular bearings may be taken to satisfy uplift requirements if they satisfy:~~

$$\sigma_s > 1.0GS\left(\frac{\theta_s}{n}\right)\left(\frac{B}{h_{ri}}\right)^2 \qquad (14.7.5.3.5\text{-}1)$$

~~Rectangular bearings subjected to shear deformation shall also satisfy:~~

$$\sigma_s < 1.875GS\left[1 - 0.200\left(\frac{\theta_s}{n}\right)\left(\frac{B}{h_{ri}}\right)^2\right] \qquad (14.7.5.3.5\text{-}2)$$

~~Rectangular bearings fixed against shear deformation shall also satisfy:~~

~~The equations in this article have been changed from the format in which they appeared in earlier editions of the AASHTO Standard Specifications, but the underlying physical principles remain the same. The changes were made in order to simplify the design process by obviating the need for iterative calculations and by removing the need for deflective charts to permit computer implementation and to include provisions for circular bearings.~~

~~These provisions address two conditions. Eq. 1 ensures that no point in the bearing undergoes net uplift, and Eqs. 2 and 3 prevent excessive compressive stress on an edge. When the thickness of an outer layer of elastomer is more than one-half the thickness of an interior layer, the parameter, n, may be increased by one-half for each such exterior layer. Uplift must be prevented because strain reversal in the elastomer significantly decreases its fatigue life.~~

~~A rectangular bearing should normally be oriented so its long side is parallel to the axis about which the largest rotation occurs. The critical location in the bearing for both compression and rotation is then at the midpoint of the long side. If rotation occurs about both~~

$$\sigma_s < 2.25GS\left[1 - 0.167\left(\frac{\theta_s}{n}\right)\left(\frac{B}{h_{ri}}\right)^2\right] \qquad (14.7.5.3.5\text{-}3)$$

where:

n = number of interior layers of elastomer, where interior layers are defined as those layers which are bonded on each face. Exterior layers are defined as those layers which are bonded only on one face. When the thickness of the exterior layer of elastomer is more than one half the thickness of an interior layer, the parameter, n, may be increased by one half for each such exterior layer.

h_{ri} = thickness of ith elastomeric layer (in.)

σ_s = average compressive stress due to total load associated with the maximum rotation from applicable service load combinations in Table 3.4.1-1 (ksi)

B = length of pad if rotation is about its transverse axis or width of pad if rotation is about its longitudinal axis (in.)

θ_s = maximum service limit state design rotation angle specified in Article 14.4.2.1 (rad.)

Circular bearings may be taken to satisfy uplift requirements if they satisfy:

$$\sigma_s > 0.75GS\left(\frac{\theta_s}{n}\right)\left(\frac{D}{h_{ri}}\right)^2 \qquad (14.7.5.3.5\text{-}4)$$

Circular bearings subjected to shear deformation shall also satisfy:

$$\sigma_s < 2.5GS\left[1 - 0.15\left(\frac{\theta_s}{n}\right)\left(\frac{D}{h_{ri}}\right)^2\right] \qquad (14.7.5.3.5\text{-}5)$$

Circular bearings fixed against shear deformation shall also satisfy:

$$\sigma_s < 3.0GS\left[1 - 0.125\left(\frac{\theta_s}{n}\right)\left(\frac{D}{h_{ri}}\right)^2\right] \qquad (14.7.5.3.5\text{-}6)$$

axes, uplift and excessive compression should be investigated in both directions.

Eqs. 4 through 6 provide limits for circular bearings similar in principle to those for rectangular bearings. If the rotations are small, a circular bearing may be able to carry a higher average stress than a rectangular bearing, but a rectangular bearing rotated about its weak axis is more efficient if the rotations are significant. In all cases, the upper limits on compressive stress given in Article 14.7.5.3.2 should also be met.

The interaction between compressive and rotation capacity in a bearing is illustrated in Figure C1. It is analogous to the interaction diagram for a reinforced concrete column.

Because a high shape factor is best for resisting compression, but a low one accommodates rotation most readily, the best choice represents a compromise between the two. The "balanced design" point in Figure C1, where uplift and compressive stress are simultaneously critical, will in many cases provide the most economical solution for a given plan geometry. Table C1 gives coordinates of the balance point for different bearing shapes.

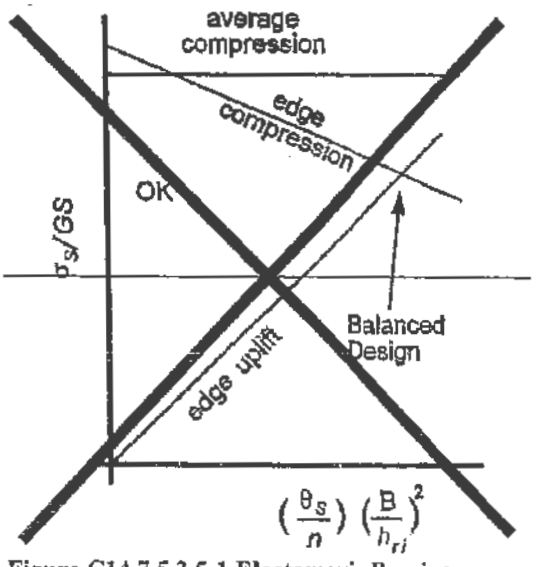

Figure C14.7.5.3.5-1 Elastomeric Bearing – Interaction Between Compressive Stress and Rotation Angle.

~~where:~~

~~θ_s = maximum service limit state design rotation angle specified in Article 14.4.2.1 (rad.)~~

~~D = diameter of pad (in.)~~

~~**Table C14.7.5.3.5-1 Steel Reinforced Elastomeric Bearings—Balanced Design.**~~

~~Bearing Type~~	$\frac{\sigma_L}{GS}$	$\left(\frac{\theta_s}{n}\right)\left(\frac{B}{h_{ri}}\right)^2$
~~Fixed Rectangular~~	~~1.636~~	~~1.636~~
~~Movable Rectangular~~	~~1.364~~	~~1.364~~
~~Fixed Circular~~	~~2.000~~	~~2.667~~
~~Movable Circular~~	~~1.667~~	~~2.222~~

14.7.5.3.6 ***Compressive Deflection*** ~~*Stability of Elastomeric Bearings*~~

Deflections of elastomeric bearings due to dead load and to instantaneous live load alone shall be considered separately.

Loadings considered in this Article shall be at the service limit state with all load factors equal to 1.0.

Instantaneous live load deflection shall be taken as:

$$\delta_L = \sum \varepsilon_{Li} h_{ri} \qquad (14.7.5.3.6\text{-}1)$$

where:

ε_{Li} = **instantaneous live load compressive strain in i^{th} elastomer layer**

h_{ri} = **thickness of ith elastomeric layer (in.)**

Initial dead load deflection shall be taken as:

$$\delta_d = \sum \varepsilon_{di} h_{ri} \qquad (14.7.5.3.6\text{-}2)$$

where:

ε_{di} = **initial dead load compressive strain in i^{th} elastomer layer**

h_{ri} = **thickness of ith elastomeric layer (in.)**

Long-term dead load deflection, including the effects of creep, shall be taken as:

$$\delta_{lt} = \delta_d + a_{cr}\delta_d \qquad (14.7.5.3.6\text{-}3)$$

where:

a_{cr} = **creep deflection divided by initial dead load deflection**

C14.7.5.3.6

Limiting instantaneous live load deflections is important to ensure that deck joints and seals are not damaged. Furthermore, bearings that are too flexible in compression could cause a small step in the road surface at a deck joint when traffic passes from one girder to the other, giving rise to additional impact loading. A maximum relative live load deflection across a joint of 0.125 in. is suggested. Joints and seals that are sensitive to relative deflections may require limits that are tighter than this.

Long-term dead load deflections should be considered where joints and seals between sections of the bridge rest on bearings of different design and when estimating redistribution of forces in continuous bridges caused by settlement.

Laminated elastomeric bearings have a nonlinear load deflection curve in compression. In the absence of information specific to the particular elastomer to be used, Equation C1 or Figure C1 in Article C14.7.6.3.3 may be used as a guide for calculating dead and live load compressive strains for Equations 1 and 2.

$$\varepsilon = \frac{\sigma}{6GS^2} \qquad (C14.7.5.3.6\text{-}1)$$

where:

σ = **instantaneous live load compressive stress or dead load compressive stress in an individual elastomer layer (ksi)**

S = **shape factor of an individual elastomer layer**

G = **shear modulus of the elastomer (ksi)**

Equation C1 or Figure C1 in Article C14.7.6.3.3 may also be used as a guide for specifying an allowable value of compressive strain at the design

Values for ε_{Ll} and ε_{Hl} shall be determined from test results or by analysis. Creep effects should be determined from information relevant to the elastomeric compound used. If the engineer does not elect to obtain a value for the ratio, a_{cr}, from test results using Annex A2 of AASHTO M 251, the values given in Table 1 Article 14.7.6.2 may be used.

~~Bearings shall be investigated for instability at the service limit state load combinations specified in Table 3.4.1-1.~~

~~Bearings satisfying Eq. 1 shall be considered stable, and no further investigation of stability is required.~~

$$\cancel{2A \le B} \qquad \cancel{(14.7.5.3.6\text{-}1)}$$

~~in which:~~

$$\cancel{A = \frac{1.92\dfrac{h_{rt}}{L}}{\sqrt{1 + \dfrac{2.0L}{W}}}} \qquad \cancel{(14.7.5.3.6\text{-}2)}$$

$$\cancel{B = \frac{2.67}{(S + 2.0)\left(1 + \dfrac{L}{4.0W}\right)}} \qquad \cancel{(14.7.5.3.6\text{-}3)}$$

~~where:~~

~~G = shear modulus of the elastomer (ksi)~~

~~L = length of a rectangular elastomeric bearing (parallel to longitudinal bridge axis) (in.)~~

~~W = width of the bearing in the transverse direction (in.)~~

~~For a rectangular bearing where L is greater than W, stability shall be investigated by interchanging L and W in Eqs. 2 and 3.~~

~~For circular bearings, stability may be investigated by using the equations for a square bearing with $W = L = 0.8\,D$.~~

~~For rectangular bearings not satisfying Eq. 1, the stress due to the total load shall satisfy Eq. 4 or 5.~~

- ~~If the bridge deck is free to translate horizontally:~~

$$\cancel{\sigma_s \le \frac{GS}{2A - B}} \qquad \cancel{(14.7.5.3.6\text{-}4)}$$

dead plus live service limit state compressive load when employing Section 8.8.1 of AASHTO M 251.

Guidance for specifying an allowable value for creep when Annex A2 of AASHTO M 251 is employed may be obtained from NCHRP Report 449 or from Table 1 in Article 14.7.6.2.

Reliable test data on total deflections are rare because of the difficulties in defining the baseline for deflection. However, the change in deflection due to live load can be reliably predicted either by design aids based on test results or by using theoretically based equations (*Stanton and Roeder, 1982*). In the latter case, it is important to include the effects of bulk compressibility of the elastomer, especially for high-shape factor bearings.

~~The average compressive stress is limited to half the predicted buckling stress. The latter is calculated using the buckling theory developed by Gent, modified to account for changes in geometry during compression, and calibrated against experimental results (Gent 1964; Stanton et al. 1990). This provision will permit taller bearings and reduced shear forces compared to those permitted under previous editions of the AASHTO Standard Specifications.~~

~~Eq. 4 corresponds to buckling in a sidesway mode and is relevant for bridges in which the deck is not rigidly fixed against horizontal translation at any point. This may be the case in many bridges for transverse translation perpendicular to the longitudinal axis. If one point on the bridge is fixed against horizontal movement, the sidesway buckling mode is not possible, and Eq. 5 should be used. This freedom to move horizontally should be distinguished from the question of whether the bearing is subject to shear deformations relevant to Articles 14.7.5.3.4 and 14.7.5.3.5.~~

~~In a bridge that is fixed at one end, the bearings at the other end will be subject to imposed shear deformation but will not be free to translate in the sense relevant to buckling due to the restraint at the opposite end of the bridge.~~

~~A negative or infinite limit from Eq. 5 indicates that the bearing is stable and is not dependent on σ_s.~~

~~If the value $A - B \le 0$, the bearing is stable and is not dependent on σ_s.~~

~~• If the bridge deck is fixed against horizontal translation:~~

$$\sigma_s \le \frac{GS}{A-B} \qquad (14.7.5.3.6\text{-}5)$$

~~*14.7.5.3.7 Reinforcement*~~

~~The thickness of the steel reinforcement, h_s, shall satisfy:~~

~~• At the service limit state:~~

$$h_s \ge \frac{3h_{max}\sigma_s}{F_y} \qquad (14.7.5.3.7\text{-}1)$$

~~• At the fatigue limit state:~~

$$h_s \ge \frac{2h_{max}\sigma_L}{\Delta F_{TH}} \qquad (14.7.5.3.7\text{-}2)$$

~~where:~~

~~ΔF_{TH} = constant-amplitude fatigue threshold for Category A as specified in Article 6.6 (ksi)~~

~~h_{max} = thickness of thickest elastomeric layer in elastomeric bearing (in.)~~

~~σ_L = average compressive stress at the service limit state (load factor = 1.0) due to live load (ksi)~~

~~σ_s = average compressive stress due to total load from applicable service load combinations in Table 3.4.1-1 (ksi)~~

~~F_y = yield strength of steel reinforcement (ksi)~~

~~If holes exist in the reinforcement, the minimum thickness shall be increased by a factor equal to twice the gross width divided by the net width.~~

~~*C14.7.5.3.7*~~

~~The reinforcement should sustain the tensile stresses induced by compression of the bearing. With the present load limitations, the minimum steel plate thickness practical for fabrication will usually provide adequate strength.~~

~~If the thickness of the steel reinforcement, h_s, is not specified by the engineer, the minimum thickness shall be .0625 in. according to Article 4.5 of the *AASHTO Materials Specification M 251*.~~

~~Holes in the reinforcement cause stress concentrations. Their use should be discouraged. The required increase in steel thickness accounts for both the material removed and the stress concentrations around the hole.~~

14.7.5.3.7~~8~~ Seismic and Other Extreme Event Provisions

Elastomeric expansion bearings shall be provided with adequate seismic and other extreme event resistant anchorage to resist the horizontal forces in excess of those accommodated by shear in the pad unless the bearing is intended to act as a fuse or irreparable damage is permitted. The sole plate and the base plate shall be made wider to accommodate the anchor bolts. Inserts

C14.7.5.3.7~~8~~

The seismic and other extreme event demands on elastomeric bearings exceed their design limits. Therefore, positive connection between the girder and the substructure concrete is needed. If the bearing is intended to act as a fuse or irreparable damage is permitted, the positive connection need not be designed for the maximum extreme event limit state forces.

through the elastomer should not be allowed, unless approved by the Engineer. The anchor holts shall be designed for the combined effect of bending and shear for seismic and other extreme event loads as specified in Article 14.6.5.3. Elastomeric fixed bearings shall be provided with horizontal restraint adequate for the full horizontal load.

14.7.5.4 Anchorage for Bearings Without Bonded External Plates

In bearings without externally bonded steel plates, a restraint system shall be used to secure the bearing against horizontal movement if:

$$\frac{\theta_s}{n} \geq \frac{3\varepsilon_a}{S_i} \qquad (14.7.5.4\text{-}1)$$

where:

n = **number of interior layers of elastomer, where interior layers are defined as those layers which are bonded on each face. Exterior layers are defined as those layers which are bonded only on one face. When the thickness of the exterior layer of elastomer is equal to or greater than one-half the thickness of an interior layer, the parameter, n, may be increased by one-half for each such exterior layer.**

S_i = **shape factor of the ith internal layer of an elastomeric bearing**

ε_a = **total of static and cyclic average axial strain taken as positive for compression in which the cyclic component is multiplied by 1.75 from applicable service load combinations in Table 3.4.1-1 (ksi)**

θ_s = **total of static and cyclic maximum service limit state design rotation angles of the elastomer specified in Article 14.4.2.1 in which the cyclic component is multiplied by 1.75 (rad.)**

Holes in elastomer cause stress concentrations that can lead to tearing of the elastomer during earthquakes.

14.7.6 Elastomeric Pads and Steel-Reinforced Elastomeric Bearings—Method A

14.7.6.1 General

The provisions of this article shall be taken to apply to the design of:

- Plain elastomeric pads, PEP;
- Pads reinforced with discrete layers of fiberglass, FGP;
- Steel-reinforced **elastomeric** bearings **in which $S_i^2/n < 22$, and for which the primary rotation is about the axis parallel to the transverse axis of the bridge**; and
- Cotton-duck pads (CDP) with closely spaced layers of cotton duck and manufactured and tested under compression in accordance with Military Specification MIL-C-882E except where superseded by this specification.

where:

n = number of interior layers of elastomer, where interior layers are defined as those layers which are bonded on each face. Exterior layers are defined as those layers which are bonded only on one face. When the thickness of the exterior layer of elastomer is equal to or greater than one-half the thickness of an interior layer, the parameter, n, may be increased by one-half for each such exterior layer.

S_i = shape factor of the ith internal layer of an elastomeric bearing

Layer thicknesses in FGP may be different from one another. For steel-reinforced elastomeric bearings designed in accordance with the provisions of this section, internal layers shall be of the same thickness, and cover layers shall be no more than 70 percent of the thickness of internal layers.

The shape factor for PEP, FGP pads and steel-reinforced elastomeric bearings covered by this article shall be determined as specified in Article 14.7.5.1. The shape factor for CDP shall be based upon the total pad thickness.

C14.7.6.1

Elastomeric pads have characteristics different from those of steel-reinforced elastomeric bearings. Plain elastomeric pads are weaker and more flexible because they are restrained from bulging by friction alone (*Roeder and Stanton, 1986, 1983*). Slip inevitably occurs, especially under dynamic loads, causing larger compressive deflections and higher internal strains in the elastomer.

A limiting value of 20 for S_i^2/n should be considered when the value of n is equal to or greater than 3.

In pads reinforced with layers of fiberglass, the reinforcement inhibits the deformations found in plain pads. However, elastomers bond less well to fiberglass, and the fiberglass is weaker than steel, so the fiberglass pad is unable to carry the same loads as a steel-reinforced bearing (*Crozier et al., 1979*). FGP have the advantage that they can be cut to size from a large sheet of vulcanized material.

CDP are preformed pads that are produced in large sheets and cut to size for specific bridge applications. CDP are reinforced with closely spaced layers of cotton-duck and typically display high compressive stiffness and strength, obtained by the use of very thin elastomeric layers. However, the thin layers also give rise to very high shear and rotational stiffness, which could easily lead to edge loading and a higher shear stiffness than that to be found in layered bearings. These increased shear and rotational stiffnesses lead to larger moments and forces in the bridge and reduced movement and rotational capacity of the bearing pad. As a consequence, CDP is often used with a PTFE slider on top of the elastomer pad (*Nordlin et al., 1970*).

It is essential that CDP bearing pads be tested and verified to meet the test requirements of Military Specification MIL-C-882E which can be found at: http://assist.daps.dla.mil. Note that there is no AASHTO equivalent to this Military Specification. A summary of testing and acceptance criteria for CDP is given below.

These criteria require that:

- A lot of preformed CDP be defined as a single sheet that is continuously formed to a given thickness except that a single lot not exceed 2500 pounds of material.
- A minimum of two samples from each lot shall be tested.
- The samples be 2 in. by 2 in. with the full sheet thickness.
- The test specimens be cured for four hours at room temperature (70° F ± 10° F).

- Each specimen is then to be loaded in compression, perpendicular to the direction of lamination.
- The origin of deflection and compressive strain measurements be taken at a compressive stress of 5 psi.
- The load be increased at a steady rate of 500 pounds per minute and the deflection shall be recorded.
- The specimen be loaded to a compressive stress of 10,000 psi without fracture or other failure.
- The entire lot of CDP be rejected if any of the CDP specimens fail to satisfy either of these test criteria: The average compressive strain of the specimens for that lot is not to be less than 0.075 in./in. nor shall it be greater than 0.175 in./in. at an average compressive stress of 2,000 psi. CDP bearing pads which fail to achieve the 10,000 psi stress limit here fall outside the specified strain range and will not develop the deformation limits permitted in later parts of Article 14.7.

14.7.6.2 Material Properties

The elastomeric-type materiala for PEP, FGP, and steel reinforced elastomeric bearings shall satisfy the requirements of Article 14.7.5.2. In addition, hardness on the Shore A scale may be used as a basis for specification of bearing material. The specified shear modulus shall be between 0.080 ksi and 0.250 ksi, and the nominal hardness shall be between 50 and 70 on the Shore A scale and shall conform to the requirements of Section 18.2 of the *AASHTO LRFD Bridge Construction Specifications* and AASHTO M 251. If the material is specified by its hardness, the shear modulus for design purposes shall be taken as the least favorable value from the range for that hardness given in Table 1. Intermediate values may be obtained by interpolation. If the material is specified by shear modulus, it shall be taken for design purposes as the least favorable from the value specified according to the ranges given in Article 14.7.5.2. Other properties, such as creep deflection, are also given in Table 1. There is an exception for steel-reinforced elastomeric bearings designed in accordance with the provisions of this section. The elastomer shall have a specified shear modulus between 0.080 and 0.175 ksi. and a nominal hardness between 50 and 60 on the Shore A scale.

The shear force on the structure induced by deformation of the elastomer in PEP, FGP and steel-reinforced elastomeric bearings shall be based on a G value not less than that of the elastomer at 73°F. Effects of relaxation shall be ignored.

C14.7.6.2

The elastomer requirements for PEP and FGP are the same as those required for steel-reinforced elastomeric bearings. The ranges given in Table 1 represent the variations found in practice. If the material is specified by hardness, a safe and presumably different estimate of G should be taken for each of the design calculations, depending on whether the parameter being calculated is conservatively estimated by over- or under-estimating the shear modulus. Creep varies from one compound to another and is generally more prevalent in harder elastomers or those with a higher shear modulus but is seldom a problem if high-quality materials are used. This is particularly true because the deflection limits are based on serviceability and are likely to be controlled by live load, rather than total load. The creep values given in Table 1 are representative of neoprene and are conservative for natural rubber.

CDP shall be manufactured to Military Standards MIL-C-882E except where the provisions of this specification supersede those provisions. The elastomeric-type materials for CDP shall have a nominal hardness between 50 and 70 on the Shore A scale and meet the requirements of Article 14.7.5.2 as appropriate. The finished CDP shall have a nominal hardness between 85 and 95 on the Shore A scale. The shear modulus for CDP may be estimated using Eq. 14.7.6.3.4-3. The cotton-duck reinforcement shall be either a two-ply cotton yarn or a single-ply 50-50 blend cotton-polyester. The fabric shall have a minimum tensile strength of 150 lb./in. width when tested by the grab method. The fill shall be 40 ± 2 threads per inch, and the warp shall be 50 ± 1 threads per inch. The CDP provisions included herein shall be taken as only applicable to bearing pads up to 2 in. in total thickness.

CDP is made of elastomers with hardness and properties similar to that used for PEP and FGP. However, the closely spaced layers of duck fabric reduce the indentation and increase the hardness of the finished pad to the 85 to 95 durometer range. Appendix X of AASHTO M 251 contains provisions for hardness of elastomers, but not finished CDP. The acceptable range from the specified value for hardness of elastomers is ±5 points on the Shore A scale. The acceptable range criteria for elastomers in AASHTO M 251 may also be considered for finished CDP. The cotton-duck requirements are restated from the military specification because the reinforcement is essential to the good performance of these pads.

Table 14.7.6.2-1 Correlated Material Properties

	Hardness (Shore A)		
	50	60	70[1]
Shear Modulus @ 73°F (ksi)	0.095–0.130	0.130–0.200	0.200–0.300
Creep deflection @ 25 years divided by initial deflection	0.25	0.35	0.45

[1] For PEP and FGP only.

14.7.6.3 Design Requirements

14.7.6.3.1 Scope

Steel-reinforced elastomeric bearings may be designed in accordance with this article, in which case they qualify for the test requirements appropriate for elastomeric pads. For this purpose, they shall be treated as FGP.

The provisions for FGP apply only to pads where the fiberglass is placed in double layers 0.125 in. apart.

The physical properties of neoprene and natural rubber used in these bearings shall conform to AASHTO M 251.

C14.7.6.3.1

The design methods for elastomeric pads are simpler and more conservative than those for steel-reinforced bearings, so the test methods are less stringent than those of Article 14.7.5. Steel-reinforced elastomeric bearings may be made eligible for these less stringent testing procedures by limiting the compressive stress as specified in Article 14.7.6.3.2.

The three types of pad, PEP, FGP, and CDP behave differently, so information relevant to the particular type of pad should be used for design. For example, in PEP, slip at the interface between the elastomer and the material on which it is seated or loaded is dependent on the friction coefficient, and this will be different for pads seated on concrete, steel, grout, epoxy, etc.

14.7.6.3.2 Compressive Stress

At the service limit state, the average compressive stresses, σ_s and σ_L, in any layer shall satisfy:

- For PEP:

$$\sigma_s \leq 0.80 \text{ ksi} \qquad (14.7.6.3.2\text{-}1)$$

C14.7.6.3.2

In FGP, the compressive stress is limited to G times the effective shape factor. Both PEP and FGP are limited to 800 psi for all circumstances, but this upper bound stress limit can be achieved with a thicker rubber layer with FGP.

The CDP stress limits were developed to provide

- For FGP:

$\cancel{\sigma_s \leq 1.00GS}$

$\sigma_s \leq 1.00GS_l$ and (14.7.6.3.2-2)

$\sigma_s \leq 0.80$ ksi (14.7.6.3.2-3)

- For CDP:

$\sigma_s \leq 3.0$ ksi and (14.7.6.3.2-4)

$\sigma_L \leq 2.0$ ksi (14.7.6.3.2-5)

where:

σ_s = average compressive stress due to total load from applicable service load combinations in Table 3.4.1-1 (ksi)

σ_L = average compressive stress at the service limit state (load factor = 1.0) due to live load (ksi)

In FGP, the value of S_l used shall be **based upon an h_{ri} layer thickness which equals** ~~that for~~ the greatest distance between ~~the~~ midpoint**s** of **two** double **fiberglass** reinforcement layers ~~at the top and bottom of the elastomer layer~~.

For steel-reinforced elastomeric bearings designed in accordance with the provisions of this article:

$\cancel{\sigma_s \leq 1.0GS}$ $\sigma_s \leq 1.25GS_l$ and (14.7.6.3.2-6)

$\cancel{\sigma_s \leq 1.0\text{ ksi}}$ $\sigma_s \leq 1.25$ ksi (14.7.6.3.2-7)

where the value of S_l used shall be that **of an internal** ~~for the thickest~~ layer of the bearing.

These stress limits may be increased by 10 percent where shear deformation is prevented.

14.7.6.3.3 Compressive Deflection

In addition to the provisions of Article 14.7.5.3.6~~3~~, the following shall also apply.

In lieu of using specific product data, the compressive deflection of a FGP should be taken as 1.5 times the deflection estimated for steel-reinforced bearings of the same shape factor in Article 14.7.5.3.6~~3~~.

The initial compressive deflection of a PEP or **an internal** ~~in any~~ layer of a steel-reinforced elastomeric bearing at the service limit state without impact shall not exceed $0.07h_{ri}$, **where h_{ri} is the thickness of a PEP, or the thickness of an internal layer of a steel-reinforced elastomeric bearing in in.**

long term serviceability and durability. CDP stiffness and behavior is less sensitive to shape factor. The total maximum compressive stress is limited to 3.0 ksi because experiments showed that CDP do not fail under monotonically compressive stress values significantly larger than this stress limit. CDP, which is subject to compressive stress levels larger than 3.0 ksi, may delaminate under dynamic loadings typical of those experienced by bridge bearings. CDP may experience dramatic failure when maximum compressive strains exceed approximately 0.25. However, bearing pads which meet the strain and stiffness limits which are required by the military specification will not achieve this failure strain under pure compressive load. The live load stresses are limited to 2.0 ksi, because research shows that delamination is caused by the compressive stress range as well as the maximum compressive level. Live loads control the maximum compressive stress range under repeated loading, and this limit controls the adverse effects of this delamination. Larger compressive strains would result in increased damage to the bridge and the bearing pad and reduced serviceability of the CDP (***Lehman et al., 2003*** ~~Lehman, et al. 2003~~).

The reduced stress limit for steel-reinforced elastomeric bearings designed in accordance with these provisions is invoked in order to allow these bearings to be eligible for the less stringent test requirements for elastomeric pads.

C14.7.6.3.3

The compressive deflection with PEP, FGP, and CDP will be larger and more variable than those of steel-reinforced elastomeric bearings. Appropriate data for these pad types may be used to estimate their deflections. In the absence of such data, the compressive deflection of a PEP and FGP may be estimated at 3 and 1.5 times, respectively, the deflection estimated for steel-reinforced bearings of the same shape factor in Article 14.7.5.3.6~~3~~.

Figure C1 provides design aids for determining the strain in an elastomer layer for steel reinforced bearings based upon durometer hardness and shape factor.

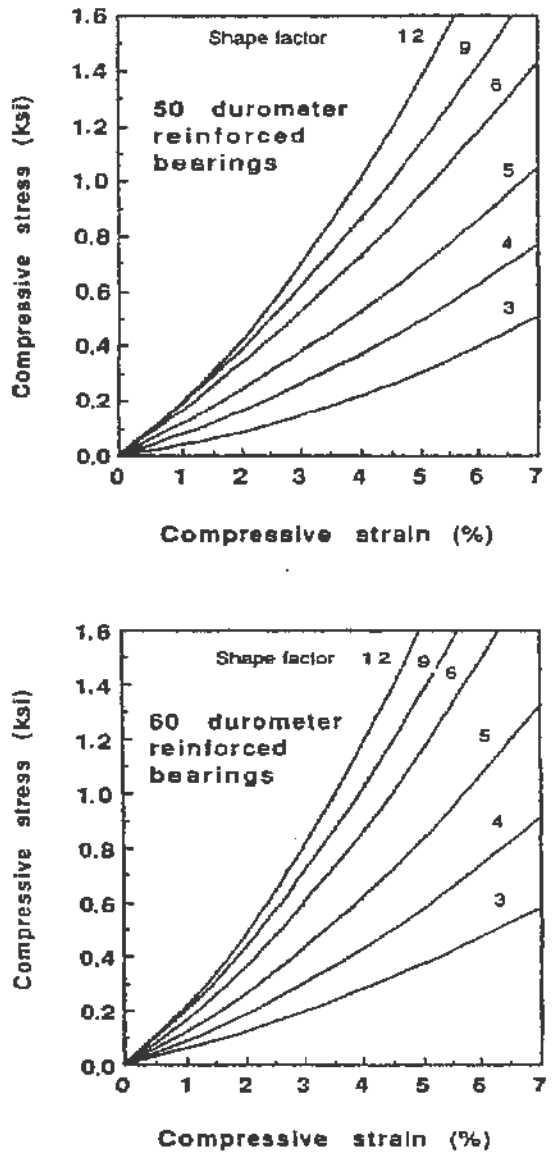

Figure C14.7.6.3.3-1 Stress-Strain Curves.

For CDP, the computed compressive strain, ε_s, may be taken as:

$$\varepsilon_s = \frac{\sigma_s}{E_c} \qquad (14.7.6.3.3\text{-}1)$$

where:

E_c = uniaxial compressive stiffness of the CDP bearing pad. It may be taken as 30 ksi in lieu of pad specific test data (ksi)

σ_s = average compressive stress due to total load from applicable service load combinations in Table 3.4.1-1 (ksi)

CDP is typically very stiff in compression. The shape factor may be computed, but it has a different meaning and less significance to the compressive deflection than it does for FGP and PEP (*Roeder et al., 2000*). As a result, the maximum compressive deflection for CDP can be based upon an average compressive strain, ε_s, for the total bearing pad thickness as computed in Eq. 1.

14.7.6.3.4 Shear

The maximum horizontal superstructure displacement shall be computed in accordance with Article 14.4. The maximum shear deformation of the pad at the service limit state, Δ_S, shall be taken as the maximum horizontal superstructure displacement, reduced to account for the pier flexibility and modified for construction procedures. If a low friction sliding surface is used, Δ_S need not be taken to be larger than the deformation corresponding to first slip.

The provisions of Article 14.7.5.3.24 shall apply, except that the pad shall be designed as follows:

- For PEP, FGP and steel-reinforced elastomeric bearings:

$$h_{rt} \geq 2\Delta_S \qquad (14.7.6.3.4\text{-}1)$$

- For CDP:

$$h_{rt} \geq 10\Delta_S \qquad (14.7.6.3.4\text{-}2)$$

where:

h_{rt} = smaller of total elastomer or bearing thickness (in.)

Δ_S = maximum total shear deformation of the bearing from applicable service load combinations in Table 3.4.1-1 (in.)

The shear modulus, G, for CDP for determination of the bearing force in Article 14.6.3.1 may be conservatively estimated as:

$$G = 2\sigma_s \geq 2.0\,\text{ksi} \qquad (14.7.6.3.4\text{-}3)$$

where:

σ_s = average compressive stress due to total load from applicable service load combinations in Table 3.4.1-1 (ksi)

C14.7.6.3.4

The deformation in PEP and FGP are limited to $\pm 0.5\,h_{rt}$ because these movements are the maximum tolerable for repeated and long-term strains in the elastomer. These limits are intended to ensure serviceable bearings with no deterioration of performance and they limit the forces that the pad transmits to the structure.

In CDP, the shear deflection is limited to only 1/10 of the total elastomer thickness. There are several reasons for this limitation. First, experiments show that CDP may split and crack at larger shear strains. Second, CDP has much larger shear stiffness than that noted with steel reinforced elastomeric bearings, PEP and FGP, and so the strain limit assures that CDP pads do not cause dramatically larger bearing forces to the structure than do other bearing systems. Third, the greater shear stiffness means that relative slip between the CDP and the bridge girders is likely if the deformation required of the bearing is too large. Slip may lead to abrasion and deterioration of the pads, as well as other serviceability concerns. Slip may also lead to increased costs because of anchorage and other requirements. Finally, CDP pads are harder than PEP and FGP, and so they are very suitable for the addition of PTFE sliding surfaces to accommodate the required bridge movements. As a result, CDP with large translational movements are invariably designed with PTFE sliding surfaces.

14.7.6.3.5 Rotation

14.7.6.3.5a General

The provisions of these articles shall apply at the service limit state. Rotations shall be taken as the maximum sum of the effects of initial lack of parallelism and subsequent girder end rotation due to imposed loads and movements. Stress shall be the maximum stress associated with the load conditions inducing the maximum rotation.

C14.7.6.3.5a

Rotation of steel-reinforced elastomeric bearings and elastomeric pads is controlled by preventing uplift between the bearing and the structure and by limiting the shear strains in the elastomer.

Initial lack of parallelism is due to profile grade, dead load deflection, etc. The designer may account for the initial lack of parallelism by providing tapered plates or other means.

14.7.6.3.5b Rotation of PEP

- Rectangular pads shall satisfy:

$$\sigma_s \geq 0.5GS\left(\frac{L}{h_{rt}}\right)^2\theta_{s,x} \text{ and} \qquad (14.7.6.3.5b\text{-}1)$$

$$\sigma_s \geq 0.5GS\left(\frac{W}{h_{rt}}\right)^2\theta_{s,z} \qquad (14.7.6.3.5b\text{-}2)$$

- Circular pads shall satisfy:

$$\sigma_s \geq 0.375GS\left(\frac{D}{h_{rt}}\right)^2\theta_s \qquad (14.7.6.3.5b\text{-}3)$$

where:

σ_s = average compressive stress due to total load associated with the maximum rotation from applicable service load combinations in Table 3.4.1-1 (ksi)

G = shear modulus of the elastomer (ksi)

S = shape factor of **PEP** ~~thickest layer of an elastomeric bearing~~

L = **plan dimension of the bearing perpendicular to the axis of rotation under consideration (generally parallel to the global longitudinal bridge axis) (in.)** ~~length of a rectangular elastomeric bearing (parallel to longitudinal bridge axis) (in.)~~

h_{rt} = total elastomer thickness (in.)

W = **plan dimension of the bearing parallel to the axis of rotation under consideration (generally parallel to the global transverse bridge axis) (in.)** ~~width of the bearing in the transverse direction (in.)~~

D = diameter of pad (in.)

θ_s = maximum service limit state design rotation angle about any axis of the pad specified in Article 14.4.2.1 (rad.)

$\theta_{s,x}$ = maximum service limit state design rotation angle specified in Article 14.4.2.1 about transverse axis **(generally parallel to the global transverse bridge axis)** (rad.)

$\theta_{s,z}$ = maximum service limit state design rotation angle specified in Article 14.4.2.1 about longitudinal axis **(generally parallel to the global longitudinal bridge axis)** (rad.)

C14.7.6.3.5b

PEP, FGP, and steel-reinforced elastomeric bearings are quite flexible in compressive loading, and as a consequence very large strains are tolerated, but stresses are kept quite low in Article 14.7.6.3.2. As a consequence, PEP, FGP, and steel-reinforced elastomeric bearings are checked for uplift only, and the equations provided in this article provide a lower bound stress limit to assure that uplift conditions are met.

Total load shall be construed to be all contributing loads beyond parallelism.

14.7.6.3.5c Rotation of CDP

The maximum compressive strain due to combined compression and rotation of CDP at the service limit state, ε_t, shall not exceed:

$$\varepsilon_t = \varepsilon_c + \frac{\theta_s L}{2t_p} < 0.20 \qquad (14.7.6.3.5c\text{-}1)$$

where:

$$\varepsilon_c = \frac{\sigma_s}{E_c} \qquad (14.7.6.3.5c\text{-}2)$$

Maximum rotation shall be limited to:

$$\theta_s \le 0.80\frac{2t_p\varepsilon_c}{L} \text{ and} \qquad (14.7.6.3.5c\text{-}3)$$

$$\theta_L \le 0.20\frac{2t_p\varepsilon_c}{L} \qquad (14.7.6.3.5c\text{-}4)$$

where:

E_c = uniaxial compressive stiffness of the CDP bearing pad. It may be taken as 30 ksi in lieu of pad specific test data.

L = length of a CDP bearing pad in the plane of rotation (in.)

t_p = total thickness of CDP pad (in.)

ε_c = maximum uniaxial strain due to compression under total load from applicable service load combinations in Table 3.4.1-1

ε_t = maximum uniaxial strain due to combined compression and rotation from applicable service load combinations in Table 3.4.1-1

σ_s = average compressive stress due to total load associated with the maximum rotation from applicable service load combinations in Table 3.4.1-1 (ksi)

θ_L = maximum rotation of the CDP pad at the service limit state (load factor = 1.0) due to live load (rad.)

θ_s = maximum rotation of the CDP pad from applicable service load combinations in Table 3.4.1-1 (rad.)

C14.7.6.3.5c

Rotation, and combined compression and rotation of CDP are controlled by shear strain limits and delamination requirements. Experiments show that CDP that meets the testing requirements of MIL-C-882E will not fracture or fail until a combined compressive strain exceeds 0.25. Creep strains do not contribute to this fracture potential. Design Eq. 1 limits this compressive strain to 0.20, because the design is made with service loads, and research shows that the 0.20 strain limit is sufficiently far from the average failure strain to assure a β factor of 3.5 for LRFD design. Delamination due to rotation is associated with uplift or separation between the bearing pad and the load surface. Delamination does not result in a fracture or immediate failure of the bearing pad, but it results in a significant reduction in the bearing service life. Cyclic rotation associated with live loads represents the more severe delamination problem, and Eq. 4 provides this design limit. However, research also shows that delamination is also influenced by maximum rotation level. CDP do not recover all of their compressive deformation after unloading, and Eq. 3 recognizes approximately 20 percent residual compressive strain and limits uplift due to the maximum rotation in recognition of the delamination potential. Shear strains of the elastomer are a less meaningful measure for CDP than for steel reinforced elastomeric bearings, because shape factor has a different meaning for CDP than for other elastomeric bearing types. CDP is known to have relatively large compressive load capacity, and it is generally accepted that it can tolerate relatively large compressive strains associated with these loads. It should be noted that these compressive strains in CDP are larger than those tolerated in steel reinforced bearings, but they have been justified by experimental results for CDP that meets the requirements of this specification. This does not suggest that CDP is generally superior to steel reinforced elastomeric bearings. A well designed steel reinforced bearing is likely to provide superior long term performance, but CDP can be designed and manufactured quickly and may provide good performance under a range of conditions.

14.7.6.3.5d Rotation of FGP and Steel Reinforced Elastomeric Bearings

C14.7.6.3.5d

- Rectangular pads or bearings shall satisfy:

$$\cancel{\sigma_s \geq 0.5GS\left(\frac{L}{h_{ri}}\right)^2 \frac{\theta_{s,z}}{n}} \quad \text{and} \qquad (14.7.6.3.5d\text{-}1)$$

$$\underline{\sigma_s \geq 0.5GS_i\left(\frac{L}{h_{ri}}\right)^2 \frac{\theta_{s,z}}{n}} \quad \text{and} \qquad (14.7.6.3.5d\text{-}1)$$

$$\cancel{\sigma_s \geq 0.5GS\left(\frac{W}{h_{ri}}\right)^2 \frac{\theta_{s,z}}{n}}$$

$$\underline{\sigma_s \geq 0.5GS_i\left(\frac{W}{h_{ri}}\right)^2 \frac{\theta_{s,z}}{n}} \qquad (14.7.6.3.5d\text{-}2)$$

- Circular pads or bearings shall satisfy:

$$\cancel{\sigma_s \geq 0.375GS\left(\frac{D}{h_{ri}}\right)^2 \frac{\theta_s}{n}}$$

$$\underline{\sigma_s \geq 0.375GS_i\left(\frac{D}{h_{ri}}\right)^2 \frac{\theta_s}{n}} \qquad (14.7.6.3.5d\text{-}3)$$

where:

σ_s = **average compressive stress due to total load associated with the maximum rotation from applicable service load combinations in Table 3.4.1-1 (ksi)**

G = **shear modulus of the elastomer (ksi)**

S_i = **shape factor of the ith internal layer of a steel-reinforced elastomeric bearing, or the layer defined by the greatest distance between midpoints of the double reinforcement layers of an FGP**

L = **plan dimension of the bearing perpendicular to the axis of rotation under consideration (generally parallel to the global longitudinal bridge axis) (in.)**

h_{ri} = thickness of ith **internal** elastomeric layer **for a steel-reinforced elastomeric bearing, and the greatest distance between midpoints of the double reinforcement layers for an FGP** (in.)

Refer to Article C14.7.6.3.5b.

n = number of interior layers of elastomer, where interior layers are defined as those layers which are bonded on each face. Exterior layers are defined as those layers which are bonded only on one face. When the thickness of the exterior layer of elastomer is ~~more~~ **equal to or greater** than one-half the thickness of an interior layer, the parameter, n, may be increased by one-half for each such exterior layer.

W = plan dimension of the bearing parallel to the axis of rotation under consideration (generally parallel to the global transverse bridge axis) (in.)

D = diameter of pad (in.)

θ_s = maximum service limit state design rotation angle about any axis of the pad specified in Article 14.4.2.1 (rad.)

$\theta_{s,x}$ = maximum service limit state design rotation angle specified in Article 14.4.2.1 about transverse axis (generally parallel to the global transverse bridge axis) (rad.)

$\theta_{s,y}$ = maximum service limit state design rotation angle specified in Article 14.4.2.1 about longitudinal axis (generally parallel to the global longitudinal bridge axis) (rad.)

14.7.6.3.6 Stability

To ensure stability, the total thickness of the pad shall not exceed the least of $L/3$, $W/3$, or $D/4$.

C14.7.6.3.6

The stability provisions in this article are unlikely to have a significant impact upon the design of PEP, since a plain pad which has this geometry would have such a low allowable stress limit that the design would be uneconomical.

The buckling behavior of FGP and CDP is complicated because the mechanics of their behavior is not well understood. The reinforcement layers lack the stiffness of the reinforcement layers in steel-reinforced bearings and so stability theories developed for steel-reinforced bearings do not apply to CDP or FGP. The geometric limits included here are simple and conservative.

14.7.6.3.7 Reinforcement

The reinforcement in FGP shall be fiberglass with a strength in each plan direction of at least 2.2 h_{ri} in kip/in. For the purpose of this article, if the layers of elastomer are of different thicknesses, h_{ri} shall be taken as the mean thickness of the two layers of the elastomer bonded to the same reinforcement. If the fiberglass reinforcement contains holes, its strength shall be increased over the minimum value specified herein by twice the gross width divided by net width.

Reinforcement for steel-reinforced elastomeric

C14.7.6.3.7

The reinforcement should be strong enough to sustain the stresses induced in it when the bearing is loaded in compression. For a given compression, thicker elastomer layers lead to higher tension stresses in the reinforcement. It should be possible to relate the minimum reinforcement strength to the compressive stress that is allowed in the bearing in Article 14.7.6.3.2. The relationship has been quantified for FGP. For PEP and CDP, successful past experience is the only guide currently available.

bearings designed in accordance with the provisions of this article shall conform to the requirements of Article 14.7.5.3.5~~7~~.

14.7.6.3.8 Seismic and Other Extreme Event Provisions

Expansion bearings designed according to Article 14.7.6 shall be provided with adequate seismic and other extreme event resistant anchorage to resist the horizontal forces in excess of those accommodated by shear in the pad unless the bearing is intended to act as a fuse or irreparable damage is permitted. The provisions of Article 14.7.5.3.7~~8~~ shall also apply as applicable.

For steel-reinforced elastomeric bearings designed in accordance with the provisions of Article 14.7.6, the equations from Article 14.7.5.3.5~~7~~ are used. Although these equations are intended for steel-reinforced bearings with a higher allowable stress, the thickness of reinforcing sheets required is not significantly greater than those required by the old Method A.

14.7.7 Bronze or Copper Alloy Sliding Surfaces

14.7.7.1 Materials

Bronze or copper alloy may be used for:

- Flat sliding surfaces to accommodate translational movements,
- Curved sliding surfaces to accommodate translation and limited rotation, and
- Pins or cylinders for shaft bushings of rocker bearings or other bearings with large rotations.

Bronze sliding surfaces or castings shall conform to AASHTO M 107 (ASTM B 22) and shall be made of Alloy C90500, C91100, or C86300, unless otherwise specified. The mating surface shall be structural steel, which has a Brinell hardness value at least 100 points greater than that of the bronze.

C14.7.7.1

Bronze or copper alloy sliding surfaces have a long history of application in the United States with relatively satisfactory performance of the different materials. However, there is virtually no research to substantiate the properties and characteristics of these bearings. Successful past experience is the best guide currently available.

Historically these bearings have been built from sintered bronze, lubricated bronze, or copper alloy with no distinction between the performance of the different materials. However, the evidence suggests otherwise. Sintered bronze bridge bearings have historically been included in the Standard Specifications. Sintered bronze is manufactured with a metal powder technology, which results in a porous surface structure that is usually filled with a self-lubricating material. There do not appear to be many manufacturers of sintered bronze bridge bearings at this time, and there is some evidence that past bridge bearings of this type have not always performed well. As a result, there is no reference to sintered bronze herein.

Lubricated bronze bearings are produced by a number of manufacturers, and they have a relatively good history of performance. The lubrication is forced into a pattern of recesses, and the lubrication reduces the friction and prolongs the life of the bearing. Plain bronze or copper lacks this self-lubricating quality and would appear to have poorer bearing performance. Some jurisdictions use the following guidelines for lubricant recesses (*FHWA, 1991*):

- The bearing surfaces should have lubricant recesses consisting of either concentric rings, with or without central circular recesses with a depth at least equal to the width of the rings or recesses.

- The recesses or rings should be arranged in a geometric pattern so that adjacent rows overlap in the direction of motion.
- The entire area of all bearing surfaces that have provision for relative motion should be lubricated by means of the lubricant-filled recesses.
- The lubricant-filled areas should comprise not less than 25 percent of the total bearing surface.
- The lubricating compound should be integrally molded at high pressure and compressed into the rings or recesses and project not less than 0.010 in. above the surrounding bronze plate.

Bronze or copper alloy sliding expansion bearings shall be evaluated for shear capacity and stability under lateral loads.

Bronze or copper-alloy sliding expansion bearings should be evaluated for stability. The sliding plates inset into the metal of the pedestals or sole plates may lift during high horizontal loading. Guidelines for bearing stability evaluations may be found in Gilstad (*1990*). The shear capacity and stability may be increased by adding anchor bolts inserted through a wider sole plate and set in concrete.

The mating surface shall be made of steel and be machined to match the geometry of the bronze surface so as to provide uniform bearing and contact.

The mating surface is commonly manufactured by a steel fabricator rather than by the bearing manufacturer who produces the bronze surface. This contractual arrangement is discouraged because it can lead to a poor fit between the two components. The bronze is weaker and softer than the steel, and fracture and excessive wear of the bronze may occur if there is inadequate quality control.

14.7.7.2 Coefficient of Friction

The coefficient of friction may be determined by testing. In lieu of such test data, the design coefficient of friction may be taken as 0.1 for self-lubricating bronze components and 0.4 for other types.

C14.7.7.2

The best available experimental evidence suggests that lubricated bronze can achieve a coefficient of friction on the order of 0.07 during its early life, while the lubricant projects above the bronze surface. The coefficient of friction is likely to increase to approximately 0.10 after the surface lubrication wears away and the bronze starts to wear down into the recessed lubricant. Copper alloy or plain bronze would cause considerably higher friction. In the absence of better information, conservative coefficients of friction of 0.1 and 0.4, respectively, are recommended for design.

14.7.7.3 Limit on Load

The nominal bearing stress due to combined dead and live load at the service limit state shall not exceed the values given in Table 1.

Table 14.7.7.3-1 Bearing Stress at the Service Limit State.

AASHTO M 107 (ASTM B 22) Bronze Alloy	Bearing Stress (ksi)
C90500—Type 1	3.0

C91100—Type 2	3.0
C86300—Type 3	12.0

14.7.7.4 Clearances and Mating Surfaces

The mating surface shall be steel that is accurately machined to match the geometry of the bronze surface and to provide uniform bearing and contact.

14.7.8 Disc Bearings

14.7.8.1 General

The dimensions of the elements of a disc bearing shall be such that hard contact between metal components, which prevents further displacement or rotation, will not occur under the least favorable combination of design displacements and rotations at the strength limit state.

The disc bearing shall be designed for the maximum strength limit state design rotation, θ_u, specified in Article 14.4.2.2.2.

For the purpose of establishing the forces and deformations imposed on a disc bearing, the axis of rotation may be taken as lying in the horizontal plane at midheight of the disc. The urethane disc shall be held in place by a positive location device.

Limiting rings may be used to partially confine the elastomer against lateral expansion. They may consist of steel rings welded to the upper and lower plates or a circular recess in each of those plates.

If a limiting ring is used, the depth of the ring should be at least $0.03D_d$, where D_d is the diameter of the disk element.

C14.7.8.1

A disc bearing functions by deformation of a polyether urethane disc, which should be stiff enough to resist vertical loads without excessive deformation and yet be flexible enough to accommodate the imposed rotations without liftoff or excessive stress on other components, such as PTFE. The urethane disc should be positively located to prevent its slipping out of place.

The primary concerns are that clearances should be maintained and that binding should be avoided even at extreme rotations. The vertical deflection, including creep, of the bearing should be taken into account.

θ_u may also be considered at the extreme event limit state.

The depth of the limiting ring should be at least $0.03D_d$ to prevent possible overriding by the urethane disc under extreme rotation conditions.

14.7.8.2 Materials

The elastomeric disc shall be made from a compound based on polyether urethane, using only virgin materials. The hardness shall be between 45 and 65 on the Shore D scale.

The metal components of the bearing shall be made from structural steel conforming to AASHTO M 270 or M 183 (ASTM A 709), Grade 36, 50, or 50W or from stainless steel conforming to ASTM A 240.

C14.7.8.2

AASHTO LRFD Bridge Construction Specifications, Article 18.3.2, recognizes two polyether urethane compounds that have performed satisfactorily.

Polyether urethane can be compounded to provide a wide range of hardnesses. The appropriate material properties must be selected as an integral part of the design process because the softest urethanes may require a limiting ring to prevent excessive compressive deflection, whereas the hardest ones may be too stiff and cause too high a resisting moment. Also, harder elastomers generally have higher ratios of creep to elastic deformation.

AASHTO M 270 (ASTM A 709), Grades 100 and 100W steel should be used only where their reduced ductility will not be detrimental.

14.7.8.3 Elastomeric Disc

The elastomeric disc shall be held in location by a positive locator device.

At the service limit state, the disc shall be designed so that:

- Its instantaneous deflection under total load does not exceed ten percent of the thickness of the unstressed disc, and the additional deflection due to creep does not exceed eight percent of the thickness of the unstressed disc;
- The components of the bearing do not lift off each other at any location; and
- The average compressive stress on the disc does not exceed 5.0 ksi. If the outer surface of the disc is not vertical, the stress shall be computed using the smallest plan area of the disc.

If a PTFE slider is used, the stresses on the PTFE slider shall not exceed the values for average and edge stresses given in Article 14.7.2.4 for the service limit state. The effect of moments induced by the urethane disc shall be included in the stress analysis.

C14.7.8.3

The primary concerns are that clearances should be maintained and that binding should be avoided even at extreme rotations. The vertical deflection, including creep, of the bearing should be taken into account.

Design of the urethane disc may be based on the assumption that it behaves as a linear elastic material, unrestrained laterally at its top and bottom surfaces. The estimates of resisting moments, so calculated, will be conservative, because they ignore creep, which reduces the moments. However, the compressive deflection due to creep should also be accounted for. Limiting rings stiffen the bearing in compression because they make the bearing behave more like a confined elastomeric bearing, i.e., a pot bearing. Their influence is conservatively ignored in the linear elastic design approach. Subject to the approval of the Engineer, design methods based on test data are permitted.

No liftoff of components can be tolerated; therefore, any uplift restraint device should have sufficiently small vertical slack to ensure the correct location of all components when the compressive load is reapplied.

Rotational experiments have shown that uplift occurs at relatively small moments and rotations in disc bearings. There are concerns that this could lead to edge loading on PTFE sliding surfaces and increase the potential for damage to the PTFE. Bearings passing the test requirements of Article 18.3.4.3.1 of the LRFD Bridge Construction Specification should assure against any damage to the PTFE.

14.7.8.4 Shear Resisting Mechanism

In fixed and guided bearings, a shear-resisting mechanism shall be provided to transmit horizontal forces between the upper and lower steel plates. It shall be capable of resisting a horizontal force in any direction equal to the larger of the design shear force at the strength and extreme event limit states or 15 percent of the design vertical load at the service limit state.

The horizontal design clearance between the upper and lower components of the shear-restricting mechanism shall not exceed the value for guide bars given in Article 14.7.9.

C14.7.8.4

The shear resisting device may be placed either inside or outside the urethane disc. If shear is carried by a separate transfer device external to the bearing, such as opposing concrete blocks, the bearing itself may be unguided.

In unguided bearings, the shear force that should be transmitted through the body of the bearing is μP, where μ is the coefficient of friction of the PTFE slider and P is the vertical load on the bearing. This may be carried by the urethane disc without a separate shear-resisting device, provided that the disc is held in place by positive locating devices, such as recesses in the top and bottom plates.

The 15 percent factor applied to the service limit state vertical load approximates a strength limit state horizontal design force.

Maximum extreme event limit state forces should be considered when the bearing is not intended to act as a fuse or irreparable damage is not permitted.

14.7.8.5 Steel Plates

The provisions of Sections 3, 4, and 6 of these Specifications shall apply as appropriate.

The thickness of each of the upper and lower steel plates shall not be less than 0.045 D_d, where D_d is the diameter of the disk element, if it is in direct contact with a steel girder or distribution plate, or 0.06 D_d if it bears directly on grout or concrete.

C14.7.8.5

The plates should be thick enough to uniformly distribute the concentrated load in the bearing. Distribution plates should be designed in accordance with Article 14.8.

14.7.9 Guides and Restraints

14.7.9.1 General

Guides may be used to prevent movement in one direction. Restraints may be used to permit only limited movement in one or more directions. Guides and restraints shall have a low-friction material at their sliding contact surfaces.

C14.7.9.1

Guides are frequently required to control the direction of movement of a bearing. If the horizontal force becomes too large to be carried reliably and economically on a guided bearing, a separate guide system may be used.

14.7.9.2 Design Loads

Guides or restraints shall be designed at the strength limit state for the larger of either:

- The horizontal force from applicable strength load combinations specified in Table 3.4.1-1, or
- 15 percent of the total vertical force from applicable service load combinations specified in Table 3.4.1-1acting on all the bearings at the bent divided by the number of guided bearings at the bent.

Guides and restraints shall be designed for applicable seismic or other extreme event forces using the extreme event limit state load combination of Table 3.4.1-1 and, in the case of seismic, the provisions in Article 3.10.9.

C14.7.9.2

The minimum horizontal design load, taken as ten percent of the factored vertical load, is intended to account for responses that cannot be calculated reliably, such as horizontal bending or twisting of a bridge deck caused by nonuniform or time-dependent thermal effects.

Large ratios of horizontal to vertical load can lead to bearing instability, in which case a separate guide system should be considered.

The 15 percent factor applied to the service limit state vertical load approximates a strength limit state horizontal design force.

Maximum extreme event limit state forces should be considered when the bearing is not intended to act as a fuse or irreparable damage is not permitted.

14.7.9.3 Materials

For steel bearings, the guide or restraint shall be made from steel conforming to AASHTO M 270 (ASTM A 709), Grades 36, 50, or 50W or stainless steel conforming to ASTM A 240. For aluminum bearings, the guide may also be aluminum.

The low-friction interface material shall be approved by the Engineer.

C14.7.9.3

Many different low-friction materials have been used in the past. Because the total transverse force at a bent is usually smaller than the total vertical force, the guides may contribute less toward the total longitudinal friction force than the primary sliding surfaces. Thus, material may be used that is more robust but causes higher friction than the primary material. Filled PTFE is common, and other proprietary materials, such as PTFE-impregnated metals, have proven effective.

14.7.9.4 Geometric Requirements

Guides shall be parallel, long enough to accommodate the full design displacement of the bearing in the sliding direction, and shall permit a minimum of 0.03125-in. and a maximum of 0.0625-in. free slip in the restrained direction. Guides shall be designed to avoid binding under all design loads and displacements, including rotation.

C14.7.9.4

Guides must be parallel to avoid binding and inducing longitudinal resistance. The clearances in the transverse direction are fairly tight and are intended to ensure that excessive slack does not exist in the system. Free transverse slip has the advantage that transverse restraint forces are not induced, but if this is the objective a nonguided bearing is preferable. On the other hand, if applied transverse loads are intended to be shared among several bearings, free slip causes the load to be distributed unevenly, possibly leading to overloading of one guide.

14.7.9.5 Design Basis

14.7.9.5.1 Load Location

The horizontal force acting on the guide or restraint shall be assumed to act at the centroid of the low-friction interface material. Design of the connection between the guide or restraint and the body of the bearing system shall consider both shear and the overturning moments so caused.

The design and detailing of bearing components resisting lateral loads, including seismic and other extreme event loads determined as specified in Article 14.6.3.1, shall provide adequate strength and ductility. Guide bars and keeper rings or nuts at the ends of pins and similar devices shall either be designed to resist all imposed loads or an alternative load path shall be provided that engages before the relative movement of the substructure and superstructure is excessive.

C14.7.9.5.1

Guides are often bolted to the slider plate to avoid welding distortions. Horizontal forces applied to the guide cause some overturning moment, which must be resisted by the bolts in addition to shear. The tension in the bolt can be reduced by using a wider guide bar. If high-strength bolts are used, the threaded hole in the plate should be deep enough to develop the full tensile strength of the bolt.

Some press-fit guide bar details in common use have proven unsatisfactory in resisting horizontal loads. When analyzing such designs, consideration should be given to the possibility of rolling the bar in the recess (*SCEF, 1991*).

Where guide bars are recessed into a machined slot, tolerances should be specified to provide a press fit. The guide bar should also be welded or bolted to resist overturning.

Past earthquakes have shown that guide and keeper bars and keeper rings or nuts at the ends of pins and other guiding devices have failed, even under moderate seismic loads. In an experimental investigation of the strength and deformation characteristics of rocker bearings (*Mander et al., 1993*), it was found that adequately sized pintles are sometimes capable of providing the necessary resistance to seismic loads.

14.7.9.5.2 Contact Stress

The contact stress on the low-friction material shall not exceed that recommended by the manufacturer. For PTFE, the stresses at the service limit state shall not exceed those specified in Table 14.7.2.4-1 under sustained loading or 1.25 times those stresses for short-term loading.

C14.7.9.5.2

Appropriate compressive stresses for proprietary materials should be developed by the Manufacturer and approved by the Engineer on the basis of test evidence. Strength, cold flow, wear, and friction coefficient should be taken into consideration.

On conventional materials, higher stresses are allowed for short-term loading because the limitations in Table 14.7.2.4-1 are based partly on creep considerations. Short-term loading includes wind, earthquake, etc., but not thermal or gravity effects.

14.7.9.6 Attachment of Low-Friction Material

The low-friction material shall be attached by at least any two of the following three methods:

- Mechanical fastening,
- Bonding, and
- Mechanical interlocking with a metal substrate.

C14.7.9.6

Some difficulties have been experienced where PTFE is attached to the metal backing plates by bonding alone. Ultra-violet light attacks the PTFE surface that is etched prior to bonding, and this has caused bond failures. Thus, at least two separate methods of attachment are required. Mechanical fasteners should be countersunk to avoid gouging the mating surface.

14.7.10 Other Bearing Systems

Bearing systems made from components not specified in Articles 14.7.1 through 14.7.9 may also be used, subject to the approval of the Engineer. Such bearings shall be adequate to resist the forces and deformations imposed on them at the service and strength limit states without material distress and without inducing deformations detrimental to their proper functioning. At the extreme event limit state, bearings which are designed to act as fuses or sustain irreparable damage may be permitted by the Owner provided loss of span is prevented.

The dimensions of the bearing shall be chosen to provide for adequate movements at all times. Materials shall have sufficient strength, stiffness, and resistance to creep and decay to ensure the proper functioning of the bearing throughout the design life of the bridge.

The Engineer shall determine the tests that the bearing shall satisfy. The tests shall be designed to demonstrate any potential weakness in the system under individual compressive, shear, or rotational loading or combinations thereof. Testing under sustained and cyclic loading shall be required.

C14.7.10

Tests cannot be prescribed unless the nature of the bearing is known. In appraising an alternative bearing system, the Engineer should plan the test program carefully because the tests constitute a larger part of the quality assurance program than is the case with more widely used bearings.

In bearings that rely on elastomeric components, aspects of behavior, such as time-dependent effects, response to cyclic loading, temperature sensitivity, etc., should be investigated.

Some bearing tests are very costly to perform. Other bearing tests cannot be performed because there is no available test equipment in the United States. At the present time, the largest U.S. facility for testing bearings in combined axial load and shear is the Seismic Response Modification Device Test Facility at the University of California, San Diego constructed by Caltrans. This facility can test bearings of all kinds up to 12,000-kip axial load capacity and 2,000-kip transverse load capacity (HITEC 2002). Nevertheless, the following test requirements should be carefully considered before specifying them (*SCEF, 1991*):

- Vertical loads exceeding 5,000 kips,
- Horizontal loads exceeding 500 kips,
- The simultaneous application of horizontal and vertical load where the horizontal load exceeds 75 percent of the vertical load,
- Triaxial test loading,
- The requirement for dynamic rotation of the test bearing while under vertical load, and
- Coefficient of friction test movements with normal loads greater than 250 kips.

14.8 LOAD PLATES AND ANCHORAGE FOR BEARINGS

14.8.1 Plates for Load Distribution

The bearing, together with any additional plates, shall be designed so that:

- The combined system is stiff enough to prevent distortions of the bearing that would impair its proper functioning when subjected to service and strength limit state loadings, and maximum extreme event loadings when required;
- The stresses imposed on the supporting structure satisfy the limits specified by the Engineer and Sections 5, 6, 7, or 8; and
- The bearing can be replaced within the jacking height limits specified by the Engineer without damage to the bearing, distribution plates, or supporting structure. If no limit is given, a height of 0.375 in. shall be used.

Resistance of steel components shall be determined in accordance with Section 6.

In lieu of a more refined analysis, the load from a bearing fully supported by a grout bed may be assumed to distribute at a slope of 1.5:1, horizontal to vertical, from the edge of the smallest element of the bearing that resists the compressive load.

The use and design of bearing stiffeners on steel girders shall comply with Section 6.

Sole plate and base plate connections shall be adequate to resist lateral loads at the strength limit state. These connections shall also be adequate to resist the maximum seismic and other extreme event lateral loads unless the bearings are designed to act as fuses or sustain irreparable damage. Sole plates shall be extended to allow for anchor bolt inserts, when required.

C14.8.1

Large forces may be concentrated in a bearing that must be distributed so as not to damage the supporting structure. In general, metal rocker and roller bearings cause the most concentrated loads, followed by pots, discs, and sphericals, whereas elastomeric bearings cause the least concentrated loads. Masonry plates may be required to prevent damage to concrete or grout surfaces.

Many simplified methods have been used to design masonry plates, some based on strength and some on stiffness. Several studies have indicated that masonry plates are less effective in distributing the load than these simplified methods would suggest, but the cost of heavy load distribution plates would be considerable (*McEwen and Spencer, 1981; Saxena and McEwen, 1986*). The present design rules represent an attempt to provide a uniform basis for design that lies within the range of traditional methods. Design based on more precise information, such as finite element analysis, is preferable but may not be practical in many cases.

Some types of bearings were only developed in the last 20 or 30 years, so their longevity has yet to be proven in the field. Hence the requirement for bearing replaceability.

One common way to provide for replacement is to use a masonry plate, attached to the concrete pier head by embedded anchors or anchor bolts. The bearing can then be attached to the masonry plate by seating it in a machined recess and bolting it down. The bridge needs then to be lifted only through a height equal to the depth of the recess in order to replace the bearing. The deformation tolerance of joints and seals, as well as the stresses in the structure, should be considered in determining the allowable jacking height.

14.8.2 Tapered Plates

If, under full permanent load at the mean annual temperature for the bridge site (at the service limit state with all load factors equal to 1.0), the inclination of the underside of the girder to the horizontal exceeds 0.01 rad., a tapered plate shall be used in order to provide a level surface.

C14.8.2

Tapered plates may be used to counteract the effects of end slope in a girder. In all but short-span bridges, the dead load will dominate the forces on the bearing, so the tapered plate should be designed to provide zero rotation of the girder under this condition. The limit of 0.01 rad. out of level corresponds to the 0.01 rad. component, which is required in the design rotation in Article 14.4.

14.8.3 Anchorage and Anchor Bolts

14.8.3.1 General

All load distribution plates and bearings with external steel plates shall be positively secured to their supports by bolting or welding.

All girders shall be positively secured to supporting bearings by a connection that can resist the horizontal forces that may be imposed on it unless fusing or irreparable damage is permitted at the extreme event limit state. Separation of bearing components shall not be permitted at the strength limit state. Connections shall resist the least favorable combination of loads at the strength limit state and shall be installed wherever deemed necessary to prevent separation.

Trusses, girders, and rolled beams shall be securely anchored to the substructure. Where possible, anchor bolts should be cast in substructure concrete, otherwise anchor bolts may be grouted in place. Anchor bolts may be swedged or threaded to secure a satisfactory grip upon the material used to embed them in the holes.

The resistance of the anchor bolts shall be adequate for loads at the strength limit state and for the maximum loads at the extreme event limit state unless the bearings are designed to act as fuses or sustain irreparable damage.

The tensile resistance of anchor bolts shall be determined as specified in Article 6.13.2.10.2.

The shear resistance of anchor bolts and dowels shall be determined as specified in Article 6.13.2.12.

The resistance of anchor bolts in combined tension and shear shall be determined as specified in Article 6.13.2.11.

The bearing resistance of the concrete shall be taken as specified in Article 5.7.5. The modification factor, *m*, shall be based on a nonuniformly distributed bearing stress.

14.8.3.2 Seismic and Other Extreme Event Design and Detailing Requirements

Sufficient reinforcement shall be provided around the anchor bolts to develop the level of horizontal forces considered at the extreme event limit state and anchor them into the mass of the substructure unit. Potential concrete crack surfaces next to the bearing anchorage shall be identified and their shear friction capacity evaluated as required.

C14.8.3.1

Bearings should be anchored securely to the support to prevent their moving out of place during construction or over the life of the bridge. Elastomeric bearings may be left without anchorage if adequate friction is available. A design coefficient of friction of 0.2 may be assumed between elastomer and clean concrete or steel.

Girders may be located on bearings by bolts or pintles. The latter provide no uplift capacity. Welding may be used, provided that it does not cause damage to the bearing or difficulties with replacement.

Uplift should be prevented both among the major elements, such as the girder, bearing, support, and between the individual components of a bearing. If it was allowed to occur, some parts of the structure could be misaligned when contact was regained, causing damage.

Anchor bolts are very susceptible to brittle failure during earthquakes or other extreme events. To increase ductility, it has been recommended in Astaneh-Asl et al. (*1994*) to use upset anchor bolts placed inside hollow sleeve pipes and oversized holes in the masonry plate. Thus, deformable bearing types may use the anchor bolts as the ductile element (*Cook and Klingner, 1992*).

Bearings designed for rigid load transfer, especially at the extreme event limit state, should not be seated on grout pads or other bedding materials that can create a sliding surface and reduce the horizontal resistance.

Seismic loading of the anchor bolts has often resulted in concrete damage, especially when they were too close to the edge of the bearing seat. Guidelines for evaluating edge distance effects and concrete strength requirements may be found in Ueda et al. (*1990*), among others.

For global design of anchorages to concrete, refer to *Building Code Requirements for Structural Concrete* (ACI 318-05), Appendix D.

As an approximation, the bearing stress may be assumed to vary linearly from zero at the end of the embedded length to its maximum value at the top surface of concrete.

14.9 CORROSION PROTECTION

All exposed steel parts of bearings not made from stainless steel shall be protected against corrosion by zinc metalization, hot-dip galvanizing, or a paint system approved by the Engineer. A combination of zinc metalization or hot-dip galvanizing and a paint system may be used.

C14.9

The use of stainless steel is the most reliable protection against corrosion because coatings of any sort are subject to damage by wear or mechanical impact. This is particularly important in bearings where metal-to-metal contact is inevitable, such as rocker and roller bearings. Weathering steel is excluded because it forms an oxide coating that may inhibit the proper functioning of the bearing.

When using hot-dip galvanizing for corrosion protection, several factors must be considered. Embrittlement of very high-strength fasteners, such as AASHTO M 253 (ASTM A 490) bolts, may occur due to acid cleaning (pickling) before galvanizing, and quenched and tempered material, such as Grade 70W and 100W, may undergo changes in mechanical properties, so galvanizing these should be avoided (see ASTM A 143 on avoiding embrittlement). With good practice, commonly used steels, such as Grades 36, 50, and 50W, should not be adversely affected if their chemistry and the assembly's details are compatible (see ASTM A 385 on ensuring high-quality coating). Certain types of bearings, such as intricate pot or spherical bearings, are not suitable for hot-dip galvanizing.

REFERENCES

AASHTO. 1999. *Guide Specifications for Seismic Isolation Design*, 2nd Edition. American Association of State Highway and Transportation Officials, Washington, DC.

AASHTO. 2002. *Standard Specifications for Highway Bridges*, 17th Edition, HB-17. American Association of State Highway and Transportation Officials, Washington, DC.

ACI. 1999. *Building Code Requirements for Structural Concrete*, 318-99 and Commentary. 318R-99. American Concrete Institute, Farmington Hills, MI.

ACI. 2005. *Building Code Requirements for Structural Concrete*, 318-05. American Concrete Institute, Farmington Hills, MI.

Astaneh-Asl, A., B. Bolt, K. M. McMullin, R. R. Donikian, D. Modjtahedi, and S. Cho. 1994. *Seismic Performance of Steel Bridges During the 1994 Northridge Earthquake*. Report No. UCB/CE-STEEL-94/01. Report to the California Department of Transportation, April 1994.

Campbell, T. I., and W. L. Kong. 1987. *TFE Sliding Surfaces in Bridge Bearings*. Report ME-87-06. Ontario Ministry of Transportation and Communications, Downsview, ON.

Cook, A.R., and R. E. Klingner. 1992. "Ductile Multiple-Anchor Steel-to-Concrete Connections." *Journal of Structural Engineering*, American Society of Civil Engineers, New York, NY, Vol. 118, No. 6, June 1992, pp. 1645–1665.

Crozier, W. F., J. R. Stoker, V. C. Martin, and E. F. Nordlin. 1979. *A Laboratory Evaluation of Full-Size Elastomeric Bridge Bearing Pads*. Research Report CA DOT, TL-6574-1-74-26. Highway Research Report, Washington, DC, June 1979.

Dexter, R. J., R. J. Connor, and M. R. Kaczinski. 1997. *Fatigue Design of Modular Bridge Joint Systems*. NCHRP Report 402. Transportation Research Board, National Research Council, Washington, DC.

Dexter, R. J., M. J. Mutziger, and C. B. Osberg. 2002. *Performance Testing for Modular Bridge Joint Systems*. NCHRP Report 467. Transportation Research Board, National Research Council, Washington, DC.

Gent, A. N. 1964. "Elastic Stability of Rubber Compression Springs." *Journal of Mechanical Engineering Science*, Abstract, Vol. 86, No. 3, p. 86.

Gilstad, D. E. 1990. "Bridge Bearings and Stability." *Journal of Structural Engineering*, American Society of Civil Engineers, New York, NY, Vol. 116, No. 5, May 1990.

HITEC. 2002. *Guidelines for Testing Large Seismic Isolator and Energy Dissipation Devices*. HITEC/CERF Report 40600. American Society of Civil Engineers, Washington, DC.

Jacobsen, F. K., and R. K. Taylor. 1971. *TFE Expansion Bearings for Highway Bridges*. Report No. RDR-31. Illinois Department of Transportation, June 1971.

Lehman, D. E., C. W. Roeder, R. Larson, and K. Curtin. 2003. *Cotton Duck Bearing Pads: Engineering Evaluation and Design Recommendations*. Research Report No. WA-RD 569.1. Washington State Department of Transportation, Olympia, WA.

McEwen, E. E., and G. D. Spencer. 1981. "Finite Element Analysis and Experimental Results Concerning Distribution of Stress Under Pot Bearings." In *Proc., 1st World Congress on Bearings and Sealants*. Publication SP-70. American Concrete Institute, Farmington Hills, MI,

Mander, J. B, J. H. Kim, and S. S. Chen. 1993. "Experimental Performance and Modeling Study of a 30-Year-Old Bridge with Steel Bearings." *Transportation Research Record 1393*. Transportation Research Board, National Research Council, Washington, DC.

Nordlin, E. F., J. F. Boss, and R. R. Trimble. 1970. "Tetrafluorethylene. TFE as a Bridge Bearing Material." *Research Report No. M and R 64642-2.* California Department of Transportation, June 1970.

Nowak, A. S., and J. A. Laman. 1995. "Monitoring Bridge Load Spectra." *IABSE Symposium, Extending the Lifespan of Structures*, San Francisco, CA.

Pattis, A. 1993. "Dynamische Bemessung von Wasserdichten Fahrbahnubergangen-Modulsysteme (Dynamic Design of Waterproof Modular Expansion Joints)." Ph.D. Dissertation. Civil Engineering and Architecture, University of Innsbruck, Austria, December 1993.

Roark. R. J., and W. C. Young. 1976. *Formulas for Stress and Strain*, 5th Edition. McGraw Hill, New York, NY.

Roeder, C. W. 2000. *LRFD Design Criteria for Cotton Duck Pad Bridge Bearing*. NCHRP Web Doc 24. Available online: http://www4.national-academies.org/trb/crp.nsf

Roeder, C. W. 2002. *Thermal Design Procedure for Steel and Concrete Bridges*. Final Report for NCHRP 20-07/106. Transportation Research Board, National Research Council, Washington, D.C.

Roeder, C. W., and J. F. Stanton. 1983. "Elastomeric Bearings: A State of the Art." *Journal of the Structural Division*, American Society of Civil Engineers, New York, NY, Vol. 109, No. 12, December 1983, pp. 2853–2871.

Roeder, C. W., and J. F. Stanton. 1986. "Failure Modes of Elastomeric Bearings and Influence of Manufacturing Methods." In Vol. 1, *Proc. of 2nd World Congress on Bearings and Sealants*. Publication SP-94-17. 84-AB. American Concrete Institute, Farmington Hills, MI.

Roeder, C. W., and J. F. Stanton. 1991. "State of the Art Elastomeric Bridge Bearing Design." *ACI Structural Journal*, Vol. 88, No. 1, American Concrete Institute, Farmington Hills, MI, pp. 31–41.

Roeder, C. W., J. F. Stanton, and T. Feller. 1990. "Low Temperature Performance of Elastomers." *Journal of Cold Regions*, American Society of Civil Engineers, New York, NY, Vol. 4, No. 3, September 1990, pp. 113–132.

Roeder, C. W., J. F. Stanton, and A. W. Taylor. 1987. *Performance of Elastomeric Bearings*. NCHRP Report 298. Transportation Research Board, National Research Council, Washington, DC, October 1987.

Roeder, C. W., J. F. Stanton, and A. W. Taylor. 1990. "Fatigue of Steel-Reinforced Elastomeric Bearings." *Journal of Structural Division*. American Society of Civil Engineers, New York, NY, Vol. 116, No. 2, February 1990.

Saxena, A., and E. E. McEwen. 1986. "Behavior of Masonry Bearing Plates in Highway Bridges." In *Proc. of 2nd World Congress on Bearings and Sealants*. ACI Publication SP-94-31. 84-AB. American Concrete Institute, Farmington Hills, MI.

Schilling, C. G. 1990. *Variable Amplitude Load Fatigue, Task A—Literature Review: Volume I—Traffic Loading and Bridge Response*. FHWA/RD/87-059. Federal Highway Administration, U.S. Department of Transportation, Washington, DC, July 1990.

Stanton, J. F., and C. W. Roeder. 1982. *Elastomeric Bearings Design, Construction, and Materials*. NCHRP Report 248. Transportation Research Board, National Research Council, Washington, DC, August 1982.

Stanton, J. F., C. W. Roeder, and T. I. Campbell. 1999. *High-Load Multi-Rotational Bridge Bearings*. NCHRP Report 432. Transportation Research Board, National Research Council, Washington DC.

Stanton, J. F., G. Scroggins, A. W. Taylor, and C. W. Roeder. 1990. "Stability of Laminated Elastomeric Bearings." *Journal of Engineering Mechanics*, American Society of Civil Engineers, New York, NY, Vol. 116, No. 6, June 1990, pp. 1351–1371.

Subcommittee for High Load Multi-Rotational Bearings, FHWA Region 3 Structural Committee for Economical Fabrication. 1991. *Structural Bearing Specification*. Federal Highway Administration, U.S. Department of Transportation, Washington, DC, October 1991.

Tschemmernegg, F. 1991. "The Design of Modular Expansion Joints." Proceedings of the 3rd. World Congress on Joint Sealing and Bearing Systems for Concrete Structures. Toronto, ON.

Tschemmernegg, F., and A. Pattis. 1994. "Using the Concept of Fatigue Test to Design a Modular Expansion Joint." Transportation Research Board 73rd. Annual Meeting, January 1994.

Ueda, T., S. Kitipornchai, and K. Ling. 1990. "Experimental Investigation of Anchor Bolts under Shear." Journal of Structural Engineering, American Society of Civil Engineers, New York, NY, Vol. 116, No. 4, April 1990, pp. 910–924.

U.S. Department of Defense. 1989. *Cloth, Duck, Cotton or Cotton-Polyester Blend, Synthetic Rubber, Impregnated, and Laminated, Oil Resistant*. Military Specification MIL-C-882E. Available online at: http://assist.daps.dla.mil/docimages/0001/85/82/MIL_C_88.PD6