DIST.	COUNTY	ROUTE	MILE POST TOTAL PROJECT	SHEET NO.	TOTAL SHEETS

REGISTERED ENGINEER - CIVIL

PLANS APPROVAL DATE

REGISTERED PROFESSIONAL ENGINEER No. Exp. CIVIL STATE OF CALIFORNIA

The State of California or its officers or agents shall not be responsible for the accuracy or completeness of electronic copies of this plan sheet.

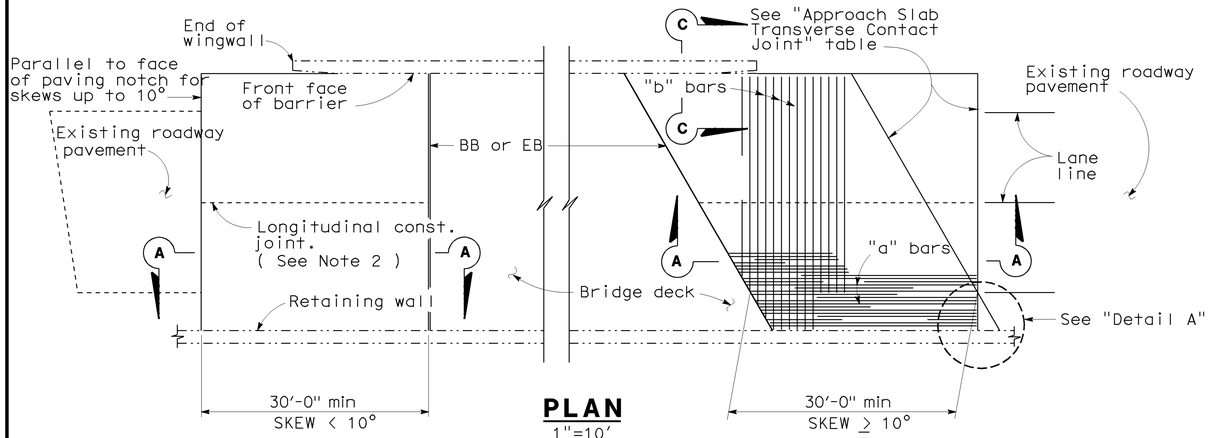

PLAN

1"=10'

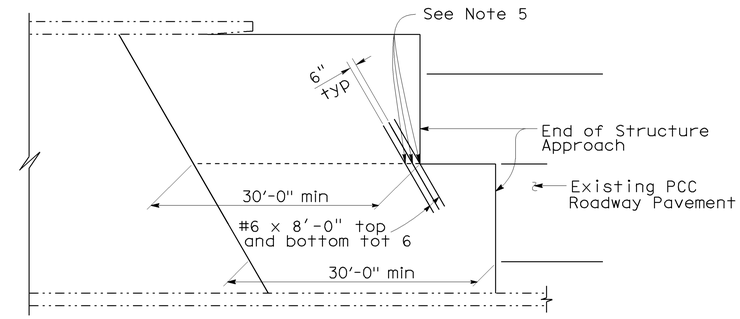

STRUCTURE APPROACH - END STAGGER DETAIL

No Scale

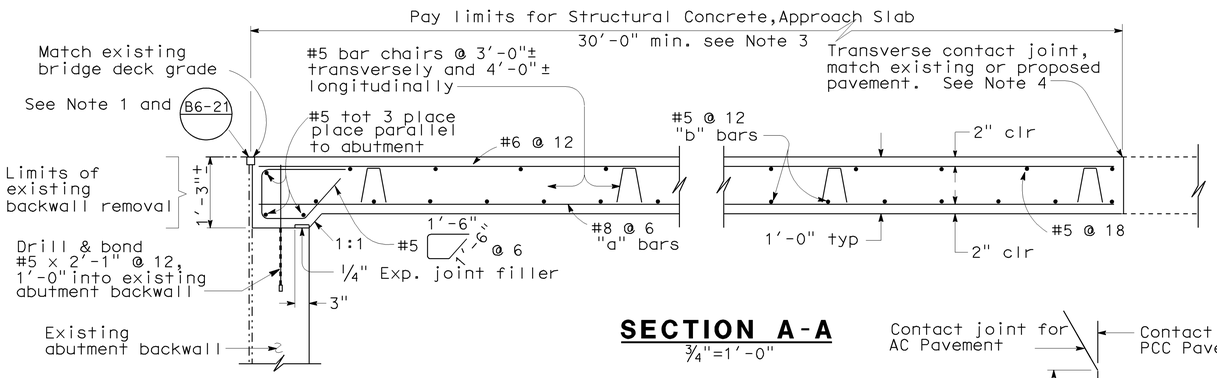

SECTION A-A

3/4"=1'-0"

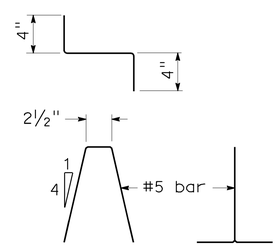

BAR CHAIR DETAIL

1 1/2"=1'-0"

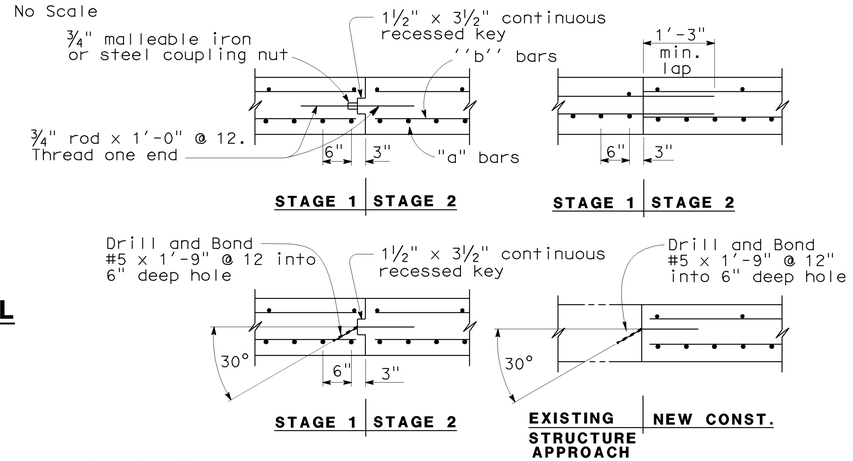

LONGITUDINAL CONSTRUCTION JOINT ALTERNATIVES

3/4"=1'-0"

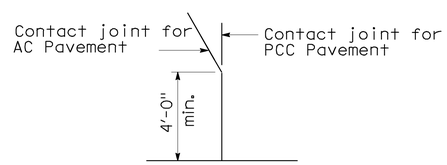

DETAIL A

No Scale

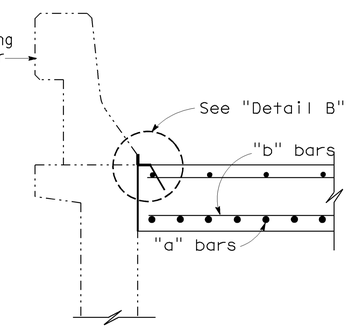

SECTION C-C

3/4"=1'-0"

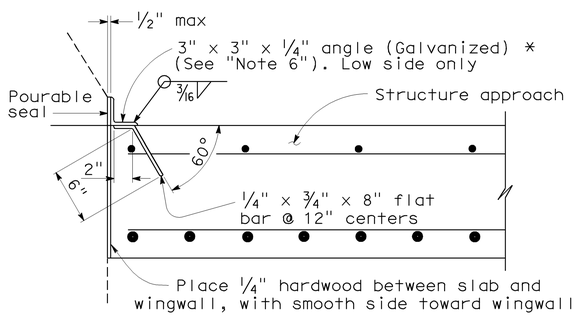

*(TO BE USED WITH TYPE 25 OR TYPE 27 CONCRETE BARRIER)

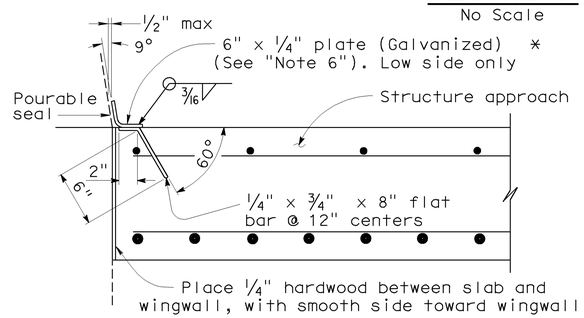

*(TO BE USED WITH TYPE 732 OR TYPE 736 CONCRETE BARRIER)

DETAIL B

1 1/2"=1'-0"

APPROACH SLAB TRANSVERSE CONTACT JOINT		
APPROACH SKEW	WITH AC ROADWAY PAVEMENT	WITH PCC ROADWAY PAVEMENT
< 10°	Parallel to face of paving notch	Parallel to face of paving notch
10°- 45°	Parallel to face of P N use (Detail A)	Stagger lines 24' to 36' apart
> 45°	Parallel to face of P N use (Detail A)	Stagger at each lane line

NOTES:

1. Sealed joint, for M.R. see Structure Plans. Adjust bar reinforcement to clear a sawcut for sealed joint, when required.
2. Longitudinal construction joints, when permitted by Engineer, shall be located on lane lines.
3. Transverse contact joint shall be a minimum of 5'-0" from an existing or constructed weakened plane joint.
4. For transverse contact joint with new PCC paving, refer to Standard Plan P10.
5. Couplers are required for stage construction.
6. End angle or plate at beginning of barrier transition, end of wingwall or end of structure approach as applicable.

NOTE:

THE CONTRACTOR SHALL VERIFY ALL CONTROLLING FIELD DIMENSIONS BEFORE ORDERING OR FABRICATING ANY MATERIAL.

DATE PLOTTED => 15-AUG-2008 TIME PLOTTED => 07:57

STANDARD DRAWING

RELEASE DATE 3/14/05	DESIGN	BY M.TRAFFALIS	CHECKED E.THORKILDSEN	RELEASED BY
	DETAILS	BY R.YEE	CHECKED E.THORKILDSEN	
FILE NO. xs3-130e	SUBMITTED	BY M.HA	DRAWING DATE 8/92	OFFICE CHIEF

STATE OF CALIFORNIA DEPARTMENT OF TRANSPORTATION

DIVISION OF ENGINEERING SERVICES

BRIDGE NO.

MILE POST

STRUCTURE APPROACH TYPE R(30S)

DS OSD 2147A (ENGLISH) (REV. X/XX/XX)

ORIGINAL SCALE IN INCHES FOR REDUCED PLANS 0 1 2 3

CU EA

DISREGARD PRINTS BEARING EARLIER REVISION DATES

REVISION DATES (PRELIMINARY STAGE ONLY) SHEET OF

USERNAME => rwu

xs3-130e.dgn