DIST.	COUNTY	ROUTE	MILE POST TOTAL PROJECT	SHEET NO.	TOTAL SHEETS

REGISTERED ENGINEER - CIVIL

PLANS APPROVAL DATE

REGISTERED PROFESSIONAL ENGINEER No. Exp. CIVIL STATE OF CALIFORNIA

The State of California or its officers or agents shall not be responsible for the accuracy or completeness of electronic copies of this plan sheet.

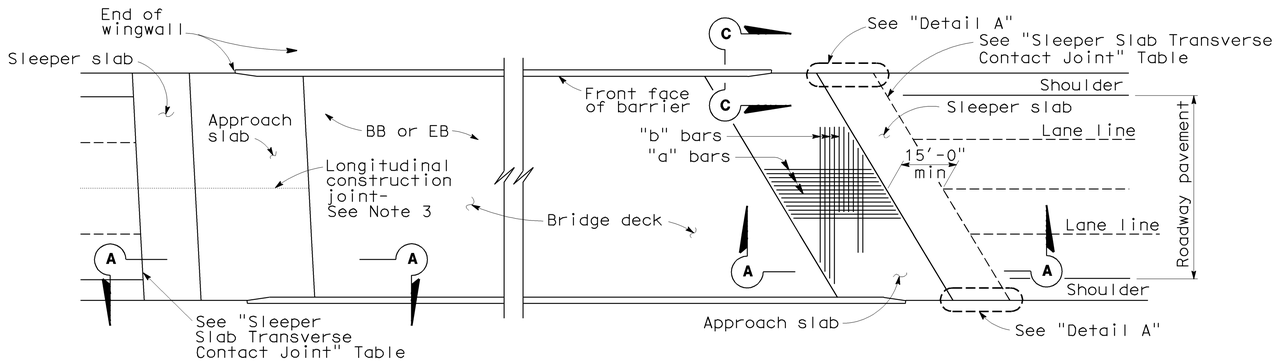

PLAN

1"=20'

NOTE: For Section C-C, see "Structure Approach Type N (45D) Details No.2" sheet.

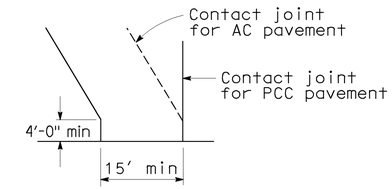

DETAIL A

No Scale

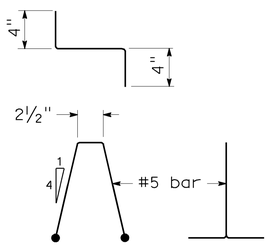

BAR CHAIR DETAIL

1½" = 1'-0"

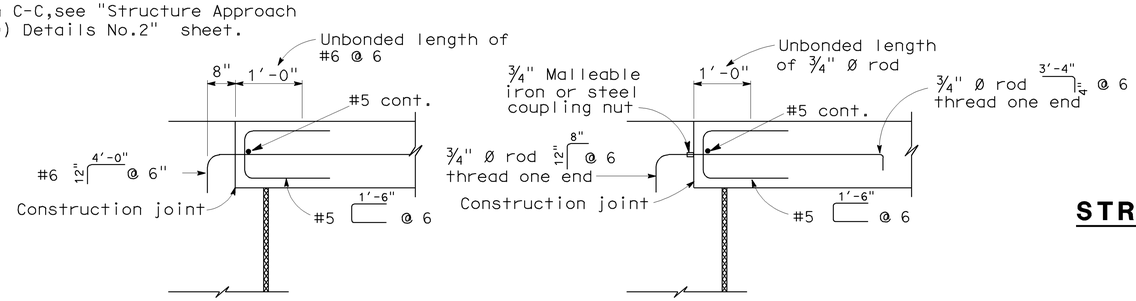

ALTERNATIVE 1

ALTERNATIVE 2

DIAPHRAGM TYPE ABUTMENT TIE DETAILS (SEE NOTE 1)

¾" = 1'-0"

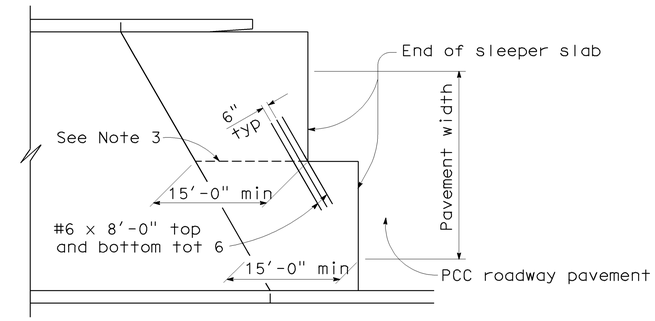

STRUCTURE APPROACH - END STAGGER DETAIL

No Scale

APPROACH SLAB TRANSVERSE CONTACT JOINT		
APPROACH SKEW	WITH AC ROADWAY PAVEMENT	WITH PCC ROADWAY PAVEMENT
< 20°	Parallel to face of paving notch	Parallel to face of paving notch
20°- 45°	Parallel to face of P N use (Detail A)	Stagger lines 24' to 36' apart
> 45°	Parallel to face of P N use (Detail A)	Stagger at each lane line

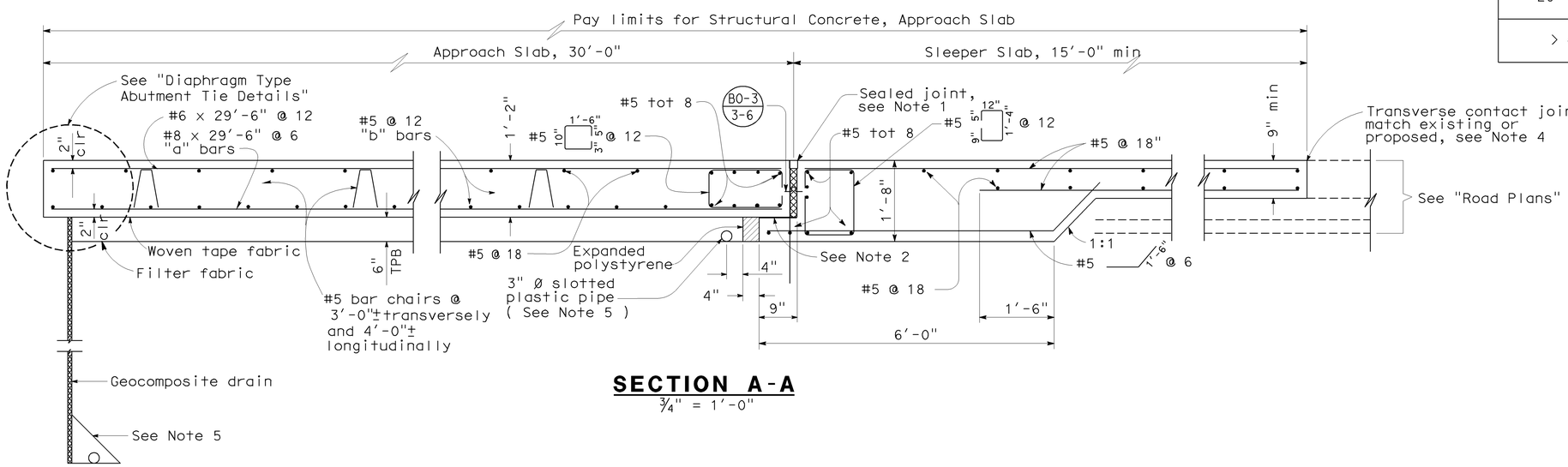

SECTION A-A

¾" = 1'-0"

NOTES:

1. For details not noted or shown, see Structure Plans.
2. Sliding joint ¼" x 0'-9" neoprene strip, coat top with silicone grease and cover with 0'-9" x 0.064" galvanized sheet metal.
3. Longitudinal construction joints, when permitted by the Engineer, shall be located on lane lines.
4. For transverse contact joint with new PCC paving, refer to Standard Plan P10.
5. For drainage details, see "Structure Approach Drainage Details" sheet.
6. At the contractor's option, slab transverse reinforcement may be placed parallel to paving notch. Spacing of transverse reinforcement is measured along ℄ roadway.

STANDARD DRAWING				
RELEASE DATE 3/14/05	DESIGN	BY M.T.RAFFALIS	CHECKED E.T.HORKILDSEN	RELEASED BY
FILE NO. xs3-010-1e	DETAILS	BY R.YEE	CHECKED E.T.HORKILDSEN	OFFICE CHIEF
	SUBMITTED	BY M.HA	DRAWING DATE 4/98	

STATE OF CALIFORNIA DEPARTMENT OF TRANSPORTATION

DIVISION OF ENGINEERING SERVICES

BRIDGE NO.

MILE POST

STRUCTURE APPROACH TYPE N (45D) DETAILS NO. 1

DS OSD 2147A (ENGLISH) (REV. X/XX/XX)

ORIGINAL SCALE IN INCHES FOR REDUCED PLANS 0 1 2 3

CU EA

DISREGARD PRINTS BEARING EARLIER REVISION DATES

REVISION DATES (PRELIMINARY STAGE ONLY) SHEET OF

USERNAME => rwu

xs3-010-1e.dgn

DATE PLOTTED => 15-AUG-2008 TIME PLOTTED => 07:54