DIST.	COUNTY	ROUTE	POST MILES TOTAL PROJECT	SHEET NO.	TOTAL SHEETS

REGISTERED ENGINEER - CIVIL

PLANS APPROVAL DATE

REGISTERED PROFESSIONAL ENGINEER No. Exp. CIVIL STATE OF CALIFORNIA

The State of California or its officers or agents shall not be responsible for the accuracy or completeness of electronic copies of this plan sheet.

Caltrans now has a web site! To get to the web site, go to: http://www.dot.ca.gov

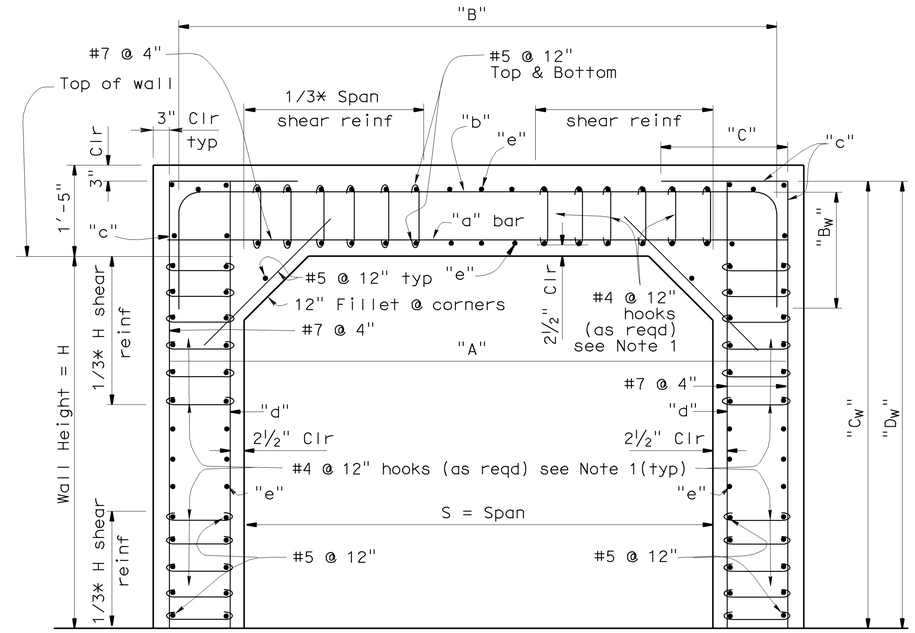

TYPICAL REINFORCEMENT FRAME TYPE 2

No Scale

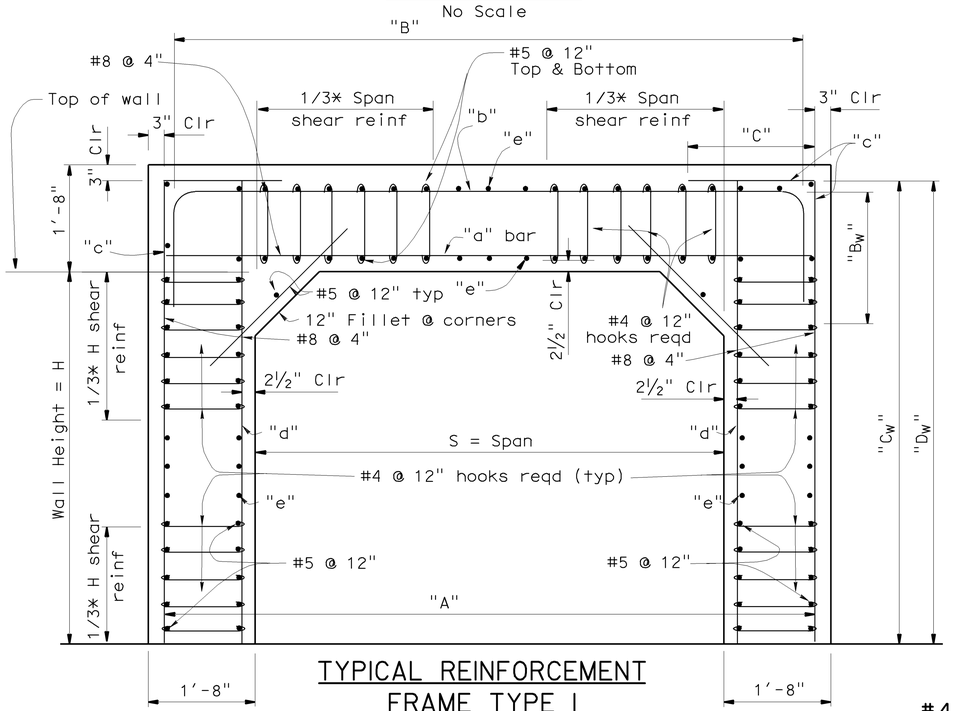

TYPICAL REINFORCEMENT FRAME TYPE 1

No Scale

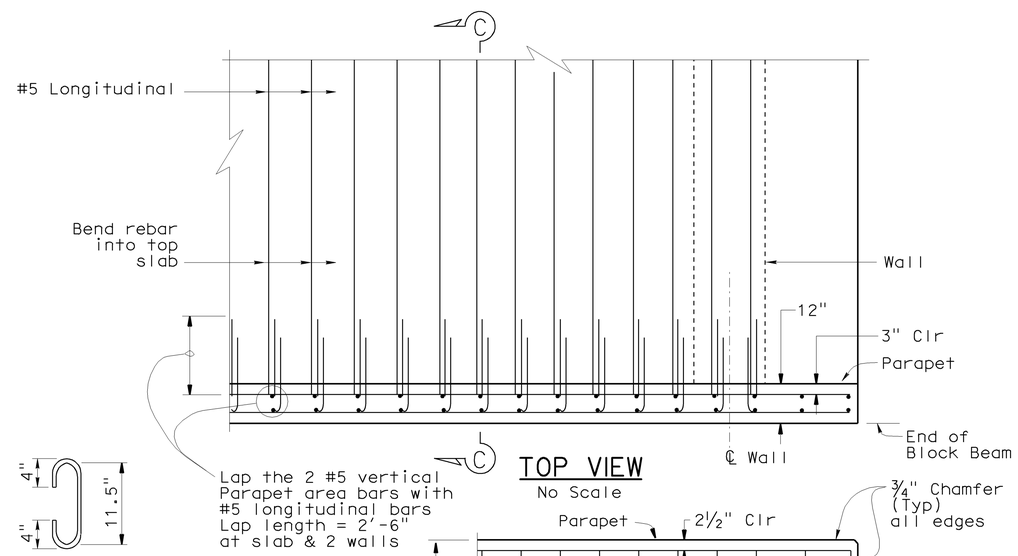

TOP VIEW

No Scale

#4 HOOK TYPE 2

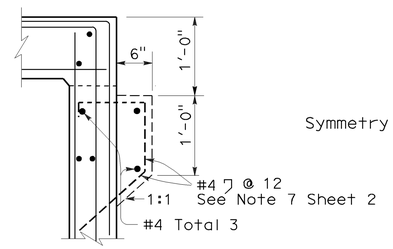

EXPOSED TOP (ALT.)

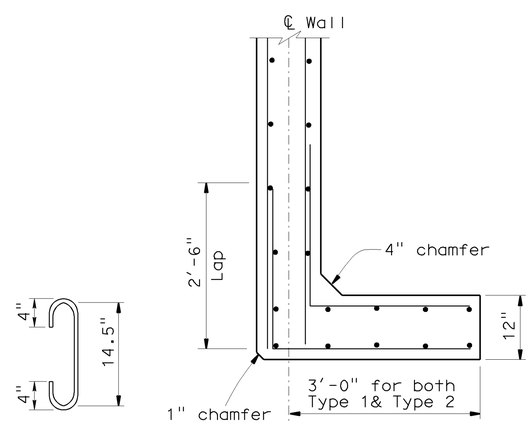

SECTION D-D

No Scale

#4 HOOK TYPE 1

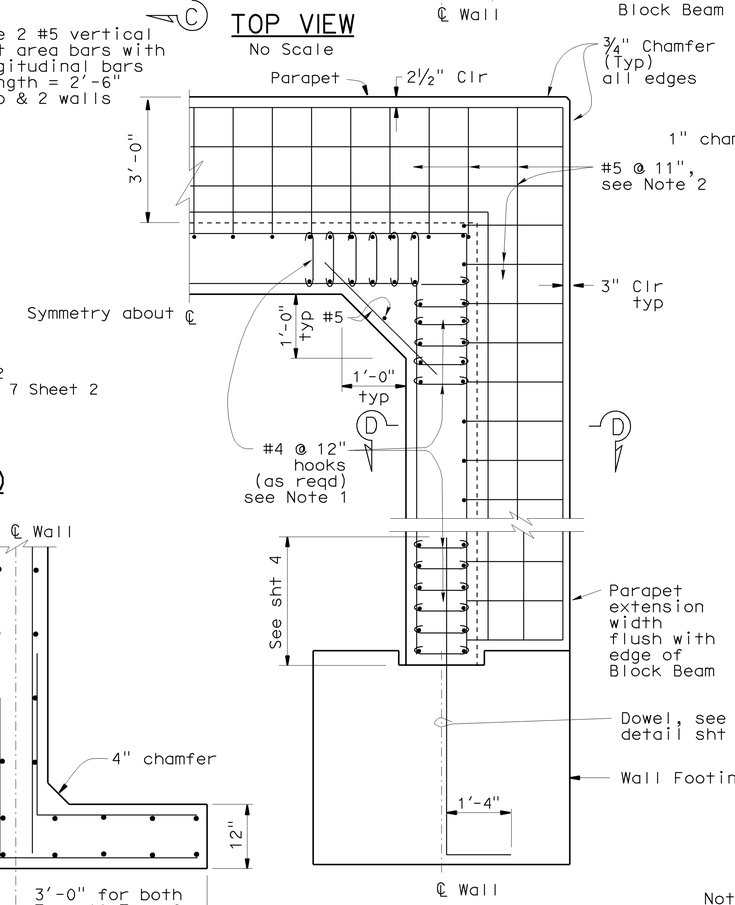

ELEVATION VIEW

CONCRETE PARAPET DETAILS

No Scale

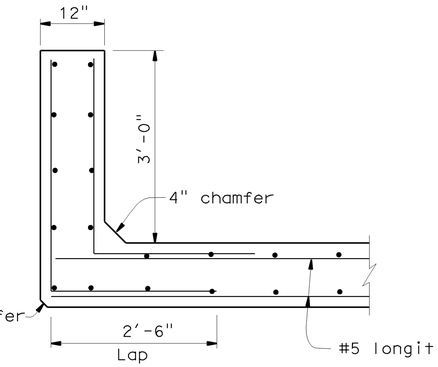

SECTION C-C

No Scale

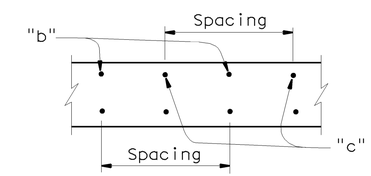

SIDE VIEW

ROOF SECTION

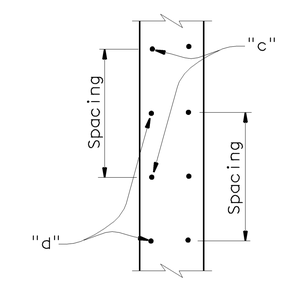

TOP VIEW

WALL SECTION

Notes:

1. Refer to Table on Sheet 1 for required locations.
2. Skewed parapets require additional reinforcement, see Sheet 4

STANDARD DRAWING			
FILE NO. xs17-050-3e	APPROVED BY D FORESTER (RESPONSIBLE TECHNICAL SPECIALIST)	RELEASED BY ROBERTO LACALLE (RESPONSIBLE OFFICE CHIEF)	
	APPROVAL DATE 6-27-08	RELEASE DATE 6-27-08	

STATE OF CALIFORNIA DEPARTMENT OF TRANSPORTATION

DIVISION OF ENGINEERING SERVICES

BRIDGE NO.

POST MILE

CULVERT - CAST IN PLACE BOTTOMLESS

WALL & SLAB DETAIL TYPE 1 & 2

DS OSD 2147A (ENGLISH STANDARD DRAWING "XS" BORDER REV. 01/11/08)

ORIGINAL SCALE IN INCHES FOR REDUCED PLANS 0 1 2 3

CU
EA

DISREGARD PRINTS BEARING EARLIER REVISION DATES

REVISION DATES (PRELIMINARY STAGE ONLY)

SHEET 3 OF 4

USERNAME => rwu

xs17-050-3e.dgn

DATE PLOTTED => 17-OCT-2008 TIME PLOTTED => 08:31