DIST.	COUNTY	ROUTE	POST MILES TOTAL PROJECT	SHEET NO.	TOTAL SHEETS

REGISTERED ENGINEER - CIVIL

PLANS APPROVAL DATE

REGISTERED PROFESSIONAL ENGINEER No. Exp. CIVIL STATE OF CALIFORNIA

The State of California or its officers or agents shall not be responsible for the accuracy or completeness of electronic copies of this plan sheet.

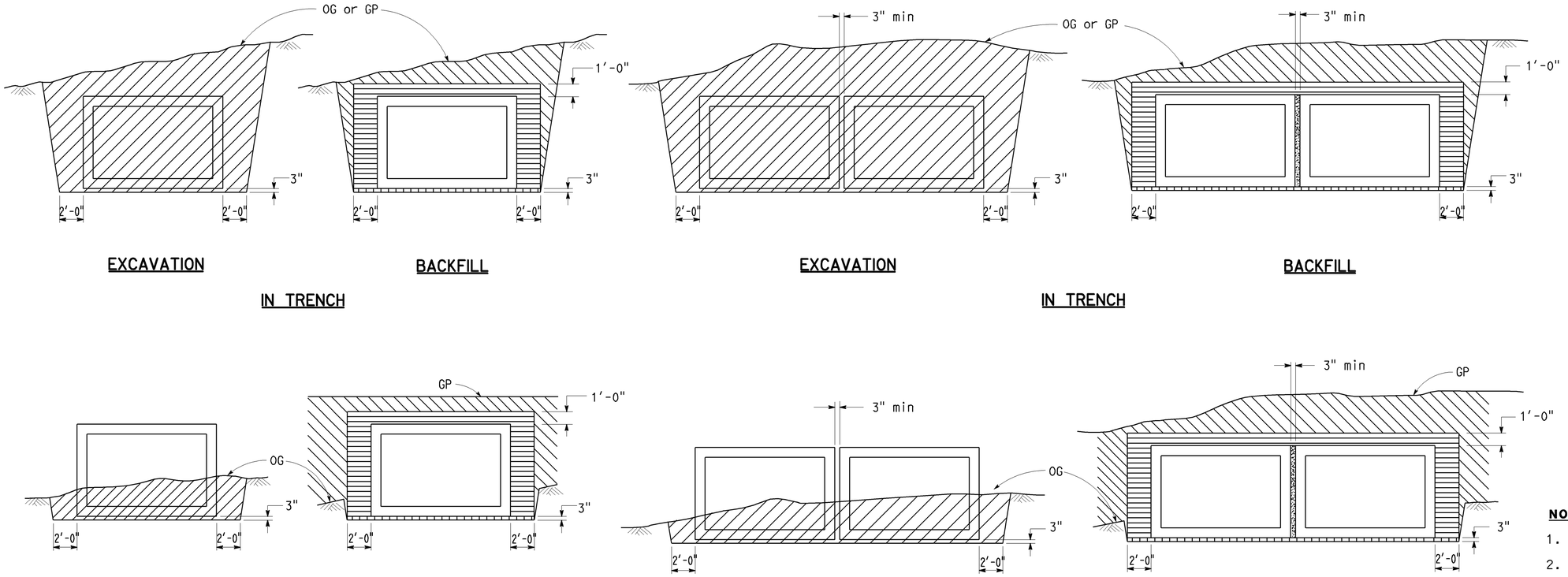

FILL HEIGHT GREATER THAN 2'-0"

- Structure excavation (Culvert)
- Structure backfill (Culvert) 95% relative compaction
- Roadway embankment
- Slurry cement backfill
- Sand bedding (Culvert)
- Roadway structural section
- Original ground

NOTES:

1. Slope or shore excavation sides as necessary.
2. Dimensions shown are minimum.
3. Method 2 and 3 for single or multiple boxes requires an approved external sealing band. See "Precast RCB Culvert, Reinforcement and Design Tables" sheet.
4. Construction of Roadway Structural Section in Method 2 or Method 3 shall not disturb the external sealing band installation.

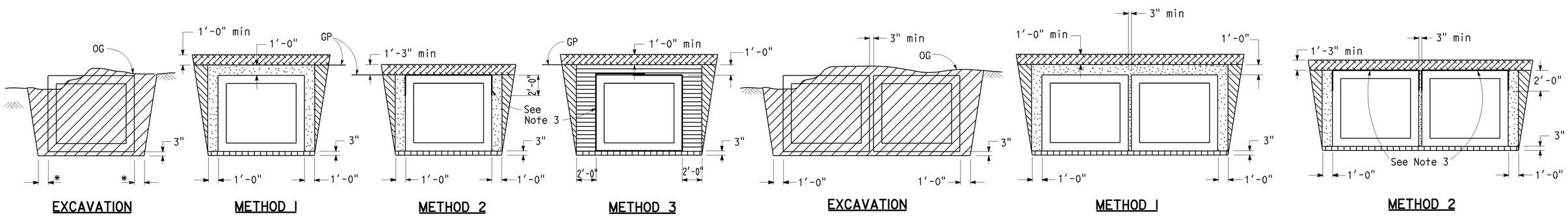

FILL HEIGHT 2'-0" OR LESS

* 1'-0" Where Method 1 or 2 Backfill is used.
2'-0" Where Method 3 Backfill is used.

NO SCALE

STANDARD DRAWING					
RELEASE DATE 11/14/05	DESIGN	BY WOODY	CHECKED CHATELAIN	RELEASED BY	
	DETAILS	BY R. YEE	CHECKED CHATELAIN		
FILE NO. xs17-040e	SUBMITTED	BY D. FORESTER	DRAWING DATE 4/92	OFFICE CHIEF	

STATE OF CALIFORNIA DEPARTMENT OF TRANSPORTATION

DIVISION OF ENGINEERING SERVICES

BRIDGE NO.

POST MILE

CULVERT - PRECAST RCB

EXCAVATION AND BACKFILL DETAILS

DS OSD 2147A (REV. X/XX/XX)

ORIGINAL SCALE IN INCHES FOR REDUCED PLANS 0 1 2 3

CU
EA

DISREGARD PRINTS BEARING EARLIER REVISION DATES

REVISION DATES (PRELIMINARY STAGE ONLY) SHEET OF

USERNAME => rwu

xs17-040e.dgn

DATE PLOTTED => 08-DEC-2005 TIME PLOTTED => 09:32