DIST.	COUNTY	ROUTE	KILOMETER POST TOTAL PROJECT	SHEET NO.	TOTAL SHEETS

Caltrans Metric

REGISTERED ENGINEER - CIVIL

PLANS APPROVAL DATE

REGISTERED PROFESSIONAL ENGINEER No. Exp. CIVIL STATE OF CALIFORNIA

The State of California or its officers or agents shall not be responsible for the accuracy or completeness of electronic copies of this plan sheet.

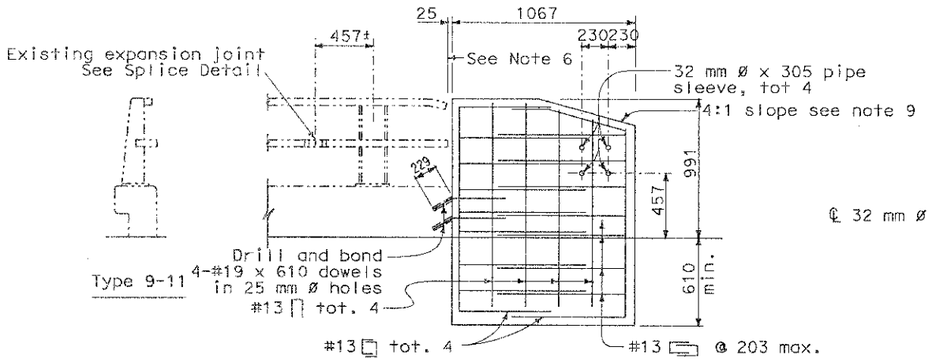

ELEVATION
EXISTING BARRIER RAILING TYPE 9-II
ALTERNATIVE 1

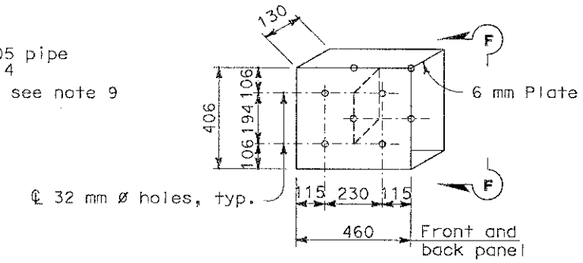

DETAIL E

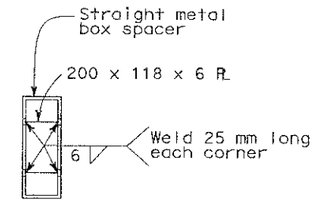

VIEW F-F

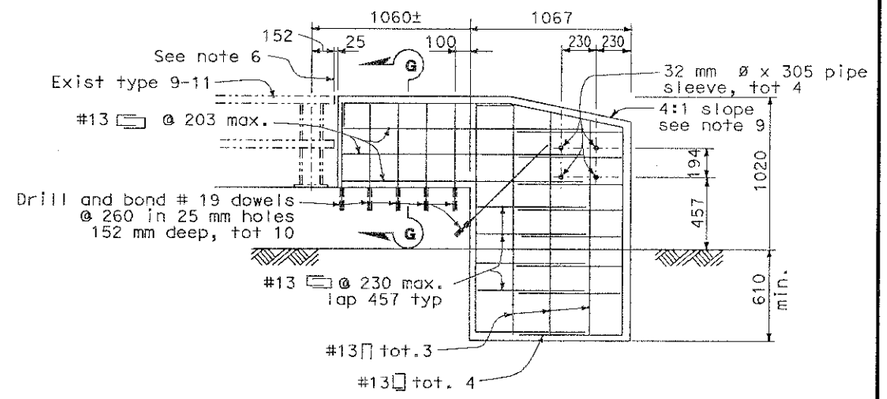

ELEVATION
EXISTING BARRIER RAILING TYPE 9-II
ALTERNATIVE 3

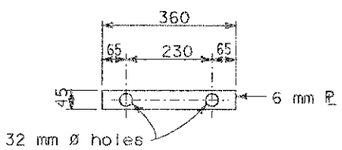

DETAIL H

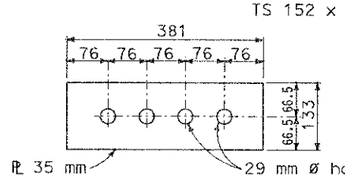

SPLICE PLATE

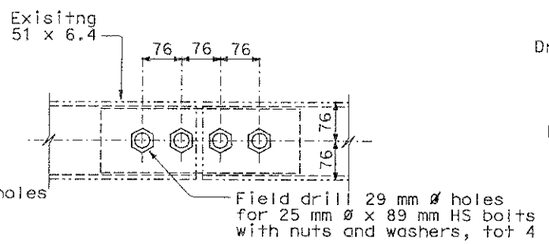

MODIFIED TUBE

RAIL SPLICE DETAIL

SEE NOTE 7

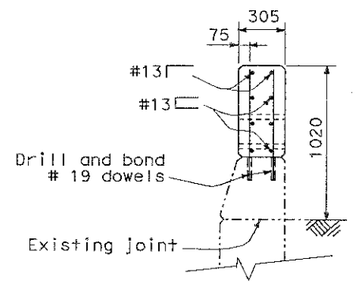

SECTION G-G

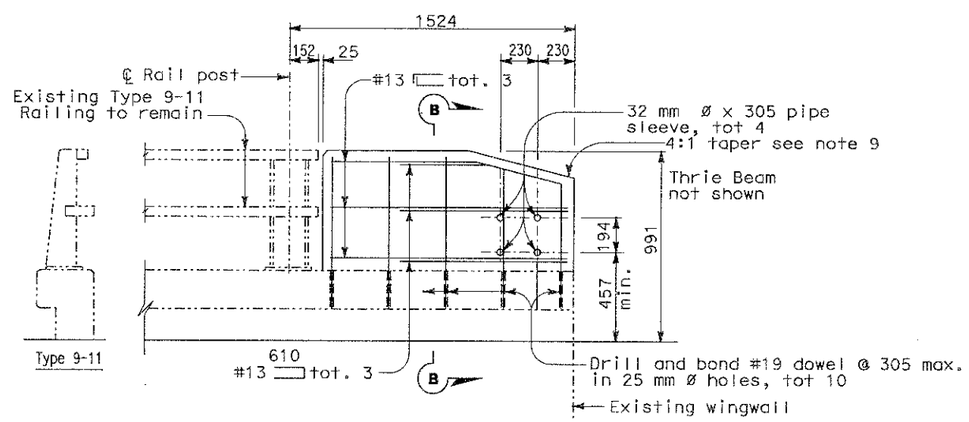

EXISTING BARRIER RAILING TYPE 9-II
ALTERNATIVE 2

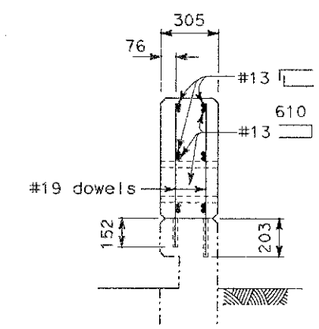

SECTION B-B

1. All plates and bolts are galvanized.

NO SCALE
ALL DIMENSIONS ARE IN MILLMETERS UNLESS OTHERWISE SHOWN

SHEET 2 OF 2

RELEASE DATE 9/25/06	DESIGN BY TILLAT SATTER	CHECKED NEELIMA PATIL	RELEASED BY	STATE OF CALIFORNIA DEPARTMENT OF TRANSPORTATION
FILE NO. XS16-430-2	DETAILS BY H. NGUYEN	CHECKED TILLAT SATTER	OFFICE CHIEF	DIVISION OF ENGINEERING SERVICES
	SUBMITTED BY	DRAWING DATE 08/06		

BRIDGE NO.

KILOMETER POST

THRIE BEAM CONNECTION DETAILS

BARRIER RAILING TYPE 9 AND 9-11

DS OSD 2159M (METRIC) (REV. 3/5/97)

ORIGINAL SCALE IN MILLIMETERS FOR REDUCED PLANS 0 10 20 30 40 50 60 70 80 90 100

CU 0
EA 0

DISREGARD PRINTS BEARING EARLIER REVISION DATES

REVISION DATES (PRELIMINARY STAGE ONLY)

SHEET 2 OF 2

USERNAME => tdudsak

FILE => xs-430-2.dgn

USERNAME => tdudsak DATE PLOTTED => 26-SEP-2006 TIME PLOTTED => 12:59