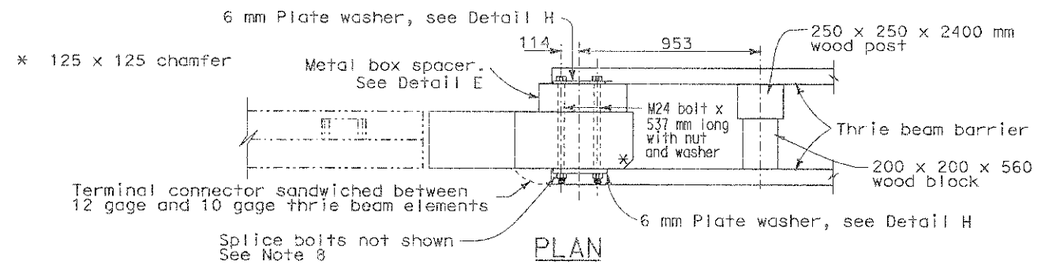

PLAN

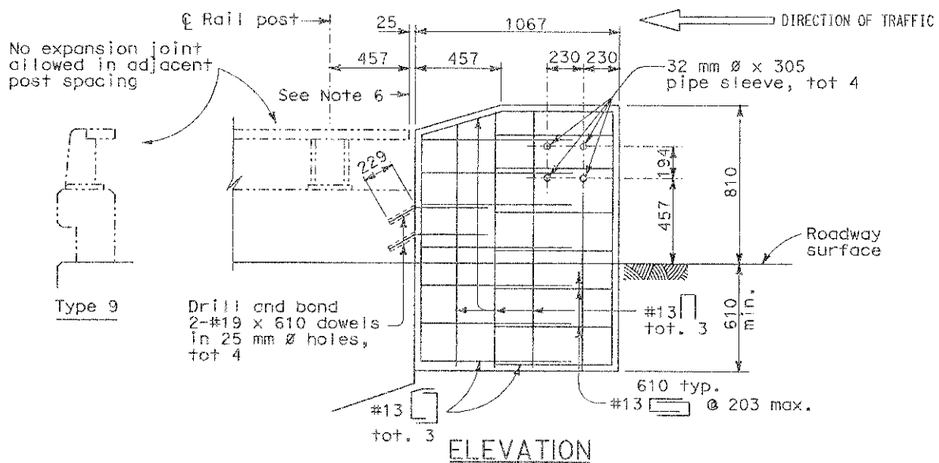

ELEVATION
EXISTING BARRIER RAILING TYPE 9
ALTERNATIVE 1

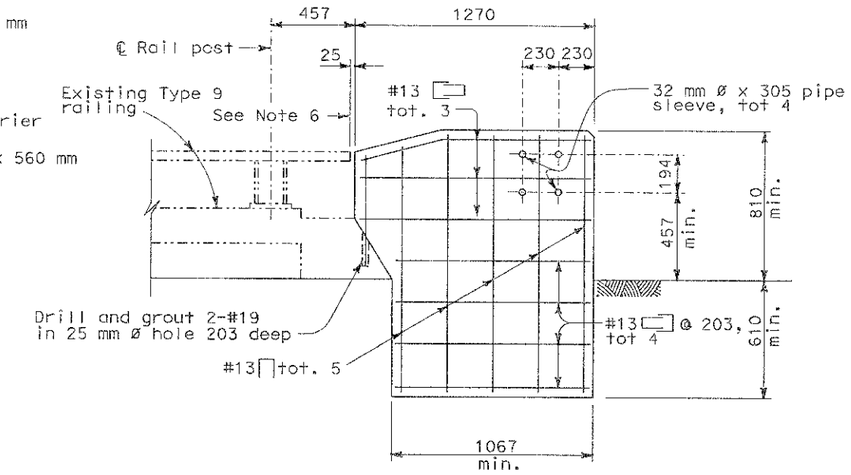

ELEVATION
EXISTING BARRIER RAILING TYPE 9
ALTERNATIVE 3

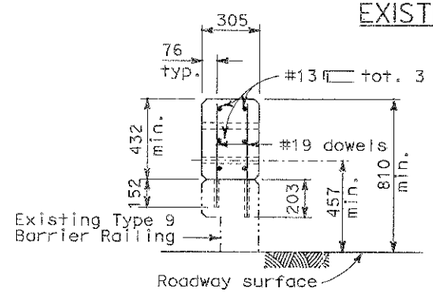

SECTION C-C

NOTES:

1. For details not shown, see Standard Plans.
2. Dependent dimensions will be verified in the field before fabricating any end connection to conform with existing paved conditions.
3. When end section is called for, modify typical terminal section to fit. See detail E sheet 2.
4. For Thrie Beam connection, see Standard Plans "Thrie beam barrier connections to Bridge Railing".
5. All plates and bolts are galvanized.
6. Cut and remove that portion of Type 9, 9-11 and BAGR as required.
7. If rail is not continuous over 2 posts, use splice at expansion joint.
8. Exterior splice bolt holes shall be the standard 23 mm x 29 mm slot size for rail splices at Post # T4 and the connection to the concrete barrier or railing. Interior splice bolt holes may be increased up to 29 mm dia. Washers shall be used with splice bolts on back side of rail element at Post # T4 and connection to the concrete barrier or railing.
9. Taper the top of the end of the bridge railing at 4:1 to match the top elevation of the thrie beam rail element.

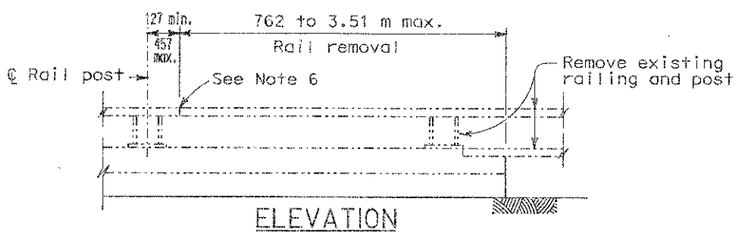

ELEVATION
Rail removal

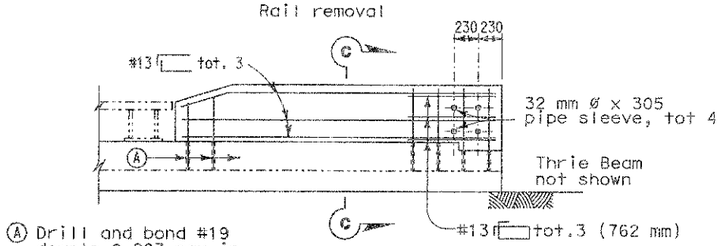

ELEVATION
New End Post

EXISTING BARRIER RAILING TYPE 9
ALTERNATIVE 2

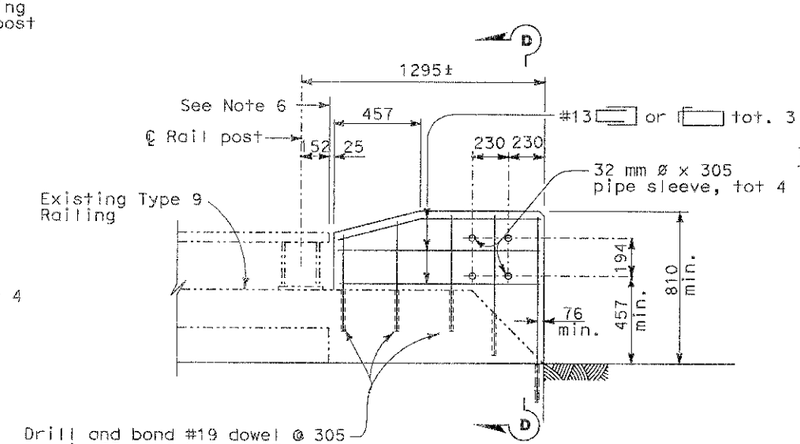

ELEVATION
EXISTING BARRIER RAILING TYPE 9
ALTERNATIVE 4

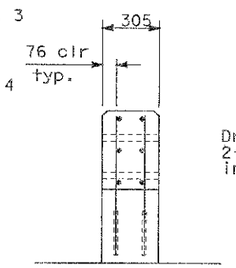

SECTION D-D

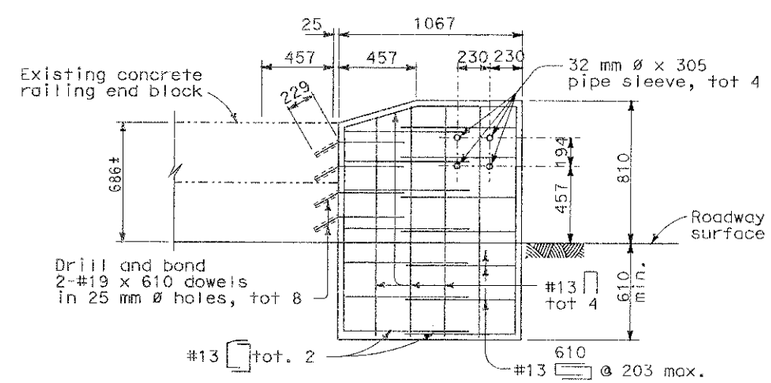

ELEVATION
EXISTING BARRIER RAILING TYPE 9
ALTERNATIVE 5

ALL DIMENSIONS ARE IN MILLIMETERS UNLESS OTHERWISE SHOWN

SHEET 1 OF 2

DIST.	COUNTY	ROUTE	KILOMETER POST TOTAL PROJECT	SHEET NO.	TOTAL SHEETS

Caltrans Metric

REGISTERED ENGINEER - CIVIL

PLANS APPROVAL DATE

The State of California or its officers or agents shall not be responsible for the accuracy or completeness of electronic copies of this plan sheet.

REGISTERED PROFESSIONAL ENGINEER No. Exp. CIVIL STATE OF CALIFORNIA

RELEASE DATE 9/25/06	DESIGN	BY TILLAT SATTER	CHECKED NEELIMA PATIL	RELEASED BY
FILE NO. XS16-430-1	DETAILS	BY H. NGUYEN	CHECKED TILLAT SATTER	OFFICE CHIEF
	SUBMITTED	BY	DRAWING DATE 08/06	

DS OSD 2139M (METRIC) (REV. 3/5/97)

STATE OF CALIFORNIA
DEPARTMENT OF TRANSPORTATION

DIVISION OF ENGINEERING SERVICES

BRIDGE NO.

KILOMETER POST

THRIE BEAM CONNECTION DETAILS

BARRIER RAILING TYPE 9 AND 9-11

ORIGINAL SCALE IN MILLIMETERS FOR REDUCED PLANS 0 10 20 30 40 50 60 70 80 90 100

CU 0
EA 0

DISREGARD PRINTS BEARING EARLIER REVISION DATES

REVISION DATES (PRELIMINARY STAGE ONLY)

SHEET 1 OF 2

USERNAME => tdudsak

FILE => xs-430-1.dgn

USERNAME => tdudsak DATE PLOTTED => 26-SEP-2006 TIME PLOTTED => 13:07