DIST.	COUNTY	ROUTE	KILOMETER POST TOTAL PROJECT	SHEET NO.	TOTAL SHEETS

Caltrans Metric

REGISTERED ENGINEER - CIVIL

PLANS APPROVAL DATE

REGISTERED PROFESSIONAL ENGINEER No. Exp. CIVIL STATE OF CALIFORNIA

The State of California or its officers or agents shall not be responsible for the accuracy or completeness of electronic copies of this plan sheet.

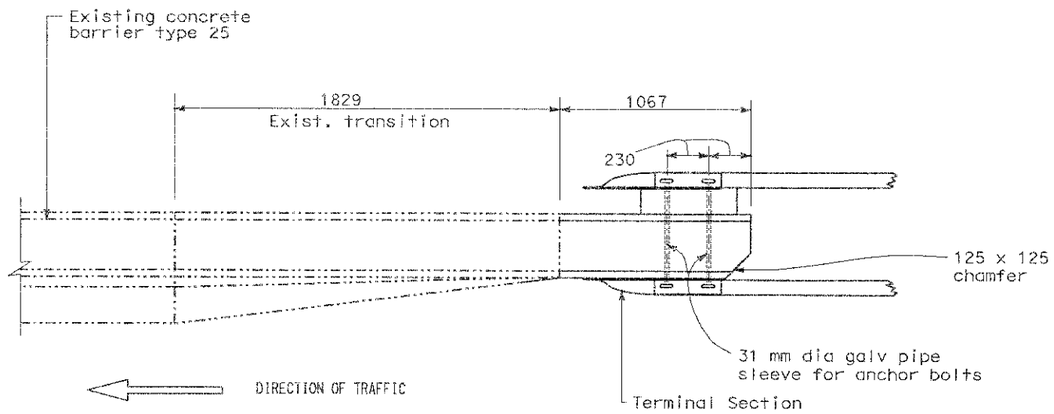

PLAN
No Scale

A78F1 A78F2

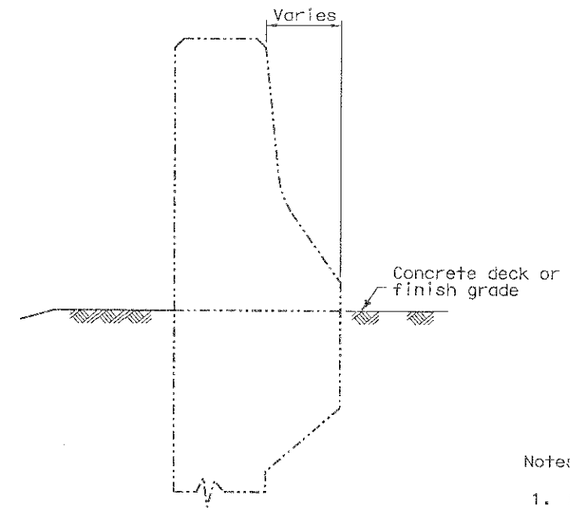

SECTION B-B
No Scale

Notes:

1. For details not shown, see Standard Plans.
2. Dependent dimensions will be verified in the field before fabricating any end connection to conform with existing paved conditions.
3. All plates and bolts are galvanized.

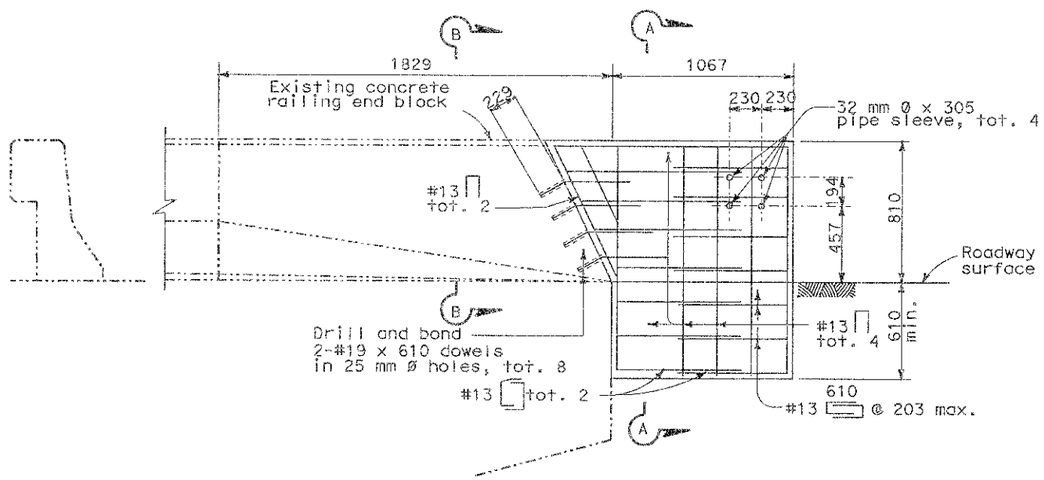

ELEVATION
No Scale

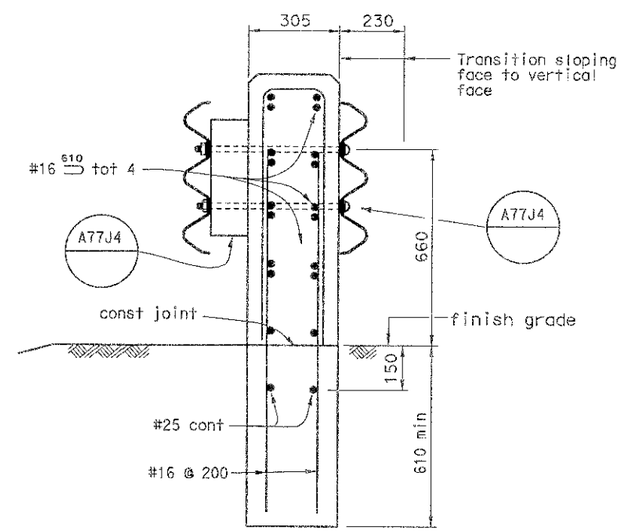

SECTION A-A
No Scale

Legend:

-------- Indicates existing structure.

———— Indicates new construction.

STANDARD PLAN SHEET NO.

DETAIL NO.

ALL DIMENSIONS ARE IN MILLIMETERS UNLESS OTHERWISE SHOWN

STANDARD DRAWING				
RELEASE DATE 8/25/06	DESIGN	BY TILLAT SATTER	CHECKED NEELIMA PATIL	RELEASED BY
FILE NO. XS16-420	DETAILS	BY H.NGUYEN	CHECKED TILLAT SATTER	OFFICE CHIEF
	SUBMITTED	BY	DRAWING DATE 7/02	

STATE OF CALIFORNIA DEPARTMENT OF TRANSPORTATION

DIVISION OF ENGINEERING SERVICES

BRIDGE NO.

KILOMETER POST

THRIE BEAM CONNECTION DETAILS

BARRIER RAILING TYPE 25

DS OSD 2147A (METRIC) (REV.2/25/97)

ORIGINAL SCALE IN MILLIMETERS FOR REDUCED PLANS 0 10 20 30 40 50 60 70 80 90 100

CU
EA

DISREGARD PRINTS BEARING EARLIER REVISION DATES

REVISION DATES (PRELIMINARY STAGE ONLY)

SHEET OF

USERNAME => tdudsak

FILE => xs16-420.dgn

USERNAME => tdudsak DATE PLOTTED => 26-SEP-2006 TIME PLOTTED => 13:03