DIST.	COUNTY	ROUTE	KILOMETER POST TOTAL PROJECT	SHEET NO.	TOTAL SHEETS

Caltrans Metric

REGISTERED ENGINEER - CIVIL

PLANS APPROVAL DATE

REGISTERED PROFESSIONAL ENGINEER No. Exp. CIVIL STATE OF CALIFORNIA

The State of California or its officers or agents shall not be responsible for the accuracy or completeness of electronic copies of this plan sheet.

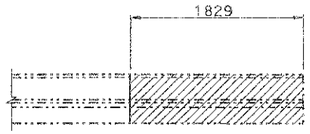

PLAN

No Scale

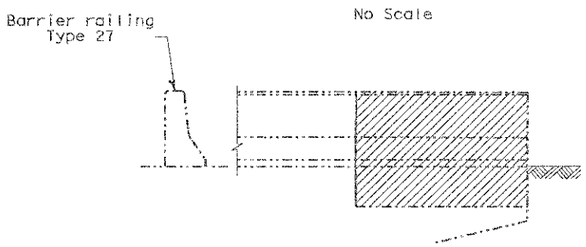

ELEVATION

No Scale

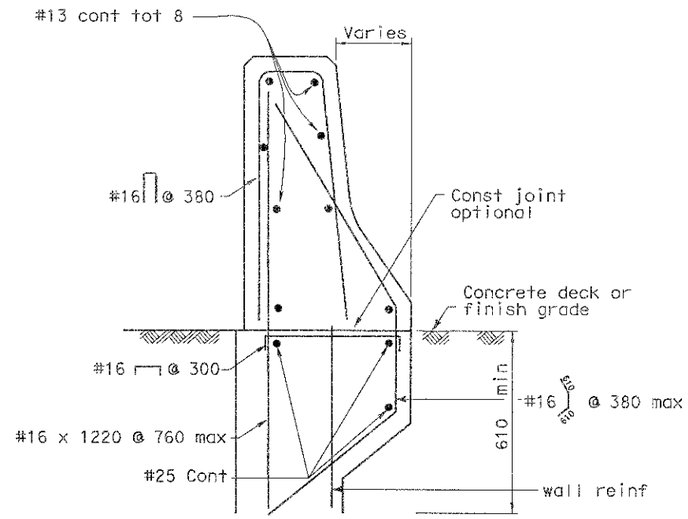

SECTION B-B

No Scale

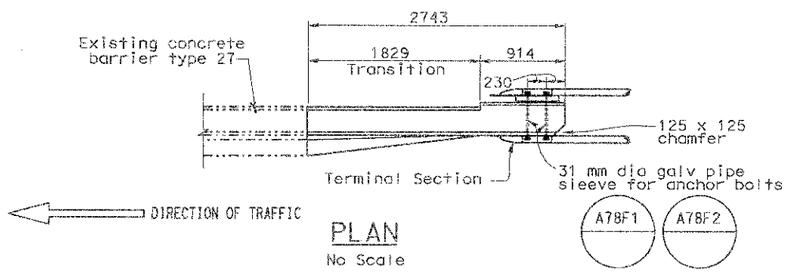

PLAN

No Scale

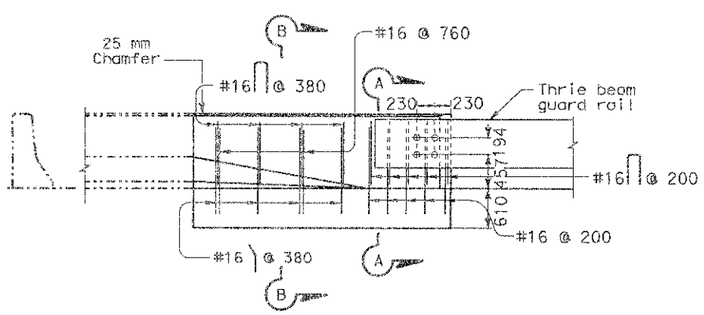

ELEVATION

No Scale

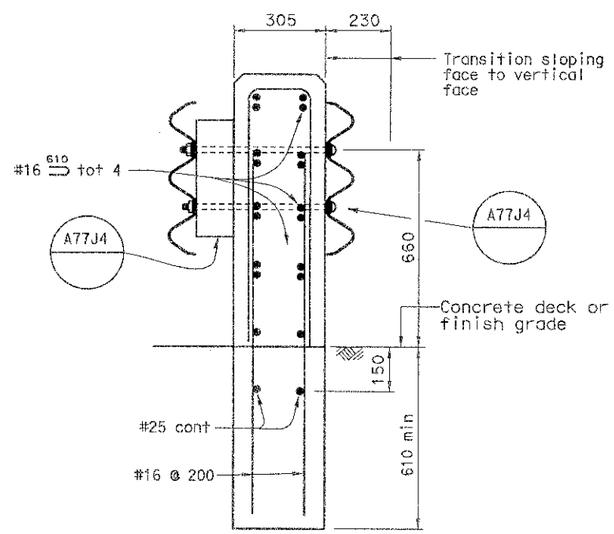

SECTION A-A

No Scale

STANDARD PLAN SHEET NO.

DETAIL NO.

Notes:

1. For details not shown, see Standard Plans.
2. Dependent dimensions will be verified in the field before fabricating any end connection to conform with existing paved conditions.
3. For Thrie Beam Connection, see Standard Plans "Thrie Beam Barrier Connections To Bridge Railing"
4. All plates and bolts are galvanized.
5. Cut and remove that portion of Type 27 as required. Existing reinf to remain.
6. Wing wall reinforcement to remain.

Legend:

Indicates existing structure.

Indicates new construction.

Concrete removal.

ALL DIMENSIONS ARE IN MILLIMETERS UNLESS OTHERWISE SHOWN

STANDARD DRAWING				
RELEASE DATE 9/25/06	DESIGN	BY TILLAT SATTER	CHECKED NEELIMA PATIL	RELEASED BY
	DETAILS	BY H. NGUYEN	CHECKED TILLAT SATTER	
FILE NO. XS16-410	SUBMITTED	BY	DRAWING DATE 7/02	OFFICE CHIEF

STATE OF CALIFORNIA DEPARTMENT OF TRANSPORTATION

DIVISION OF ENGINEERING SERVICES

BRIDGE NO.

KILOMETER POST

THRIE BEAM CONNECTION DETAILS

BARRIER RAILING TYPE 27

DS OSD 2147A (METRIC) (REV. 2/25/97)

ORIGINAL SCALE IN MILLIMETERS FOR REDUCED PLANS 0 10 20 30 40 50 60 70 80 90 100

CU
EA

DISREGARD PRINTS BEARING EARLIER REVISION DATES

REVISION DATES (PRELIMINARY STAGE ONLY) SHEET OF

USERNAME => tdudsak DATE PLOTTED => 26-SEP-2006 TIME PLOTTED => 13:02

USERNAME => tdudsak FILE => xs16-410.dgn