DIST.	COUNTY	ROUTE	KILOMETER POST TOTAL PROJECT	SHEET NO.	TOTAL SHEETS

Caltrans Metric

REGISTERED ENGINEER - CIVIL

PLANS APPROVAL DATE

REGISTERED PROFESSIONAL ENGINEER No. Exp. CIVIL STATE OF CALIFORNIA

The State of California or its officers or agents shall not be responsible for the accuracy or completeness of electronic copies of this plan sheet.

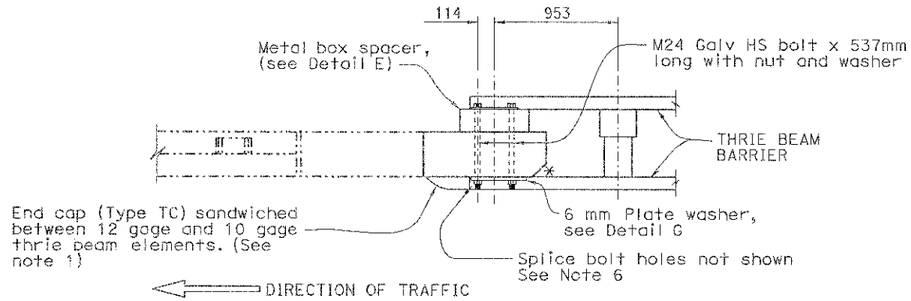

PLAN

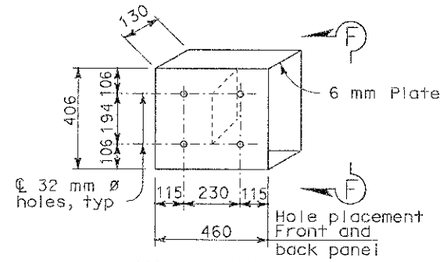

DETAIL E

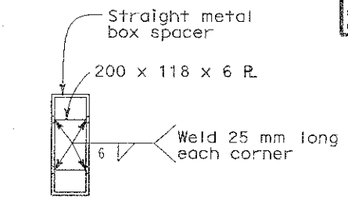

VIEW F-F

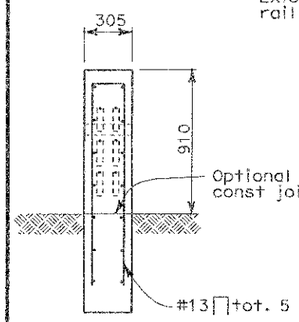

SECTION A-A

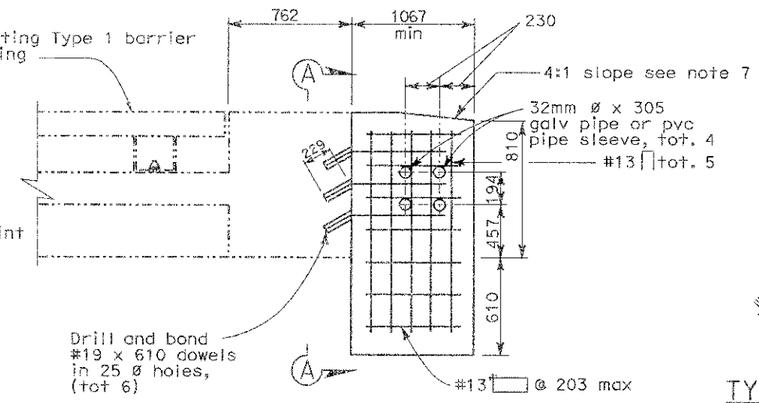

ELEVATION

TYPE 1

* 125x125 chamfer

TYPICAL SECTION

(TYPE 1 BARRIER)

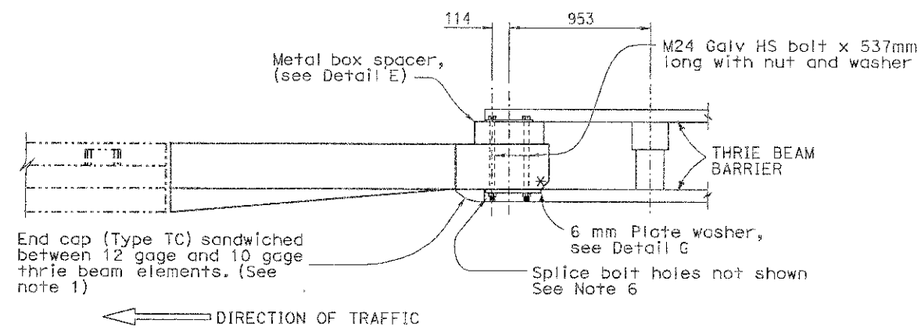

PLAN

NOTES:

1. For details not shown, see Standard Plans, July 2004.
2. Dependent dimensions will be verified in the field before fabricating any end connection to conform with existing paved conditions.
3. When end section is called for, modify typical terminal section to fit. See Detail E
4. All plates and bolts are galvanized.
5. Cut and remove portion of Type 1, 2 and BAGR as required.
6. Exterior splice bolt holes shall be the standard 23 mm x 29 mm slot size for rail splices at post #T4 and the connection to the concrete barrier or railing. Interior splice bolt holes may be increased up to 29 mm dia. Washers shall be used with splice bolts on back side of rail element at post #T4 and connection to the concrete barrier or railing.
7. Taper the top of the end of the bridge railing at 4:1 to match the top elevation of the thrie beam rail element.

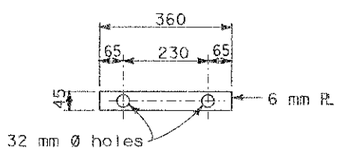

DETAIL G

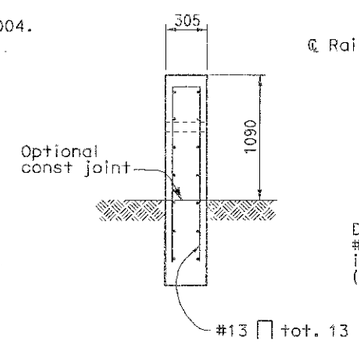

SECTION B-B

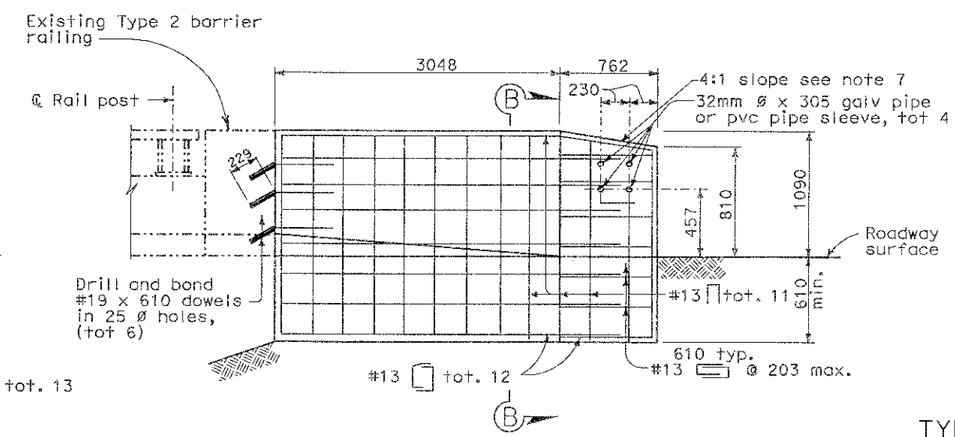

ELEVATION

TYPE 2

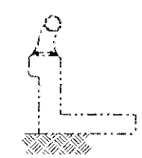

TYPICAL SECTION

(TYPE 2 BARRIER)

NO SCALE

ALL DIMENSIONS ARE IN MILLIMETERS UNLESS OTHERWISE SHOWN

STANDARD DRAWING				
RELEASE DATE 9/25/06	DESIGN BY TILLAT SATTER	CHECKED NEELIMA PATIL	RELEASED BY Roberto Trevelle OFFICE CHIEF	
FILE NO. XS16-400	DETAILS BY H.NGUYEN	CHECKED TILLAT SATTER		
	SUBMITTED BY	DRAWING DATE 08/06		

STATE OF CALIFORNIA DEPARTMENT OF TRANSPORTATION

DIVISION OF ENGINEERING SERVICES

BRIDGE NO.

KILOMETER POST

THRIE BEAM CONNECTION DETAILS

BARRIER RAILING TYPE 1 & TYPE 2

DS OSD 2147A (METRIC) (REV. 2/25/97)

ORIGINAL SCALE IN MILLIMETERS FOR REDUCED PLANS 0 10 20 30 40 50 60 70 80 90 100

CU EA

DISREGARD PRINTS BEARING EARLIER REVISION DATES

REVISION DATES (PRELIMINARY STAGE ONLY)

SHEET OF

USERNAME => tdudsak

FILE => xs16-400.dgn

DATE PLOTTED => 26-SEP-2006 SEP-2006 PLOTTED => 13:01