DIST.	COUNTY	ROUTE	POST MILES TOTAL PROJECT	SHEET NO.	TOTAL SHEETS

REGISTERED ENGINEER - CIVIL

PLANS APPROVAL DATE

REGISTERED PROFESSIONAL ENGINEER No. Exp. CIVIL STATE OF CALIFORNIA

The State of California or its officers or agents shall not be responsible for the accuracy or completeness of electronic copies of this plan sheet.

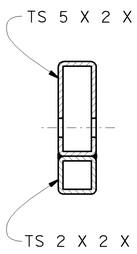

SECT H-H

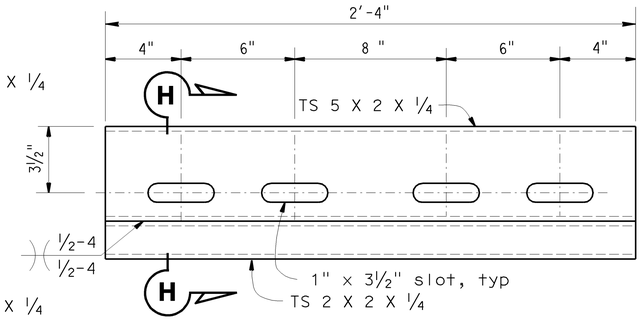

STANDARD SLEEVE DETAIL

(For TS 8 X 3 X 5/16 rail)
SCALE 3 "= 1'

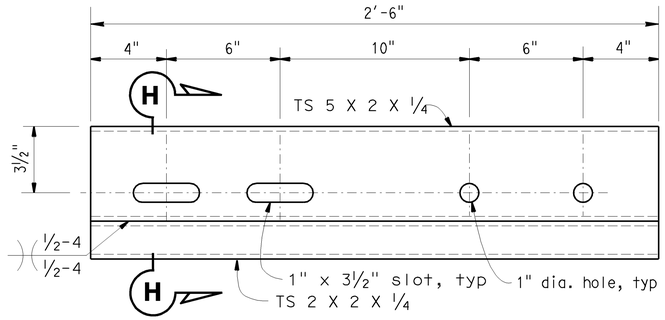

EXPANSION SLEEVE DETAIL

(For TS 8 X 3 X 5/16 rail)
SCALE 3 "= 1'

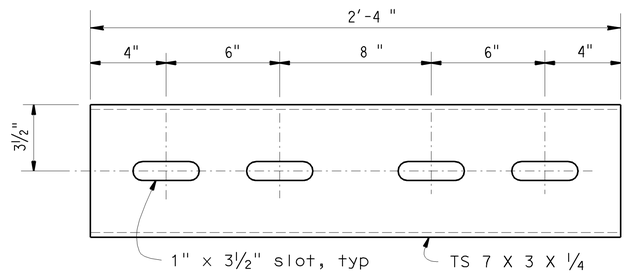

STANDARD SLEEVE DETAIL

(For TS 8 X 4 X 5/16 rail)
SCALE 3 "= 1'

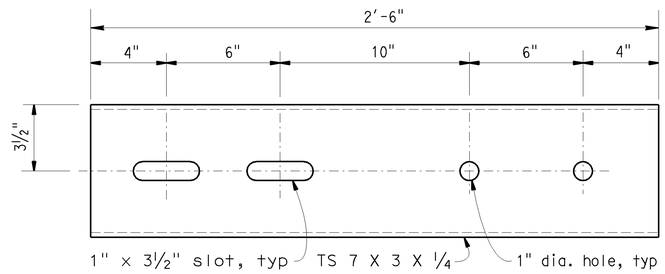

EXPANSION SLEEVE DETAIL

(For TS 8 X 4 X 5/16 rail)
SCALE 3 "= 1'

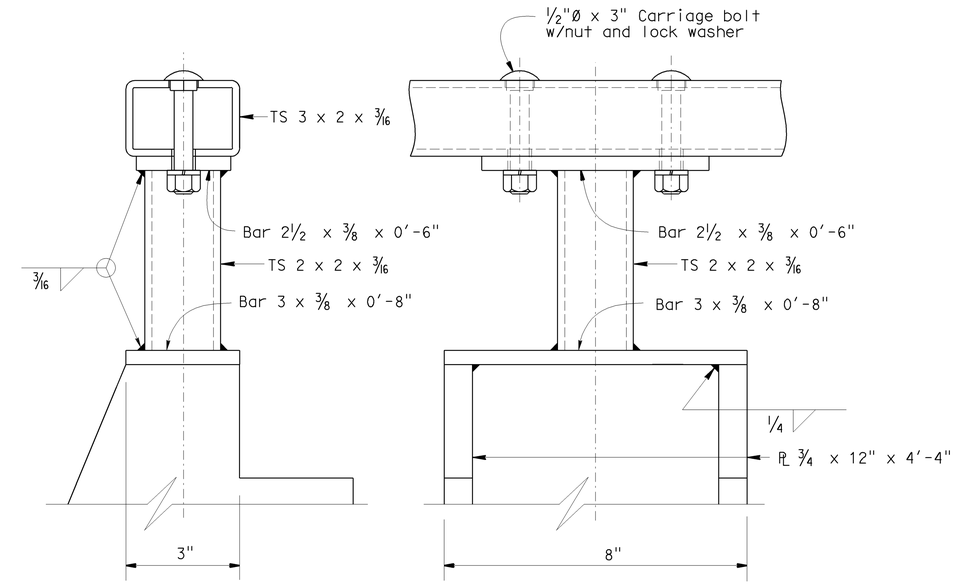

RAIL CONNECTION DETAILS

SCALE 6"= 1'

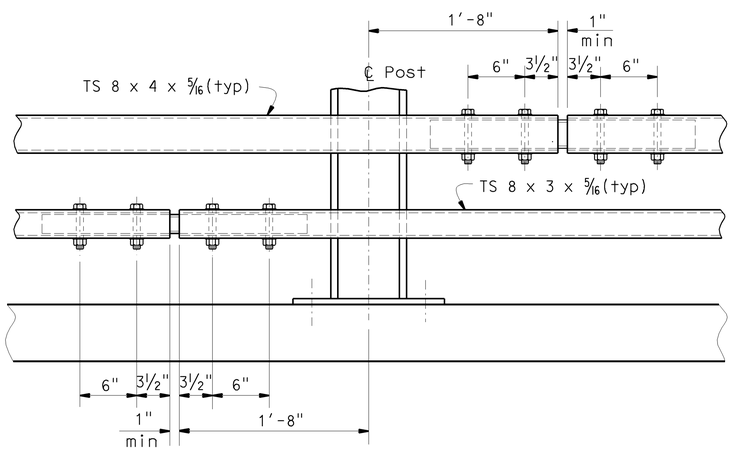

STANDARD SPLICE

SCALE 1 1/2"= 1'

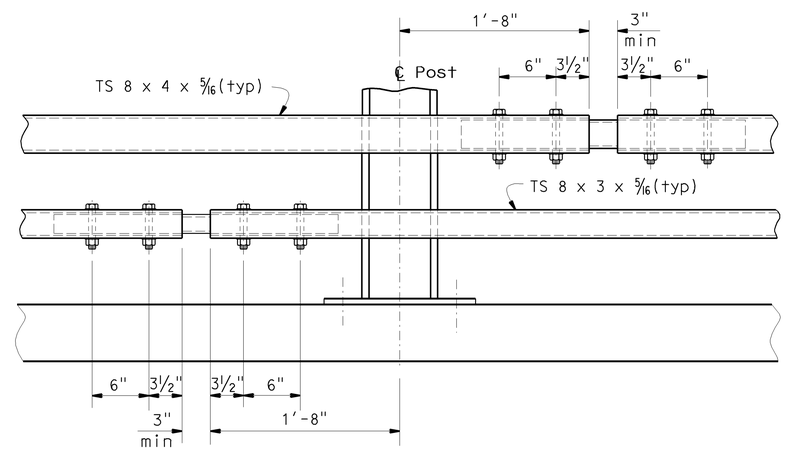

EXPANSION SPLICE

SCALE 1 1/2"= 1'

Use 3/4" ø x 5 1/4 (top rail)
and 3/4" ø x 4 1/4 (bottom rail)
HS bolts with washers,
1" holes in rail (typ)
Top 2 rails not shown for clarity.

STANDARD DRAWING

FILE NO. xs16-205-4e

APPROVED BY T SATTER
RESPONSIBLE TECHNICAL SPECIALIST
APPROVAL DATE 6-18-08

RELEASED BY ROBERTO LACALLE
RESPONSIBLE OFFICE CHIEF
RELEASE DATE 6-18-08

STATE OF CALIFORNIA
DEPARTMENT OF TRANSPORTATION

DIVISION OF ENGINEERING SERVICES

BRIDGE NO.

POST MILE

RAILING-CALIFORNIA STEEL TYPE ST-20S BRIDGE RAIL

DETAILS NO. 4

DS OSD 2147A (ENGLISH STANDARD DRAWING "XS" BORDER REV. 01/11/08)

ORIGINAL SCALE IN INCHES FOR REDUCED PLANS 0 1 2 3

CU
EA

DISREGARD PRINTS BEARING EARLIER REVISION DATES

REVISION DATES (PRELIMINARY STAGE ONLY)

SHEET 4 OF 4

USERNAME => rwu

xs16-205-4e.dgn

DATE PLOTTED => 30-JUN-2008 TIME PLOTTED => 12:13