DIST.	COUNTY	ROUTE	POST MILES TOTAL PROJECT	SHEET NO.	TOTAL SHEETS

REGISTERED ENGINEER - CIVIL

PLANS APPROVAL DATE

REGISTERED PROFESSIONAL ENGINEER No. Exp. CIVIL STATE OF CALIFORNIA

The State of California or its officers or agents shall not be responsible for the accuracy or completeness of electronic copies of this plan sheet.

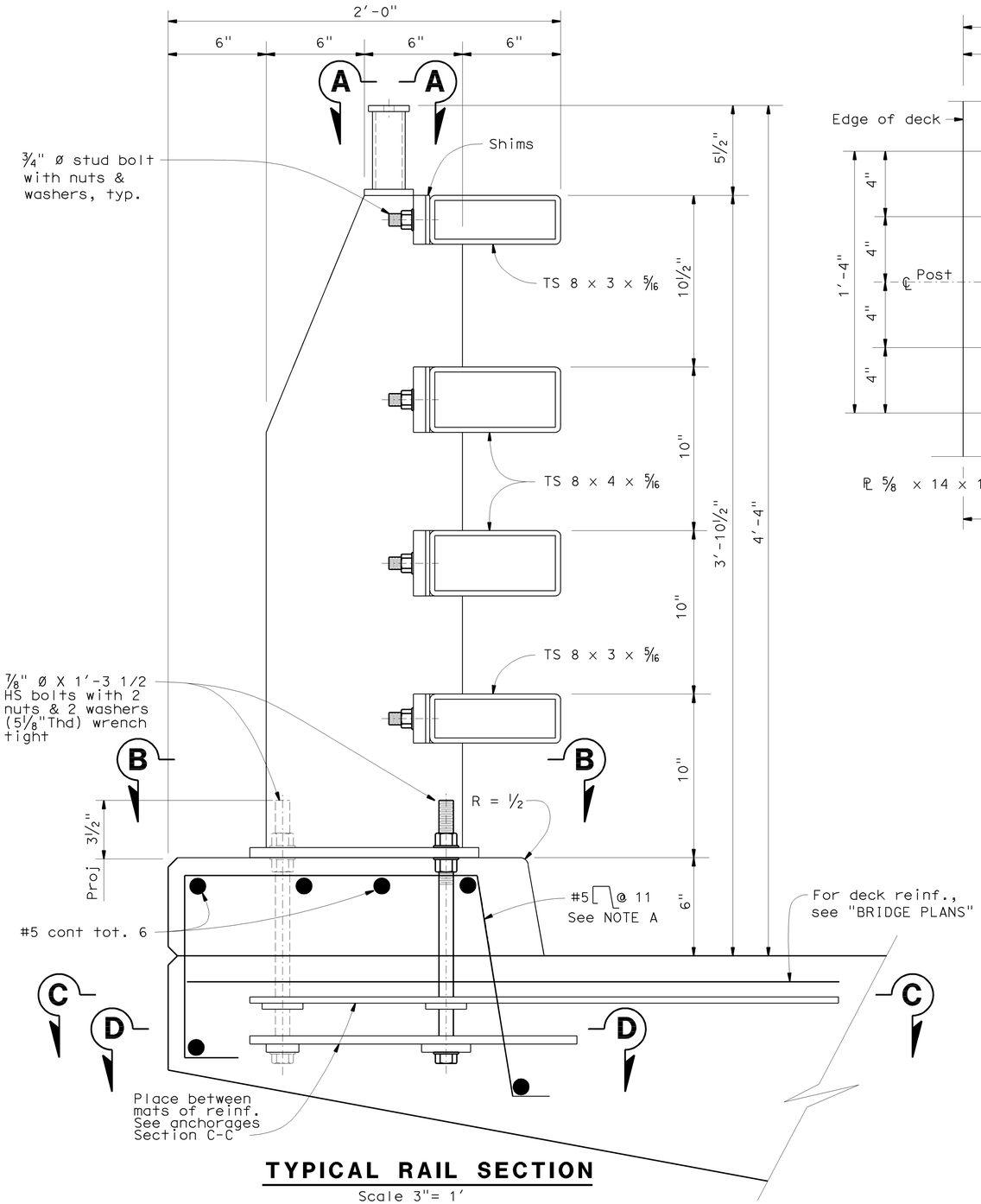

TYPICAL RAIL SECTION

Scale 3"= 1'

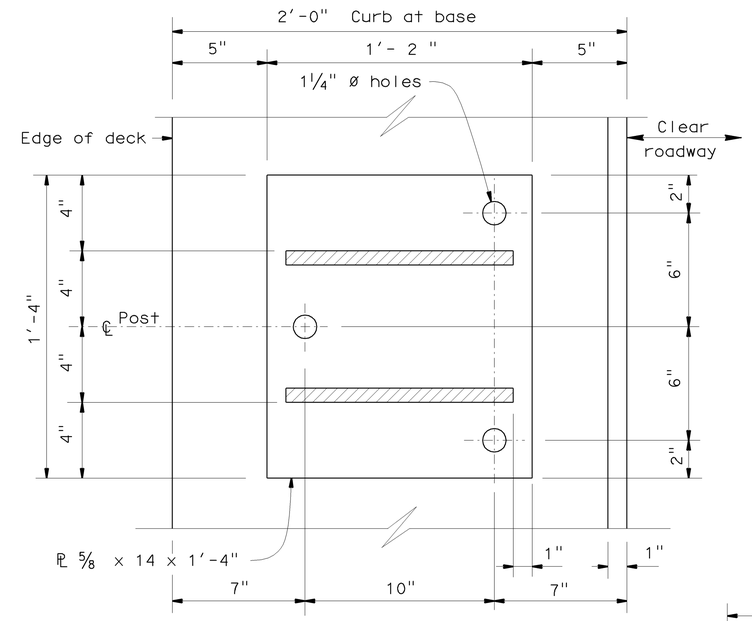

SECTION B-B

Scale 3"= 1'

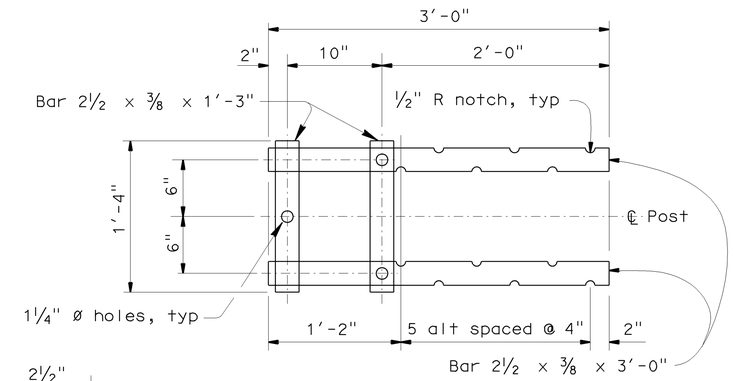

SECTION C-C

Top Anchorage
Scale 3"= 1'-0"

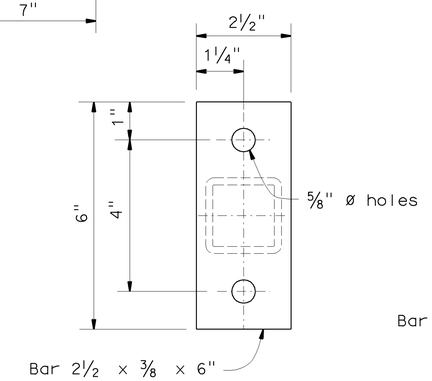

SECTION A-A

Scale 3"= 1'

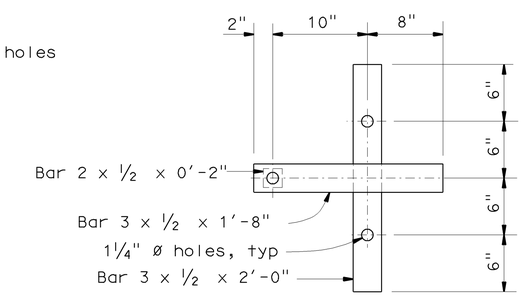

SECTION D-D

Lower Anchorage
Scale 3"= 1'-0"

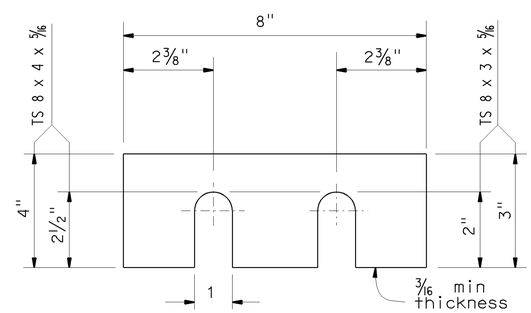

SHIMS REQUIRED FOR ALL RAILS

Scale 6"= 1'

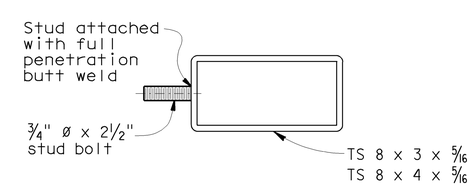

SECTION AT POST

Scale 3"= 1'-0"

STANDARD DRAWING		
FILE NO. xs16-205-1e	APPROVED BY T SATTER (RESPONSIBLE TECHNICAL SPECIALIST) APPROVAL DATE 6-18-08	RELEASED BY ROBERTO LACALLE (RESPONSIBLE OFFICE CHIEF) RELEASE DATE 6-18-08

STATE OF CALIFORNIA DEPARTMENT OF TRANSPORTATION

DIVISION OF ENGINEERING SERVICES

BRIDGE NO.

POST MILE

RAILING-CALIFORNIA STEEL TYPE ST-20S BRIDGE RAIL

DETAILS NO. 1

DS OSD 2147A (ENGLISH STANDARD DRAWING "XS" BORDER REV. 01/11/08)

ORIGINAL SCALE IN INCHES FOR REDUCED PLANS 0 1 2 3

CU EA

DISREGARD PRINTS BEARING EARLIER REVISION DATES

REVISION DATES (PRELIMINARY STAGE ONLY)

SHEET 1 OF 4

USERNAME => rwu

xs16-205-1e.dgn

DATE PLOTTED => 30-JUN-2008 TIME PLOTTED => 12:13