DIST.	COUNTY	ROUTE	POST MILES TOTAL PROJECT	SHEET NO.	TOTAL SHEETS

REGISTERED ENGINEER - CIVIL

PLANS APPROVAL DATE

REGISTERED PROFESSIONAL ENGINEER No. Exp. CIVIL STATE OF CALIFORNIA

The State of California or its officers or agents shall not be responsible for the accuracy or completeness of electronic copies of this plan sheet.

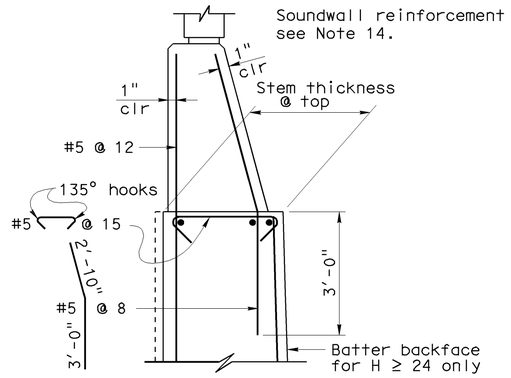

DETAIL A WITHOUT HAUNCH

No Scale

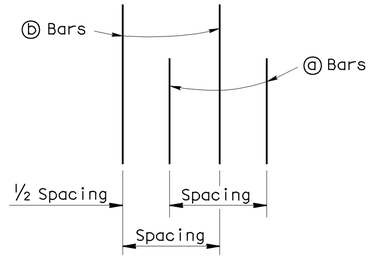

DETAIL B

No Scale

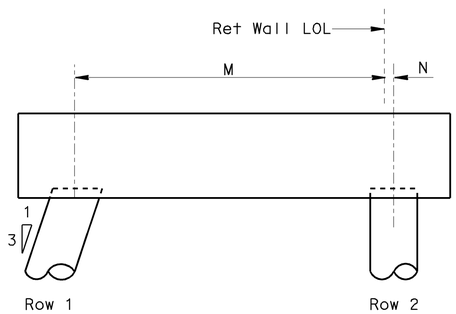

CONFIGURATION I

No Scale

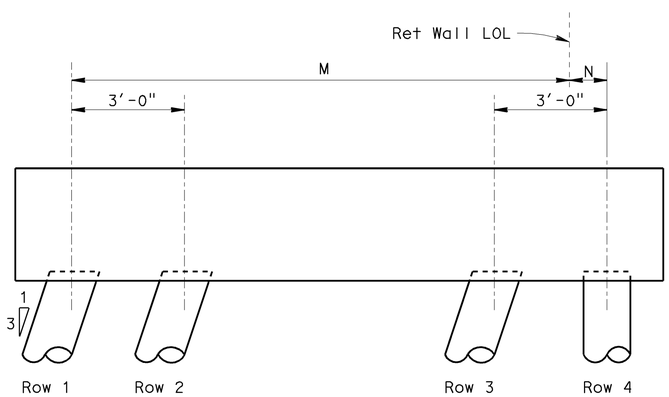

CONFIGURATION II

No Scale

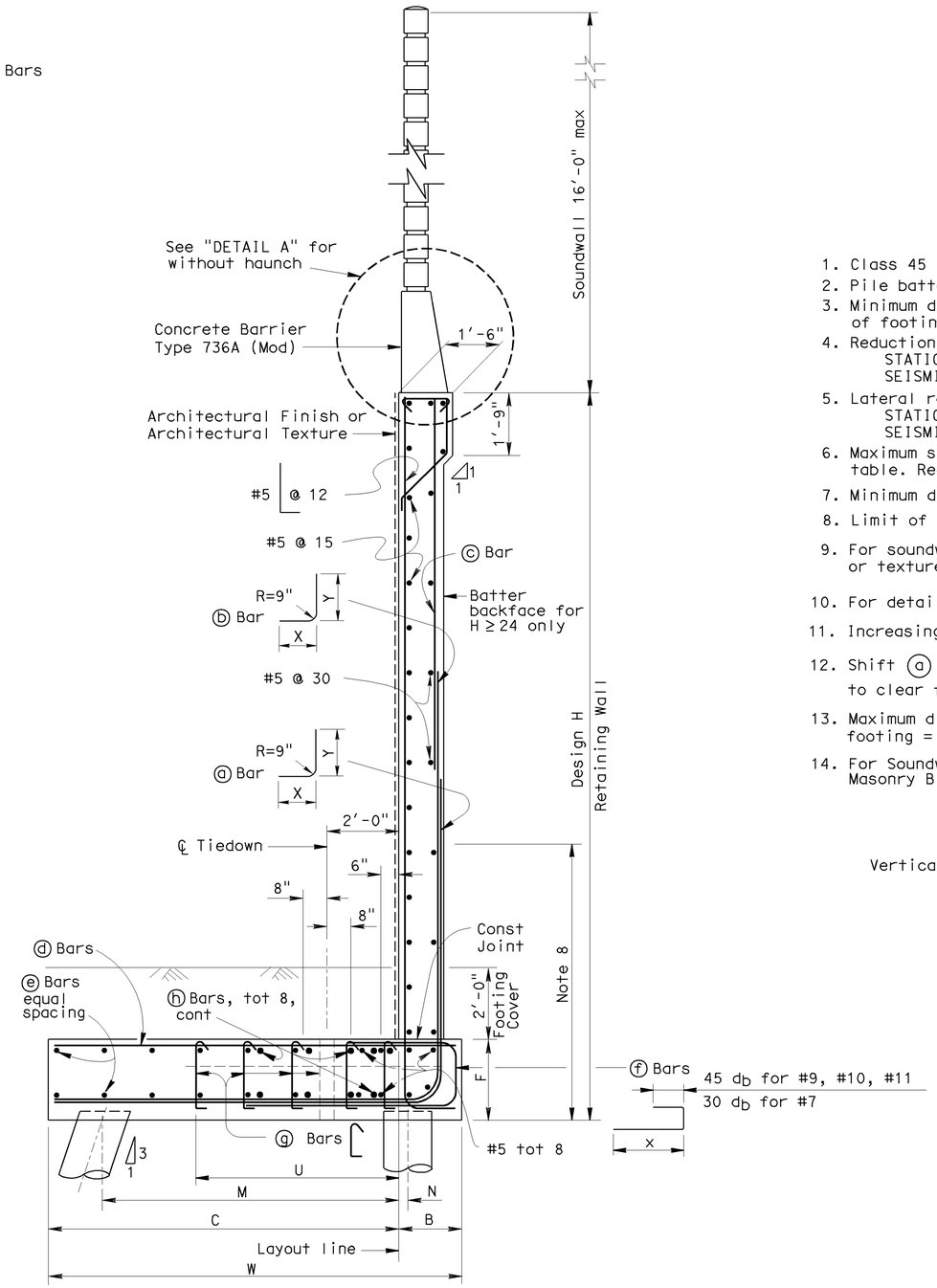

PILE FOOTING SECTION

No Scale

GENERAL NOTES

1. Class 45 Concrete Piles were used for the design.
2. Pile batter shown are 1:3.
3. Minimum distance between center of pile and edge of footing is 1'-6".
4. Reduction factors:
   STATIC: Ø = 0.75
   SEISMIC: Ø = 1.0
5. Lateral resistance of each pile:
   STATIC: = 30 kips
   SEISMIC: = 40 kips
6. Maximum spacing between piles is shown in the table. Reduce to suit the length of footing.
7. Minimum distance between any two piles is 3'-0".
8. Limit of no splicing for rebars = H/3.
9. For soundwall and retaining wall architectural finish or texture, see details elsewhere in project plans.
10. For details not shown and drainage notes, see B3-8 sheet.
11. Increasing stem thickness not permitted.
12. Shift ⓐ bars, ⓑ bars, and ⓒ bars as required to clear formed hole for tiedown.
13. Maximum distance from tiedown to edge of footing = 0.4 (S).
14. For Soundwall & Barrier reinforcement, see "Soundwall Masonry Block" Sheets in Standard Plans.

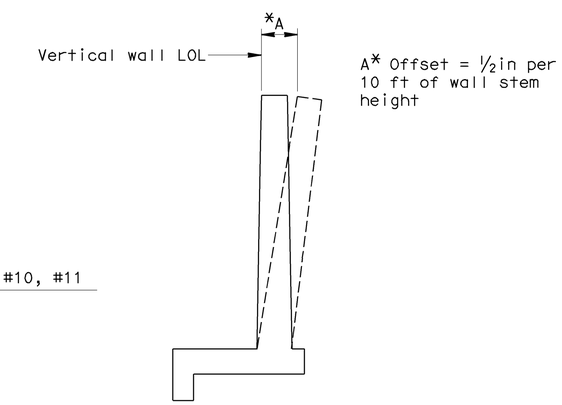

WALL OFFSET

No Scale

Values for offsetting forms to be determined by engineer

STANDARD DRAWING				
RELEASE DATE 12/1/05	DESIGN	BY MADON SAH	CHECKED LISA TANAKA	RELEASED BY
	DETAILS	BY R LASAT	CHECKED OVERCOMER HOR	
FILE NO. xs14-410-2e	SUBMITTED	BY OVERCOMER HOR	DRAWING DATE 12/1/05	OFFICE CHIEF

STATE OF CALIFORNIA DEPARTMENT OF TRANSPORTATION

DIVISION OF ENGINEERING SERVICES

BRIDGE NO.

POST MILE

RETAINING WALL TYPE 7SWBP - DETAIL NO. 2

DS OSD 2147A (REV. X/XX/XX)

ORIGINAL SCALE IN INCHES FOR REDUCED PLANS 0 1 2 3

CU
EA

DISREGARD PRINTS BEARING EARLIER REVISION DATES

REVISION DATES (PRELIMINARY STAGE ONLY) SHEET OF

USERNAME => rwu

xs14-410-2e.dgn

DATE PLOTTED => 24-MAR-2006 TIME PLOTTED => 13:35