DIST.	COUNTY	ROUTE	POST MILES TOTAL PROJECT	SHEET NO.	TOTAL SHEETS

REGISTERED ENGINEER - CIVIL

PLANS APPROVAL DATE

REGISTERED PROFESSIONAL ENGINEER No. Exp. CIVIL STATE OF CALIFORNIA

The State of California or its officers or agents shall not be responsible for the accuracy or completeness of electronic copies of this plan sheet.

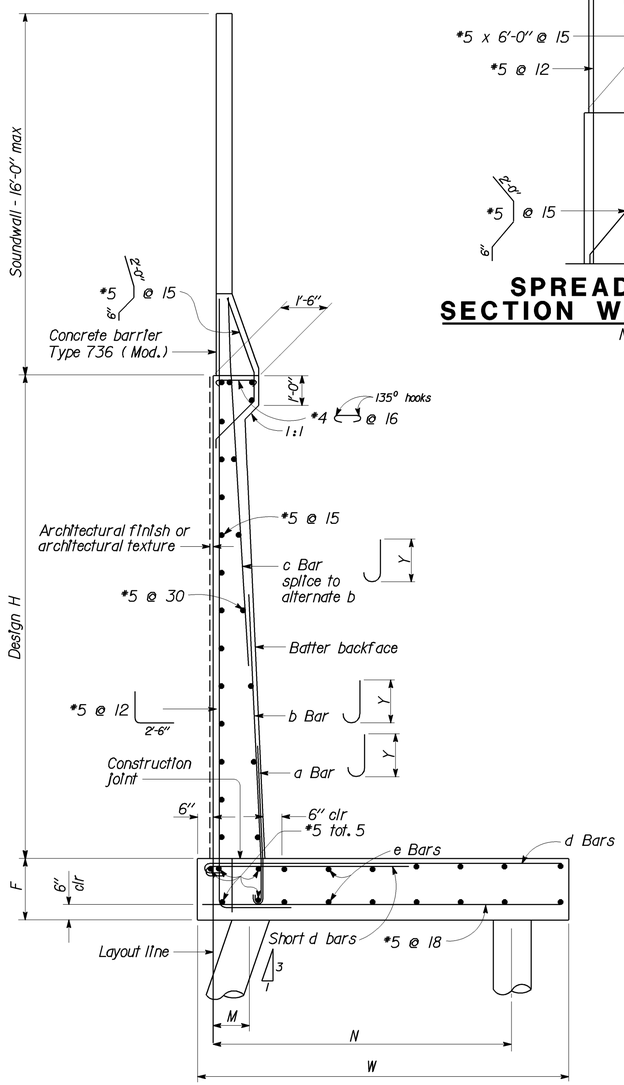

45T PILE FOOTING SECTION

NO SCALE

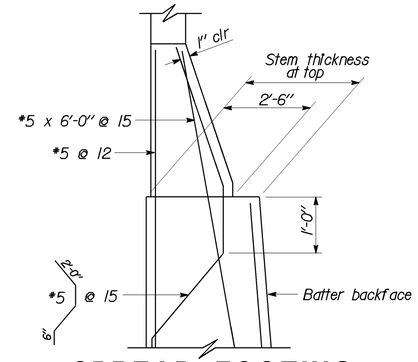

SPREAD FOOTING SECTION WITHOUT HAUNCH

NO SCALE

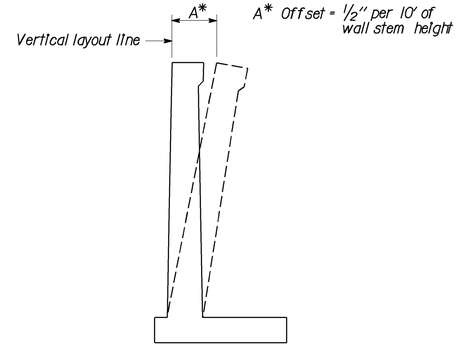

WALL OFFSET

NO SCALE

Values for offsetting forms to be determined by the engineer

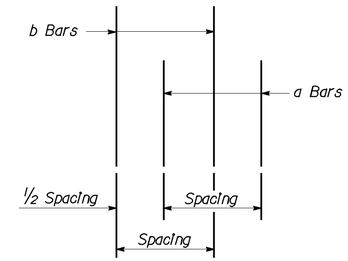

DETAIL A

NO SCALE

GENERAL NOTES

1. For soundwall and retaining wall architectural finish or texture, see details elsewhere in project plans.
2. For details not shown and drainage notes, see B3-8
3. Footing cover, 1'-6" minimum
4. For soundwall and reinforcements see "Soundwall Masonry Block" Sheets in Standard Plans.

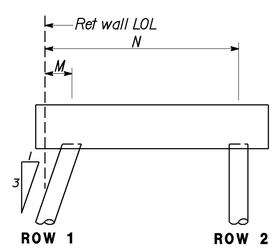

CONFIGURATION 1

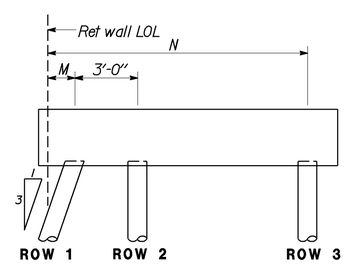

CONFIGURATION 2

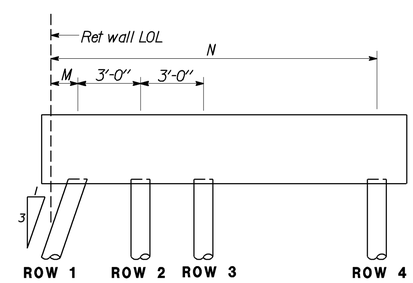

CONFIGURATION 3

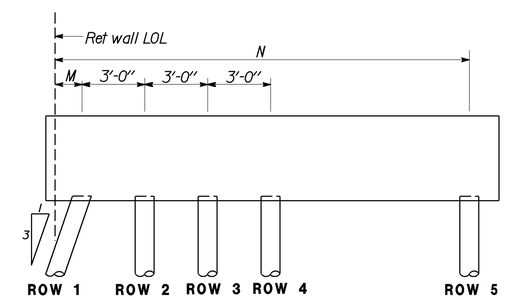

CONFIGURATION 4

STANDARD DRAWING				
RELEASE DATE 12/1/05	DESIGN	BY MADON SAH	CHECKED OVERCOMER HOR	RELEASED BY
	DETAILS	BY A R DUDSAK	CHECKED J.C. MOESE	
FILE NO. xs14-370-2e	SUBMITTED	BY OVERCOMER HOR	DRAWING DATE 12/1/05	OFFICE CHIEF

STATE OF CALIFORNIA DEPARTMENT OF TRANSPORTATION

DIVISION OF ENGINEERING SERVICES

BRIDGE NO.

POST MILE

RETAINING WALL TYPE 5SWBP - DETAIL NO. 2

DS OSD 2147A (REV. X/XX/XX)

ORIGINAL SCALE IN INCHES FOR REDUCED PLANS 0 1 2 3

CU EA

DISREGARD PRINTS BEARING EARLIER REVISION DATES

REVISION DATES (PRELIMINARY STAGE ONLY) SHEET OF

USERNAME => rwu

xs14-370-2e.dgn

DATE PLOTTED => 24-MAR-2006 TIME PLOTTED => 13:31