DIST.	COUNTY	ROUTE	POST MILES TOTAL PROJECT	SHEET NO.	TOTAL SHEETS

REGISTERED ENGINEER - CIVIL

PLANS APPROVAL DATE

REGISTERED PROFESSIONAL ENGINEER No. Exp. CIVIL STATE OF CALIFORNIA

The State of California or its officers or agents shall not be responsible for the accuracy or completeness of electronic copies of this plan sheet.

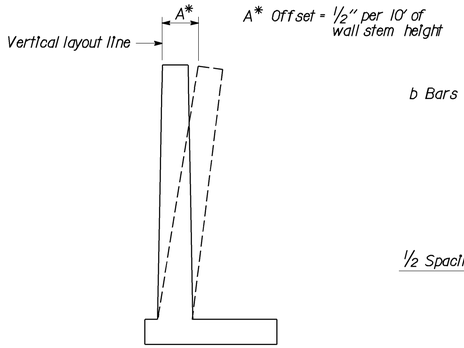

WALL OFFSET

NO SCALE

Values for offsetting forms to be determined by the engineer

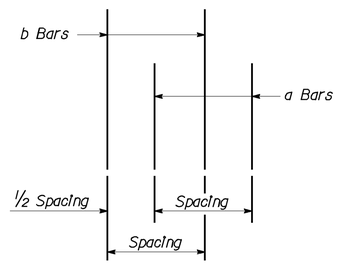

DETAIL A

NO SCALE

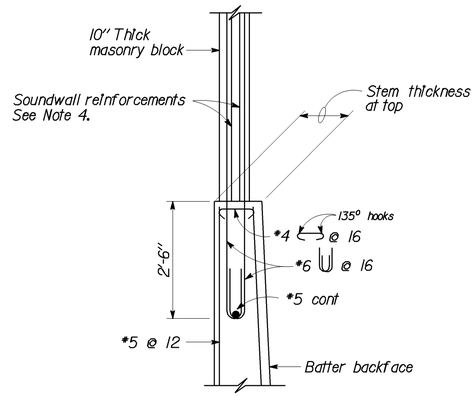

DETAIL B

NO SCALE

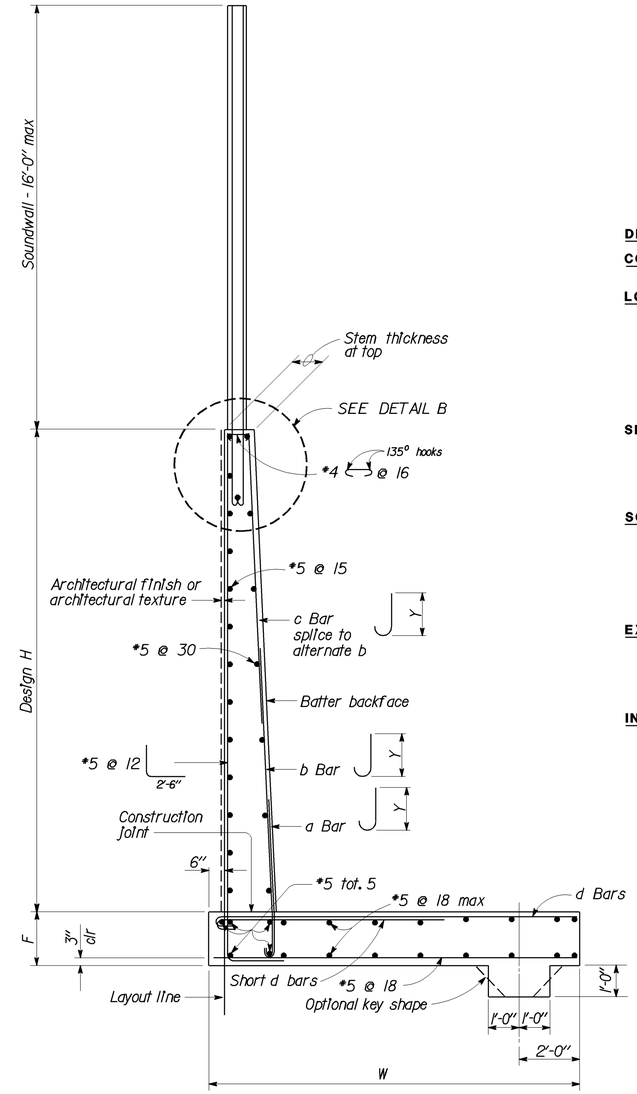

SPREAD FOOTING SECTION

NO SCALE

CONT = CONTINUOUS

* = a AND b [SHORT d & d] BARS ARE BUNDLED TOGETHER.

** = ALTERNATE a AND b BARS AS SHOWN IN DETAIL A.

ALTERNATE SHORT d AND d BARS.

DESIGN DATA

DESIGN: LOAD FACTOR DESIGN (LFD)

CONCRETE: REINFORCED CONCRETE, fc = 3600 psi
fy = 60000 psi

LOADING CASE:

LEVEL GROUND WITH 240 psf SURCHARGE AND 16' SOUNDWALL.

SEISMIC LOAD = 0.3 DEAD LOAD
WIND LOAD = 30 psf
DEAD LOAD OF SOUNDWALL = 1414 lb/lf
DEAD LOAD OF BARRIER = 372 lb/lf

SEISMIC LOAD: SOIL

K_h = 0.3g
K_v = 0.0
Kae : MONOBE-OKABE METHOD

SOIL: $\phi = 34^\circ$ $\gamma = 120$ pcf

EQUIVALENT FLUID PRESSURE:
= 36 pcf MAX. FOR DETERMINATION OF TOE PRESSURE
= 27 pcf MAX. FOR DETERMINATION OF HEEL PRESSURE

EXTERNAL STABILITY:

GROUP 1: D + E + SC
GROUP 2 : D + E + SC + W
GROUP 3 : D + PYM

INTERNAL STABILITY (LFD):

GROUP A : βD + 1.7 E + 1.7 SC
GROUP B : βD + 1.7 E + 1.3 W
GROUP C :
STEM : 1.0 D + 1.0 E + 1.0 EQD + 1.0 EQE
FOOTING : D + PYM

WHERE : β = 1.0 OR 1.3 WHICHEVER CONTROLS DESIGN
D = DEAD LOAD
E = LATERAL EARTH PRESSURE
SC = SURCHARGE
W = WIND LOAD
EQD = SEISMIC DEAD LOAD
EQE = SEISMIC LATERAL EARTH PRESSURE
PYM = PROBABLE YIELD MOMENT (1.3* NOMINAL YIELD MOMENT OF STEM)

GENERAL NOTES

1. FOR SOUNDWALL AND RETAINING WALL ARCHITECTURAL FINISH OR TEXTURE SEE DETAILS ELSEWHERE IN PROJECT PLANS.
2. FOR DETAILS NOT SHOWN AND DRAINAGE NOTES, SEE B3-8
3. FOOTING COVER, 1'-6" MINIMUM.
4. FOR SOUNDWALL AND REINFORCEMENTS SEE "SOUNDWALL MASONRY BLOCK" SHEETS IN STANDARD PLANS.

ALTERNATIVE A : (CONSTANT TOP OF WALL THICKNESS) TABLE OF REINFORCING STEEL DIMENSIONS AND DATA

DESIGN H	6'	8'	10'	12'	14'	16'	18'	20'	22'	24'	26'	28'	30'	32'
W	8'-6"	8'-6"	9'-3"	10'-0"	11'-3"	12'-3"	13'-3"	14'-6"	15'-9"	17'-0"	18'-6"	20'-0"	21'-3"	22'-9"
F SPREAD FTG.	1'-3"	1'-3"	1'-3"	1'-6"	1'-6"	1'-9"	2'-0"	2'-0"	2'-3"	2'-6"	3'-0"	3'-3"	3'-9"	4'-0"
BATTER	0	1/2 :12	1/2 :12	1/2 :12	1/2 :12	1/2 :12	1/2 :12	1/2 :12	1/2 :12	5/8 :12	3/4 :12	7/8 :12	1 :12	1 :12
STEM THICKN @ TOP	1'-0"	1'-0"	1'-0"	1'-0"	1'-0"	1'-0"	1'-0"	1'-0"	1'-0"	1'-0"	1'-0"	1'-0"	1'-0"	1'-0"
a BARS				*6 @ 18**	*7 @ 18**	*8 @ 18**	*9 @ 18**	*10 @ 18**	*8 @ 9*	*8 @ 9*	*7 @ 6*	*10 @ 12**	*9 @ 9*	*11 @ 12**
Y				8'-0"	6'-6"	7'-6"	8'-0"	9'-0"	9'-6"	11'-0"	11'-6"	13'-0"	14'-0"	15'-6"
b BARS	*5 @ 12	*5 @ 12	*5 @ 9	*6 @ 18**	*7 @ 18**	*8 @ 18**	*9 @ 18**	*10 @ 18**	*8 @ 9*	*8 @ 9*	*7 @ 6*	*10 @ 12**	*9 @ 9*	*11 @ 12**
Y	CONT	CONT	CONT	CONT	10'-6"	13'-0"	15'-0"	17'-6"	19'-6"	21'-0"	18'-6"	19'-0"	25'-6"	23'-6"
c BARS					*6 @ 18	*6 @ 18	*6 @ 18	*6 @ 18	*6 @ 18	*6 @ 18	*6 @ 12	*7 @ 12	*7 @ 18	*7 @ 12
SHORT d BARS	*5 @ 12	*5 @ 9	*6 @ 9	*7 @ 18**	*8 @ 18**	*8 @ 18**	*9 @ 18**	*10 @ 18**	*8 @ 9*	*8 @ 9*	*7 @ 6*	*10 @ 12*	*9 @ 9*	*11 @ 12**
X	CONT	CONT	CONT	5'-6"	6'-6"	7'-6"	8'-0"	8'-6"	9'-6"	10'-6"	11'-6"	12'-6"	13'-0"	15'-0"
d BARS				*7 @ 18**	*8 @ 18**	*8 @ 18**	*9 @ 18**	*10 @ 18**	*8 @ 9*	*8 @ 9*	*7 @ 6*	*10 @ 12*	*9 @ 9*	*11 @ 12**
X				CONT	CONT	CONT	CONT	CONT	CONT	CONT	CONT	CONT	CONT	CONT
ULTIMATE BEARING CAPACITY REQUIRED k/sf	6.3	7.8	8.8	10.3	11.4	13.2	15	16.2	17.8	19.4	21.1	22.4	24.4	25.8

ALTERNATIVE B : (VARIABLE TOP OF WALL THICKNESS) TABLE OF REINFORCING STEEL DIMENSIONS AND DATA

DESIGN H		8'	10'	12'	14'	16'	18'	20'	22'	24'	26'	28'	30'	32'
W		8'-6"	9'-0"	9'-9"	10'-6"	12'-6"	13'-3"	14'-3"	16'-3"	17'-0"	18'-9"	20'-3"	21'-3"	22'-6"
F SPREAD FTG.		1'-3"	1'-3"	1'-3"	1'-3"	1'-6"	1'-6"	1'-9"	2'-3"	2'-3"	2'-9"	3'-3"	3'-9"	3'-9"
BATTER		0	0	0	0	0	0	0	0	0	1/4 :12	1/2 :12	1/2 :12	1/2 :12
STEM THICKN @ TOP		1'-0"	1'-0"	1'-0"	1'-0"	1'-3"	1'-3"	1'-6"	2'-0"	2'-0"	2'-0"	2'-0"	2'-0"	2'-0"
a BARS				*6 @ 12**	*5 @ 6*	*8 @ 12**	*8 @ 9*	*9 @ 12**	*9 @ 12**	*7 @ 6*	*7 @ 6*	*7 @ 6*	*9 @ 9*	*11 @ 12**
Y				5'-6"	5'-6"	6'-0"	6'-6"	8'-0"	8'-6"	9'-6"	11'-0"	12'-6"	13'-6"	14'-6"
b BARS		*5 @ 9	*6 @ 9	*6 @ 12**	*5 @ 6*	*8 @ 12**	*8 @ 9*	*9 @ 12**	*9 @ 12**	*7 @ 6*	*7 @ 6*	*7 @ 6*	*9 @ 9*	*11 @ 12**
Y		CONT	CONT	CONT	CONT	8'-6"	11'-0"	11'-0"	11'-6"	17'-0"	19'-6"	21'-6"	24'-0"	24'-0"
c BARS						*6 @ 12	*7 @ 18	*7 @ 12	*7 @ 12	*6 @ 12	*6 @ 12	*6 @ 12	*7 @ 18	*7 @ 12
SHORT d BARS		*5 @ 9	*6 @ 9	*7 @ 18**	*5 @ 6*	*8 @ 12**	*8 @ 9*	*9 @ 12**	*9 @ 12**	*7 @ 6*	*9 @ 6*	*9 @ 6*	*9 @ 9*	*8 @ 6*
X		CONT	CONT	6'-0"	5'-6"	7'-0"	8'-6"	9'-0"	10'-0"	11'-0"	12'-0"	13'-0"	14'-0"	15'-0"
d BARS				*7 @ 18**	*5 @ 6*	*9 @ 18**	*8 @ 9*	*9 @ 12**	*9 @ 12**	*7 @ 6*	*9 @ 6*	*9 @ 6*	*9 @ 9*	*8 @ 6*
X				CONT	CONT	CONT	CONT	CONT	CONT	CONT	CONT	CONT	CONT	CONT
ULTIMATE BEARING CAPACITY REQUIRED k/sf		7.8	9	10.3	11.8	12.6	14.3	16.2	17.3	19.1	20.6	22.3	24.5	25.8

STANDARD DRAWING

RELEASE DATE 12/1/05	DESIGN BY MADON SAH	CHECKED OVERCOMER HOR	RELEASED BY
FILE NO. xs14-340e	DETAILS BY A R DUDSAK	CHECKED J.C. MOESE	OFFICE CHIEF
	SUBMITTED BY OVERCOMER HOR	DRAWING DATE 12/1/05	

DS OSD 2147A (REV. X/XX/XX)

ORIGINAL SCALE IN INCHES FOR REDUCED PLANS 0 1 2 3

STATE OF CALIFORNIA DEPARTMENT OF TRANSPORTATION

DIVISION OF ENGINEERING SERVICES

CU
EA

BRIDGE NO.

POST MILE

RETAINING WALL TYPE 5SW

DISREGARD PRINTS BEARING EARLIER REVISION DATES

REVISION DATES (PRELIMINARY STAGE ONLY) SHEET OF

USERNAME => rwu

xs14-340e.dgn

DATE PLOTTED => 24-MAR-2006 TIME PLOTTED => 13:27