DIST.	COUNTY	ROUTE	POST MILES TOTAL PROJECT	SHEET NO.	TOTAL SHEETS

REGISTERED ENGINEER - CIVIL

PLANS APPROVAL DATE

REGISTERED PROFESSIONAL ENGINEER No. Exp. CIVIL STATE OF CALIFORNIA

The State of California or its officers or agents shall not be responsible for the accuracy or completeness of electronic copies of this plan sheet.

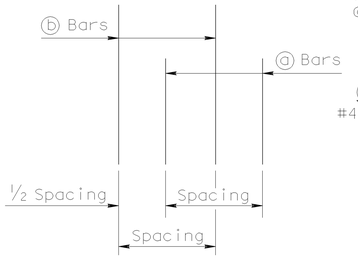

DETAIL B

No Scale

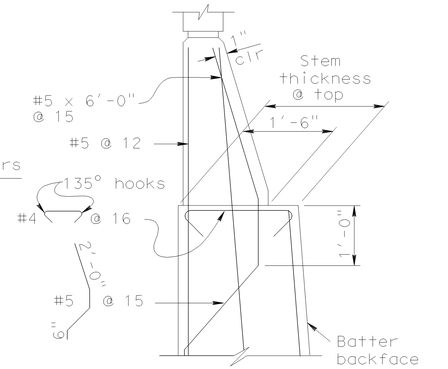

DETAIL A WITHOUT HAUNCH

No Scale

GENERAL NOTES

1. For soundwall and retaining wall architectural finish or texture, see details elsewhere in project plans.
2. For details not shown and drainage notes, see B3-8
3. Footing cover, 1'-6" minimum.
4. Limit of no splicing rebars = 3 times the bottom thickness of the stem.
5. Placement of reinforcements :
   - ⓑ & ⓒ bars are spliced together.
   - * ⓐ & ⓑ bars are bundled together.
   - ** Alternate ⓐ & ⓑ bars are shown in "Detail B".
   - Cont = Continuous.
6. For Soundwall & Barrier reinforcement, see "Soundwall Masonry Block on Barriers" sheets in Standard Plans.

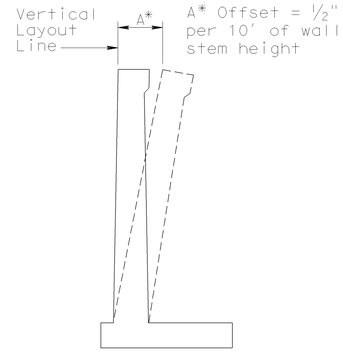

WALL OFFSET

No Scale

Values for offsetting forms to be determined by the Engineer.

TABLE 1: TABLE OF REINFORCING STEEL DIMENSIONS AND DATA

	Stem With Haunch													
Design H	6'	8'	10'	12'	14'	16'	18'	20'	22'	24'	26'	28'	30'	32'
W	7'-9"	8'-0"	8'-9"	9'-9"	10'-9"	12'-0"	13'-0"	14'-3"	15'-3"	16'-6"	18'-6"	19'-9"	21'-3"	22'-6"
C	2'-9"	2'-9"	3'-0"	3'-3"	3'-6"	4'-0"	4'-3"	4'-9"	5'-0"	5'-6"	6'-3"	6'-9"	7'-3"	7'-9"
B	5'-0"	5'-3"	5'-9"	6'-6"	7'-3"	8'-0"	8'-9"	9'-6"	10'-3"	11'-0"	12'-3"	13'-0"	14'-0"	14'-9"
F Spread footing	1'-3"	1'-3"	1'-3"	1'-3"	1'-3"	1'-6"	1'-6"	1'-9"	2'-0"	2'-3"	2'-9"	3'-0"	3'-3"	3'-9"
Batter	0	½ :12	½ :12	½ :12	½ :12	½ :12	½ :12	½ :12	½ :12	⅝ :12	¾ :12	⅞ :12	1 :12	1 :12
Stem thickn. @ Haunch	1'-0"	1'-0"	1'-0"	1'-0"	1'-0"	1'-0"	1'-0"	1'-0"	1'-0"	1'-0"	1'-0"	1'-0"	1'-0"	1'-0"
ⓐ Bars				#6 @18**	#7 @18**	#8 @18**	#9 @18**	#10 @18**	#8 @ 9*	#8 @ 9*	#7 @ 6*	#10@12**	#9 @ 9*	#11@12**
X				Cont	Cont	Cont	Cont	Cont	Cont	Cont	Cont	Cont	Cont	Cont
Y				8'-0"	6'-6"	7'-6"	8'-6"	9'-6"	9'-6"	11'-0"	11'-6"	13'-0"	14'-0"	15'-6"
ⓑ Bars	#5 @12	#5 @12	#5 @ 9	#6 @18**	#7 @18**	#8 @18**	#9 @18**	#10 @18**	#8 @ 9*	#8 @ 9*	#7 @ 6*	#10@12**	#9 @ 9*	#11@12**
X	Cont	Cont	Cont	Cont	Cont	Cont	Cont	Cont	Cont	5'-6"	6'-6"	7'-0"	8'-0"	8'-6"
Y	Cont	Cont	Cont	Cont	10'-6"	13'-0"	15'-0"	17'-6"	19'-6"	21'-0"	18'-6"	19'-0"	25'-6"	23'-6"
ⓒ Bars					#6 @18	#6 @18	#6 @18	#6 @18	#6 @18	#6 @18	#6 @12	#7 @12	#7 @18	#7 @12
ⓓ Bars	#5 @12	#5 @12	#5 @12	#5 @ 9	#6 @ 9	#6 @ 9	#6 @ 6	#8 @ 9	#8 @ 9	#8 @ 9	#7 @ 6	#7 @ 6	#9 @ 9	#9 @ 9
Ultimate Bearing Capacity Req'd k/sf	4.6	5.5	6.1	6.6	7.3	8.1	9.0	9.9	11.3	12.2	12.5	13.4	14.1	15.4

TABLE 2: TABLE OF REINFORCING STEEL DIMENSIONS AND DATA

	Stem With Haunch						Stem Without Haunch						
Design H	8'	10'	12'	14'	16'	18'	20'	22'	24'	26'	28'	30'	32'
W	8'-0"	8'-6"	9'-3"	10'-3"	11'-3"	13'-0"	13'-9"	16'-0"	16'-6"	18'-6"	20'-0"	20'-6"	21'-9"
C	2'-9"	2'-9"	3'-0"	3'-6"	3'-9"	4'-3"	4'-6"	5'-3"	5'-6"	6'-3"	6'-9"	6'-9"	7'-6"
B	5'-3"	5'-9"	6'-3"	6'-9"	7'-6"	8'-9"	9'-3"	10'-9"	11'-0"	12'-3"	13'-3"	13'-9"	14'-3"
F Spread footing	1'-3"	1'-3"	1'-3"	1'-3"	1'-6"	1'-6"	1'-9"	2'-0"	2'-3"	2'-9"	3'-0"	3'-3"	3'-6"
Batter	0	0	0	0	0	0	0	0	0	¼ :12	½ :12	½ :12	½ :12
Stem thickn. @ Haunch	1'-0"	1'-0"	1'-0"	1'-0"	1'-3"	1'-3"							
Stem thickn. @ top							1'-6"	2'-0"	2'-0"	2'-0"	2'-0"	2'-0"	2'-0"
ⓐ Bars			#6 @12**	#5 @ 6*	#9 @18**	#9 @12**	#9 @12**	#9 @12**	#7 @ 6*	#7 @ 6*	#7 @ 6*	#9 @ 9*	#11@12**
X			Cont	Cont	Cont	Cont	Cont	Cont	Cont	Cont	Cont	Cont	Cont
Y			5'-6"	5'-6"	8'-6"	8'-6"	8'-6"	8'-6"	9'-6"	11'-0"	12'-6"	13'-6"	14'-6"
ⓑ Bars	#5 @ 9	#6 @ 9	#6 @12**	#5 @ 6*	#9 @18**	#9 @12**	#9 @12**	#9 @12**	#7 @ 6*	#7 @ 6*	#7 @ 6*	#9 @ 9*	#11@12**
X	Cont	Cont	Cont	Cont	Cont	Cont	Cont	Cont	5'-6"	6'-0"	7'-6"	7'-6"	8'-0"
Y	Cont	Cont	Cont	Cont	11'-6"	11'-6"	12'-0"	12'-0"	17'-6"	20'-0"	21'-6"	24'-0"	24'-0"
ⓒ Bars					#7 @18	#7 @12	#7 @12	#7 @12	#6 @ 12	#6 @ 12	#6 @12	#7 @18	#7 @12
ⓓ Bars	#5 @12	#5 @ 9	#5 @9	#6 @9	#6 @ 9	#9 @12	#9 @12	#7 @#7	6 @ 6	#7 @ 6	#7 @ 6	#9 @ 9	#9 @ 9
Ultimate Bearing Capacity Req'd k/sf	5.5	6.5	7.3	7.6	9.0	9.0	10.6	10.5	12.2	12.6	13.3	15.4	16.0

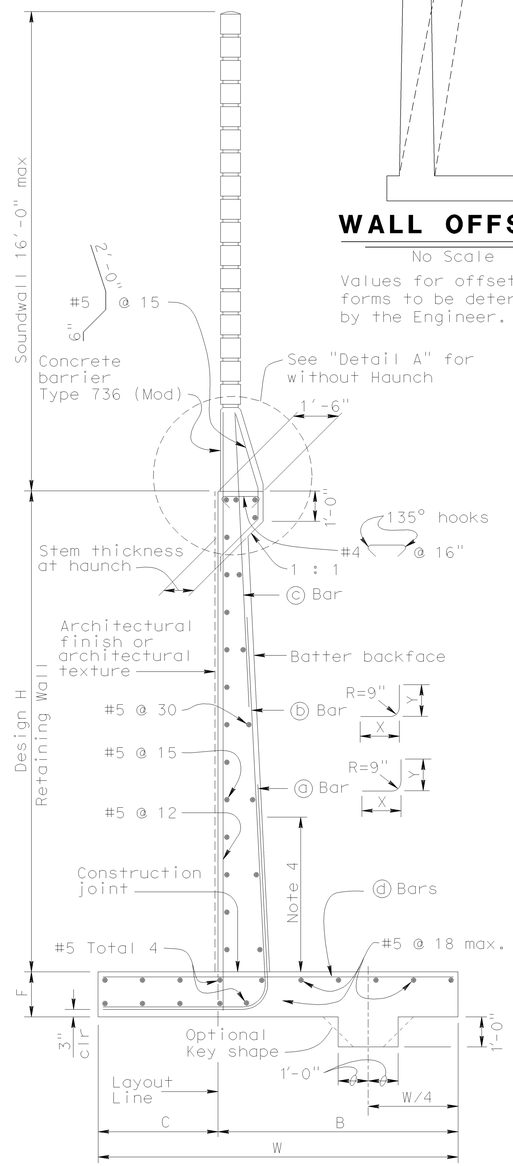

SPREAD FOOTING SECTION

No Scale

DESIGN DATA

DESIGN: Load Factor Design (LFD)

CONCRETE: Reinforced Concrete, f'c = 3600 psi
fy = 60,000 psi

LOADING CASE:
Level ground with 240 psf surcharge and 16' Soundwall

Seismic Load = 0.3 Dead Load
Wind Load = 30 psf
Dead Load of Soundwall = 1414 lb/ft
Dead Load of Barrier = 372 lb/ft

SEISMIC LOAD: SOIL
Kh = 0.3g
Kv = 0.0
Kae : Mononobe-Okabe Method

SOIL: Ø = 34° γ = 120 pcf
Equivalent fluid pressure:
= 36 pcf for determination of toe pressure
= 27 pcf for determination of heel pressure

EXTERNAL STABILITY:
Group 1 : D + E + SC
Group 2 : D + E + SC + W
Group 3 : D + PYM

INTERNAL STABILITY (LFD):
Group A : βD + 1.7E + 1.7SC
Group B : βD + 1.7E + 1.3W
Group C (stem) : 1.0D + 1.0E + 1.0EQD + 1.0EQE
Group C (footing) : D + PYM

Where : β = 1.0 or 1.3 whichever controls design
D = Dead Load
E = Lateral Earth Pressure
SC = Surcharge
W = Wind load
EQD = Seismic Dead Load
EQE = Seismic Lateral Earth Pressure
PYM = Probable Yield Moment (1.3 x Nominal Yield Moment of Stem)

STANDARD DRAWING

RELEASE DATE 12/1/05	DESIGN BY MADON SAH	CHECKED OVERCOMER HOR	RELEASED BY
FILE NO. xs14-220e	DETAILS BY R LASAT	CHECKED J.C. MOESE	OFFICE CHIEF
	SUBMITTED BY OVERCOMER HOR	DRAWING DATE 12/1/05	

STATE OF CALIFORNIA DEPARTMENT OF TRANSPORTATION

DIVISION OF ENGINEERING SERVICES

BRIDGE NO.

POST MILE

RETAINING WALL TYPE 1SWB

DS OSD 2147A (REV. X/XX/XX)

ORIGINAL SCALE IN INCHES FOR REDUCED PLANS 0 1 2 3

CU
EA

DISREGARD PRINTS BEARING EARLIER REVISION DATES

REVISION DATES (PRELIMINARY STAGE ONLY) SHEET OF

USERNAME => $USER

$REQUEST

DATE PLOTTED => $DATE

TIME PLOTTED => $TIME