DIST.	COUNTY	ROUTE	POST MILES TOTAL PROJECT	SHEET NO.	TOTAL SHEETS

REGISTERED ENGINEER - CIVIL

PLANS APPROVAL DATE

REGISTERED PROFESSIONAL ENGINEER No. Exp. CIVIL STATE OF CALIFORNIA

The State of California or its officers or agents shall not be responsible for the accuracy or completeness of electronic copies of this plan sheet.

NOTES:

1. Low end of subgrade drain shown, at high end install cap at end of ¾" slotted pipe. Subgrade drain located at end of structure approach slab, see "Subgrade Drain Detail".
2. Not all barrier reinforcement shown.
3. Outlet details shown elsewhere in Project Plans.
4. At acute corners of approach slab, bend reinforcement as required to clear expansion joint.
5. Specific concrete barrier to be utilized as shown on typical section elsewhere in Project Plans.

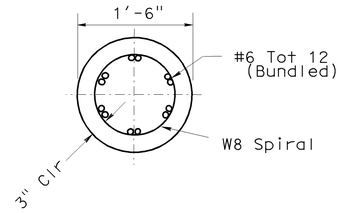

SECTION A-A

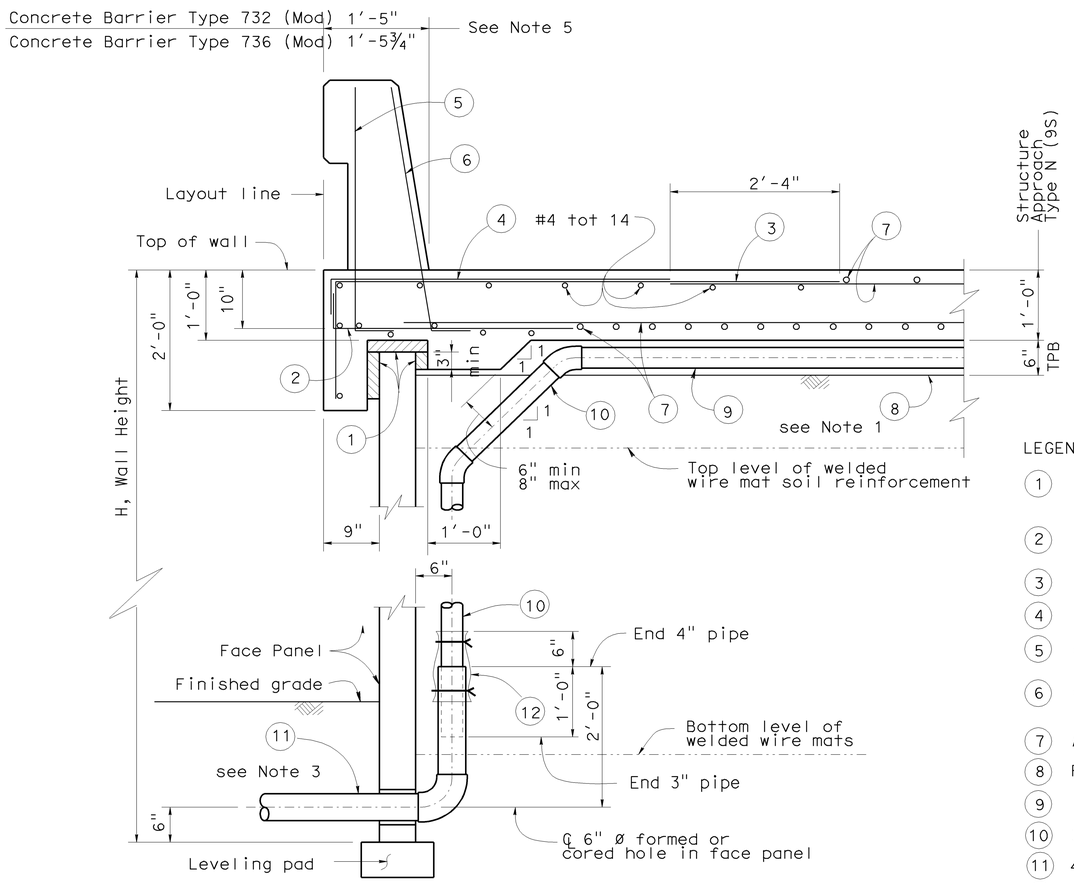

SECTION AT TOP OF WALL WITH STRUCTURE APPROACH SLAB AND CONCRETE BARRIER

LEGEND:

1. 2" Expanded polystyrene recessed 2" into barrier slab at front of MSE face panel.
2. #5 6'-¼" / 3'-4" @ 1'-0"
3. #5 6'-10⅝" @ 1'-0"
4. #5 4'-7" @ 1'-0" bundle with 3 bars.
5. #5 L @ 1'-4" (To be in place prior to 6¼" approach slab concrete).
6. #5 L @ 8" (To be in place prior to 6¼" approach slab concrete).
7. Approach slab reinforcement.
8. Filter fabric.
9. 3" Plastic pipe (slotted).
10. 3" Plastic pipe and fittings (unslotted).
11. 4" Sch 80 PVC outlet pipe and fittings (unslotted).
12. 1'-0" wide x 2'-0" filter fabric wrapped around pipe and secured with nylon ties.
13. 1" Expanded polystyrene.
14. Five elastomeric bearing pads ¾" x 4" x 6" bonded to top of MSE face panel.
15. 0.5" Expanded polystyrene.

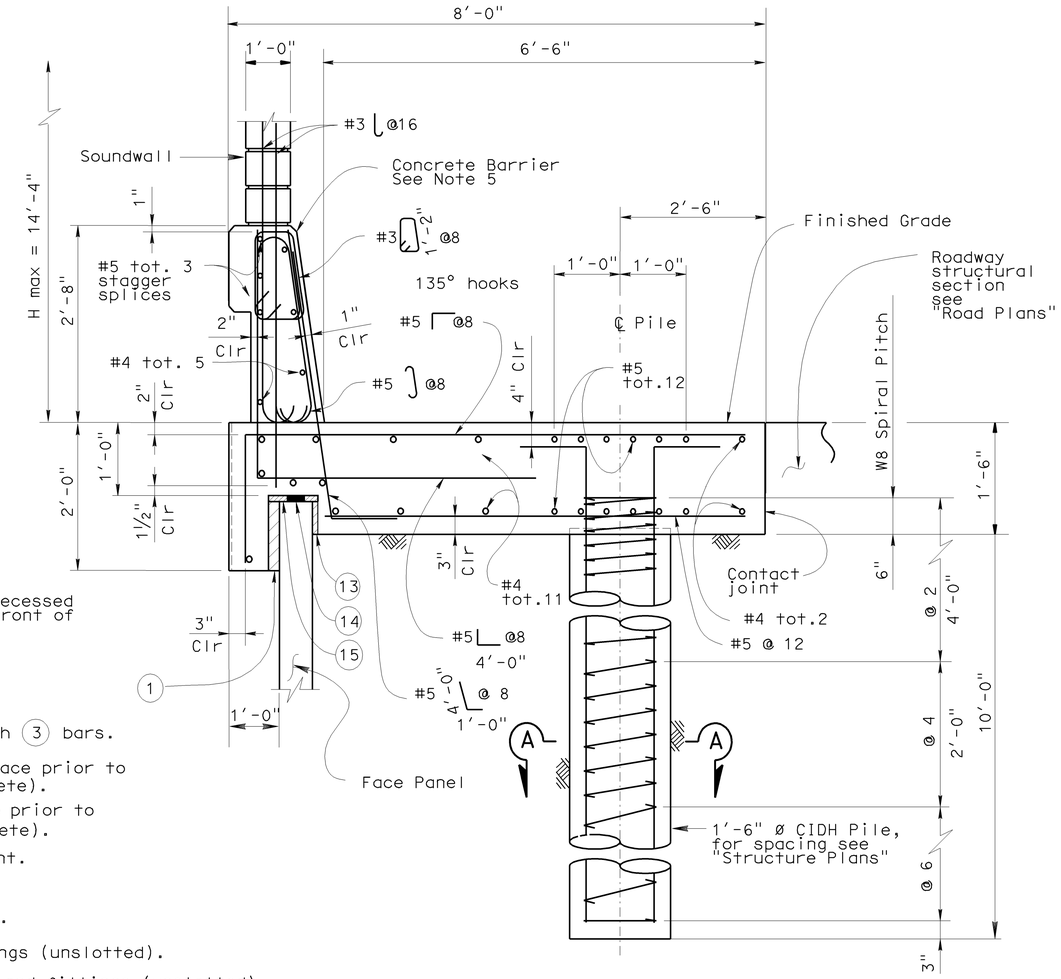

SECTION AT TOP OF WALL WITH SOUNDWALL AND CONCRETE BARRIER

STANDARD DRAWING					
FILE NO. xs13-020-5e	APPROVED BY K. GRISWELL (RESPONSIBLE TECHNICAL SPECIALIST)	RELEASED BY ROBERTO LACALLE (RESPONSIBLE OFFICE CHIEF)	STATE OF CALIFORNIA DEPARTMENT OF TRANSPORTATION	DIVISION OF ENGINEERING SERVICES	BRIDGE NO. / POST MILE
	APPROVAL DATE 5-6-08	RELEASE DATE 5-6-08			MECHANICALLY STABILIZED EMBANKMENT — DETAIL NO. 5

DS OSD 2147A (ENGLISH STANDARD DRAWING "XS" BORDER REV. 01/11/08)

ORIGINAL SCALE IN INCHES FOR REDUCED PLANS 0 1 2 3

CU EA

DISREGARD PRINTS BEARING EARLIER REVISION DATES

REVISION DATES (PRELIMINARY STAGE ONLY) SHEET OF

USERNAME => rwu

xs13-020-5e.dgn

DATE PLOTTED => 30-JUN-2008 TIME PLOTTED => 10:42