DIST.	COUNTY	ROUTE	POST MILES TOTAL PROJECT	SHEET NO.	TOTAL SHEETS

REGISTERED ENGINEER - CIVIL

PLANS APPROVAL DATE

REGISTERED PROFESSIONAL ENGINEER No. Exp. CIVIL STATE OF CALIFORNIA

The State of California or its officers or agents shall not be responsible for the accuracy or completeness of electronic copies of this plan sheet.

NOTES:
1. Anchorage enclosure shall only be used when anchor head assembly is not enclosed in concrete.
2. Anchorage enclosure shall have provisions to allow injecting grout at low end and venting at high end. Galvanize after fabrication.
3. Silicone sealant to cover full width of flange.
4. Steel tube welded to bearing plate (min thickness = 1/4 "). Galvanize assembly after fabrication
5. Steel tube welded to bearing plate inside diameter of steel tube to be 1" greater than outside diameter of smooth sheathing (min thickness = 1/4 ") Galvanize assembly after fabrication.
6. For other wall details, see elsewhere in structural plans.

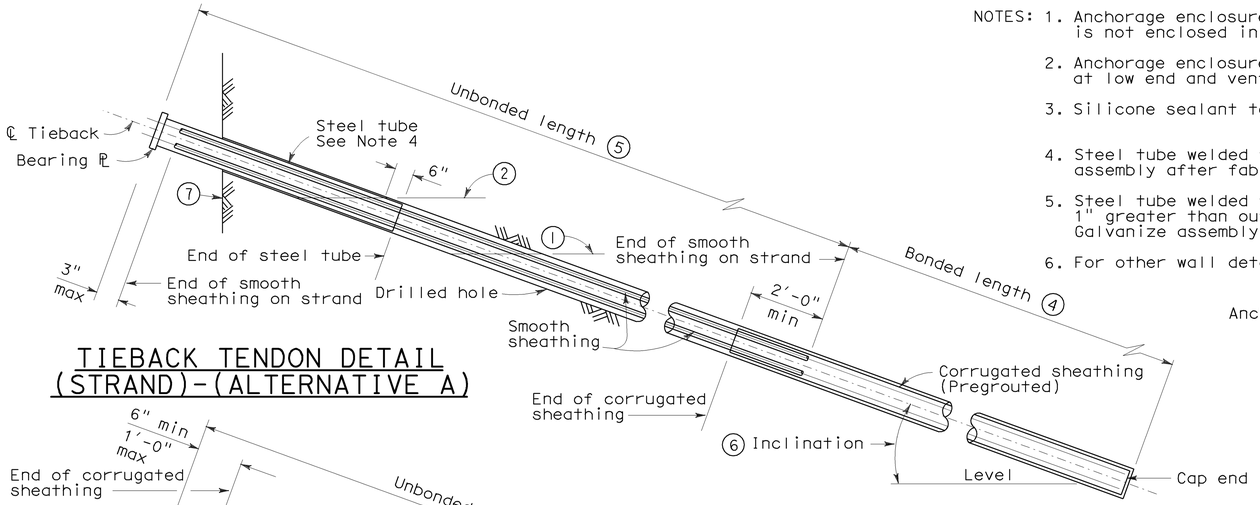

TIEBACK TENDON DETAIL (STRAND)-(ALTERNATIVE A)

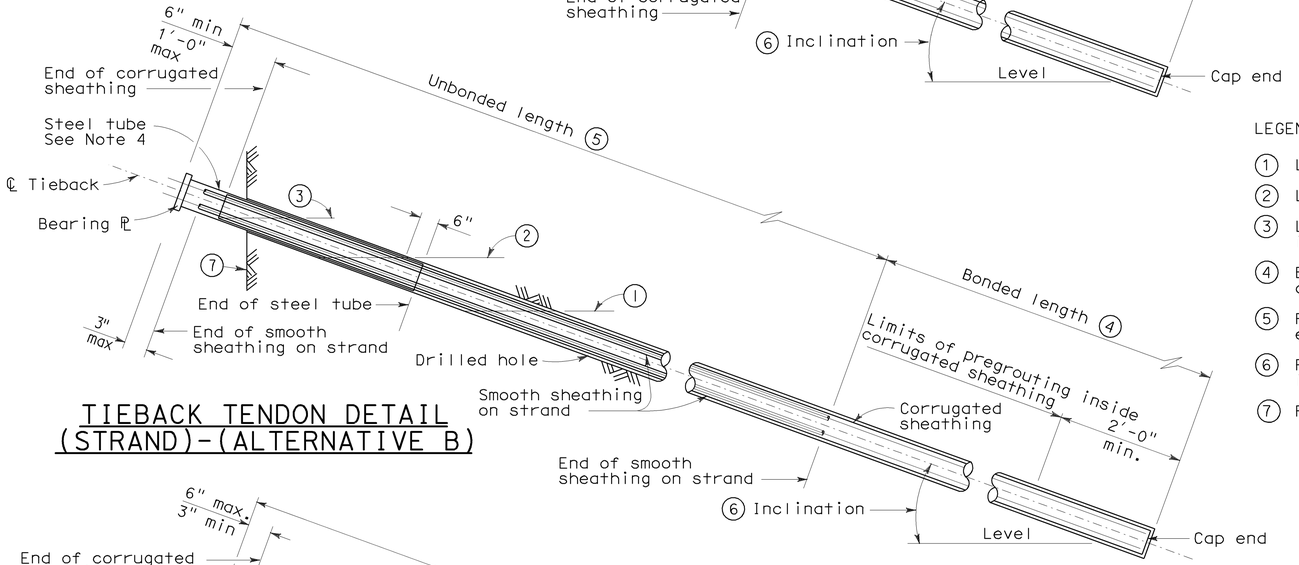

TIEBACK TENDON DETAIL (STRAND)-(ALTERNATIVE B)

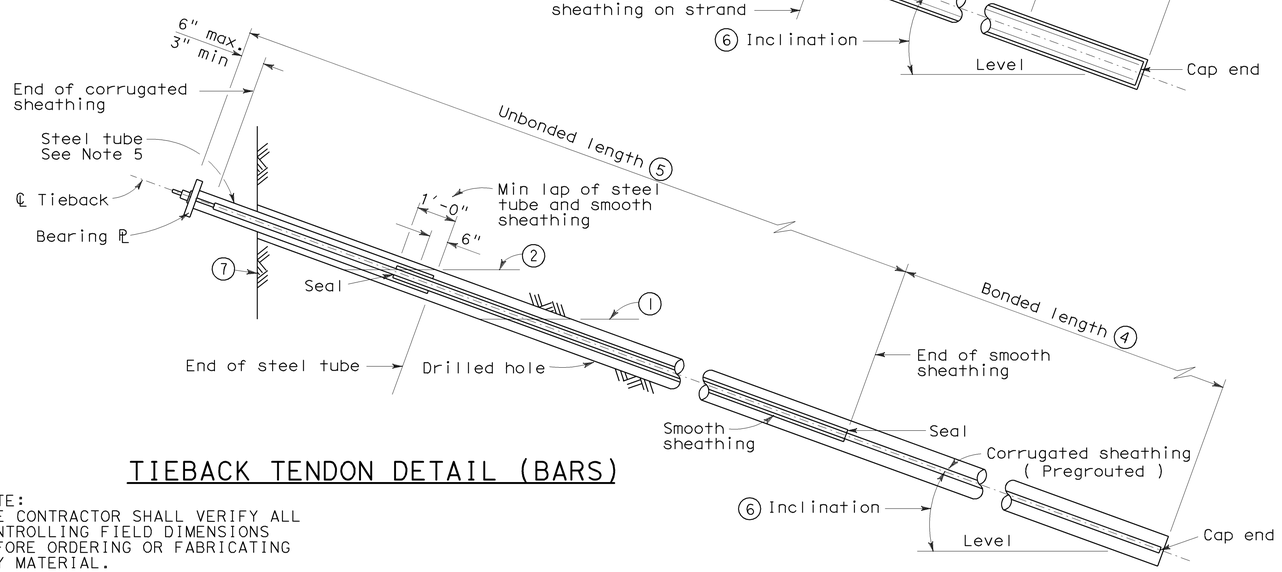

TIEBACK TENDON DETAIL (BARS)

NOTE:
THE CONTRACTOR SHALL VERIFY ALL CONTROLLING FIELD DIMENSIONS BEFORE ORDERING OR FABRICATING ANY MATERIAL.

LEGEND:

1. Level of initial grouting
2. Level of secondary grouting
3. Level of initial grouting inside corrugated sheathing
4. Bonded length shall be determined by the contractor
5. For unbonded length, see elsewhere in project plans
6. For inclination, see elsewhere in project plans
7. Face of Wall Excavation

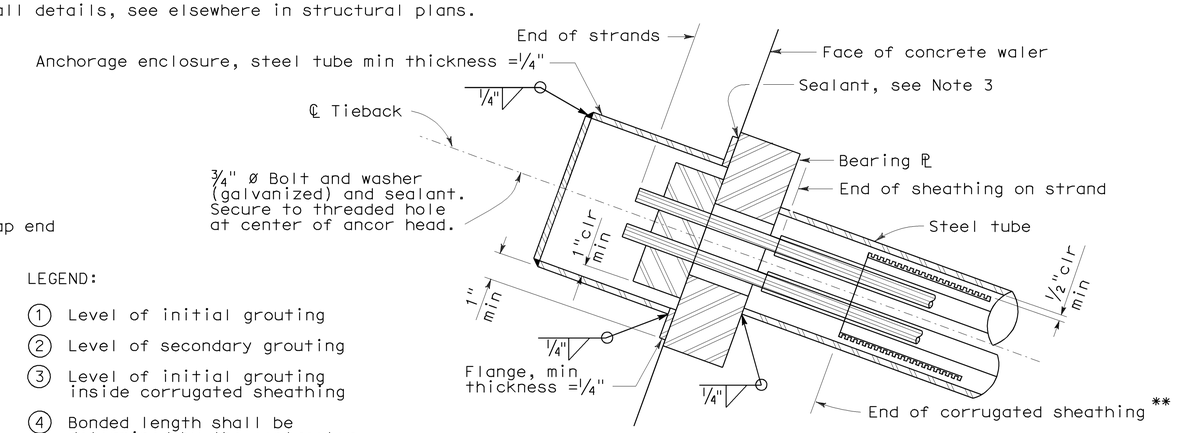

ALTERNATIVE X

** Alternative B tendon only

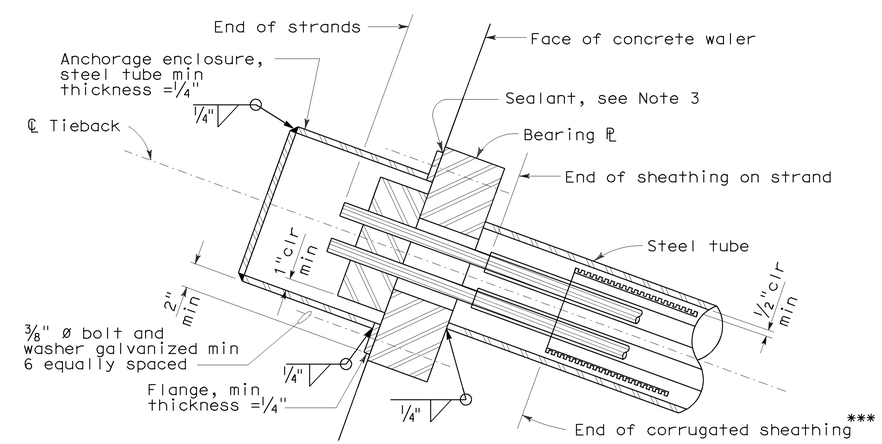

ALTERNATIVE Y

*** Alternative B tendon only

ANCHORAGE ENCLOSURE DETAILS

NO SCALE

ALL DIMENSIONS ARE IN MILLMETERS UNLESS OTHERWISE SHOWN

STANDARD DRAWING					
FILE NO. xs12-040e	APPROVED BY G. WANG (RESPONSIBLE TECHNICAL SPECIALIST)	RELEASED BY ROBERTO LACALLE (RESPONSIBLE OFFICE CHIEF)	STATE OF CALIFORNIA DEPARTMENT OF TRANSPORTATION	DIVISION OF ENGINEERING SERVICES	BRIDGE NO. / POST MILE
	APPROVAL DATE 6-20-08	RELEASE DATE 6-20-08			TIEBACK DETAILS

DS OSD 2147A (ENGLISH STANDARD DRAWING "XS" BORDER REV. 01/11/08)

ORIGINAL SCALE IN INCHES FOR REDUCED PLANS 0 1 2 3

CU EA

DISREGARD PRINTS BEARING EARLIER REVISION DATES

REVISION DATES (PRELIMINARY STAGE ONLY) SHEET OF

USERNAME => rwu

xs12-040e.dgn

DATE PLOTTED => 30-JUN-2008 TIME PLOTTED => 10:28