DIST	COUNTY	ROUTE	POST MILES TOTAL PROJECT	SHEET No.	TOTAL SHEETS
X	X	X	X	X	X

REGISTERED CIVIL ENGINEER X DATE

PLANS APPROVAL DATE

REGISTERED PROFESSIONAL ENGINEER X No. X Exp. X CIVIL STATE OF CALIFORNIA

The State of California or its officers or agents shall not be responsible for the accuracy or completeness of electronic copies of this plan sheet.

NOTES:

1. For deck plate plan see "DECK PLATE DETAILS NO 1" sheet for TYPE II joint.
2. Y may vary from 3/8" (Min) to 3/4" (Max) at the thickest end of the deck ℄ (td).
3. For td and Lp values see "CROSS SECTION" sheet for TYPE II joint.
4. Apply medium strength thread locker to threads. Space holes evenly. Eye bolts can be used at set screw locations for lifting of cover plates.
5. Standard holes may be replaced by slotted ones in the transverse direction.
6. The total thickness of the deck plate with the multilayer polymer concrete overlay must be equal to either 3" (MR=6.5"), or 3 3/4" (MR = 9.0"), or 5" (MR = 13.0").
7. Lp is calculated as Lp = (16", channel seat) + (seismic gap @ 70 °F) + (temperature drop) + (SEE opening) + 4".

CHANNEL ASSEMBLY "A" WIDTH	a (in)	

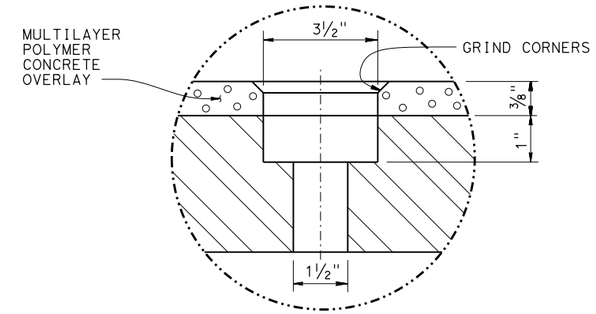

DETAIL L
NO SCALE

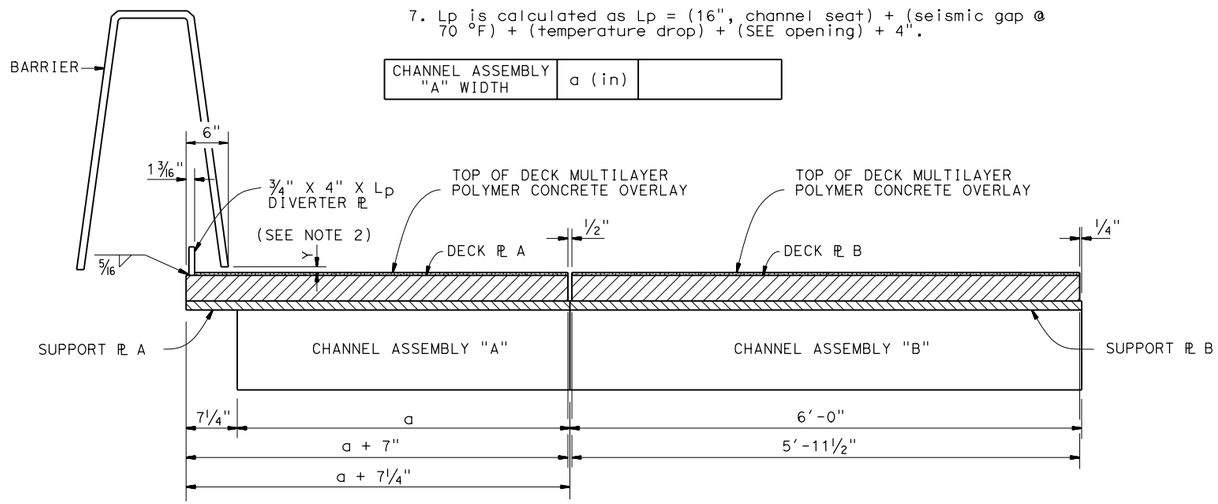

SECTION P-P
NO SCALE

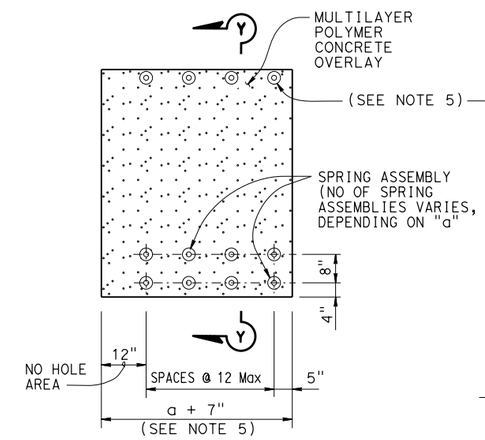

DECK PLATE A
NO SCALE

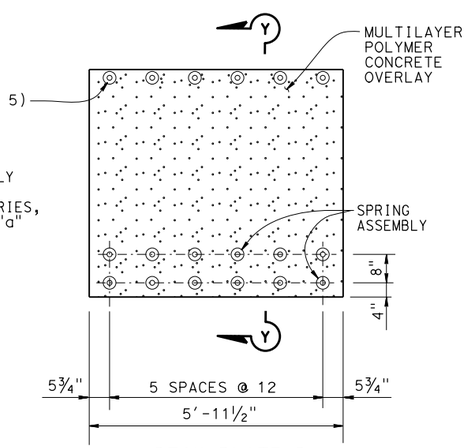

DECK PLATE B
NO SCALE

NOTE:

BARRIER NOT SHOWN FOR CLARITY

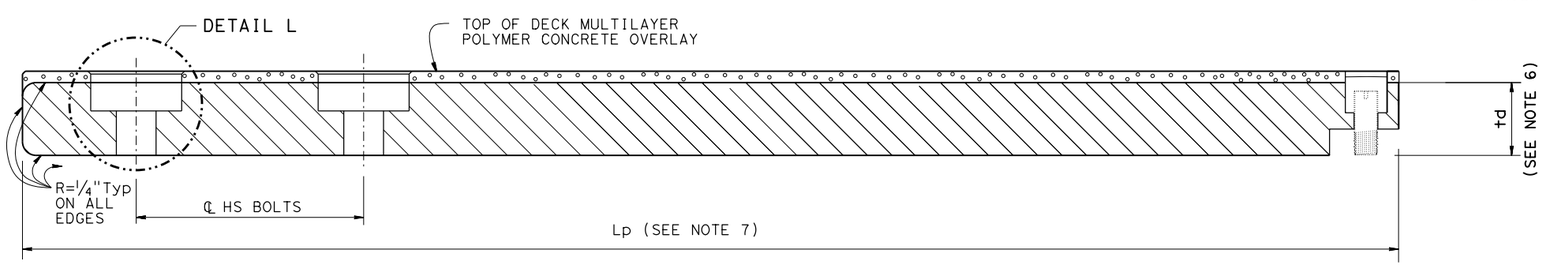

SECTION Y-Y
NO SCALE

STANDARD DRAWING

FILE NO. xs8-100-3

APPROVAL DATE October 2014

STATE OF CALIFORNIA DEPARTMENT OF TRANSPORTATION

DIVISION OF ENGINEERING SERVICES

BRIDGE NO. X

POST MILE X

X

SEISMIC JOINT TYPE II (HALF CHANNEL)
DECK PLATE DETAILS No. 2

DS OSD 2147A (ENGLISH STANDARD DRAWING "XS" BORDER REV. (02-02-11)

ORIGINAL SCALE IN INCHES FOR REDUCED PLANS 0 1 2 3

UNIT: X

PROJECT NUMBER & PHASE: X

CONTRACT NO.: X

DISREGARD PRINTS BEARING EARLIER REVISION DATES

REVISION DATES 9/26/14

SHEET 3 OF 8

FILE => xs8-100-3.dgn

USERNAME => s136236 DATE PLOTTED => 02-OCT-2014 TIME PLOTTED => 10:22