DIST	COUNTY	ROUTE	POST MILES TOTAL PROJECT	SHEET No.	TOTAL SHEETS
X	X	X	X	X	X

REGISTERED CIVIL ENGINEER X DATE

PLANS APPROVAL DATE

REGISTERED PROFESSIONAL ENGINEER X No. X Exp. X CIVIL STATE OF CALIFORNIA

The State of California or its officers or agents shall not be responsible for the accuracy or completeness of electronic copies of this plan sheet.

FOOTING DETAILS - FOR CULVERTS WITH FOOTINGS ON SOIL

SPAN, S		12′											
WALL HEIGHT, H		6′		8′		10′		12′		14′		15′	
Max Earth Cover		10′	20′	10′	20′	10′	20′	10′	20′	10′	20′	10′	20′
Depth - X		1′-9"	2′-0"	1′-9"	2′-0"	1′-9"	2′-0"	1′-9"	2′-0"	1′-9"	2′-0"	1′-9"	2′-0"
Width - Y		5′-0"	6′-0"	5′-0"	6′-0"	5′-0"	6′-0"	5′-0"	6′-0"	5′-0"	6′-0"	5′-0"	6′-0"
"f"	Bar size	#6	#6	#6	#6	#6	#6	#6	#6	#6	#6	#6	#6
	Bar Spacing	12"	12"	12"	12"	12"	12"	12"	12"	12"	12"	12"	12"
* Soil Pressure, qu (ksf)		5.17	7.93	5.39	8.17	5.84	8.53	6.35	9.03	7.05	9.75	7.43	10.11
Effective Footing Width, B′ (ft)		3.47	4.20	3.45	4.18	3.43	4.17	3.42	4.17	3.41	4.17	3.41	4.17

SPAN, S		14′											
WALL HEIGHT, H		6′		8′		10′		12′		14′		15′	
Max Earth Cover		10′	20′	10′	20′	10′	20′	10′	20′	10′	20′	10′	20′
Depth - X		1′-9′	2′-6"	2′-0"	2′-6"	2′-0"	2′-6"	2′-0"	2′-6"	2′-0"	2′-6"	2′-0"	2′-6"
Width - Y		5′-0"	6′-0"	5′-0"	6′-0"	5′-0"	6′-6"	5′-0"	6′-6"	5′-0"	6′-6"	5′-0"	7′-0"
"f"	Bar size	#6	#6	#6	#6	#6	#6	#6	#6	#6	#6	#6	#6
	Bar Spacing	12"	12"	12"	12"	12"	12"	12"	12"	12"	12"	12"	12"
* Soil Pressure, qu (ksf)		5.76	10.37	6.57	10.75	7.04	9.79	7.61	10.32	8.38	11.02	8.76	10.30
Effective Footing Width, B′ (ft)		3.48	3.71	3.20	3.69	3.19	4.17	3.17	4.16	3.16	4.16	3.16	4.66

SPAN, S		16′											
WALL HEIGHT, H		6′		8′		10′		12′		14′		15′	
Max Earth Cover		10′	20′	10′	20′	10′	20′	10′	20′	10′	20′	10′	20′
Depth - X		2′-0"	2′-6"	2′-0"	2′-6"	2′-0"	2′-6"	2′-0"	2′-6"	2′-0"	2′-6"	2′-0"	2′-6"
Width - Y		5′-6"	7′-0"	5′-6"	7′-0"	5′-6"	7′-0"	5′-6"	7′-0"	5′-6"	7′-0"	5′-6"	7′-0"
"f"	Bar size	#6	#6	#6	#6	#6	#6	#6	#6	#6	#6	#6	#6
	Bar Spacing	12"	12"	12"	12"	12"	12"	12"	12"	12"	12"	12"	12"
* Soil Pressure, qu (ksf)		6.13	9.25	6.41	9.41	6.73	9.73	7.30	10.29	7.87	10.95	8.32	11.30
Effective Footing Width, B′ (ft)		3.75	4.74	3.72	4.72	3.71	4.71	3.69	4.70	3.68	4.70	3.68	4.69

SPAN, S		18′											
WALL HEIGHT, H		6′		8′		10′		12′		14′		15′	
Max Earth Cover		10′	20′	10′	20′	10′	20′	10′	20′	10′	20′	10′	20′
Depth - X		2′-0"	2′-6"	2′-0"	2′-6"	2′-0"	2′-6"	2′-0"	2′-6"	2′-0"	2′-6"	2′-0"	2′-6"
Width - Y		5′-6"	7′-6"	5′-6"	7′-6"	5′-6"	7′-6"	5′-6"	8′-0"	5′-6"	8′-0"	5′-6"	8′-0"
"f"	Bar size	#6	#7	#6	#7	#5	#7	#5	#7	#5	#7	#5	#7
	Bar Spacing	12"	12"	12"	12"	12"	12"	12"	12"	12"	12"	12"	12"
* Soil Pressure, qu (ksf)		6.77	9.34	6.96	9.49	7.40	9.84	7.88	9.30	8.59	9.98	8.97	10.20
Effective Footing Width, B′ (ft)		3.76	5.27	3.74	5.25	3.72	5.24	3.71	5.73	3.70	5.73	3.70	5.72

SPAN, S		20′											
WALL HEIGHT, H		6′		8′		10′		12′		14′		15′	
Max Earth Cover		10′	20′	10′	20′	10′	20′	10′	20′	10′	20′	10′	20′
Depth - X		2′-6"	3′-0"	2′-6"	3′-0"	2′-6"	3′-0"	2′-6"	3′-0"	2′-6"	3′-0"	2′-6"	3′-0"
Width - Y		6′-0"	8′-0"	6′-0"	8′-0"	6′-0"	8′-0"	6′-0"	8′-6"	6′-0"	8′-6"	6′-0"	8′-6"
"f"	Bar size	#6	#7	#6	#7	#6	#7	#6	#7	#6	#7	#6	#7
	Bar Spacing	12"	12"	12"	12"	12"	12"	12"	12"	12"	12"	12"	12"
* Soil Pressure, qu (ksf)		7.58	10.46	7.79	10.76	8.13	11.01	8.76	10.48	9.45	10.99	9.88	11.29
Effective Footing Width, B′ (ft)		3.77	5.28	3.74	5.27	3.72	5.25	3.70	5.73	3.69	5.73	3.69	5.72

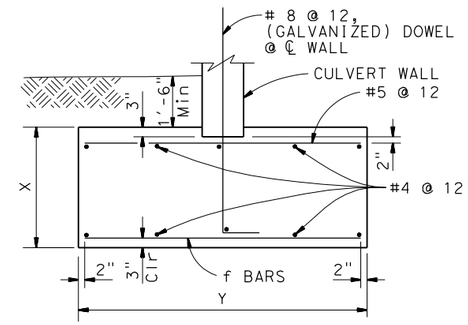

FOUNDATION - FOOTING

NO SCALE

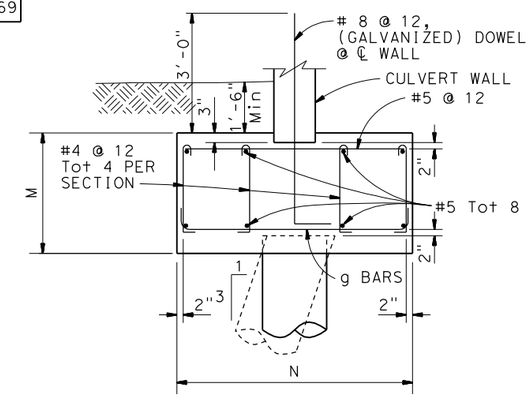

SINGLE PILE CAP SECTION X-X

NO SCALE

PILE & PILE CAP DETAILS - FOR CULVERTS WITH PILES OR FOOTINGS ON ROCK

SPAN, S		12′											
WALL HEIGHT, H		6′		8′		10′		12′		14′		15′	
Max Earth Cover		10′	20′	10′	20′	10′	20′	10′	20′	10′	20′	10′	20′
Number of Rows		1	2	1	2	2	2	2	2	2	2	2	2
Pile Spacing		12′-0"	12′-0"	7′-3"	8′-9"	9′-9"	6′-3"	7′-6"	4′-9"	5′-9"	3′-9"	5′-3"	3′-6"
Cap Depth - M		2′-6"	3′-0"	2′-6"	3′-0"	3′-0"	3′-0"	3′-0"	3′-0"	3′-0"	3′-0"	3′-0"	3′-0"
Cap Width - N		3′-0"	7′-6"	3′-0"	7′-6"	7′-6"	6′-0"	7′-6"	7′-6"	7′-6"	7′-6"	7′-6"	7′-6"
"g"	Bar size	#6	#7	#6	#7	#7	#7	#7	#7	#7	#7	#7	#7
	Bar Spacing	12"	6"	12"	6"	6"	6"	6"	6"	6"	6"	6"	6"

SPAN, S		14′											
WALL HEIGHT, H		6′		8′		10′		12′		14′		15′	
Max Earth Cover		10′	20′	10′	20′	10′	20′	10′	20′	10′	20′	10′	20′
Number of Rows		1	2	1	2	2	2	2	2	2	2	2	2
Pile Spacing		2′-6"	3′-0"	2′-6"	3′-0"	3′-0"	3′-0"	3′-0"	3′-0"	3′-0"	3′-0"	3′-0"	3′-0"
Cap Depth - M		2′-6"	3′-0"	2′-6"	3′-0"	3′-0"	3′-0"	3′-0"	3′-0"	3′-0"	3′-0"	3′-0"	3′-0"
Cap Width - N		3′-0"	7′-6"	3′-0"	7′-6"	7′-6"	7′-6"	7′-6"	7′-6"	7′-6"	7′-6"	7′-6"	7′-6"
"g"	Bar size	#6	#7	#6	#7	#7	#7	#7	#7	#7	#7	#7	#7
	Bar Spacing	12"	6"	12"	6"	6"	6"	6"	6"	6"	6"	6"	6"

SPAN, S		16′											
WALL HEIGHT, H		6′		8′		10′		12′		14′		15′	
Max Earth Cover		10′	20′	10′	20′	10′	20′	10′	20′	10′	20′	10′	20′
Number of Rows		1	2	1	2	2	2	2	2	2	2	2	2
Pile Spacing		12′-0"	12′-0"	8′-0"	9′-9"	10′-6"	7′-0"	7′-9"	5′-3"	6′-0"	4′-0"	5′-3"	3′-6"
Cap Depth - M		2′-6"	3′-0"	2′-6"	3′-0"	3′-0"	3′-0"	3′-0"	3′-0"	3′-0"	3′-0"	3′-0"	3′-0"
Cap Width - N		3′-6"	7′-6"	3′-6"	7′-6"	7′-6"	7′-6"	7′-6"	7′-6"	7′-6"	7′-6"	7′-6"	7′-6"
"g"	Bar size	#6	#7	#6	#7	#6	#7	#6	#7	#6	#7	#6	#7
	Bar Spacing	12"	6"	12"	6"	6"	6"	6"	6"	6"	6"	6"	6"

SPAN, S		18′											
WALL HEIGHT, H		6′		8′		10′		12′		14′		15′	
Max Earth Cover		10′	20′	10′	20′	10′	20′	10′	20′	10′	20′	10′	20′
Number of Rows		1	2	1	2	2	2	2	2	2	2	2	2
Pile Spacing		10′-9"	11′-0"	8′-3"	11′-0"	10′-6"	7′-0"	7′-6"	5′-3"	6′-0"	4′-0"	5′-3"	3′-6"
Cap Depth - M		3′-0"	3′-6"	3′-0"	3′-6"	3′-6"	3′-6"	3′-6"	3′-6"	3′-6"	3′-6"	3′-6"	3′-6"
Cap Width - N		4′-0"	7′-6"	4′-0"	7′-6"	7′-6"	7′-6"	7′-6"	7′-6"	7′-6"	7′-6"	7′-6"	7′-6"
"g"	Bar size	#6	#6	#6	#7	#7	#7	#7	#7	#7	#7	#7	#7
	Bar Spacing	12"	6"	12"	6"	6"	6"	6"	6"	6"	6"	6"	6"

SPAN, S		20′											
WALL HEIGHT, H		6′		8′		10′		12′		14′		15′	
Max Earth Cover		10′	20′	10′	20′	10′	20′	10′	20′	10′	20′	10′	20′
Number of Rows		1	2	1	2	2	2	2	2	2	2	2	2
Pile Spacing		9′-9"	10′-0"	8′-6"	9′-6"	10′-6"	7′-9"	7′-6"	5′-6"	6′-0"	4′-3"	5′-3"	3′-9"
Cap Depth - M		3′-0"	3′-6"	3′-0"	3′-6"	3′-6"	3′-6"	3′-6"	3′-6"	3′-6"	3′-6"	3′-6"	3′-6"
Cap Width - N		4′-0"	7′-6"	4′-0"	7′-6"	7′-6"	7′-6"	7′-6"	7′-6"	7′-6"	7′-6"	7′-6"	7′-6"
"g"	Bar size	#6	#7	#6	#7	#7	#7	#7	#7	#7	#7	#7	#7
	Bar Spacing	12"	6"	12"	6"	6"	6"	6"	6"	6"	6"	6"	6"

* - See Note 2

Piles: Class 200 piles

Concrete: f′c = 4000 psi (for piles)
f′c = 3600 psi (footings)
fy = 60,000 psi

NOTES:

1. Refer Sheet-4, for pile layout
2. Soil pressure shown in the table is equivalent uniform pressure per AASHTO LRFD

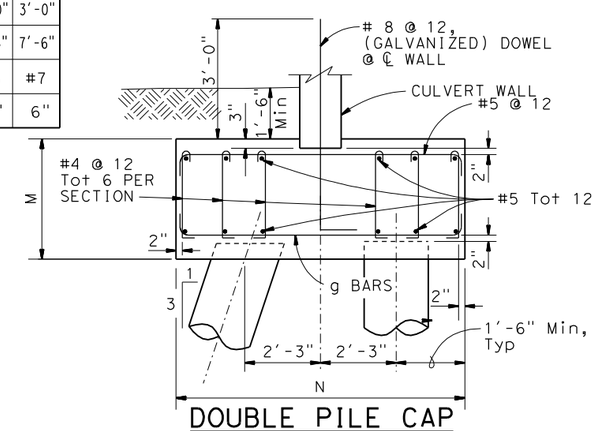

DOUBLE PILE CAP SECTION Y-Y

NO SCALE

STANDARD DRAWING

FILE NO. xs17-050-3

APPROVAL DATE November 2011

DS OSD 2147A (ENGLISH STANDARD DRAWING "XS" BORDER REV. (02-02-11)

ORIGINAL SCALE IN INCHES FOR REDUCED PLANS 0 1 2 3

STATE OF CALIFORNIA DEPARTMENT OF TRANSPORTATION

DIVISION OF ENGINEERING SERVICES

BRIDGE NO. X

POST MILE X

X

CIP BOTTOMLESS CULVERT FOUNDATION DETAILS

UNIT: X
PROJECT NUMBER & PHASE: X
CONTRACT NO.: X

DISREGARD PRINTS BEARING EARLIER REVISION DATES

REVISION DATES

SHEET X OF X

FILE => $REQUEST

USERNAME => $USER DATE PLOTTED => $DATE TIME PLOTTED => $TIME