| DIST | COUNTY | ROUTE | POST MILES TOTAL PROJECT | SHEET No. | TOTAL SHEETS |
|---|---|---|---|---|---|
| X | X | X | X | X | X |

REGISTERED CIVIL ENGINEER X DATE

PLANS APPROVAL DATE

REGISTERED PROFESSIONAL ENGINEER X NO. X EXP. X CIVIL STATE OF CALIFORNIA

*The State of California or its officers or agents shall not be responsible for the accuracy or completeness of electronic copies of this plan sheet.*

| SPAN, S | | | 12′ | | | | | | | | | | | |
|---|---|---|---|---|---|---|---|---|---|---|---|---|---|---|
| WALL HEIGHT, H | | | 6′ | | 8′ | | 10′ | | 12′ | | 14′ | | 15′ | |
| Max Earth Cover | | | 10′ | 20′ | 10′ | 20′ | 10′ | 20′ | 10′ | 20′ | 10′ | 20′ | 10′ | 20′ |
| Concrete | Roof T1 | | 11" | 1′-2" | 1′-0" | 1′-3" | 1′-3" | 1′-5" | 1′-6" | 1′-8" | 2′-1" | 2′-1" | 2′-3" | 2′-3" |
| Concrete | Walls T2 | | 11" | 1′-2" | 1′-0" | 1′-3" | 1′-3" | 1′-5" | 1′-6" | 1′-8" | 1′-9" | 2′-0" | 1′-11" | 2′-2" |
| Reinforcement | Spacing | | 12" | 10" | 12" | 9" | 12" | 9" | 11" | 9" | 10" | 9" | 9" | 8" |
| Reinforcement | "a" | Bar size | #8 | #8 | #8 | #8 | #8 | #8 | #8 | #8 | #8 | #8 | #8 | #8 |
| Reinforcement | "b" | Bar size | #6 | #6 | #6 | #6 | #7 | #6 | #9 | #8 | #10 | 10 | #10 | #10 |
| Reinforcement | "b" | *Bw - Cut-off Length | Full Height | | | | | | | | | | | |
| Reinforcement | "c" | Bar size | #6 | #6 | #6 | #6 | #6 | #6 | #7 | #7 | #7 | #7 | #7 | #7 |
| Reinforcement | "c" | C - Cut-off Length | 2′-0" | 2′-0" | 2′-0" | 2′-0" | 2′-0" | 2′-6" | 2′-6" | 2′-9" | 2′-6" | 3′-0" | 2′-6" | 3′-3" |
| Reinforcement | "d" | Bar size | #6 | #6 | #6 | #6 | #6 | #6 | #7 | #7 | #8 | #8 | #8 | #8 |
| Reinforcement | "e" | Bar size | #4 | #4 | #4 | #4 | #4 | #4 | #4 | #4 | #4 | #4 | #4 | #4 |
| Quantities | Concrete CF/LF | | 24.7 | 31.7 | 31.0 | 39.1 | 44.1 | 50.3 | 59.5 | 66.6 | 82.3 | 90.3 | 94.1 | 102.8 |
| Quantities | Reinf lb/LF | | 220 | 264 | 252 | 328 | 307 | 374 | 484 | 547 | 694 | 773 | 807 | 912 |

| SPAN, S | | | 14′ | | | | | | | | | | | |
|---|---|---|---|---|---|---|---|---|---|---|---|---|---|---|
| WALL HEIGHT, H | | | 6′ | | 8′ | | 10′ | | 12′ | | 14′ | | 15′ | |
| Max Earth Cover | | | 10′ | 20′ | 10′ | 20′ | 10′ | 20′ | 10′ | 20′ | 10′ | 20′ | 10′ | 20′ |
| Concrete | Roof T1 | | 11" | 1′-3" | 1′-1" | 1′-4" | 1′-3" | 1′-5" | 1′-6" | 1′-8" | 1′-10" | 2′-0" | 1′-11" | 2′-4" |
| Concrete | Walls T2 | | 11" | 1′-2" | 1′-0" | 1′-4" | 1′-3" | 1′-5" | 1′-6" | 1′-8" | 1′-10" | 2′-0" | 2′-0" | 2′-3" |
| Reinforcement | Spacing | | 10" | 9" | 10" | 8" | 10" | 8" | 10" | 8" | 10" | 8" | 9" | 8" |
| Reinforcement | "a" | Bar size | #8 | #8 | #8 | #8 | #8 | #8 | #8 | #8 | #8 | #8 | #8 | #8 |
| Reinforcement | "b" | Bar size | #6 | #7 | #6 | #6 | #6 | #7 | #8 | #8 | #10 | #8 | #10 | #9 |
| Reinforcement | "b" | *Bw - Cut-off Length | Full Height | | | | | | | | | | | |
| Reinforcement | "c" | Bar size | #6 | #7 | #6 | #7 | #6 | #7 | #7 | #7 | #8 | #8 | #8 | #8 |
| Reinforcement | "c" | C - Cut-off Length | 2′-0" | 2′-6" | 2′-0" | 2′-6" | 2′-0" | 3′-0" | 2′-6" | 3′-3" | 2′-9" | 4′-6" | 3′-0" | 4′-6" |
| Reinforcement | "d" | Bar size | #6 | #6 | #6 | #6 | #6 | #6 | #7 | #7 | #8 | #8 | #8 | #8 |
| Reinforcement | "e" | Bar size | #4 | #4 | #4 | #4 | #4 | #4 | #4 | #4 | #4 | #4 | #4 | #4 |
| Quantities | Concrete CF/LF | | 26.5 | 35.4 | 34.3 | 44.6 | 46.6 | 53.2 | 62.5 | 69.9 | 84.7 | 93.0 | 95.5 | 106.6 |
| Quantities | Reinf lb/LF | | 275 | 312 | 313 | 411 | 354 | 467 | 512 | 638 | 743 | 819 | 863 | 921 |

| SPAN, S | | | 16′ | | | | | | | | | | | |
|---|---|---|---|---|---|---|---|---|---|---|---|---|---|---|
| WALL HEIGHT, H | | | 6′ | | 8′ | | 10′ | | 12′ | | 14′ | | 15′ | |
| Max Earth Cover | | | 10′ | 20′ | 10′ | 20′ | 10′ | 20′ | 10′ | 20′ | 10′ | 20′ | 10′ | 20′ |
| Concrete | Roof T1 | | 1′-2" | 1′-4" | 1′-3" | 1′-5" | 1′-4" | 1′-6" | 1′-7" | 1′-9" | 1′-10" | 2′-0" | 2′-0" | 2′-2" |
| Concrete | Walls T2 | | 11" | 1′-3" | 1′-1" | 1′-3" | 1′-3" | 1′-5" | 1′-7" | 1′-9" | 1′-10" | 2′-1" | 2′-1" | 2′-3" |
| Reinforcement | Spacing | | 10" | 9" | 10" | 9" | 10" | 8" | 10" | 8" | 10" | 8" | 10" | 8" |
| Reinforcement | "a" | Bar size | #8 | #9 | #8 | #9 | #8 | #9 | #8 | #9 | #8 | #9 | #8 | #9 |
| Reinforcement | "b" | Bar size | #6 | #8 | #6 | #8 | #6 | #8 | #7 | #8 | #9 | #8 | #9 | #9 |
| Reinforcement | "b" | *Bw - Cut-off Length | Full Height | | | | | | | | | | | |
| Reinforcement | "c" | Bar size | #6 | #8 | #6 | #8 | #6 | #8 | #7 | #8 | #8 | #8 | #8 | #8 |
| Reinforcement | "c" | C - Cut-off Length | 2′-0" | 2′-0" | 2′-0" | 2′-0" | 2′-0" | 3′-3" | 2′-6" | 3′-6" | 2′-9" | 3′-9" | 3′-0" | 4′-0" |
| Reinforcement | "d" | Bar size | #6 | #6 | #6 | #6 | #6 | #6 | #7 | #7 | #8 | #8 | #8 | #8 |
| Reinforcement | "e" | Bar size | #4 | #4 | #4 | #4 | #4 | #4 | #4 | #4 | #4 | #4 | #4 | #4 |
| Quantities | Concrete CF/LF | | 32.8 | 40.7 | 41.0 | 47.2 | 50.7 | 57.6 | 69.3 | 77.1 | 88.4 | 99.7 | 103.8 | 112.9 |
| Quantities | Reinf lb/LF | | 298 | 448 | 336 | 499 | 374 | 618 | 504 | 745 | 715 | 885 | 833 | 990 |

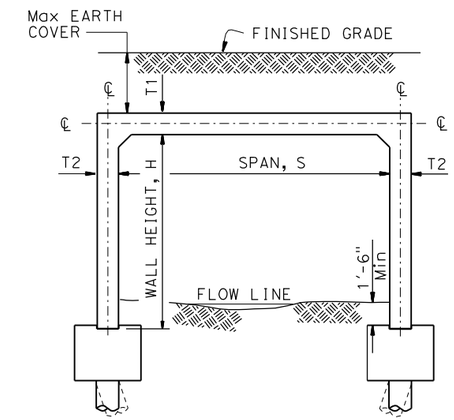


## BOTTOMLESS CULVERT

CAST-IN-PLACE (CIP)
No Scale

| SPAN, S | | | 18′ | | | | | | | | | | | |
|---|---|---|---|---|---|---|---|---|---|---|---|---|---|---|
| WALL HEIGHT, H | | | 6′ | | 8′ | | 10′ | | 12′ | | 14′ | | 15′ | |
| Max Earth Cover | | | 10′ | 20′ | 10′ | 20′ | 10′ | 20′ | 10′ | 20′ | 10′ | 20′ | 10′ | 20′ |
| Concrete | Roof T1 | | 1′-4" | 1′-6" | 1′-4" | 1′-7" | 1′-5" | 1′-8" | 1′-7" | 1′-9" | 1′-11" | 2′-1" | 2′-1" | 2′-3" |
| Concrete | Walls T2 | | 11" | 1′-3" | 1′-0" | 1′-3" | 1′-4" | 1′-6" | 1′-7" | 1′-8" | 1′-9" | 2′-2" | 2′-1" | 2′-4" |
| Reinforcement | Spacing | | 11" | 9" | 11" | 9" | 11" | 8" | 11" | 8" | 11" | 8" | 11" | 8" |
| Reinforcement | "a" | Bar size | #8 | #9 | #8 | #9 | #8 | #9 | #8 | #9 | #8 | #9 | #8 | #9 |
| Reinforcement | "b" | Bar size | #7 | #8 | #7 | #8 | #7 | #8 | #7 | #8 | #8 | #8 | #9 | #9 |
| Reinforcement | "b" | *Bw - Cut-off Length | Full Height | | | | | | | | | | | |
| Reinforcement | "c" | Bar size | #7 | #7 | #7 | #8 | #7 | #7 | #7 | #8 | #7 | #7 | #8 | #8 |
| Reinforcement | "c" | C - Cut-off Length | 2′-0" | 3′-0" | 2′-0" | 3′-3" | 2′-0" | 3′-6" | 2′-6" | 3′-9" | 3′-9" | 4′-3" | 4′-3" | 4′-3" |
| Reinforcement | "d" | Bar size | #6 | #6 | #6 | #6 | #6 | #6 | #7 | #7 | #8 | #8 | #8 | #8 |
| Reinforcement | "e" | Bar size | #4 | #4 | #4 | #4 | #4 | #4 | #4 | #4 | #4 | #4 | #4 | #4 |
| Quantities | Concrete CF/LF | | 38.4 | 46.8 | 43.7 | 53.5 | 56.9 | 66.0 | 72.5 | 78.3 | 96.5 | 108.2 | 109.7 | 119.1 |
| Quantities | Reinf lb/LF | | 325 | 469 | 394 | 568 | 438 | 639 | 516 | 743 | 653 | 827 | 760 | 1028 |

| SPAN, S | | | 20′ | | | | | | | | | | | |
|---|---|---|---|---|---|---|---|---|---|---|---|---|---|---|
| WALL HEIGHT, H | | | 6′ | | 8′ | | 10′ | | 12′ | | 14′ | | 15′ | |
| Max Earth Cover | | | 10′ | 20′ | 10′ | 20′ | 10′ | 20′ | 10′ | 20′ | 10′ | 20′ | 10′ | 20′ |
| Concrete | Roof T1 | | 1′-6" | 1′-8" | 1′-6" | 1′-9" | 1′-7" | 1′-10" | 1′-9" | 2′-2" | 2′-0" | 2′-2" | 2′-1" | 2′-4" |
| Concrete | Walls T2 | | 11" | 1′-4" | 1′-0" | 1′-6" | 1′-2" | 1′-7" | 1′-7" | 1′-9" | 1′-11" | 2′-2" | 2′-2" | 2′-4" |
| Reinforcement | Spacing | | 11" | 9" | 11" | 8" | 11" | 8" | 11" | 8" | 11" | 8" | 11" | 8" |
| Reinforcement | "a" | Bar size | #8 | #9 | #8 | #9 | #8 | #9 | #8 | #9 | #8 | #9 | #8 | #9 |
| Reinforcement | "b" | Bar size | #7 | #8 | #8 | #8 | #8 | #8 | #8 | #8 | #8 | #8 | #9 | #9 |
| Reinforcement | "b" | *Bw - Cut-off Length | Full Height | | | | | | | | | | | |
| Reinforcement | "c" | Bar size | #7 | #8 | #7 | #7 | #7 | #7 | #7 | #7 | #7 | #7 | #8 | #8 |
| Reinforcement | "c" | C - Cut-off Length | 2′-0" | 3′-6" | 2′-0" | 3′-9" | 2′-0" | 4′-0" | 2′-6" | 4′-3" | 3′-0" | 4′-6" | 3′-6" | 4′-6" |
| Reinforcement | "d" | Bar size | #6 | #6 | #6 | #6 | #6 | #6 | #7 | #7 | #8 | #8 | #8 | #8 |
| Reinforcement | "e" | Bar size | #4 | #4 | #4 | #4 | #4 | #4 | #4 | #4 | #4 | #4 | #4 | #4 |
| Quantities | Concrete CF/LF | | 44.8 | 54.8 | 50.0 | 65.3 | 60.0 | 75.1 | 79.5 | 93.9 | 102.3 | 114.4 | 116.7 | 122.8 |
| Quantities | Reinf lb/LF | | 346 | 583 | 446 | 622 | 490 | 679 | 574 | 791 | 675 | 922 | 783 | 1069 |

* U shape bars vertical legs may be spliced per Standard Specifications.

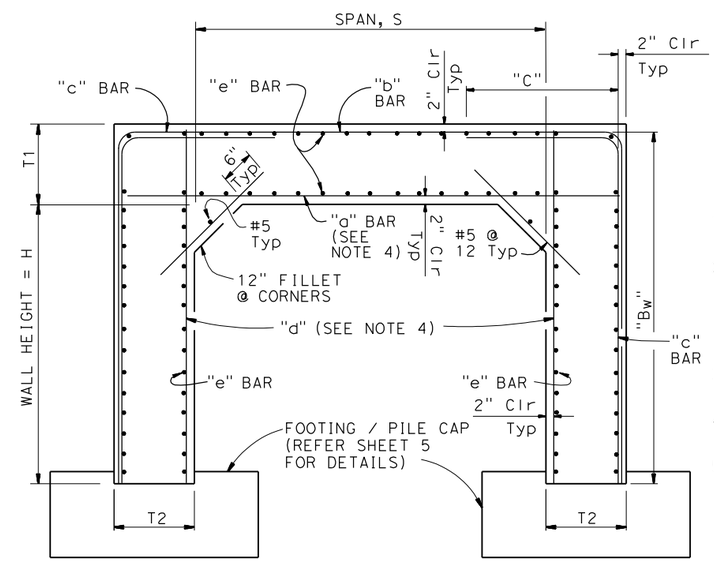


NOTES:

1. Culverts are defined as having spans of less than 20′ (AASHTO)
2. For boxes of height less than that shown in table, use next greater table height slab, wall dimensions, and reinforcing steel. Make necessary changes in bar lengths, number of spacers, and quantities
3. Shear reinforcement shall be provided as required
4. The "a" and "d" bars are at half spacings
5. Refer to Sheet 5 for foundation details

## TYPICAL REINFORCEMENT

No Scale

STANDARD DRAWING

FILE NO. xs17-040

APPROVAL DATE November 2011

DS OSD 2147A (ENGLISH STANDARD DRAWING "XS" BORDER REV. (02-02-11)

ORIGINAL SCALE IN INCHES FOR REDUCED PLANS 0 1 2 3

STATE OF CALIFORNIA DEPARTMENT OF TRANSPORTATION

DIVISION OF ENGINEERING SERVICES

BRIDGE NO. X

POST MILE X

X

# CIP BOTTOMLESS CULVERT FOUNDATION PILES/FOOTINGS ON SOIL

UNIT: X
PROJECT NUMBER & PHASE: X
CONTRACT NO.: X

DISREGARD PRINTS BEARING EARLIER REVISION DATES

REVISION DATES

SHEET X OF X

FILE => $REQUEST

USERNAME => $USER DATE PLOTTED => $DATE TIME PLOTTED => $TIME